makita®

Cordless Driver Drill

6204D

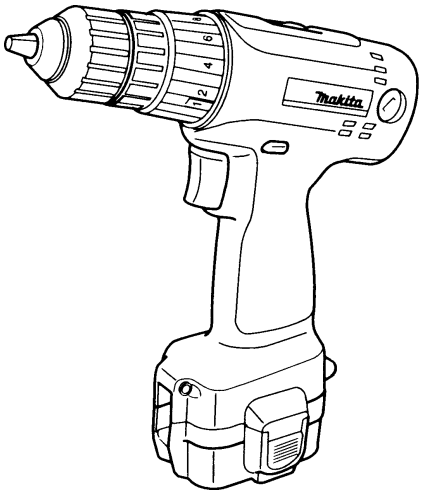

SPECIFICATIONS

Model	**6204D**
Capacities	
Steel	10 mm
Wood	21 mm
Wood screw	6.1 mm x 55 mm
Tool screw	6 mm
No load speed (min^{-1})	
High	0 – 1,100
Low	0 – 350
Overall length	197 mm
Net weight	1.5 kg
Rated voltage	D.C.9.6 V

- Due to our continuing program of research and development, the specifications herein are subject to change without notice.
- Note: Specifications may differ from country to country.

For European countries only

Noise and Vibration

The typical A-weighted sound pressure level is not more than 70 dB (A).
The noise level under working may exceed 85 dB (A).
– Wear ear protection. –
The typical weighted root mean square acceleration value is not more than 2.5 m/s^2.

EC-DECLARATION OF CONFORMITY

The undersigned, Yasuhiko Kanzaki, authorized by Makita Corporation, 3-11-8 Sumiyoshi-Cho, Anjo, Aichi 446-8502 Japan declares that this product
(Serial No. : series production)
manufactured by Makita Corporation in Japan is in compliance with the following standards or standardized documents,
EN50260, EN55014
in accordance with Council Directives, 89/336/EEC and 98/37/EC.

Yasuhiko Kanzaki **CE 98**

Director

MAKITA INTERNATIONAL EUROPE LTD.
Michigan Drive, Tongwell, Milton Keynes,
Bucks MK15 8JD, ENGLAND

EC-DECLARATION OF CONFORMITY

The undersigned, Yasuhiko Kanzaki, authorized by Kao Lung Tamura Electronics Co., Ltd. No. 4 Industry 1st Street, Ping Tung Industry District Chiao Nan Li, Ping Tung City, Taiwan declares that this battery charger
(Serial No. : series production)
manufactured by Kao Lung Tamura Electronics Co., Ltd. in Taiwan is in compliance with the following standards or standardized documents,
EN60335, EN55014, EN61000
in accordance with Council Directives, 73/23/EEC and 89/336/EEC.

Yasuhiko Kanzaki **CE 94**

Director

MAKITA INTERNATIONAL EUROPE LTD.
Michigan Drive, Tongwell, Milton Keynes,
Bucks MK15 8JD, ENGLAND

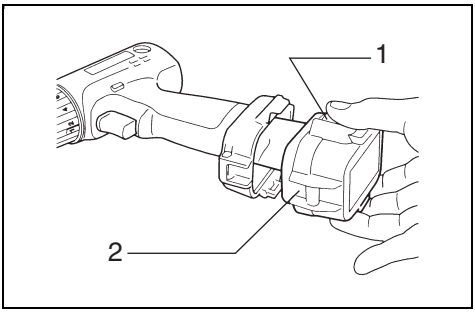

1

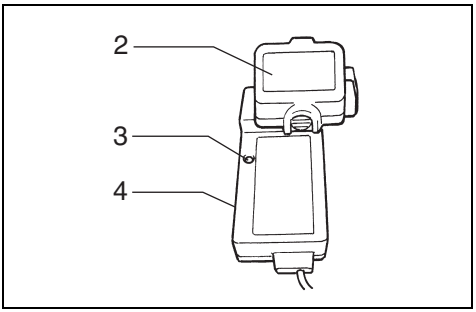

2

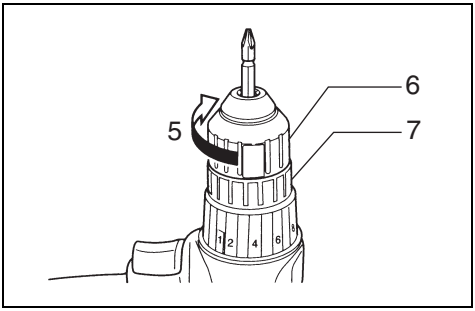

3

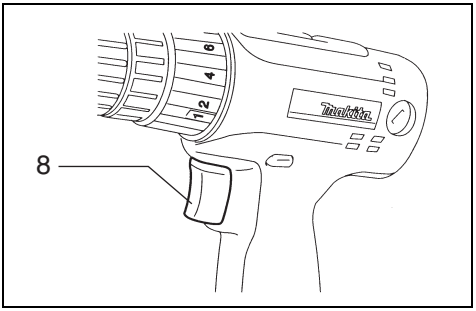

4

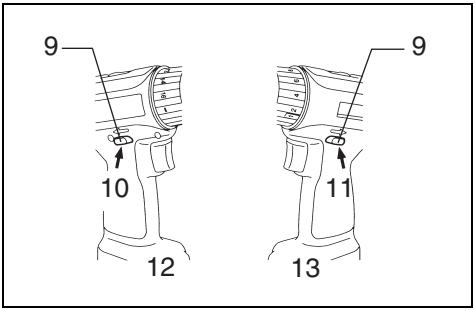

5

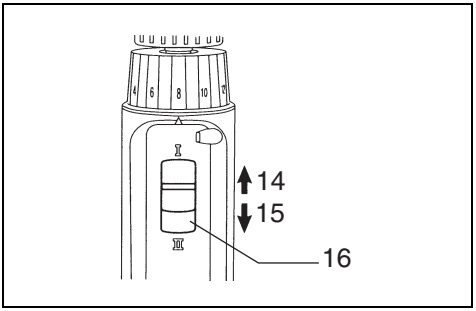

6

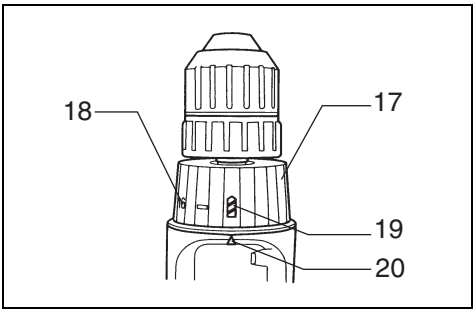

7

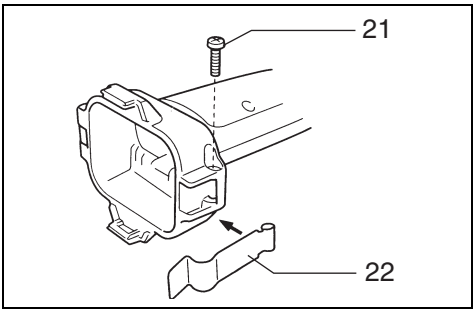

8

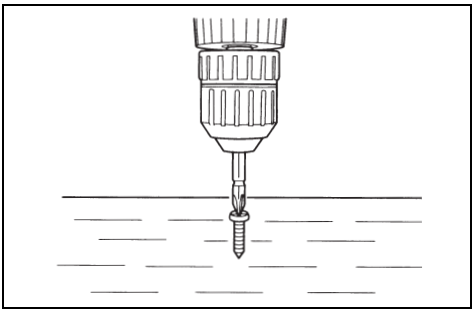

9

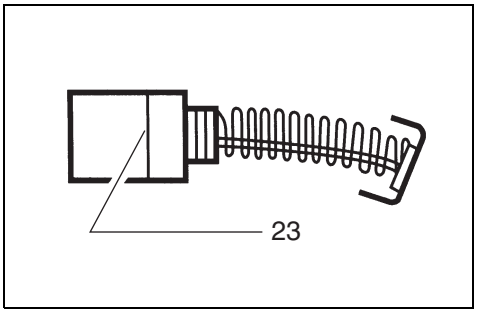

10

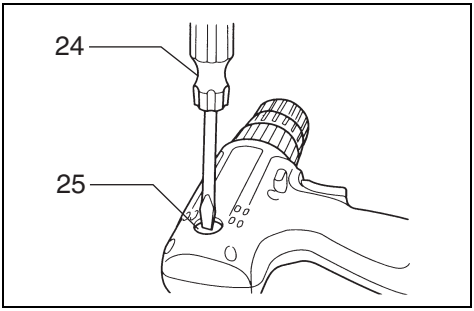

11

Symbols
The following show the symbols used for the tool. Be sure that you understand their meaning before use.

- ❏ Indoor use only
- ❏ Read instruction manual.
- ❏ DOUBLE INSULATION
- ❏ Ready to charge
- ❏ Charging
- ❏ Charging complete
- ❏ Delay charge (too hot battery)
- ❏ Deffective battery
- ❏ Delay charge (too hot battery)
- ❏ Always recycle batteries.
- ❏ Do not discard batteries into garbage can or the like.

Note:
The recycling method may differ from country to country, or state (province) to state (province). Consult with your nearest Makita Authorized Service Center or Distributor.

Explanation of general view

1 Button
2 Battery cartridge
3 Charging light
4 Fast charger
5 Tighten
6 Sleeve
7 Ring
8 Switch trigger
9 Reversing switch lever
10 A side
11 B side
12 Clockwise
13 Counterclockwise
14 Low speed
15 High speed
16 Speed change lever
17 Adjusting ring
18 Graduations
19 Drill marking
20 Pointer
21 Screw
22 Set plate
23 Limit mark
24 Screwdriver
25 Brush holder cap

SAFETY INSTRUCTIONS

WARNING! When using battery operated tools basic safety precautions, including the following, should be followed to reduce the risk of fire, leaking batteries and personal injury: Read these instructions before operating this product and save these instructions.

For safe operation:

1. **Keep work area clean**
   – Cluttered areas and benches invite injuries.
2. **Consider the work environment.**
   – Do not expose the tool to rain. Keep work area well lit. Do not use tools in the presence of flammable liquids or gases.
3. **Keep children away**
   – Do not let visitors touch the tool. Keep visitors away from work area.
4. **Store batteries or idle tools**
   – When not in use, tools and batteries should be stored separately in a dry, high or locked up place, out of reach of children.
   – Ensure that battery terminals cannot be shorted by other metal parts such as screws, nails, etc.
5. **Do not force the tool**
   – It will do the job better and safer at the rate for which it was intended.
6. **Use the right tool**
   – Do not force small tools or attachments to do the job of a heavy duty tools. Do not use tools for purposes not intended.
7. **Dress properly**
   – Do not wear loose clothing or jewellery, they can be caught in moving parts. Non-skid footwear is recommended when working outdoors. Wear protecting hair covering to contain long hair.
8. **Use protective equipment**
   – Use safety glasses and if the cutting operation is dusty, a face or dust mask.
9. **Connect dust extraction equipment**
   – If devices are provided for the connection of dust extraction and collection ensure these are connected and properly used.
10. **Do not abuse the supply cord (if fitted)**
    – Never carry the tool by the cord or yank it to disconnect from the socket. Keep the cord away from heat, oil and sharp edges.
11. **Secure the work**
    – Use clamps or a vice to hold the work. It is safer than using your hand and it frees both hands to operate the tool.
12. **Do not over-reach**
    – Keep proper footing and balance at all times.
13. **Maintain tools with care**
    – Keep cutting tools sharp and clean for better and safer performance. Follow instructions for lubrication and changing accessories. Inspect tool cords periodically and if damaged have repaired by an authorized service facility.
14. **Disconnect tools**
    – Where the design permits, disconnect the tool from its battery pack when not in use, before servicing and when changing accessories such as blades, bits and cutters.
15. **Remove adjusting keys and wrenches**
    – Form the habit of checking to see that keys and adjusting wrenches are removed from the tool before turning it on.
16. **Avoid unintentional starting**
    – Do not carry the tool with a finger on the switch.
17. **Stay alert**
    – Watch what you are doing. Use common sense. Do not operate the tool when you are tired.
18. **Check damaged parts**
    – Before further use of the tool, a guard or other part that is damaged should be carefully checked to determine that it will operate properly and perform its intended function. Check for alignment of moving parts, free running of moving parts, breakage of parts, mounting and any other condition that may affect its operation. A guard or other part that is damaged should be properly repaired or replaced by an authorized service facility unless otherwise indicated in this instruction manual. Have defective switches replaced by an authorized service facility. Do not use the tool if the switch does not turn it on and off.
19. **Warning**
    – The use of any accessory or attachment, other than recommended in this instruction manual, may present a risk of personal injury.
    – Ensure that the battery pack is correct for the tool.
    – Ensure that the outside surface of battery pack or tool is clean and dry before plugging into charger.
    – Ensure that batteries are charged using the correct charger recommended by the manufacturer. Incorrect use may result in a risk of electric shock, overheating or leakage of corrosive liquid from the battery.
20. **Have your tool repaired by a qualified person**
    – This tool is constructed in accordance with the relevant safety requirements. Repairs should only be carried out by qualified persons using original spare parts, otherwise this may result in considerable danger to the user.

21. **Disposal of battery**
   – Ensure battery is disposed of safety as instructed by the manufacturer.

IMPORTANT SAFETY INSTRUCTIONS FOR CHARGER & BATTERY CARTRIDGE

ENC001-3

1. **SAVE THESE INSTRUCTIONS — This manual contains important safety and operating instructions for battery charger.**
2. **Before using battery charger, read all instructions and cautionary markings on (1) battery charger, (2) battery, and (3) product using battery.**
3. **CAUTION — To reduce risk of injury, charge only MAKITA type rechargeable batteries. Other types of batteries may burst causing personal injury and damage.**
4. **Do not expose charger to rain or snow.**
5. **Use of an attachment not recommended or sold by the battery charger manufacturer may result in a risk of fire, electric shock, or injury to persons.**
6. **To reduce risk of damage to electric plug and cord, pull by plug rather than cord when disconnecting charger.**
7. **Make sure cord is located so that it will not be stepped on, tripped over, or otherwise subjected to damage or stress.**
8. **Do not operate charger with damaged cord or plug — replace them immediately.**
9. **Do not operate charger if it has received a sharp blow, been dropped, or otherwise damaged in any way; take it to a qualified serviceman.**
10. **Do not disassemble charger or battery cartridge; take it to a qualified serviceman when service or repair is required. Incorrect reassembly may result in a risk of electric shock or fire.**
11. **To reduce risk of electric shock, unplug charger from outlet before attempting any maintenance or cleaning. Turning off controls will not reduce this risk.**
12. **The battery charger is not intended for use by young children or infirm persons without supervision.**
13. **Young children should be supervised to ensure that they do not play with the battery charger.**
14. **If operating time has become excessively shorter, stop operating immediately. It may result in a risk of overheating, possible burns and even an explosion.**
15. **If electrolyte gets into your eyes, rinse them out with clear water and seek medical attention right away. It may result in loss of your eyesight.**

ADDITIONAL SAFETY RULES FOR CHARGER & BATTERY CARTRIDGE

1. **Do not charge Battery Cartridge when temperature is BELOW 10°C (50°F) or ABOVE 40°C (104°F).**
2. **Do not attempt to use a step-up transformer, an engine generator or DC power receptacle.**
3. **Do not allow anything to cover or clog the charger vents.**
4. **Always cover the battery terminals with the battery cover when the battery cartridge is not used.**
5. **Do not short the battery cartridge:**
   (1) Do not touch the terminals with any conductive material.
   (2) Avoid storing battery cartridge in a container with other metal objects such as nails, coins, etc.
   (3) Do not expose battery cartridge to water or rain.
   A battery short can cause a large current flow, overheating, possible burns and even a breakdown.
6. **Do not store the tool and battery cartridge in locations where the temperature may reach or exceed 50°C (122°F).**
7. **Do not incinerate the battery cartridge even if it is severely damaged or is completely worn out. The battery cartridge can explode in a fire.**
8. **Be careful not to drop, shake or strike battery.**
9. **Do not charge inside a box or container of any kind. The battery must be placed in a well ventilated area during charging.**

ADDITIONAL SAFETY RULES FOR TOOL

ENB022-1

1. **Be aware that this tool is always in an operating condition, because it does not have to be plugged into an electrical outlet.**
2. **Hold tool by insulated gripping surfaces when performing an operation where the cutting tool may contact hidden wiring. Contact with a "live" wire will also make exposed metal parts of the tool "live" and shock the operator.**
3. **Always be sure you have a firm footing.**
4. **Be sure no one is below when using the tool in high locations.**
5. **Hole the tool firmly.**
6. **Keep hands away from rotating parts.**
7. **Do not leave the tool running. Operate the tool only when hand-held.**
8. **Do not touch the drill bit or the workpiece immediately after operation; they may be extremely hot and could burn your skin.**

SAVE THESE INSTRUCTIONS.

OPERATING INSTRUCTIONS

Installing or removing battery cartridge (Fig. 1)

- Always switch off the tool before insertion or removal of the battery cartridge.
- To remove the battery cartridge, withdraw it from the tool while pressing the buttons on both sides of the cartridge.
- To insert the battery cartridge, align the tongue on the battery cartridge with the groove in the housing and slip it into place. Always insert it all the way until it locks in place with a little click. If not, it may accidentally fall out of the tool, causing injury to you or someone around you.
- Do not use force when inserting the battery cartridge. If the cartridge does not slide in easily, it is not being inserted correctly.

Charging (Fig. 2)

Plug the fast charger into the proper AC voltage source. The charging light will flash in green color. Insert the battery cartridge so that the plus and minus terminals on the battery cartridge are on the same sides as their respective markings on the fast charger. Insert the cartridge fully into the port so that it rests on the charger port floor. When the battery cartridge is inserted, the charging light color will change from green to red and charging will begin. The charging light will remain lit steadily during charging. When charging is completed, the charging light color will change from red to green.

After charging, unplug the charger from the power source. Refer to the table below for the charging time.

Battery type	Capacity (mAh)	Number of cells	Charging time
9100	1,300	8	Approx. 30 min.
9102, 9102A, 9122	2,000	8	Approx. 45 min.
9133	2,200	8	Approx. 50 min.
9134	2,600	8	Approx. 60 min.
9135	3,000	8	Approx. 70 min.

CAUTION:

- The fast charger is for charging Makita bettery cartrige. Never use it for other purposes or for other manufactor's batteries.
- When you charge a new battery cartridge or a battery cartridge which has not been used for a long period of time, it may not accept a full charge. This is a normal condition and does not indicate a problem. You can recharge the battery cartridge fully after discharging it completely and recharging a couple of times.
- If you charge a battery cartridge from a just-operated tool or a battery cartridge which has been left in a location exposed to direct sunlight or heat for a long time, the charging light may flash in red color. If this occurs, wait for a while. Charging will begin after the battery cartridge cools. The battery cartridge will cool faster if you remove the battery cartridge from the fast charger.
- If the charging light flashes alternately in green and red color, a problem exists and charging is not possible. The terminals on the charger or battery cartridge are clogged with dust or the battery cartridge is worn out or damaged.
- If you wish to charge two battery cartridges, allow 15 minutes between chargings on the fast charger.

Trickle charge (Maintenance charge)

If you leave the battery cartridge in the charger to prevent spontaneous discharging after full charge, the charger will switch into its "trickle charge (maintenance charge)" mode and keep the battery cartridge fresh and fully charged.

Tips for maintaining maximum battery life

1. Charge the battery cartridge before completely discharged. Always stop tool operation and charge the battery cartridge when you notice less tool power.
2. Never recharge a fully charged battery cartridge. Overcharging shortens the battery service life.
3. Charge the battery cartridge with room temperature at 10°C – 40°C (50°F – 104°F).
   Let a hot battery cartridge cool down before charging it.
4. Charge the Nickel Metal Hydride battery cartridge when you do not use it for more than six months.

Installing or removing driver bit or drill bit (Fig. 3)

Important:

Always be sure that the tool is switched off and the battery cartridge is removed before installing or removing the bit.

Hold the ring and turn the sleeve counterclockwise to open the chuck jaws. Place the bit in the chuck as far as it will go. Hold the ring firmly and turn the sleeve clockwise to tighten the chuck.

To remove the bit, hold the ring and turn the sleeve counterclockwise.

Switch action (Fig. 4)

CAUTION:

Before inserting the battery cartridge into the tool, always check to see that the switch trigger actuates properly and returns to the "OFF" position when released.

To start the tool, simply pull the trigger. Tool speed is increased by increasing pressure on the trigger. Release the trigger to stop.

Reversing switch action (Fig. 5)

CAUTION:

- Always check the direction of rotation before operation.
- Use the reversing switch only after the tool comes to a complete stop. Changing the direction of rotation before the tool stops may damage the tool.
- When not operating the tool, always set the reversing switch lever to the neutral position.

This tool has a reversing switch to change the direction of rotation. Depress the reversing switch lever from the A side for clockwise rotation or from the B side for counterclockwise rotation. When the switch lever is in the neutral position, the switch trigger cannot be pulled.

Speed change (Fig. 6)

To change the speed, first switch off the tool and then slide the speed change lever to the " II " side for high speed or " I " side for low speed. Be sure that the speed change lever is set to the correct position before operation. Use the right speed for your job.

CAUTION:

- Always set the speed change lever fully to the correct position. If you operate the tool with the speed change lever positioned half-way between the " I " side and " II " side, the tool may be damaged.
- Do not use the speed change lever while the tool is running. The tool may be damaged.

Adjusting the fastening torque (Fig. 7)

The fastening torque can be adjusted in 17 steps by turning the adjusting ring so that its graduations are aligned with the pointer on the tool body. The fastening torque is minimum when the number 1 is aligned with the pointer, and maximum when the marking is aligned with the pointer.

The clutch will slip at various torque levels when set at the number 1 to 16. The clutch is designed not to slip at the marking.

Before actual operation, drive a trial screw into your material or a piece of duplicate material to determine which torque level is required for a particular application.

NOTE:

Do not operate the tool with the adjusting ring set between the number 16 and the marking. The tool may be damaged.

Installing set plate (Fig. 8)

Always install the set plate when using battery cartridges 9100, 9102 or 9102A. Install the set plate on the tool with the screw provided as shown in **Fig. 8**.

Screwdriving operation (Fig. 9)

Place the point of the driver bit in the screw head and apply pressure to the tool. Start the tool slowly and then increase the speed gradually. Release the trigger as soon as the clutch cuts in.

NOTE:

- Make sure that the driver bit is inserted straight in the screw head, or the screw and/or bit may be damaged.
- When driving wood screws, predrill pilot holes to make driving easier and to prevent splitting of the workpiece. See the chart below.

Nominal diameter of wood screw (mm)	Recommended size of pilot hole (mm)
3.1	2.0 – 2.2
3.5	2.2 – 2.5
3.8	2.5 – 2.8
4.5	2.9 – 3.2
4.8	3.1 – 3.4
5.1	3.3 – 3.6
5.5	3.6 – 3.9
5.8	4.0 – 4.2
6.1	4.2 – 4.4

- If the tool is operated continuously until the battery cartridge has discharged, allow the tool to rest for 15 minutes before proceeding with a fresh battery.

Drilling operation

First, turn the adjusting ring so that the pointer on the tool body points to the marking. Then proceed as follows.

- Drilling in wood
  When drilling in wood, best results are obtained with wood drills equipped with a guide screw. The guide screw makes drilling easier by pulling the bit into the workpiece.
- Drilling in metal
  To prevent the bit from slipping when starting a hole, make an indentation with a centerpunch and hammer at the point to be drilled. Place the point of the bit in the indentation and start drilling. Use a cutting lubricant when drilling metals. The exceptions are iron and brass which should be drilled dry.

CAUTION:

- Pressing excessively on the tool will not speed up the drilling. In fact, this excessive pressure will only serve to damage the tip of your bit, decrease the tool performance and shorten the service life of the tool.
- There is a tremendous force exerted on the tool/bit at the time of hole breakthrough. Hold the tool firmly and exert care when the bit begins to break through the workpiece.
- A stuck bit can be removed simply by setting the reversing switch to reverse rotation in order to back out. However, the tool may back out abruptly if you do not hold it firmly.
- Always secure small workpieces in a vise or similar hold-down device.
- If the tool is operated continuously until the battery cartridge has discharged, allow the tool to rest for 15 minutes before proceeding with a fresh battery.

MAINTENANCE

CAUTION:

Always be sure that the tool is switched off and the battery cartridge is removed before carrying out any work on the tool.

Replacement of carbon brushes (Fig. 10 & 11)

Replace carbon brushes when they are worn down to the limit mark. Both identical carbon brushes should be replaced at the same time.

To maintain product safety and reliability, repairs, maintenance or adjustment should be carried out by a Makita Authorized Service Center.

ACCESSORIES

CAUTION:
These accessories or attachments are recommended for use with your Makita tool specified in this manual. The use of any other accessories or attachments might present a risk of injury to persons. The accessories or attachments should be used only in the proper and intended manner.

- Phillips bit

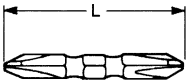

Bit No.	L (mm)				
No. 1	65				
No. 2	45	65	110	150	250
No. 3	45	65	110		

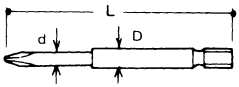

Bit No.	L (mm)	D (mm)	d (mm)
No. 2	82	6	5

Note :
- Use bit No. 1 when fastening machine screws M3, or wood screws 2.1 mm – 2.7 mm.
- Use bit No. 2 when fastening machine screws M4 – M5, or wood screws 3.1 mm – 4.8 mm.
- Use bit No. 3 when fastening machine screws M6 – M8, or wood screws 5.1 mm – 6.1 mm.

- Slotted Bit

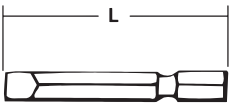

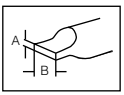

A (mm)	B (mm)	L (mm)
0.6	5	45
0.8		82
	6	70
1.0	6.35	45
1.2	8	70

- Socket bit

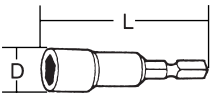

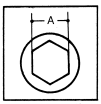

Bolt size	A (mm)	L (mm)	D (mm)
M4	7	55	11
M5	8		12.5
M6	10		15

- Rubber pad assembly

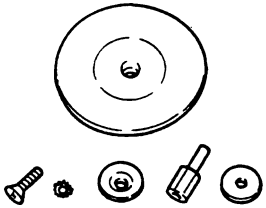

- Foam polishing pad 125

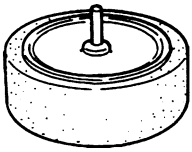

- Wool bonnet 100

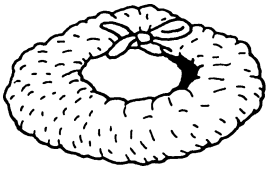

- Battery cartridge 9122/9133/9134/9135

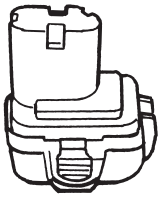

- Battery cartridge 9102A

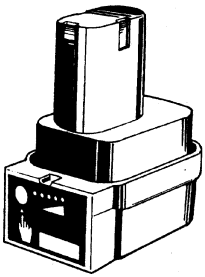

- Battery cover

- Battery changer DC1413

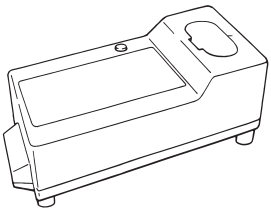

- Set plate

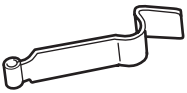

- Plastic carrying case

Makita Corporation
Anjo, Aichi, Japan
Made in Japan
884179-229