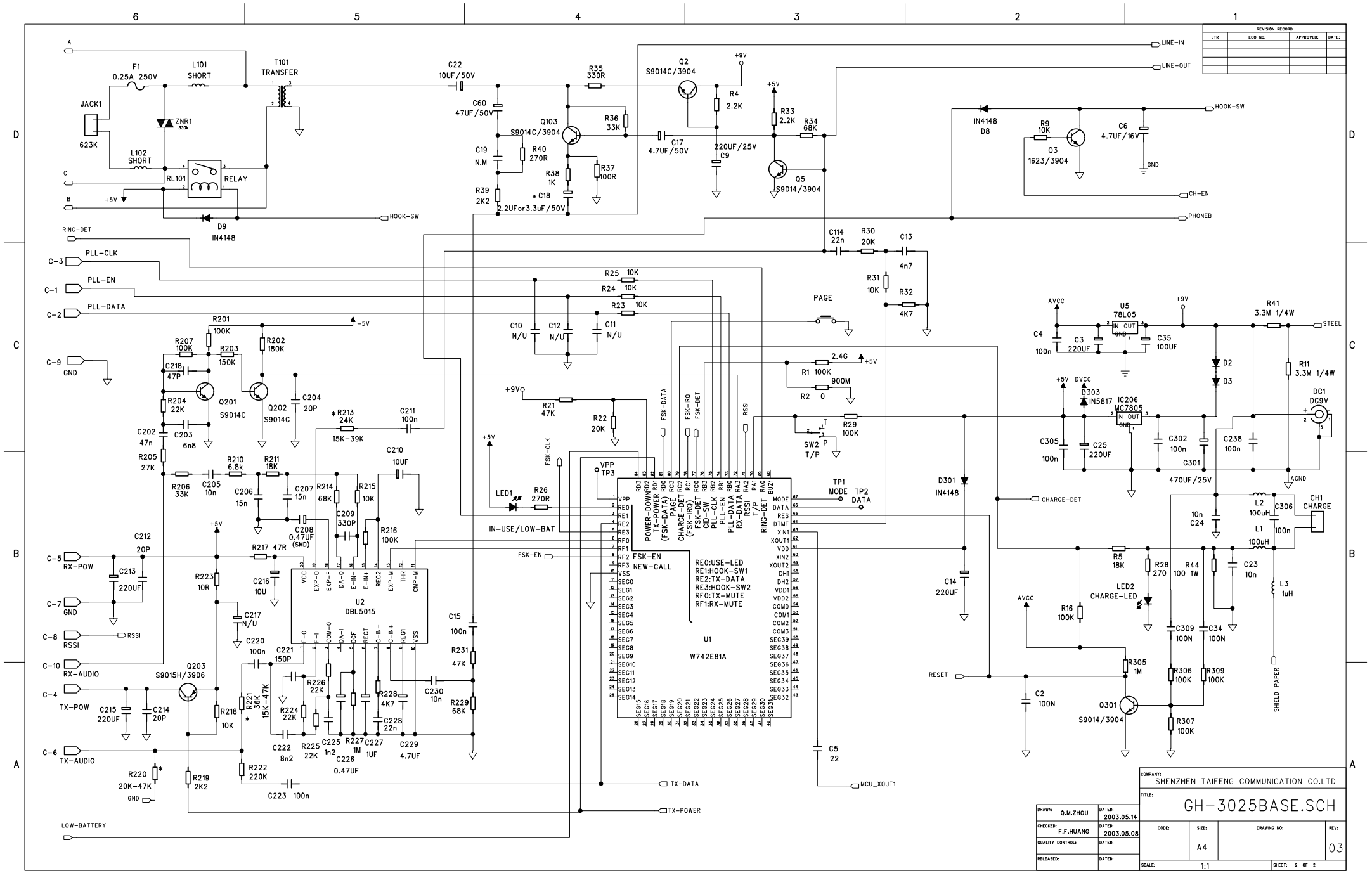
REVISION RECORD
LTR
ECO NO:
APPROVED:
DATE:
LINE-IN
LINE-OUT
HOOK-SW
CH-EN
PHONEB
RING-DET
PLL-CLK
PLL-EN
PLL-DATA
GND
RSSI
RX-POW
RX-AUDIO
TX-POW
TX-AUDIO
LOW-BATTERY
TX-DATA
TX-POWER
MCU_XOUT1
CHARGE-DET
STEEL
SHIELD_PAPER
RESET
PAGE
IN-USE/LOW-BAT
FSK-EN
FSK-CLK
FSK-DATA
FSK-IRQ
FSK-DET
U1
W742E81A
RE0:USE-LED
RE1:HOOK-SW1
RE2:TX-DATA
RE3:HOOK-SW2
RF0:TX-MUTE
RF1:RX-MUTE
U2
DBL5015
U5
78L05
IC206
MC7805
DC1
DC9V
CH1
CHARGE
LED1
LED2
CHARGE-LED
Q201
S9014C
Q202
S9014C
Q203
S9015H/3906
Q301
S9014/3904
Q3
1623/3904
Q5
S9014/3904
Q2
S9014C/3904
Q103
S9014C/3904
JACK1
623K
F1
0.25A 250V
L101
SHORT
L102
SHORT
T101
TRANSFER
RL101
RELAY
ZNR1
330k
D9
IN4148
D8
IN4148
D301
IN4148
D303
IN5817
TP1
MODE
TP2
DATA
TP3
VPP
SW2
T/P
COMPANY:
SHENZHEN TAIFENG COMMUNICATION CO.LTD
TITLE:
GH-3025BASE.SCH
DRAWN:
Q.M.ZHOU
DATED:
2003.05.14
CHECKED:
F.F.HUANG
DATED:
2003.05.08
QUALITY CONTROL:
DATED:
RELEASED:
DATED:
CODE:
SIZE:
A4
DRAWING NO:
REV:
03
SCALE:
1:1
SHEET: 2 OF 2

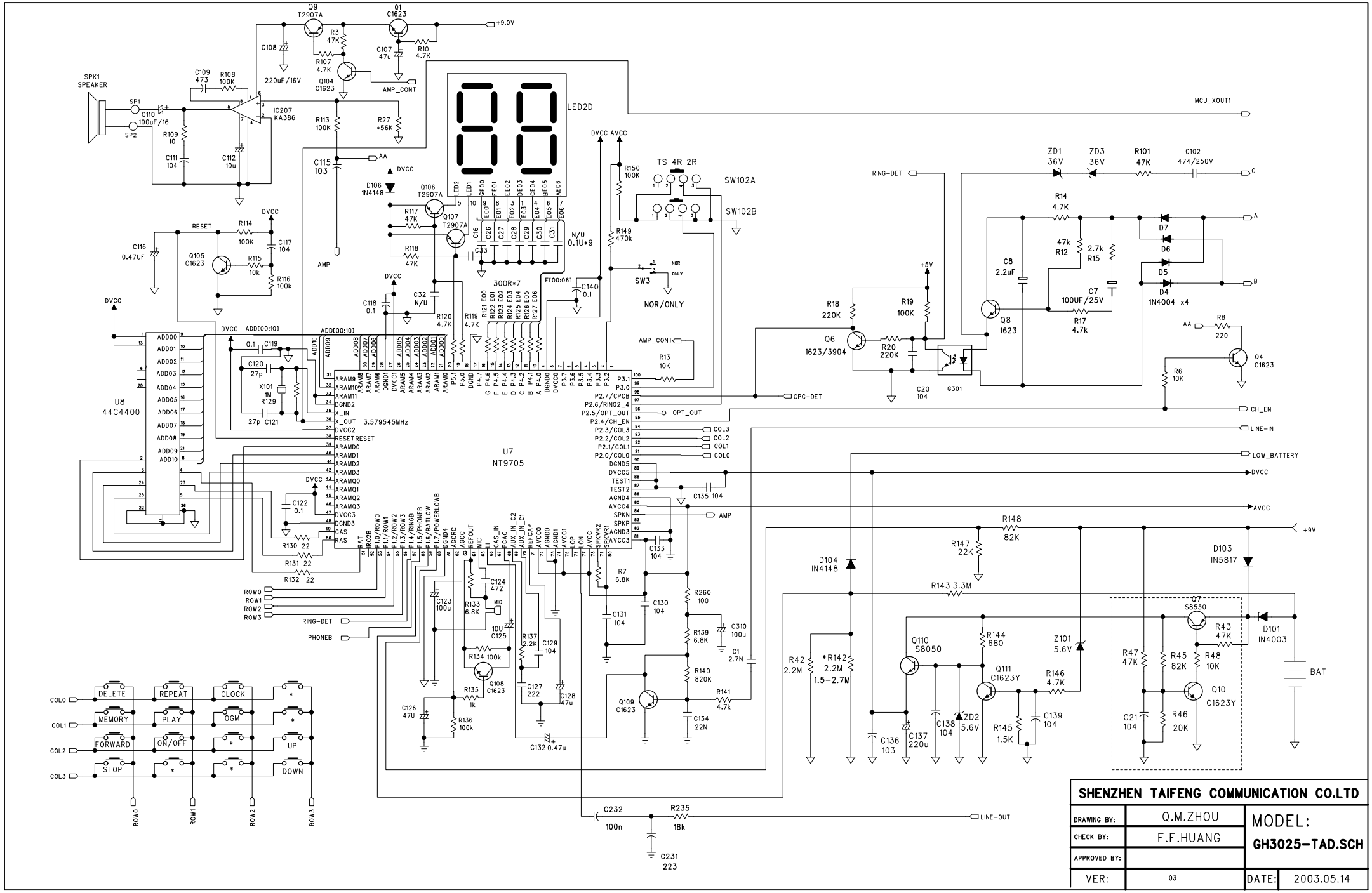
SHENZHEN TAIFENG COMMUNICATION CO.LTD
DRAWING BY: Q.M.ZHOU
CHECK BY: F.F.HUANG
APPROVED BY:
VER: 03
MODEL: GH3025-TAD.SCH
DATE: 2003.05.14
U7 NT9705
U8 44C4400
IC207 KA386
LED2D
TS 4R 2R
SW102A
SW102B
SW3
NOR/ONLY
SPK1 SPEAKER
MCU_XOUT1
CPC-DET
OPT_OUT
CH_EN
LINE-IN
LOW_BATTERY
DVCC
AVCC
LINE-OUT
BAT
RING-DET
PHONEB
AMP_CONT
DELETE
REPEAT
CLOCK
MEMORY
PLAY
OGM
FORWARD
ON/OFF
UP
STOP
DOWN

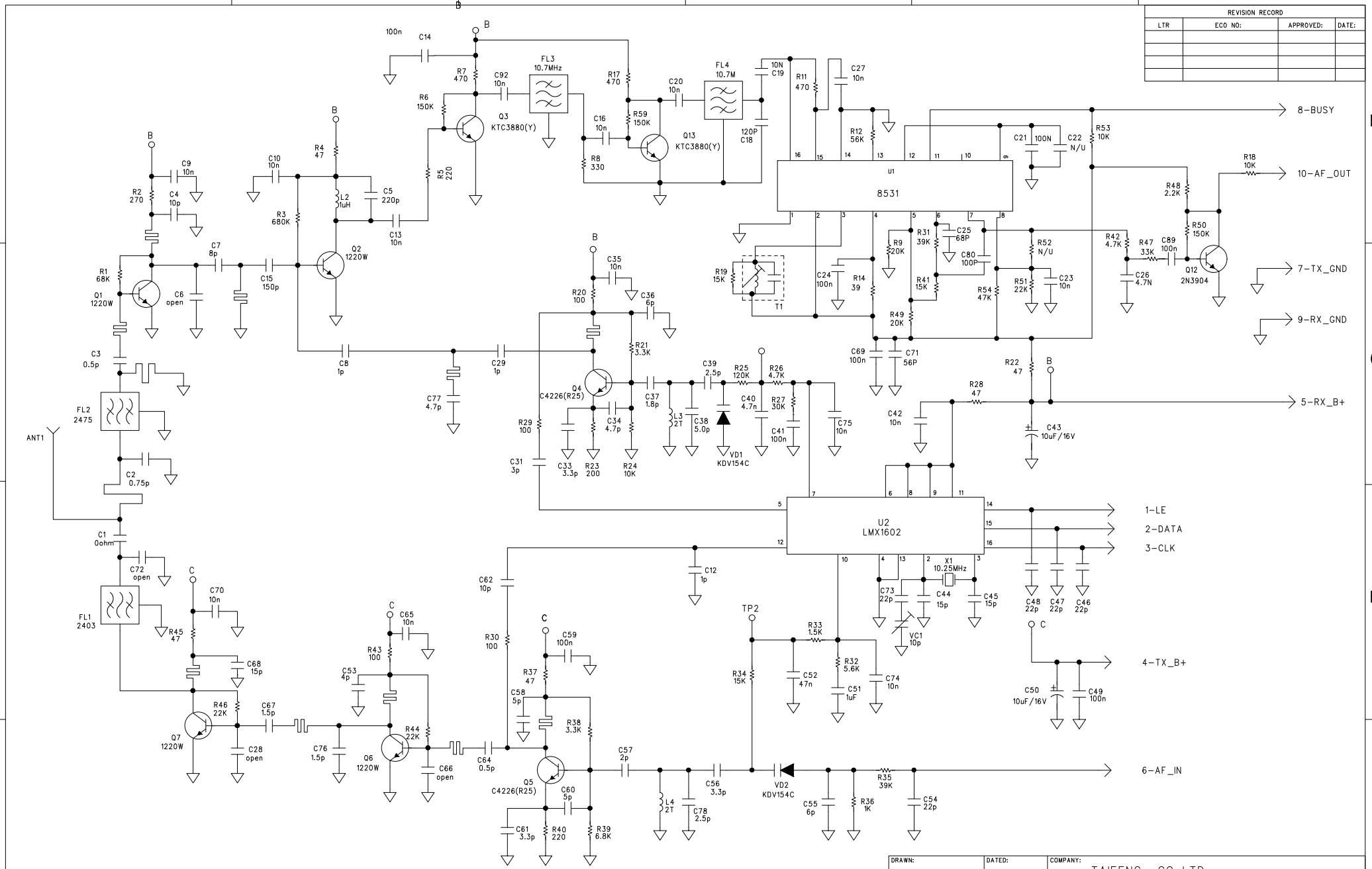


| REVISION RECORD | | | |
|---|---|---|---|
| LTR | ECO NO: | APPROVED: | DATE: |
| | | | |
| | | | |
| | | | |
| | | | |

| | | | |
|---|---|---|---|
| DRAWN: | DATED: | COMPANY: TAIFENG CO.,LTD. | |
| CHECKED: | DATED: | TITLE: BASE RFMODULE (2.4GHz) - G24RFB4 | |
| DESIGNED: | DATED: | CODE: / SIZE: / DRAWING NO: | REV: 07 |
| RELEASED: | DATED: | DATE: 17.Feb.2003 | SHEET: 1 OF 1 |

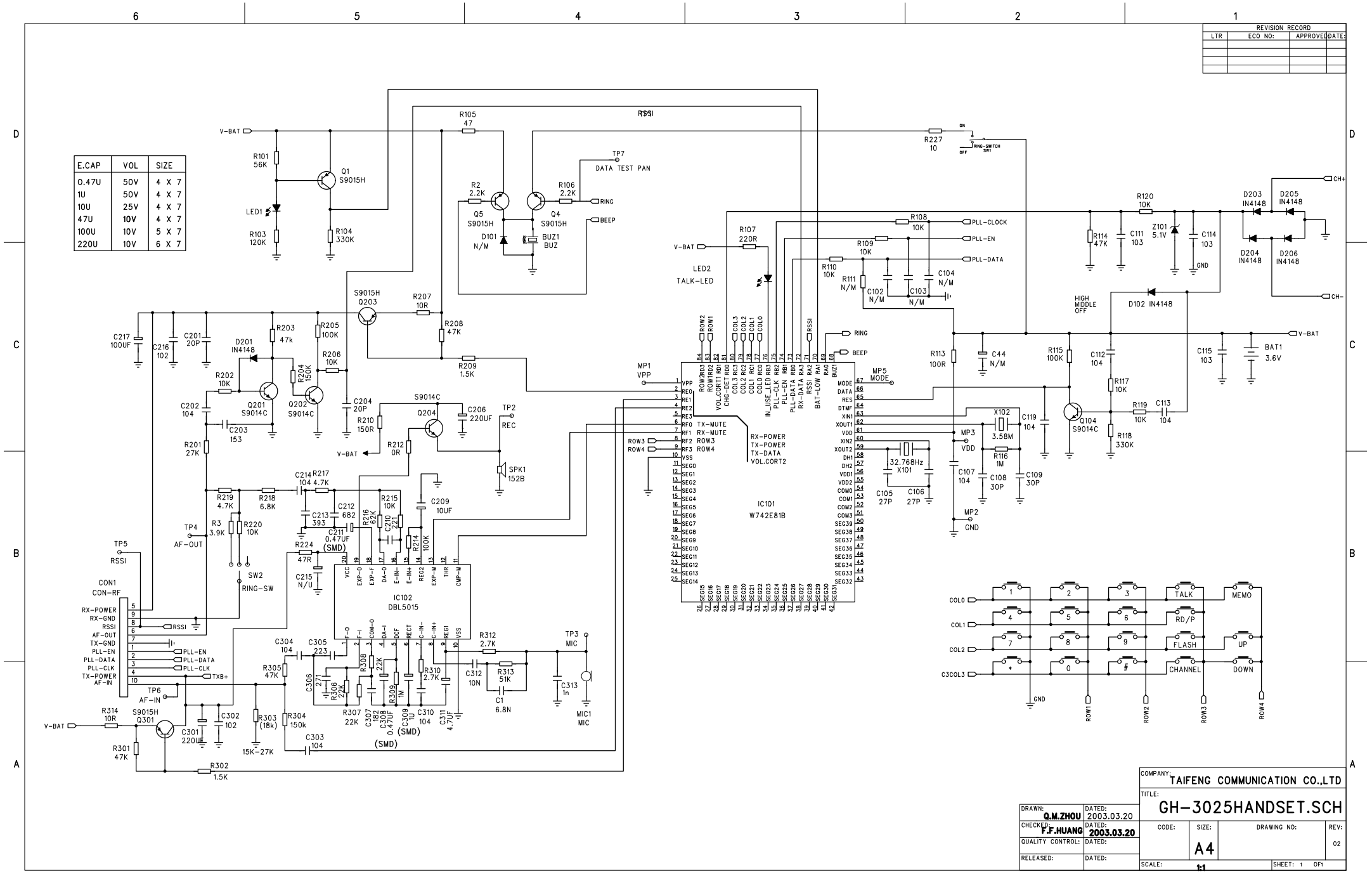
REVISION RECORD
LTR
ECO NO:
APPROVED
DATE:
E.CAP VOL SIZE
0.47U 50V 4 X 7
1U 50V 4 X 7
10U 25V 4 X 7
47U 10V 4 X 7
100U 10V 5 X 7
220U 10V 6 X 7
V-BAT
R101 56K
Q1 S9015H
LED1
R103 120K
R104 330K
R105 47
RSSI
R227 10
ON
OFF
RING-SMITCH SW1
TP7
DATA TEST PAN
R2 2.2K
R106 2.2K
RING
BEEP
Q5 S9015H
Q4 S9015H
D101 N/M
BUZ1 BUZ
R107 220R
LED2 TALK-LED
R108 10K
PLL-CLOCK
R109 10K
PLL-EN
R110 10K
PLL-DATA
R111 N/M
C102 N/M
C103 N/M
C104 N/M
R120 10K
D203 IN4148
D205 IN4148
D204 IN4148
D206 IN4148
CH+
CH-
R114 47K
C111 103
Z101 5.1V
C114 103
GND
HIGH MIDDLE OFF
D102 IN4148
S9015H Q203
R207 10R
R208 47K
R209 1.5K
C217 100UF
C216 102
C201 20P
D201 IN4148
R203 47k
R205 100K
R206 10K
R202 10K
R204 150K
Q201 S9014C
Q202 S9014C
C202 104
C203 153
C204 20P
R201 27K
S9014C
Q204
C206 220UF
TP2
REC
R210 150R
R212 0R
SPK1 152B
MP1 VPP
ROW2 ROW1 COL3 COL2 COL1 COL0 RSSI
RING
BEEP
MP5 MODE
RX-POWER
TX-POWER
TX-DATA
VOL.CORT2
TX-MUTE
RX-MUTE
ROW3
ROW4
IC101 W742E81B
X102 3.58M
C119 104
MP3 VDD
R116 1M
C108 30P
C109 30P
C107 104
MP2 GND
32.768Hz X101
C105 27P
C106 27P
R113 100R
C44 N/M
R115 100K
C112 104
R117 10K
R119 10K
C113 104
Q104 S9014C
R118 330K
C115 103
BAT1 3.6V
R214 100K
C209 10UF
C214 104
R217 4.7K
R219 4.7K
R218 6.8K
C213 393
C212 682
R216 62K
R215 10K
C210 221
C211 0.47UF (SMD)
R3 3.9K
R220 10K
TP4 AF-OUT
TP5 RSSI
SW2 RING-SW
R224 47R
C215 N/U
CON1 CON-RF
RX-POWER
RX-GND
RSSI
AF-OUT
TX-GND
PLL-EN
PLL-DATA
PLL-CLK
TX-POWER
AF-IN
TXB+
IC102 DBL5015
C304 104
C305 223
R305 47K
R306 22K
R308 22K
R309 1M
R307 22K
C307 182
C308 0.47UF
C309 1U (SMD)
C310 104
C311 4.7UF
R310 2.7K
R312 2.7K
R313 51K
C312 10N
C1 6.8N
TP3 MIC
C313 1n
MIC1 MIC
TP6 AF-IN
R314 10R
S9015H Q301
C301 220UF
C302 102
R303 (18k)
R304 150k
15K-27K
C303 104 (SMD)
R301 47K
R302 1.5K
COL0
COL1
COL2
C3COL3
1 2 3 TALK MEMO
4 5 6 RD/P
7 8 9 FLASH UP
* 0 # CHANNEL DOWN
ROW1 ROW2 ROW3 ROW4
COMPANY: TAIFENG COMMUNICATION CO.,LTD
TITLE: GH-3025HANDSET.SCH
DRAWN: Q.M.ZHOU DATED: 2003.03.20
CHECKED: F.F.HUANG DATED: 2003.03.20
QUALITY CONTROL: DATED:
RELEASED: DATED:
CODE: SIZE: A4 DRAWING NO: REV: 02
SCALE: 1:1 SHEET: 1 OF1

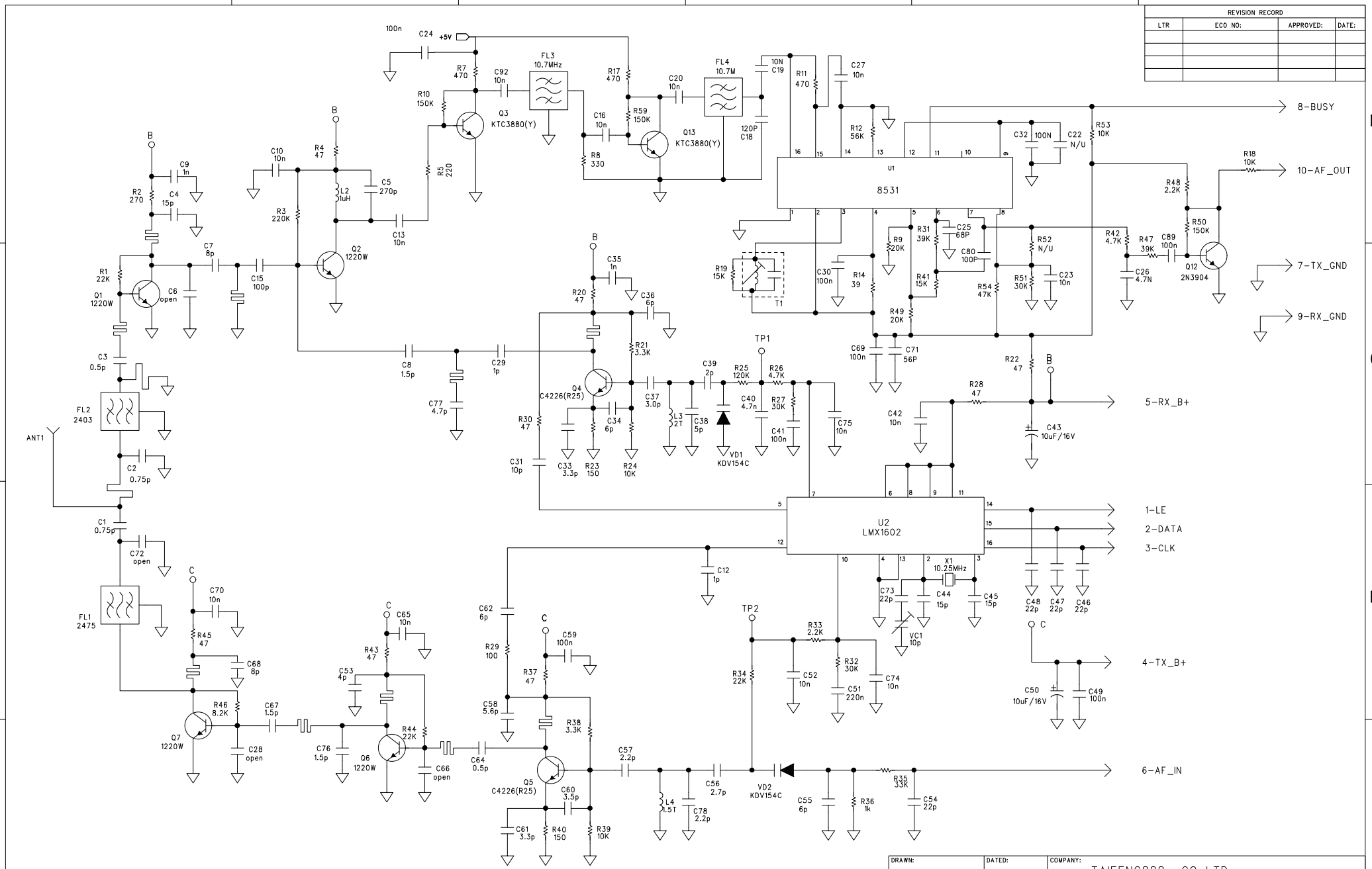
REVISION RECORD
LTR
ECO NO:
APPROVED:
DATE:
8-BUSY
10-AF_OUT
7-TX_GND
9-RX_GND
5-RX_B+
1-LE
2-DATA
3-CLK
4-TX_B+
6-AF_IN
ANT1
U1
8531
U2
LMX1602
Q3
KTC3880(Y)
Q13
KTC3880(Y)
Q1
1220W
Q2
1220W
Q4
C4226(R25)
Q5
C4226(R25)
Q6
1220W
Q7
1220W
Q12
2N3904
FL1
2475
FL2
2403
FL3
10.7MHz
FL4
10.7M
T1
VD1
KDV154C
VD2
KDV154C
VC1
10p
X1
10.25MHz
TP1
TP2
+5V
DRAWN:
DATED:
CHECKED:
DESIGNED:
RELEASED:
COMPANY:
TAIFENG888 CO.,LTD.
TITLE:
HAND RFMODULE (2.4GHz)
CODE:
SIZE:
DRAWING NO:
REV:
07
DATE: 17.Feb.2003
SHEET: 1 OF 1