Bottom of Handset:

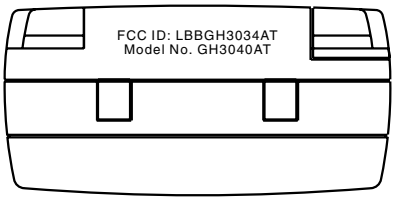

3040
07/26/2002
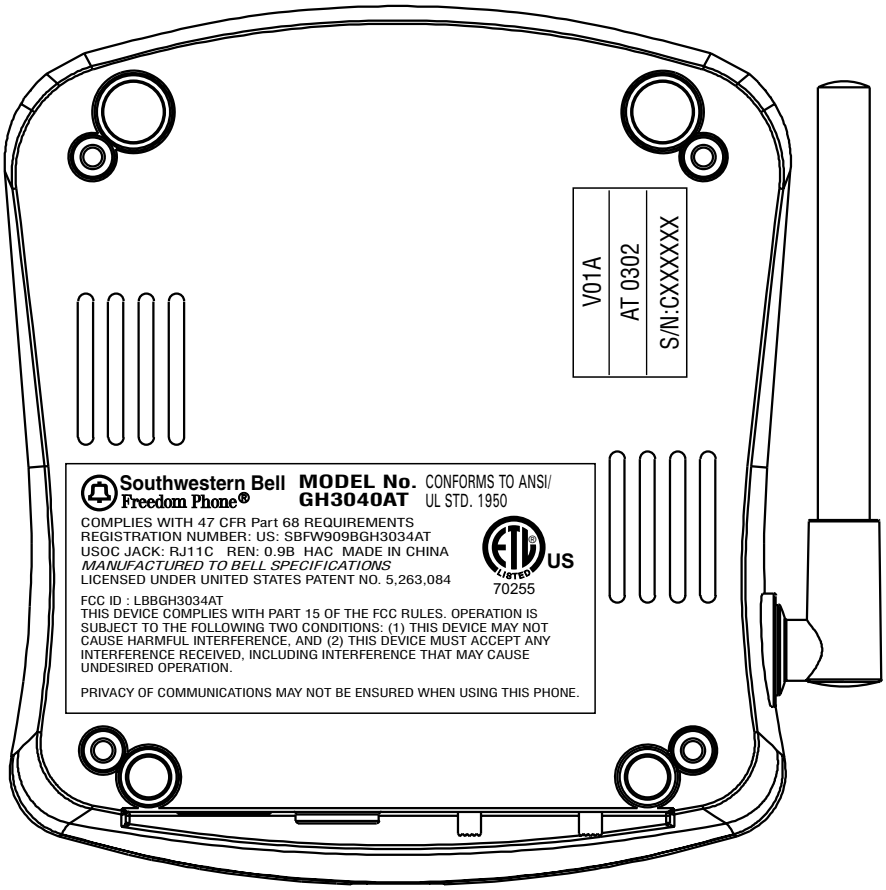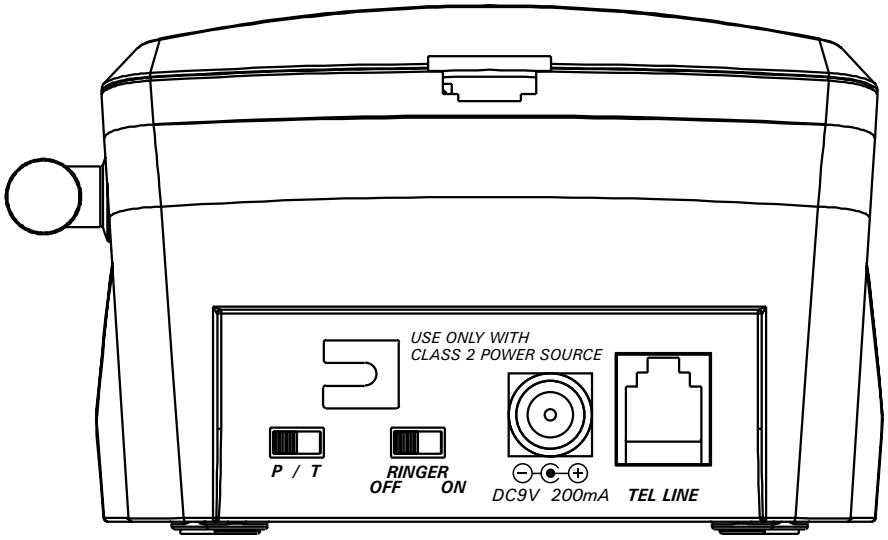
Bottom of Base unit: