POWER EQUIPMENT
ESTABLISHED 1981

OPERATION and MAINTENANCE MANUALS

For

BRISBANE CITY COUNCIL

At

BRISBANE WATER

SEWAGE PUMP STATION

SP103 HEROES AVENUE

Manuals Prepared by:

S E Power Equipment
47 Proprietary Street
Tingalpa, Qld 4173
Phone No. 07 3890 1744

Copyright © 2002 All Rights Reserved

REVISION B: July 2003

Revision Status

Revision	Date	Initials	Comments
A	26/05/03	JP	Issued for approval
B	30/07/03	JP	

Prepared by: Jim Pringle Date: _____/_____/_____

Reviewed
Project Manager: _____ Date: _____/_____/_____

TABLE OF CONTENTS

Section 1. Instructions for use

Section 2. Deutz Operation Manual

Section 3. Deutz Spare Parts Catalogue

Section 4. Stamford Installation, Service & Maintenance Manual

Section 5. PLC – GE Fanuc

Section 6. Functional Description

Section 7. Drawings

Section 8. Test Reports

INSTRUCTIONS FOR USE

1. Units placed on site using "Hook Truck" (Cleanaway Type) over cable pit.
2. Cable pit to be under switchboard section of unit (rear).
3. Attach hold down / anti-theft chains to location points at rear of unit (beside switchboard).
4. Check engine lube oil level.
5. Check engine coolant level.
6. Check the battery is connected and the electrolyte level is correct.
7. Connect cables to plugs via colour-coded sequence.
8. Connect power inlet socket (240V).
9. Connect communication socket.
10. Connect pump station control socket.
11. Check fuel level (mechanical gauge beside fill point).
12. Refer to section 6, Functional Description for start/run and connection procedure.
13. Remember **SAFETY** is important **ALWAYS** wear your Personal Protection Equipment (PPE)

Operation Manual

1015

0297 9684 en

Engine Serial Number:

Please enter here the engine serial number. By quoting this number you will help to facilitate dealing with questions concerning Customer Service, Repairs and Spare Parts (see Section 2.1).

In view of continuous design improvements or changes, the technical specifications and the illustrations shown in this Operation Manual are subject to alteration. Reprinting and reproduction, in part or in whole, are subject to our written approval.

DEUTZ

Foreword

Dear Customer,

Liquid-cooled DEUTZ engines are designed for a broad spectrum of applications.Consequently, a wide range of variants are offered to meet the specific requirements of each individual case.

Your engine is appropriately equipped for the installation concerned, which means that not all the components described in this Operation Manual are necessarily mounted to your engine.

We have endeavoured to highlight any differences so that you will be able to locate the operating and maintenance instructions relevant to your engine quickly and easily.

Please read this Manual before starting your engine, and always observe the operating and maintenance instructions.

Should you have any inquiries we shall be pleased to provide advice.

Sincerely,

DEUTZ AG

Table of Contents

1. General

2. Description of Engine
2.1 Model Designation
2.1.1 Rating Plate
2.1.2 Location of Rating Plate
2.1.3 Engine Serial Number
2.1.4 Numbering of Cylinders
2.2 Engine Illustrations
2.2.1 Cyl. Bank A BF6 M 1015
2.2.2 Cyl. Bank B BF6 M 1015
2.2.3 Cyl. Bank A BF8 M 1015
2.2.4 Cyl. Bank B BF8 M 1015
2.3 Lube Oil Circuit
2.3.1 Lube Oil Circuit Schematic 1015

3. Operation
3.1 Commissioning
3.1.1 Filling in Engine Oil
3.1.2 Filling Oil Bath Air Cleaner with Engine Oil
3.1.3 Filling the Fuel Tank
3.1.4 Filling/Bleeding the Cooling System 1015
3.1.5 Other Preparations
3.2 Starting
3.2.1 Electric Starting
3.3 Monitoring Systems
3.3.1 Engine Oil Pressure
3.3.2 Coolant Temperature
3.3.3 Coolant Level
3.3.4 Lube Oil Level
3.4 Stopping
3.4.1 Mechanical Shutdown
3.4.2 Electric Shutdown
3.5 Operating Conditions
3.5.1 Winter Operation
3.5.2 High Ambient Temperature, High Altitude

4. Operating Media
4.1 Lube Oil
4.1.1 Quality Grade
4.1.2 Viscosity
4.2 Fuel
4.2.1 Quality Grade
4.2.2 Winter Grade Fuel
4.3 Coolant
4.3.1 Water Quality for Coolant Preparation
4.3.2 Coolant Preparation
4.3.3 Cooling System Protective Agents

5. Routine Maintenance
5.1 Maintenance Schedule
5.2 Maintenance Chart
5.3 Completed Maintenance Jobs

6. Service and Maintenance
6.1 Lubrication System
6.1.1 Oil Change Intervals
6.1.2 Changing Engine Oil, Checking Oil Level
6.1.3 Renewing Oil Filter
6.2 Fuel System
6.2.1 Renewing Fuel Filter
6.2.2 Change Fuel Leakage Line
6.3 Cooling System
6.3.1 Cleaning Intervals
6.3.2 Draining Cooling System
6.3.3 Filling/Bleeding Cooling System
6.3.4 Cleaning engine
6.4 Combustion Air Cleaner
6.4.1 Cleaning Intervals
6.4.2 Dry-Type Air Cleaner
6.4.3 Removing Cyclone-Type Precleaner
6.4.4 Cleaning Oil Bath Air Cleaner
6.5 Belt Drives
6.5.1 Checking Alternator V-Belt
6.5.2 Retensioning/Renewing Alternator V-Belt
6.6 Adjustments
6.6.1 Checking/Adjusting Valve Clearances
6.6.1.1 Valve Clearance Adjustment Schematic
6.7 Accessories
6.7.1 Battery
6.7.2 Three-Phase Alternator
6.7.3 Lifting Tackle

7. Troubleshooting
7.1 Diagnosis Chart

8. Engine Preservation
8.1 Preservation

9. Specification Data
9.1 Engine Specifications and Settings
9.2 Torque Wrench Settings
9.3 Tools

10. Service

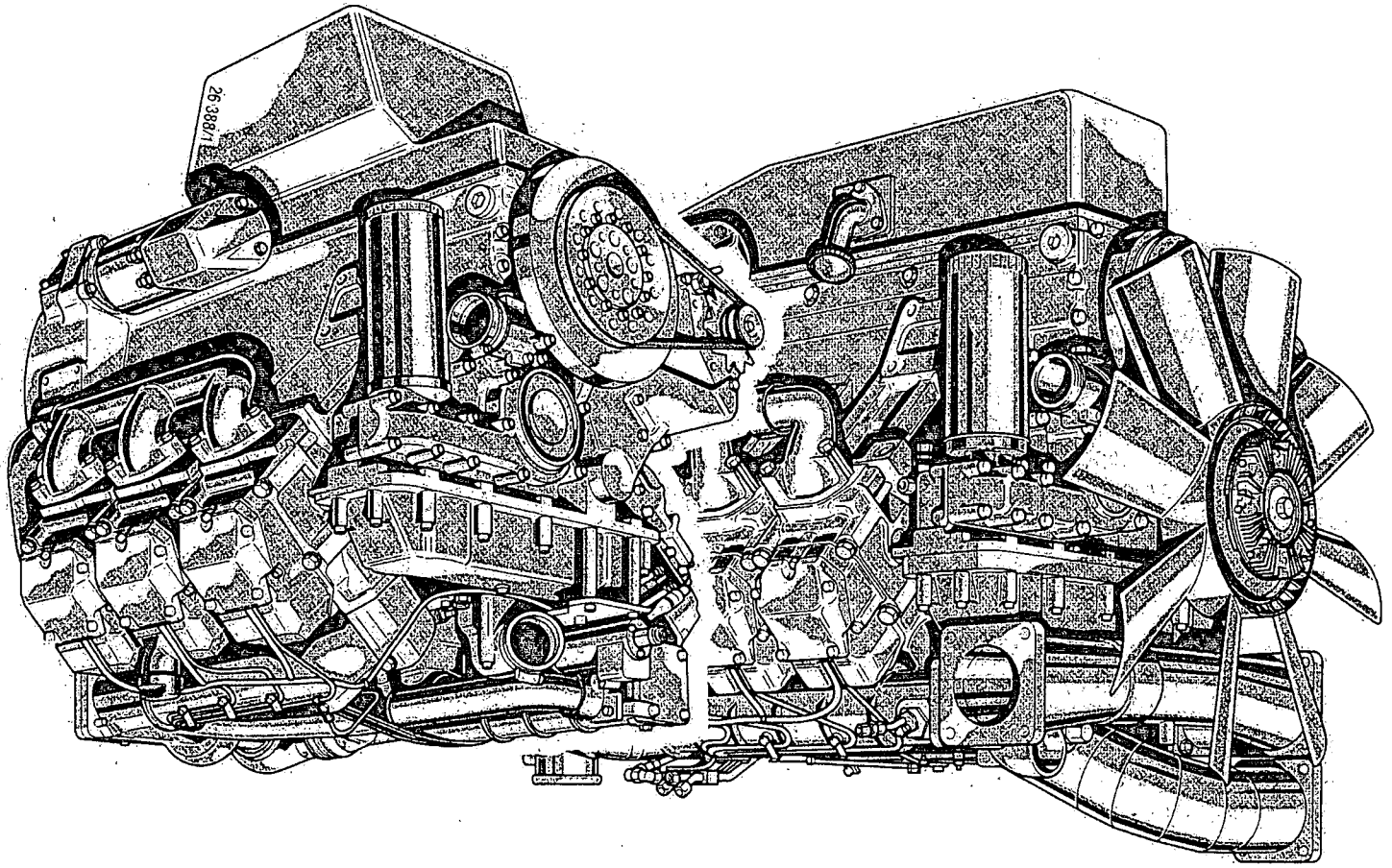
26 388/1

General

DEUTZ Diesel Engines

are the product of many years of research and development. The resulting know-how, coupled with stringent quality standards, guarantee their long service life, high reliability and low fuel consumption.
It goes without saying that DEUTZ Diesel Engines meet the highest standards for environmental protection.

Beware of Running Engine

Shut the engine down before carrying out maintenance or repair work. Ensure that the engine cannot be accidentally started. Risk of accidents.
When the work is complete, be sure to refit any panels and guards that may have been removed.
Never fill the fuel tank while the engine is running.
Observe industrial safety regulations when running the engine in an enclosed space or underground.

Care and Maintenance

Sound care and maintenance practices will ensure that the engine continues to meet the requirements placed on it. Recommended service intervals must be observed and service and maintenance work carried out conscientiously.
Special care should be taken under abnormally demanding operating conditions.

Safety

This symbol is used for all safety warnings. Please follow them carefully. The attention of operating personnel should be drawn to these safety instructions. General safety and accident prevention regulations laid down by law must also be observed.

Asbestos

DEUTZ original parts are asbestos-free.

Service

Please contact one of our authorized service representatives in the event of breakdowns or for spare parts inquiries. Our trained specialists will carry out repairs quickly and professionally, using only genuine spare parts.
Original parts from DEUTZ AG are always produced in accordance with state-of-the-art technology.
Please turn to the end of this manual for further service information.

California

Proposition 65 Warning

Diesel engine exhaust and some of its constituents are known to the State of California to cause cancer, birth defects, and other reproductive harm.

Description of Engine

2

2.1 Model Designation
2.2 Engine Illustrations
2.3 Lube Oil Circuit

Description of Engine

2.1 Model Designation

2

2.1.1 Rating Plate

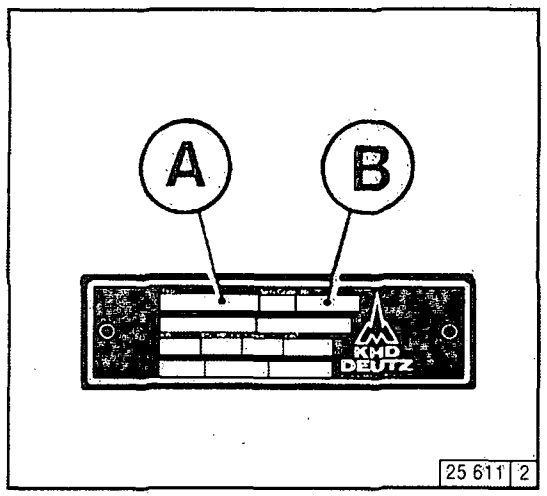

The model designation **A**, the engine serial number **B** and the performance data are stamped on the rating plate.

When ordering spare parts, it is essential to quote the model designation and the engine serial number.

2.1.2 Location of Rating Plate

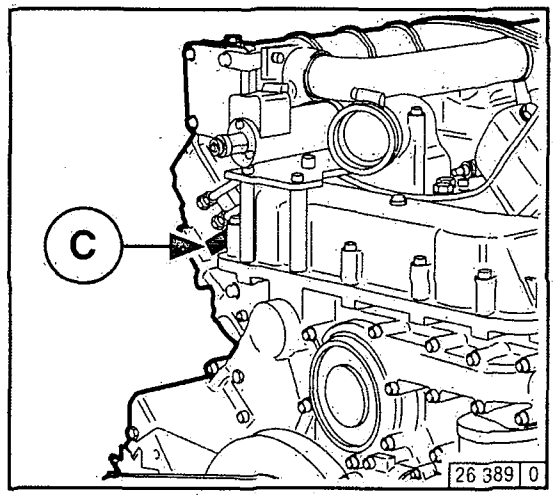

The rating plate **C** is affixed to the crankcase.

2.1.3 Engine Serial Number

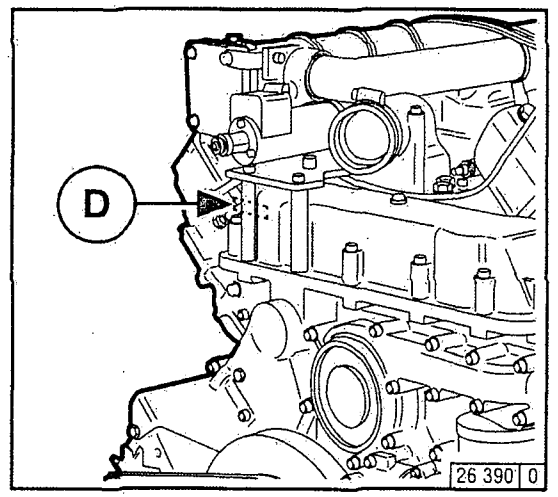

The engine serial number is stamped on the crankcase iteself (arrow) and on the rating plate.

2.1 Model Designation

Description of Engine

2

2.1.4 Numbering of Cylinders

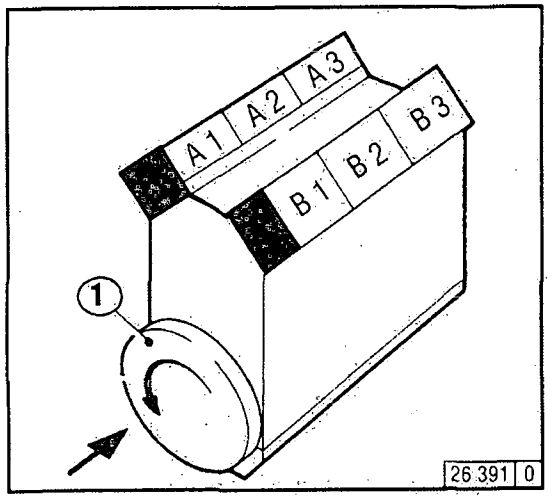

The cylinders are numbered consecutively for either cyl. bank A or B, beginning at flywheel end.

Description of Engine

2.2 Engine Illustration

2.2.1 Cyl. Bank A – BF6M 1015

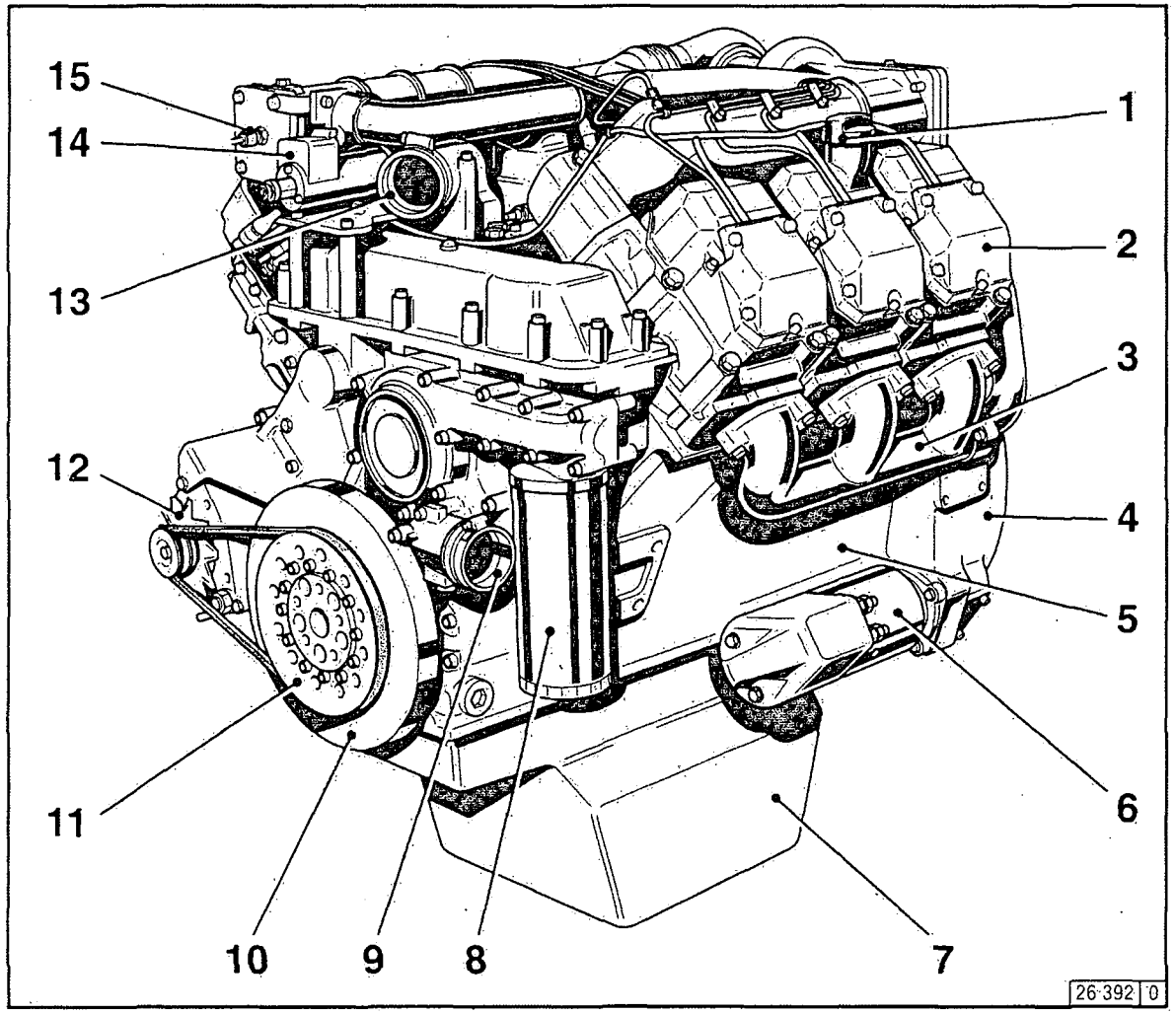

1 Oil filler neck
2 Cylinder head
3 Exhaust manifold
4 SAE housing
5 Crankcase
6 Starter
7 Oil pan
8 Oil filter
9 Coolant connection from heat exchanger to engine
10 Vibration damper
11 V-belt pulley
12 Alternator
13 Coolant connection to heat exchanger
14 Solenoid (shutdown solenoid)
15 Flame-type heater plug (B-side)

Notes

Warnings to Place on Equipment

CALIFORNIA

Proposition 65 Warning

Diesel engine exhaust and some of its constituents are known to the State of California to cause cancer, birth defects, and other reproductive harm.

Warning in the Manual

CALIFORNIA

Proposition 65 Warning

Diesel engine exhaust and some of its constituents are known to the State of California to cause cancer, birth defects, and other reproductive harm.

or

CALIFORNIA

Proposition 65 Warning

Diesel engine exhaust and some of its constituents are known to the State of California to cause cancer, birth defects, and other reproductive harm.

Description of Engine

2.2 Engine Illustration

2

2.2.3 Cyl. Bank A – BF8M 1015

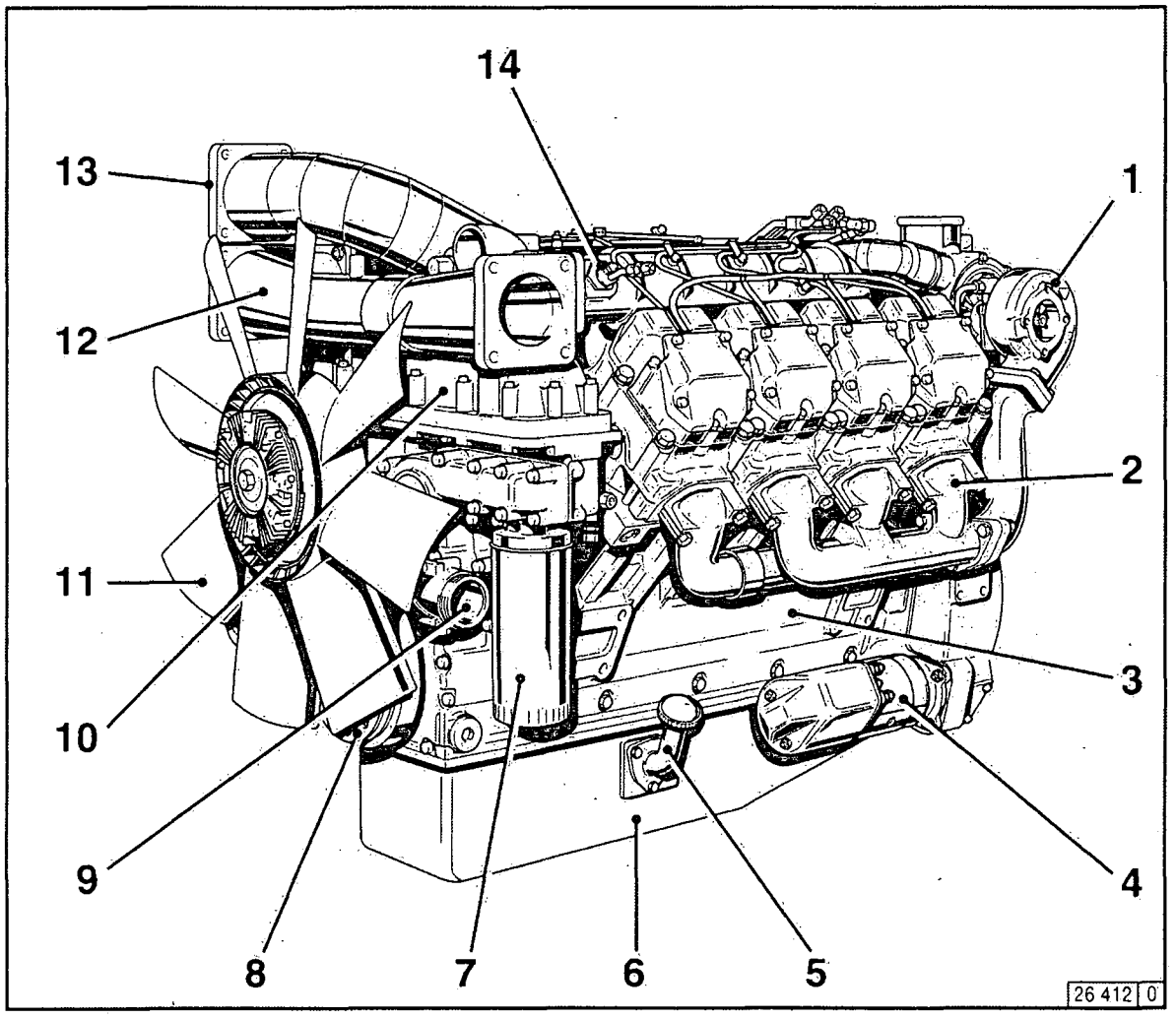

1 Exhaust turbocharger
2 Exhaust manifold
3 Crankcase
4 Starter
5 Oil filler neck
6 Oil pan
7 Lube oil filter
8 V-belt pulley with vibration damper
9 Coolant connection from heat exchanger to engine
10 Oil cooler
11 Fan
12 Exhaust stack
13 Charge air pipe to the charge air cooler
14 Flame-type heater plug system (B-side)

2.2 Engine Illustration

2.2.4 Cyl. Bank B – BF8M 1015

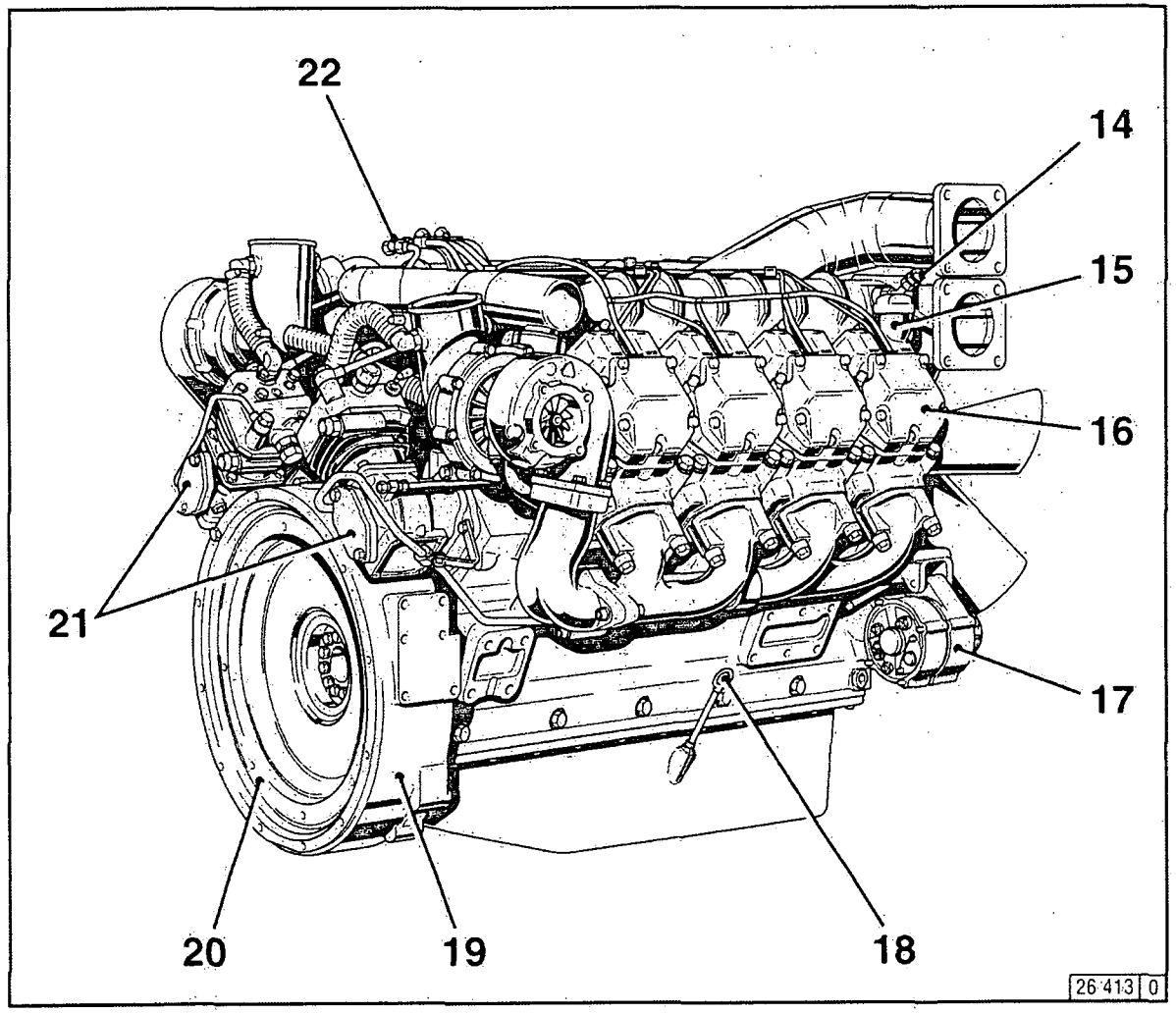

14 Flame-type heater plug system (A-side)
15 Oil filler neck
16 Cylinder head
17 Alternator
18 Oil dipstick
19 SAE housing
20 Flywheel
21 Compressor
22 Fuel connecting line

Description of Engine

2.3 Lube Oil Circuit

2

2.3.1 Lube Oil Circuit Schematic 1015
Wet Sump Lubrication

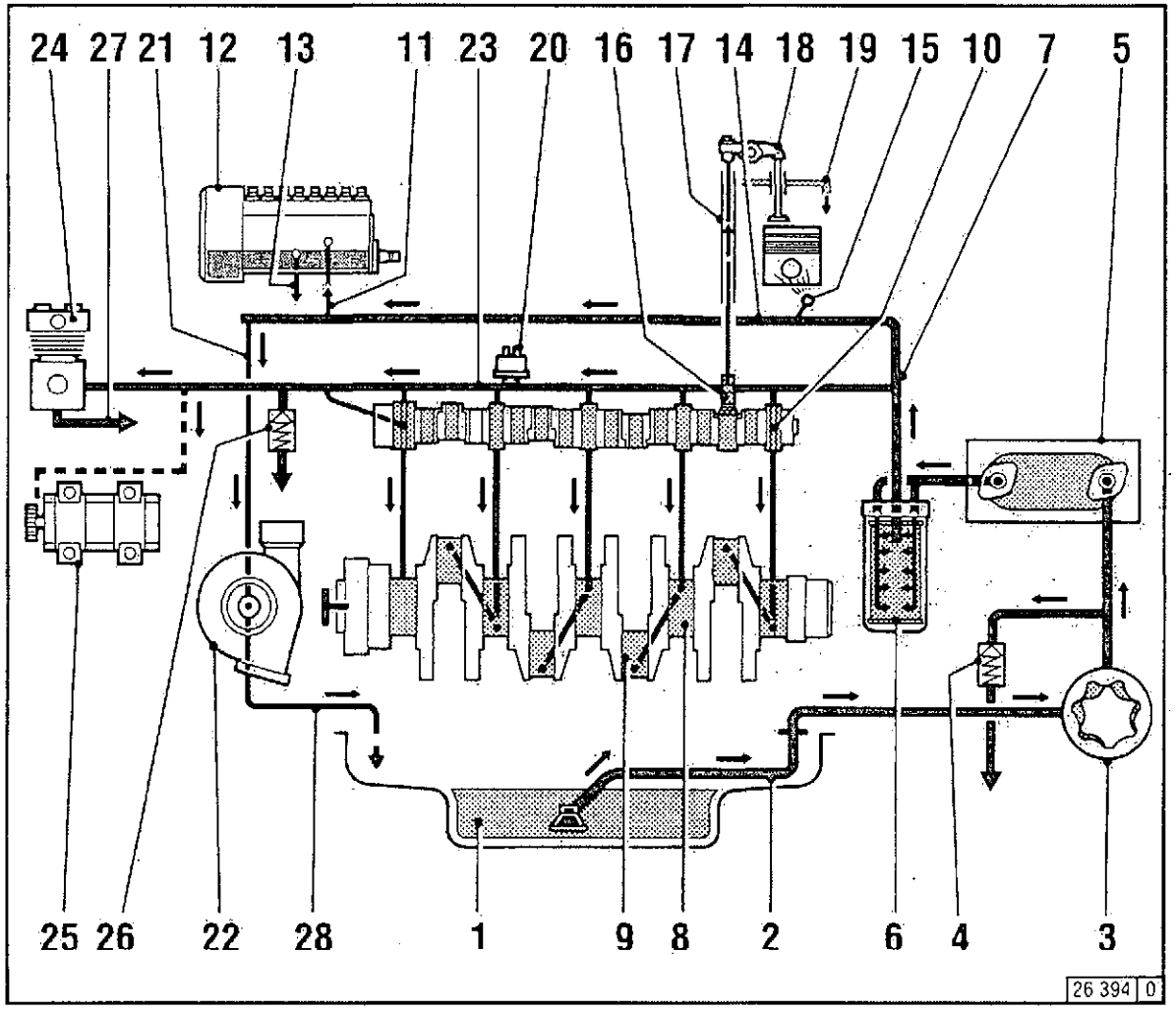

1 Oil pan
2 Intake pipe
3 Oil pump
4 Overpressure relief valve
5 Oil cooler
6 Spin-on oil filter
7 Main oil bores
8 Main bearing
9 Big-end bearing
10 Camshaft bearing
11 Oil supply to injection pump
12 Injection pump
13 Return line from injection pump to crankcase
14 Line to spray nozzle
15 Spray nozzle with pressure-holding valve for piston cooling
16 Tappet with control groove for pulse lubrication of rocker arms
17 Pushrod, oil supply to rocker arm lubrication
18 Rocker arm
19 Oil return bore in cylinder head to crankcase.
20 Oil pressure sensor / oil pressure switch
21 Oil line to exhaust turbocharger
22 Exhaust turbocharger
23 Oil line to compressor (hydr. pump)
24 Compressor
25 Hydraulic pump
26 Pressure-holding valve (adjustable)
27 Oil return line from compressor (hydr. pump) to crankcase
28 Oil return line from turbocharger to crankcase

Engine Operation

3

3.1 Commissioning
3.2 Starting
3.3 Monitoring Systems
3.4 Stopping
3.5 Operating Conditions

Engine Operation

3.1 Commissioning

3

3.1.1 Filling in Engine Oil

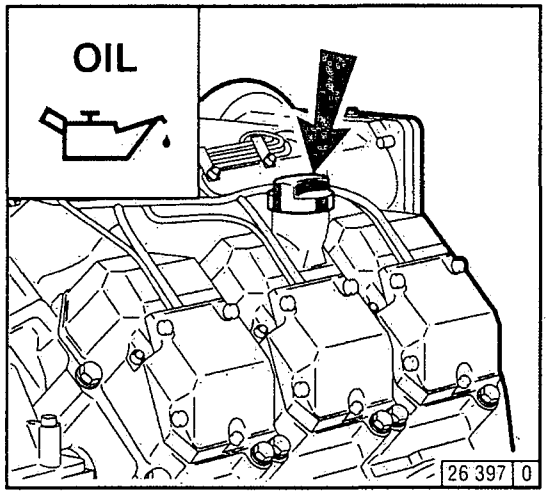

As a rule, the engines are delivered without oil filling.

Fill in lube oil through the oil filler neck (arrow).

For oil filling volume, see 9.1.

For oil quality grade and oil viscosity, see 4.1.

3.1.2 Filling Oil Bath Air Cleaner with Engine Oil

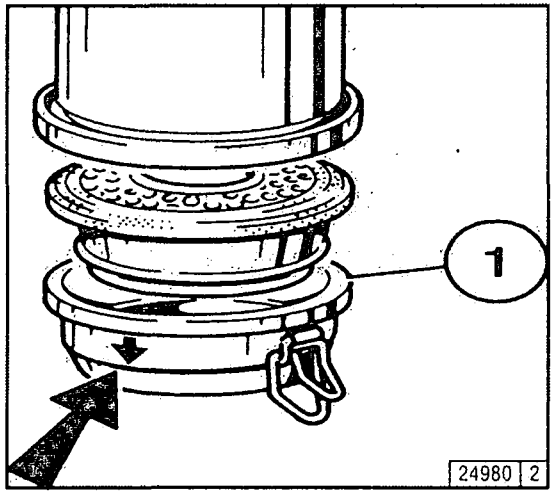

Fill engine oil into bowl 1 of oil bath air cleaner (if fitted) up to the arrow mark.

For oil quality grade and oil viscosity, see 4.1.

Never fill oil into the precleaner's dust collector, if provided.

3.1.3 Filling the Fuel Tank

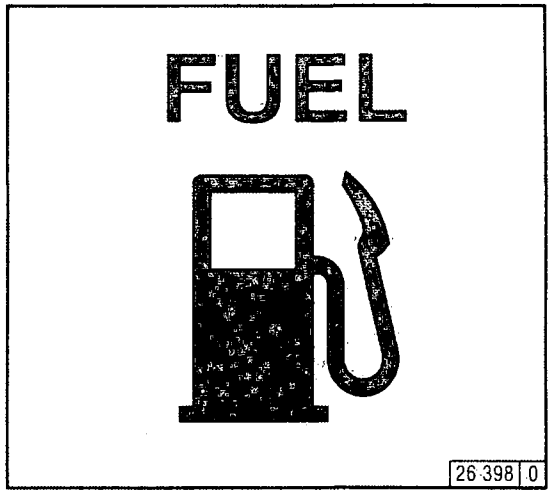

Use only commercial-grade diesel fuel. For fuel quality grade, see 4.2.

Use summer- or winter-grade fuel, depending on the ambient temperature.

Stop engine before filling the fuel tank!

Observe strict cleanliness! Do not spill any fuel!

3.1.4 Filling/Bleeding Cooling System 1015

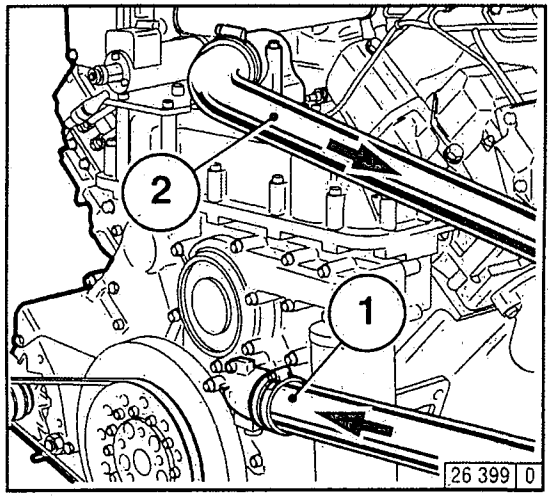

- Connect coolant inlet 1 and coolant outlet 2 to external coolant tank.
- Fill in coolant into cooling system.
- Start engine and run up to normal operating temperature until thermostat opens (line 2 warms up).
- Check coolant level in external cooling system, top up coolant if necessary.

3.1.5 Other Preparations

- Check battery and battery cable connections, see 6.7.1.
- **Trial run**
  - Upon completing the preparations run the engine for a short trial run of about 10 minutes under low load.

  During and after trial run
  - Check the engine for leaks.

  After the engine has been stopped
  - Check oil level and top up if necessary, see 6.1.2
  - Retension V-belts, see 6.5.
- **Breaking-in**

  During the breaking-in phase, it is recommended to check the oil level twice a day.

  After the breaking-in phase, checking once a day will be sufficient.

Engine Operation

3.2 Starting

3.2.1 Electric Starting

Before starting, make sure that nobody is standing in the immediate vicinity of the engine or driven machine.

After repair work :

Check whether all removed guards are put back in place and all tools are removed from the engine.

When starting with flame-type heater plugs, do not use any other additional starting aids (e.g. injection with start pilot). Accident hazard!

Important: Never start the engine with speed governor removed.

Disconnect battery!

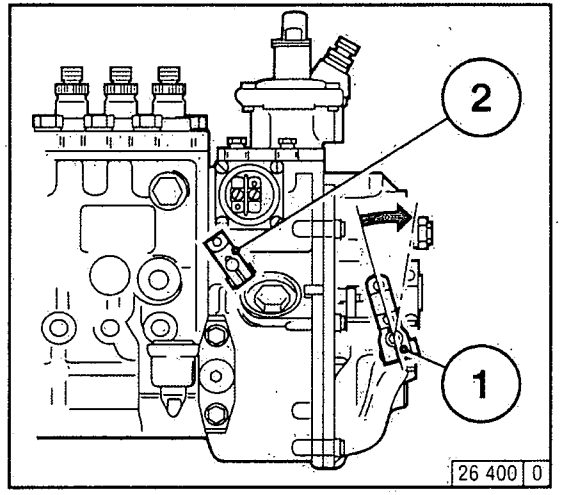

without Cold-Starting Aid

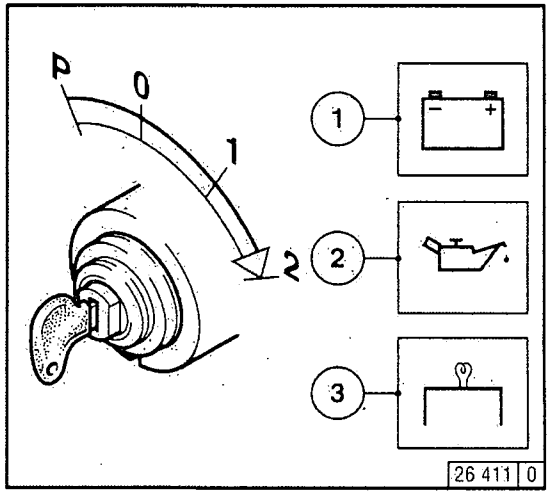

- Disengage the clutch to separate the engine from the driven equipment.
- Move speed control lever 1 in direction of arrow at least to middle speed position.
- Move shutdown lever 2 to „Run" position (opposite direction of arrow, item.1).

- Insert key.
  - Position 0 = no operating voltage.
- Turn key clockwise.
  - Position 1 = operating voltage,
  - Pilot lamps light up.
- Turn key further clockwise against spring action.
  - Position 2 = starting.
- Release key as soon as the engine starts firing.
  - Pilot lamps go out.

Do not actuate the starter for more than 20 seconds at a time. If the engine does not start, wait one minute before repeating the attempt.

If the engine does not start after two attempts, trace the cause with the aid of the Diagnosis Chart (see 7.1).

3.2 Starting

Engine Operation

3

with Cold-Starting Aid Flame-Type Heater Plug System

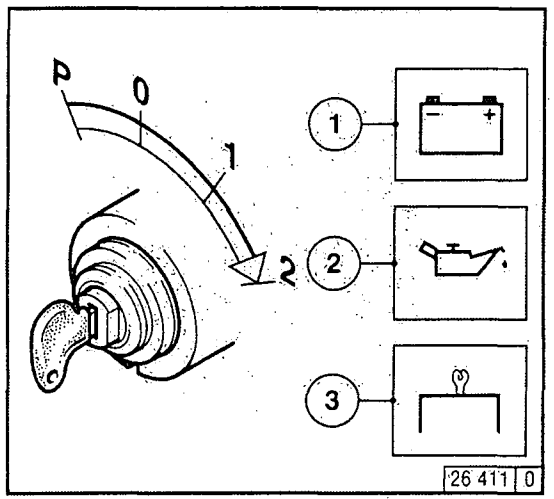

- Insert key.
  - Position 0 = no operating voltage.
- Turn key clockwise.
  - Position 1 = operating voltage,
  - Pilot lamps 1+2+3 light up.
  - Preheat until heater plug indicator 3 blinks, max. 30 seconds.
  - Engine is ready for operation.

Important: The starting process must be carried out within the 30 seconds, otherwise repeat starting attempt.

- Turn key further clockwise against spring action to
  - Position 2 = starting
- Release key as soon as the engine starts firing.
  - Pilot lamps go out.

Engine Operation

3.3 Monitoring Systems

3

3.3.1 Engine Oil Pressure

Oil Pressure Pilot Lamp

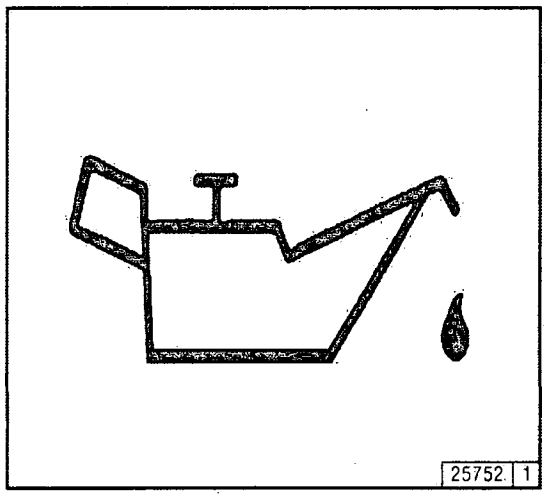

- The oil pressure pilot lamp lights up with operating voltage applied and engine shut off.
- The oil pressure pilot lamp must go out when the engine is running.

Oil Pressure Gauge

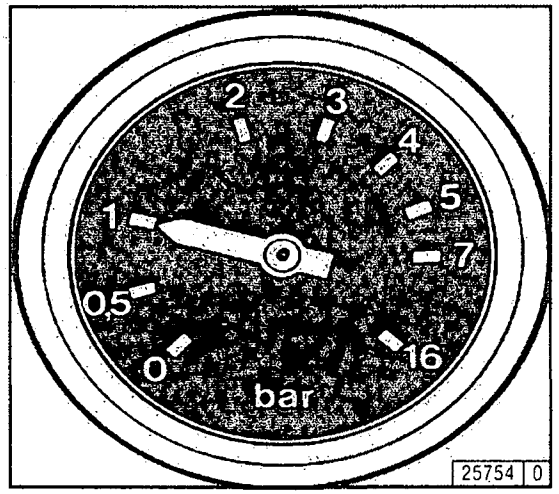

- The pointer of the oil pressure gauge must indicate the minimum oil pressure (see 9.1).

3.3.2 Coolant Temperature

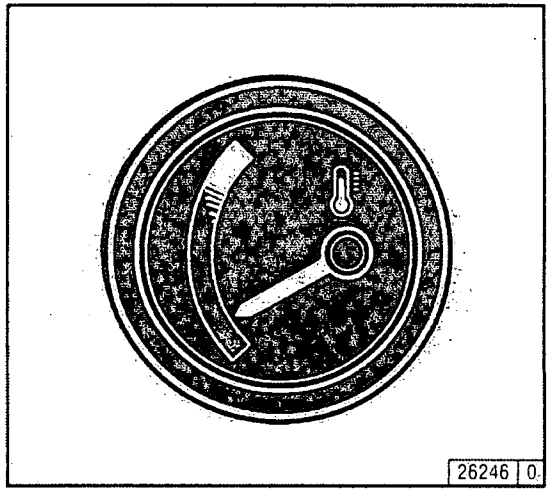

- The pointer of the temperature indicator should remain in the green sector and enter the yellow-greeen sector only in exceptional cases. If the pointer enters the orange sector, the engine is overheating. Turn it off and establish the cause from the Diagnosis Chart (see 7.1).

3.3 Monitoring Systems

3.3.3 Coolant Level

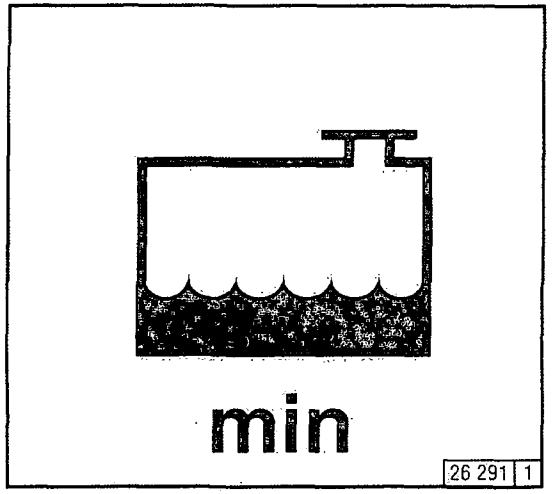

- Lamp of coolant level indicator lights up (contact via float switch/level sensor when min. coolant level has been reached):
  Turn engine off and establish cause from the Diagnosis Chart (see 7.1)

- Functional check of coolant level:
  Insert key in position 1 or 2
  (Float switch or level sensor)
  Pilot lamp lights up for about 2 seconds
  - Coolant level o.k.: lamp goes out
  - Coolant level not o.k.: lamp does not go out.

3.3.4 Lube Oil Level

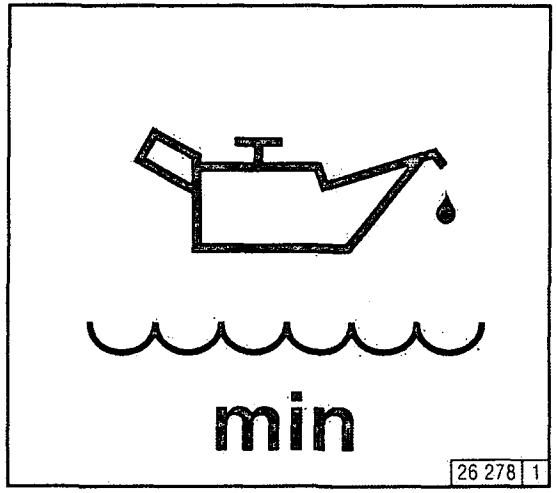

- Lamp of lube oil level indicator lights up (contact via float switch/level sensor when min. lube oil level has been reached):
  Turn engine off and establish cause from the Diagnosis Chart (see 7.1).

- Functional check of lube oil level:
  Insert key in position 1 or 2
  (Float switch or level sensor)
  Pilot lamp lights up for about 2 seconds
  - Lube oil level o.k.: lamp goes out
  - Lube oil level not o.k.: lamp does not go out.

Engine Operation

3.4 Starting

3

3.4.1 Mechanical Shutdown

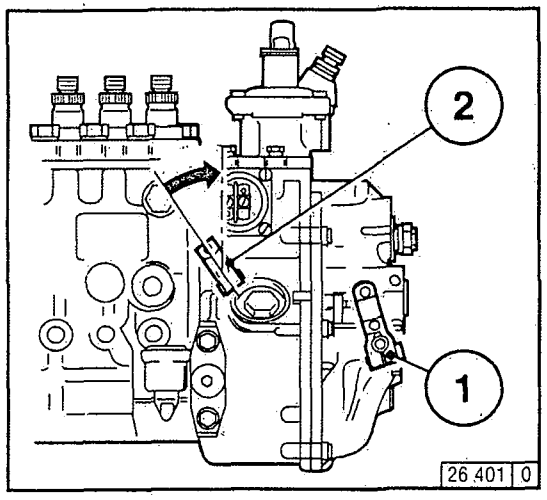

- Set speed control lever 1 to low speed position.
- Actuate shutdown lever 2 until engine comes to standstill. Charging-current and oil pressure pilot lamps light up when engine has come to standstill.

3.4.2 Electric Shutdown

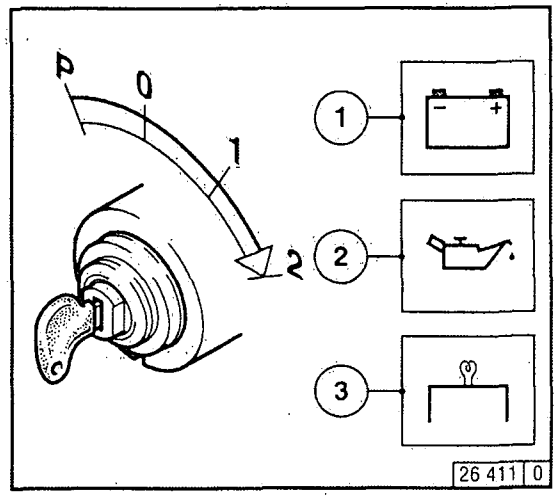

- Turn key counter-clockwise (to position 0) and pull off. Pilot lamps go out.

3.5 Operating Conditions

3.5.1 Winter Operation

- Lube Oil Viscosity
  - Select the oil viscosity (SAE grade) according to the ambient temperature prevailing at the time when the engine is started 4.1.2.
  - Keep shorter periods between oil changes when operating at temperatures below –10 °C (+14 °F), see 6.1.1.
- Diesel Fuel
  - Use winter-grade diesel fuel for operation below 0 °C (+32 °F), see 4.2.2.
- Coolant
  - Set the water / antifreeze mix to suit the lowest temperature likely to occur (max. –35 °C / –31 °F), see 4.3.1.
- Additional Maintenance Jobs
  - Drain the sludge from the fuel tank once a week (by undoing the sludge drain plug).
  - Adjust the oil filling in the oil bath air cleaner (if fitted) to the prevailing ambient temperature as in the case of engine oil.
  - At temperatures below –20 °C (–4 °F) lubricate the flywheel ring gear with low-temperature grease, e.g. Bosch FT 1 V31, from time to time through the pinion hole (if necessary remove starter).
- Cold-Starting Aids
  - At temperatures near or below freezing point start with flame-type heater plug, see 3.2.1.

    This not only lowers the starting limit temperature, but proves also useful at temperatures normally not requiring a starting aid.
- Battery
  - Cold starting requires a good state of charge of the battery, see 6.7.1.
  - The starting limit temperature can be lowered by 4-5 °C by heating the battery up to +20 °C (+65 °F). To do so, remove the battery and store in a warm place.

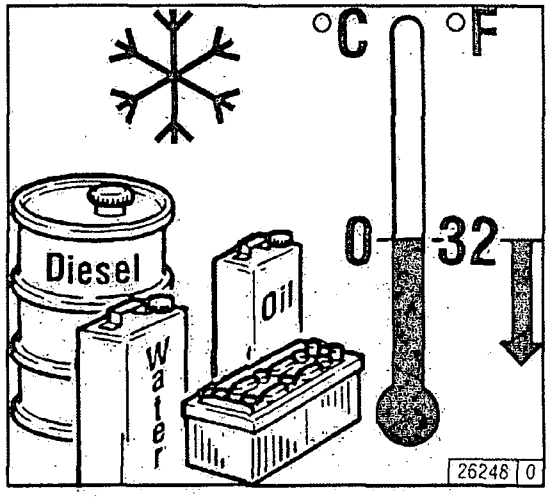

3

3.5.2 High Ambient Temperature, High Altitude

- With increasing altitude and rising ambient temperatures the density of the air. tends to decrease, which affects the maximum power output, the exhaust gas quality, the temperature level and in extreme cases, the starting behaviour. Under transient running conditions, operation is permissible at altitudes up to 1000 meters at ambient temperatures up to 30 °C (86 °F)

  If an engine is operated under more severe conditions (at higher altitudes or ambient temperatures) it will be necessary to reduce the injected fuel quantity and thus engine power.

- In case of doubt concerning such engine applications, ask your engine or equipment supplier whether, in the interest of operational reliabillty, service life and exhaust gas quality (smoke!), an engine derating had been considered necessary, or simply contact your service representative.

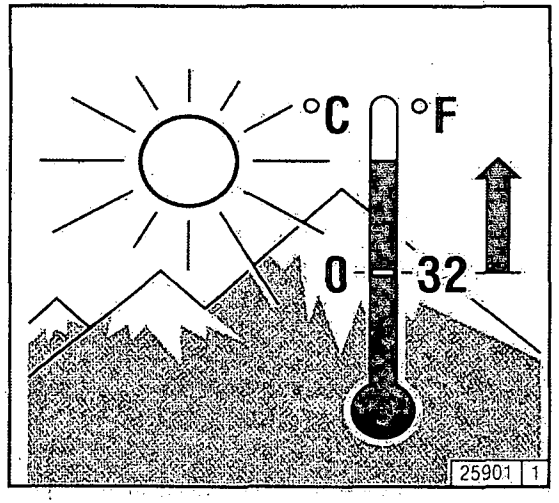

Operating Media

4

4.1 Lube Oil
4.2 Fuel
4.3 Coolant

Operating Media

4.1 Lube Oil

4

4.1.1 Quality Grade

The lube oil quality grade is defined by specifications. The following lube oil specifications are approved:

API Classification
American Petroleum Institute

- Turbocharged engines: CF-4 CG-4 CH-4

ACEA Classification
European Engine Oil Sequences.

- Turbocharged engines: E1- E3-96 + E4-98

4.1.2 Viscosity

The lube oil viscosity of the SAE grade is selected according to the viscosity diagram alongside.

The ambient temperature is decisive for the correct choice. Should the temperatures temporarily fall below the limits of the SAE grade selected, this will merely affect the starting performance, but will not cause any engine damage. The application limits should not be exceeded over lengthy periods of time in order to keep wear down to a minimum.

For all-year application you should use multi-grade oils.

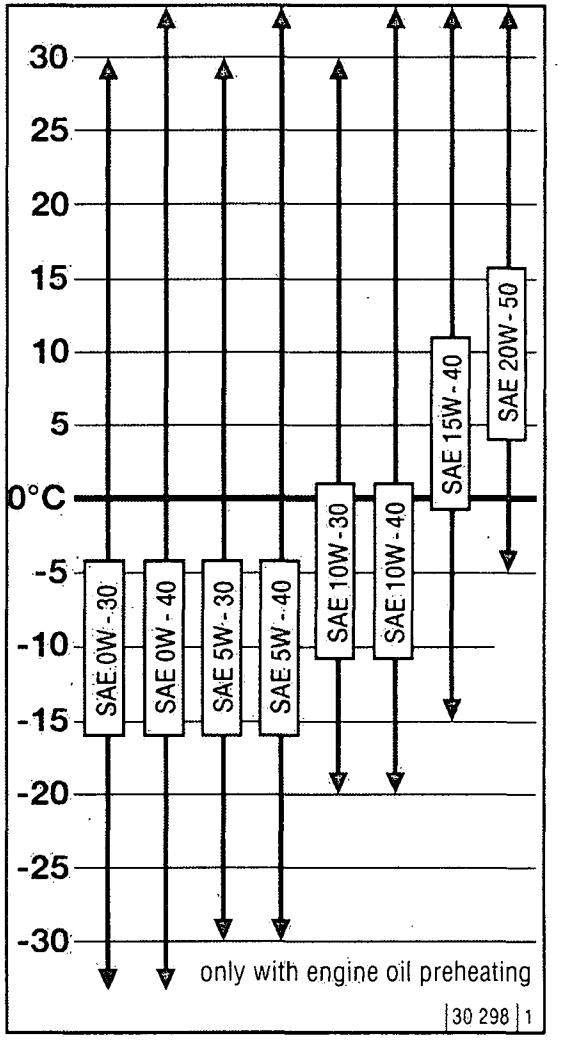

4.1 Lube Oil

4.1.2.1 Specific lube oil definitions

Turbocharged engines with uprated power and engines with high loading

The oils listed in enclosure 1 are to be used for the following engines and applications:

- 1015 CP
- all engines in CHP plants
- all engines in gensets operating in parallel with the mains/with each other
- engines in combines with:

These are high-grade oils according to ACEA or API. In addition most of these oils are partly synthetic, some even fully synthetic (5W-40) and thus achieve the thermal stability required for the relevant application and are distinguished by a low tendency to cause deposits in the turbocharger and in the charge air pipes with closed-circuit crankcase breather

Exhaust emission-optimized engines for commercial vehicles as from EURO II and mobile machinery as from level 2. For exhaust emission-optimized engines of all DEUTZ series which meet the following exhaust emission requirements:

a) as from EURO II the requirements of 88/77/EEC and 91/542/EEC
for commercial vehicles in Europe,
b) as from level 2 the requirements of 97/68/EC,
for mobile machinery in Europe
c) as from level 2 the requirements for US nonroad engines the following oil grades will be permissible:
- ACEA E3-96 and E4-98 for requirements a) and b)
- API CG-4 and CH-4 for application c)

Lube oils for engines with uprated power andengines with high loading			
Producer	**Type of lube oil**	**SAE class**	**Availability**
AGIP	Agip Sigma Ultra TFE	10W-40	worldwide
AGIP	Autol Valve Ultra FE	10W-40	Germany
ARAL GmbH	Aral MegaTurboral	10W-40	worldwide
ARAL GmbH	Aral SuperTurboral	5W-30	worldwide
BAYWA	BayWa Super Truck 1040 MC	10W-40	South Gemany
BAYWA	BayWa Turbo 4000	10W-40	South Gemany
Castrol GmbH	Castrol SYNTRUCK	5W-40	Europe, North America, Brazil Argentina, Australia, South Africa
Castrol GmbH	Castrol DYNAMAX	7,5W-40	Europe, North America, Brazil Argentina, Australia, South Africa
CHEVRON	Chevron Delo 400 Synthtic	5W-40	North America
ESSO	Essolube XTS 501	10W-40	Europe
FINA	FINA KAPPA FIRST	5W-30	Europe
FINA	FINA KAPPA ULTRA	10W-40	Europe
FUCHS DEA	DEA Cronos Synth	5W-40	Germany, Europe
FUCHS DEA	DEA Cronos Premium LD	10W-40	Germany, Europe
FUCHS DEA	Fuchs Titan Cargo MC	10W-40	worldwide
FUCHS DEA	Deutz Oel TLL 10W-40 MB	10W-40	Germany
FUCHS DEA	DEA Cronos Premium FX	10W-40	Europe
FUCHS DEA	Fuchs Titan Unic Plus MC	10W-40	worldwide
MOBIL OIL	Mobil Delvac 1 SHC	5W-40	Europe, SE Asia, Africa
MOBIL OIL	Mobil Delvac 1	5W-40	worldwide
MOBIL OIL	Mobil Delvac XHP Extra	10W-40	Europe, SE Asia
BP OIL International	BP Vanellus HT Extra	10W-40	Europe
Shell International	Shell Myrina TX /	5W-30	Europe, different
	Shell Rimula Ultra		description in some country
Shell International	Shell Myrina TX /	10W-40	Europe, different
	Shell Rimula Ultra		description in some country
TOTAL	TOTAL RUBIA TIR 86000	10W-40	worldwide
Schmierölraffinerie Salzbergen GmbH	Wintershall TFG	10W-40	Europe

The table will be extended as and when required.

Operating Media

4.2 Fuel

4

4.2.1 Quality Grade

Use commercial brands of diesel fuel with a sulfur content of less than 0.5%. If the sulfur content is higher than 0.5%, oil change intervals should be reduced, see 6.1.1.

The following specifications / standards are approved:

- CEN EN 590 or DIN/EN 590
- DIN 51 601 (Feb.1986)
- BS 2869 (1988): A1 and A2
- ASTM D975-88: 1-D and 2-D
- NATO Code F-54 and F-75

The exhaust emission levels determined during certification always refer to the reference fuel specified by the supervising authorities for such certification.

4.2.2 Winter-Grade Fuel

At low temperatures, waxing may occur and clog the fuel system, causing operational trouble. In case of sub-zero (+32 °F) ambient temperatures it is recommended to use winter-grade diesel fuel (down to –15 °C = +5 °F). Normally, such fuel is offered at the filling stations in good time before the cold season starts. Diesel fuel containing additives („Super Diesel") is frequently also on sale for use at temperatures down to –20 °C (–4 °F).

- At temperatures below –15 °C (+5 °F) or –20 °C (–4 °F), kerosene should be added to the diesel fuel. The relevant percentages are given in the diagram at the right.

If summer-grade diesel fuel has to be used at temperatures below zero (+32 °F), up to 60% kerosene may be added (see diagram at the right).

In most cases, adequate resistance to cold is also attained by adding a flow improver (fuel additive). Ask your service representative for this.

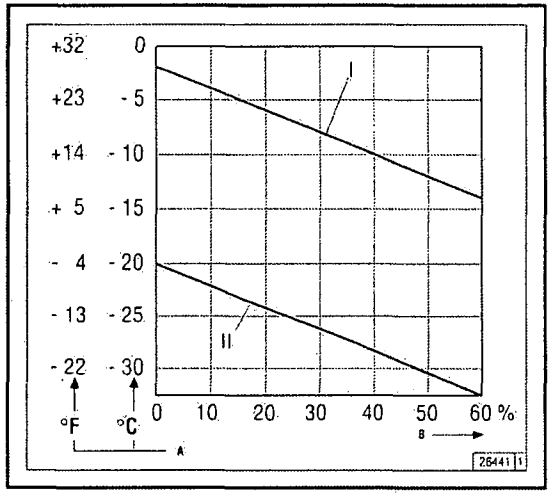

Illustration legend:	
I	Summer diesel fuel
II	Winter diesel fuel
A	Ambient temperature
B	Percentage of kerosene added

Diesel fuels must never be mixed with petrol (normal and super grade petrol)!

Mix in tank only! Fill in the appropriate amount of kerosene first, then add the diesel fuel.

4.3 Coolant

4.3.1 Quality of water for coolant in the recirculating water system

The values listed below must not be exceeded.
In order to examine the quality of your water, a test case can be ordered from DEUTZ under Order No. 1213 0382.

Water quality	min	max
ph value at 20 °C	6.5	8.5
Chloride ion content	-	100
Sulphate ion content	-	100
Total hardness	3	20

4.3.2 Coolant treatment

In the case of liquid-cooled engines, special attention must be paid to the treatment and control of the coolant, as the engine may otherwise become damaged as a result of corrosion, cavitation and freezing.
The treatment of the coolant is carried out by adding a cooling system protectant to the cooling water.
The cooling system must be continuously monitored, see 5.1. In addition to checking the coolant level, this also involves checking the concentration of the cooling system protectant.
The cooling system protectant concentration can be checked with commercially available testers (example: gefo glycomat®).

If nitrite-based cooling system protectants are mixed with **amine-based** agents, dangerous **nitrosamines** are formed.

4.3.3 Cooling system protectants

DEUTZ cooling system protectants must be purchased *in drums under Order No. 01011490 (5 litres) or 1221* 1500 (210 litres). These are nitrite, amine and phosphate-free, and provide effective protection against corrosion, cavitation and freezing.
If the above-mentioned cooling system protectant is unavailable, the following products may be used in exceptional cases.

Manufacturer	Product designation
AVIA	AVIA Antifreeze Extra
ARAL	Antifreeze Extra
BASF	Glysantin G 48
DEA	DEA kylarfrostsskydd
SHELL	SHELLGlycoShell

The cooling system protectant in the coolant should not *fall below or exceed the following concentration:*

Cooling system protectant	Water
max. 45 Vol.%	55%
min. 35 Vol.%	65%

Filling volume, see Chapter 9.1.
The use of other cooling system protectants, e.g. chemical anti-corrosion agents, is possible in exceptional cases. Consult DEUTZ Service.
The use of anti-corrosion oils is not permitted.

Cooling system protectants must be disposed of in an environmentally-friendly manner.

Operating Media

4.3 Coolant

4

Cooling System Protection

Protective agent [% by vol.]	Protection against freezing to [°C]	Cooling system capacity *) [Liters]							
		18	20	22	25	27	30	32	35
		Protective agent [Liters]							
35	–22	6,3	7,0	7,7	8,75	9,5	10,5	11,2	12,3
40	–28	7,2	8,0	8,8	10	10,8	12	12,8	14
45	–35	8,1	9,0	9,9	11,3	12,2	13,5	14,4	15,8
50	–45	9,0	10	11	12,5	13,5	15	16	17,5

*) For coolant capacity of your engine, see Section 9.1.
Note: Consult head-office regarding figures in the grey field.

Routine Maintenance

5

5.1 Maintenance Schedule
5.2 Maintenance Chart
5.3 Completed Maintenance Jobs

Routine Maintenance

5.1 Maintenance Schedule

5

In Running Hours (Bh)1 every									check / clean / renew	Job	see section
once after 2) 50–150	every 10 Bh or daily	125	250	500	1000	2000					
	●								●	Oil level 9)	6.1.2/ 3.3.4
●									●	Visual inspection of engine for leaks	
	●								●	Oil bath and dry-type air cleaners 3) 4)	6.4.3 /6.4.4
			●						●	Battery and battery cable connections	6.7.1
		●	●	●	●	●			●	Cooling system (dep. on engine use) 3) 8)	6.3.1/6.3.2
		●	●	●	●	●			●	Drain holes in V-space 8)	6.3.1/6.3.4.
●			●	●					●	Engine oil (dep. on engine use) 5)	6.1.1/ 6.1.2
●			●	●					●	Oil filter cartridge	6.1.3
●					●				●	Fuel filter cartridge	6.2.1
●					●				●	Valve clearances (readjust if necessary)	6.6.1
●				●					●	Engine mounts (retighten if necessary)	9.2
●				●					●	V-belts (retension if necessary)	6.5.1
						●			● ●	Alarm system	3.3
●					●				●	Fuel prefilter	4.2
●									●	Fastening	9.2
●					●				●	Flame-type heater plug system 4)	
						● 7)			●	Coolant 6)	6.3.2/ 6.3.3
				●					●	Coolant additive concentration	4.3.2/ 4.3.3
				●					●	Coolant level	3.1.4/ 3.3.3
					●				●	Hoses / clamps	

The specified engine maintenance times are maximum values. Depending on the operating environment, shorter maintenance intervals may be required. Please observe the operating instructions of the equipment manufacturer.

1) Max. permissible guide intervals
2) After commissioning of new or overhauled engines
3) Clean if necessary, see Section 6.3
4) Renew if necessary
Service acc. to service indicator if provided
5) For oil change intervals, see Section 6.1.1
6) Check additive concentration every 500h (antifreeze or chemical corrosion inhibitor)
7) or renew every 2 years
8) System cleaning
9) During run-in period, check 2x daily

5.2 Maintenance Chart

The maintenance chart shown here is supplied as self-adhesive label with each engine. It should be affixed where it can be clearly seen on the engine or driven equipment.

Check that this is the case!

If necessary, ask your engine or equipment supplier for a fresh supply of labels!

Routine maintenance work should be carried out according to the schedule in 5.1.

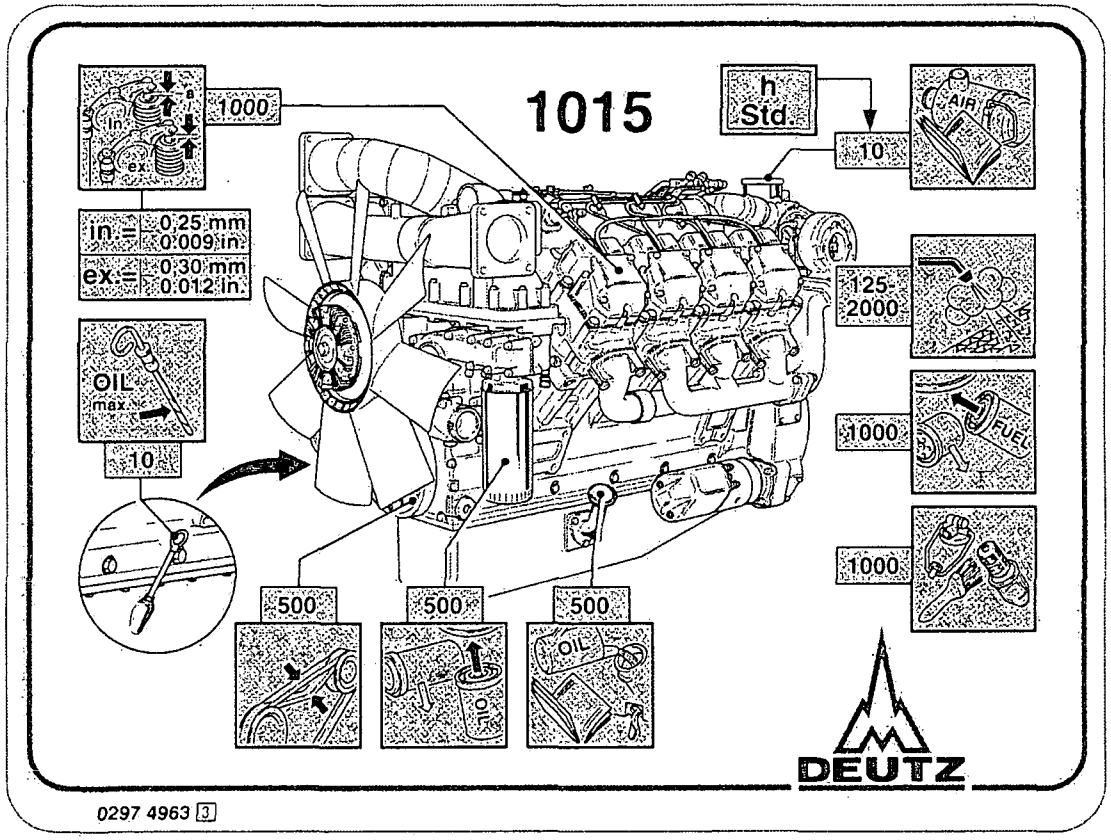

Stop the engine before carrying out any maintenance work.

Routine Maintenance

5.3 Completed Maintenance Jobs

5

Running hours	Date	Signature / Stamp	Running hours	Date	Signature / Stamp
50-150*			–		
125			250		
375			500		
625			750		
875			1000		
1125			1250		
1375			1500		
1625			1750		
1875			2000		
2115			2250		
2375			2500		
2625			2750		

* after commissioning of new and overhauled engines

Duly completed maintenance jobs can be recorded and signed off in the above table.

5.3 Completed Maintenance Jobs

Running hours	Date	Signature / Stamp	Running hours	Date	Signature / Stamp
2875			3000		
3125			3250		
3375			3500		
3625			3750		
3875			4000		
4125			4250		
4375			4500		
4625			4750		
4875			5000		
5125			5250		
5375			5500		
5625			5750		

Duly completed maintenance jobs can be recorded and signed off in the above table.

Routine Maintenance

5.3 Completed Maintenance Jobs

5

Running hours	Date	Signature / Stamp	Running hours	Date	Signature / Stamp
5875			6000		
6125			6250		
6375			6500		
6625			6750		
6875			7000		
7125			7250		
7375			7500		
7625			7750		
7825			8000		
8125			8250		
8375			8500		
8625			8750		

Duly completed maintenance jobs can be recorded and signed off in the above table.

5.3 Completed Maintenance Jobs

Running hours	Date	Signature / Stamp	Running hours	Date	Signature / Stamp
8875			9000		
8125			8250		
8375			8500		
8625			8750		
8875			9000		
9125			9250		
9375			9500		
9625			9750		
9825			10000		
10125			10250		
10375			10500		
10625			10750		

Duly completed maintenance jobs can be recorded and signed off in the above table.

Routine Maintenance

5.3 Completed Maintenance Jobs

5

Running hours	Date	Signature / Stamp	Running hours	Date	Signature / Stamp
10875			11000		
11125			11250		
11375			11500		
11625			11750		
11875			12000		
12125			12250		
12375			12500		
12625			12750		
12825			13000		
13125			13250		
13375			13500		
13625			13750		

Duly completed maintenance jobs can be recorded and signed off in the above table.

5.3 Completed Maintenance Jobs

Running hours	Date	Signature / Stamp	Running hours	Date	Signature / Stamp
13875			14000		
14125			14250		
14375			14500		
14625			14750		
14875			15000		
15125			15250		
15375			15500		
15625			15750		
15825			16000		
16125			16250		
16375			16500		
16625			16750		

Duly completed maintenance jobs can be recorded and signed off in the above table.

Service and Maintenance

6

6.1 Lubrication System
6.2 Fuel System
6.3 Cooling System
6.4 Combustion Air Cleaner
6.5 Belt Drives
6.6 Adjustments
6.7 Accessories

Service and Maintenance

6.1 Lubrication System

6

6.1.1 Oil Change Intervals

- The first oil change after commissioning or recommissioning following repair work is carried out after 50 running hours.
- The oil change intervals are dependent on :
  - Lube oil quality
  - Sulfur content in the fuel
  - Engine application
- Should, within a year, the engine run less than the hours stated in the table, the oil must be changed at least once a year.
- The table refers to the following conditions:
  - For diesel fuel max. sulfur content > 0.5 % by wt.
  - Continuous ambient temperature down to –10 °C (+14 °F)
- If the sulfur content is > 0.5 to > 1 % or the continuous ambient temperature below –10 °C (+14 °F), the intervals between the oil changes should be halved.
- In the case of fuels containing sulfur > 1 % , ask your service representative.

Equipment engines			Oil Change Intervals (running hours)	
			Moteurs suralimentés	
Oil Grade	API - Klassifikation		CF-4	CG-4/ CH-4
	ACEA- Klassifikation		E1+E2–96	E3–96/ E4-98
Light duty, e.g.: Road vehicles, cranes, construction equipment, rail traction units, ships, generating sets, pumps			250	500
Heavy duty, e.g.: Combine harvesters, underground mining, road sweepers, winter service equipment, emergency sets, emergency pumps			125	250
Equipment engines			Oil Cange Intervals (km)	
			Moteurs suralimentés	
Qualité d'huile	API - Klassifikation		CF-4	CG-4/ CH-4
	ACEA- Klassifikation		E1+E2–96	E3–96/ E4-98
Service Group	Annual Performance (km)	Mean Driving Speed approx. (km/h)		
I	< 30 000	20	5 000	10 000
II	> 30 000 < 100 000	40	10 000	20 000
III	>100 000	60	15 000	30 000

Change the oil with the engine off but still warm (lube oil temperature approx. 80 °C / 176 °F).

6.1.2 Checking Oil Level / Changing Engine Oil

6.1.2.1 Checking Oil Level

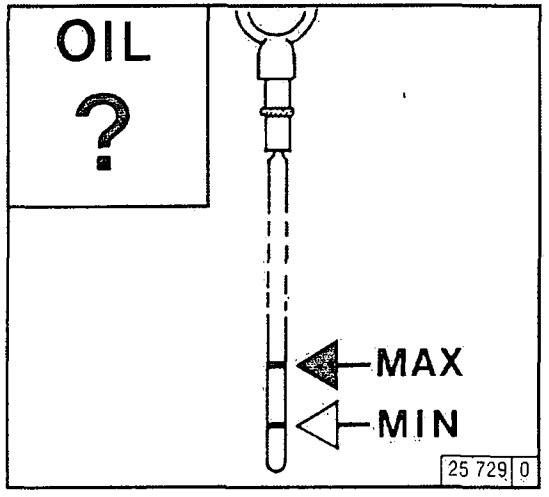

- Ensure that the engine or vehicle is on a level surface.
- Immediately before the oil level is measured, the engine should should be driven at low idling speed for approx. 2 minutes.
- Switch off the engine.
- Pull out the oil dipstick.
- Wipe off with a non-fibrous, clean cloth.
- Insert up to the stop and pull out again.
- Check the oil level and if necessary fill up to the "**MAX**" level.
  - If the oil level is just above the "**MIN**" marking, extra oil must be added.

The oil level must not fall below the "**MIN**" marking.

6.1.2.2 Engine Oil Change

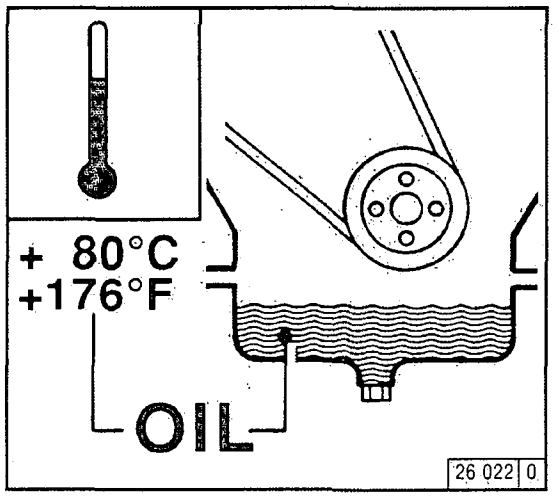

- Ensure that the engine or vehicle is on a level surface.
- Allow the engine to warm up
  - Lube oil temperature approx. 80°C.
- Switch off the engine.

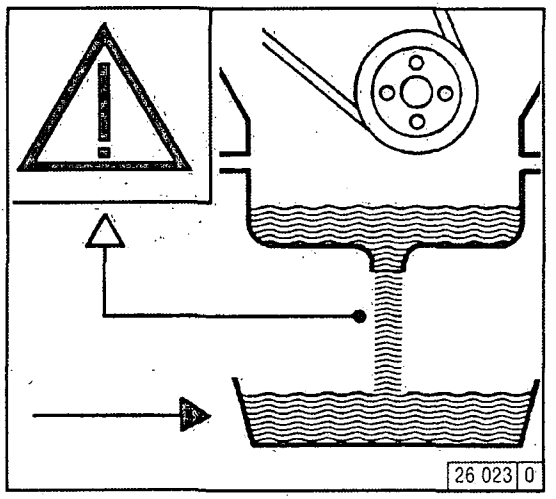

- Place oil tray under the engine.
- Unscrew drain plug.
- Drain oil.
- Fit oil drain plug, with the new gasket and tighten firmly (for torque, see 9.2).
- Fill with lube oil.
  - For grade / viscosity, see 4.1
  - For quantity, see 9.1
- Check oil level, see 6.1.2.1

Be careful when draining hot oil – danger of scalds! Do not let used oil run into the soil but catch it in a container ready for

Service and Maintenance

6.1 Lubrication System

6

6.1.3 Renewing Oil Filter

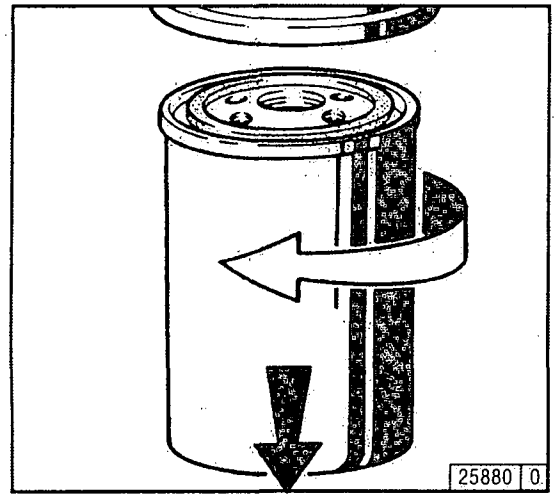

- With fitted torsion lock:
  Loosen screws and slide clamps downwards.
- Undo the oil filter cartridge with commercial tool and spin off.
- Catch any escaping oil.

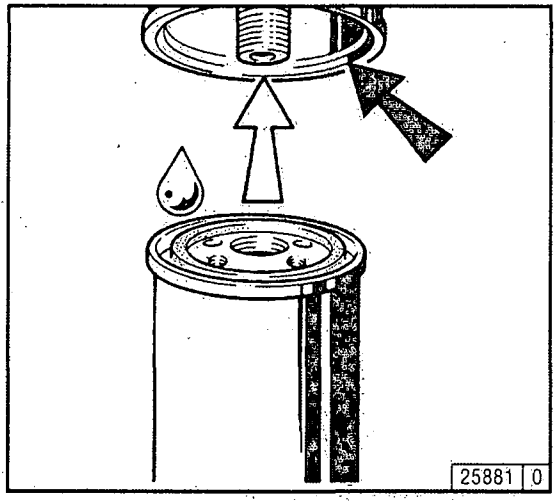

- Clean sealing surface of the filter carrier if necessary.
- Lightly oil the rubber gasket of the new oil filter cartridge.
- Screw in the new cartridge finger tight against the gasket.

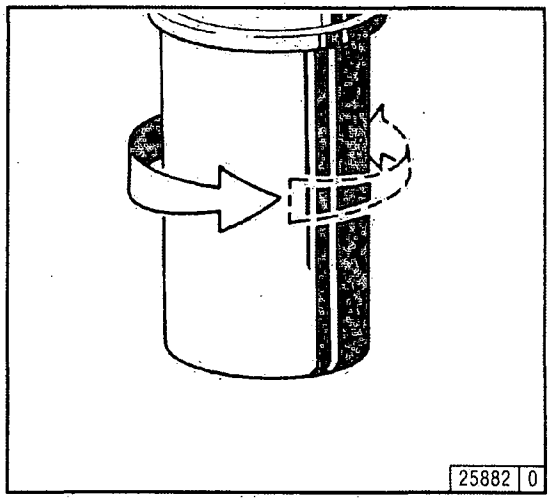

- Tighten oil filter cartridge tightly by giving a final half turn.
- If a torsion lock is fitted, slide clamps up into position and tighten screws.
- Check oil level, see 6.1.2.
- Check oil pressure, see 3.3.1.
- Check sealing of oil filter cartridge for leaks.

Beware of hot oil:
Danger of scalding!

6.2 Fuel System

Service and Maintenance

6

6.2.1 Renewing Fuel Filter

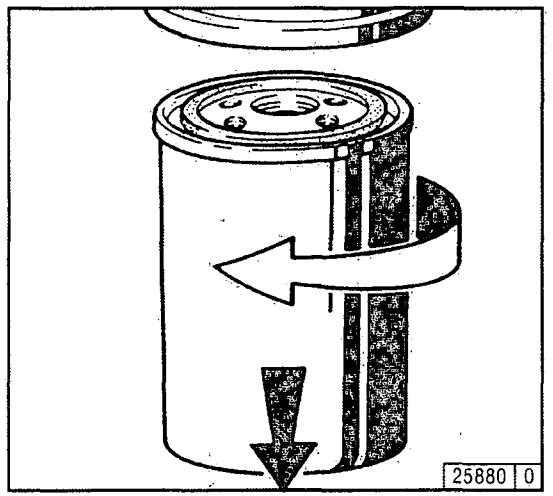

- Close fuel stopcock.
- Undo fuel filter cartridge with commercial tool and spin off.
- Catch any escaping fuel.

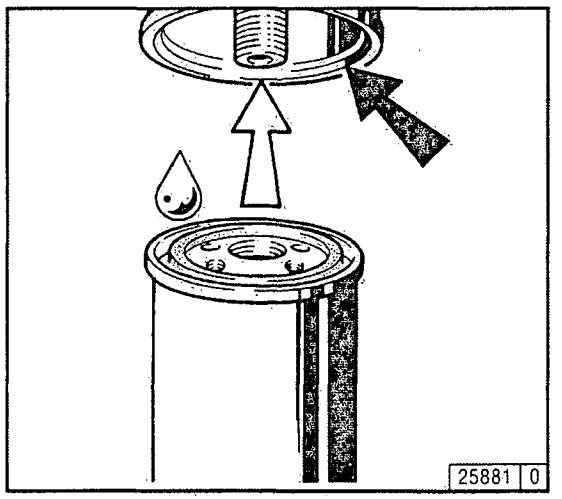

- Clean sealing surface of filter carrier if necessary.
- Apply light film of oil or diesel fuel to rubber gasket of new fuel filter cartridge.
- Screw in the cartridge finger tight against the gasket.

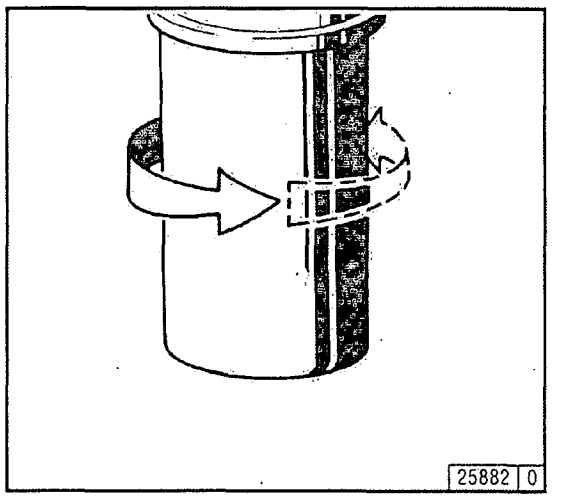

- Tighten fuel filter cartridge firmly.
- Open fuel stopcock.
- Check for leaks.

When working on the fuel system, keep open flames away!

Do not smoke!

Bleeding of the fuel system is not necessary.

Service and Maintenance

6.2 Fuel system

6

6.2.2 Replace fuel oil leak line

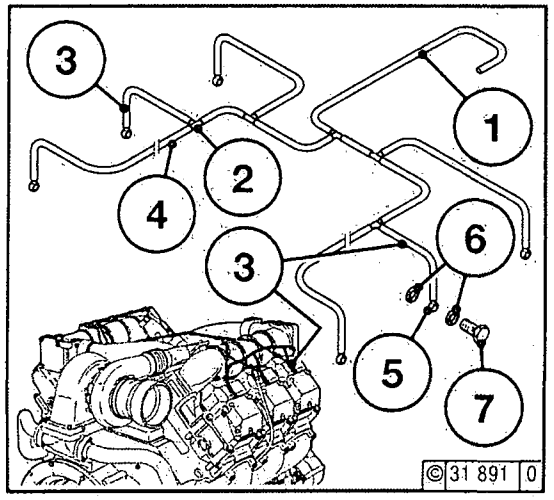

- Close the fuel shut-off valve.
- Remove valve cover.
- Loosen and remove banjo bolts 7.
- Remove rubber hoses 1, 3, 4, unions 2 and O-rings 6 and dispose of in accordance with environmental regulations; banjo union 5 and banjo bolt 7 can be re-used.
- Connect new oil leak line (complete) with banjo union 5 to rubber hoses.
  Fasten oil leak line using existing banjo bolt 7 and two new O-rings 6.
- Re-fit valve cover.
- Open fuel shut-off valve.
- Check for leaks after start-up.

6.3 Cooling System

Service and Maintenance

6

6.3.1 Cleaning Intervals

- The degree of soiling of the cooler units is dependent on the type of engine application.
- The danger of soiling is increased due to residues of oil and fuel on the engine. Check extra carefully, therefore, for leakages when applications involve high dust fallout.
- More severe soiling can occur, e.g. in the case of:
  - Construction site application due to heavily dust-laden air.
- In view of the varying conditions of application, the cleaning intervals must be determined from case to case. The cleaning intervals stated in the table can be taken as guide values.

Checking / Cleaning Intervals	
Guide Values (RH)	Engine Application
2000	Ships, gensets in enclosed spaces, pumps
1000	Vehicles on paved roads
500	Mobile gensets
250	Vehicles on construction sites and unpaved roads, Construction equipment, compressors, underground mining equipment
125	Farm equipment

6.3.2 Draining Cooling System

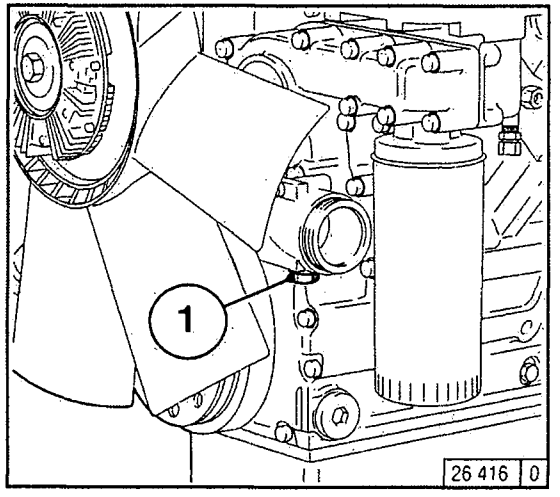

- Place tray under drain plug 1.
- Remove drain plug 1 and sealing ring below coolant inlet.
- Drain coolant.
- Filling / bleeding as under 6.3.3
- Screw on drain plug 1 with new sealing ring and tighten (see 9.2).
- Check for leaks.

Be careful when draining hot coolant. Danger of scalding!
Catch drained coolant and dispose of in accordance with anti-pollution regulations!

6.3.3 Filling / Bleeding Cooling System

- Fill with coolant and bleed cooling system according to manufacturer's instructions.

Service and Maintenance

6.3 Cooling System

6

6.3.4 Cleaning engine

- with compressed air

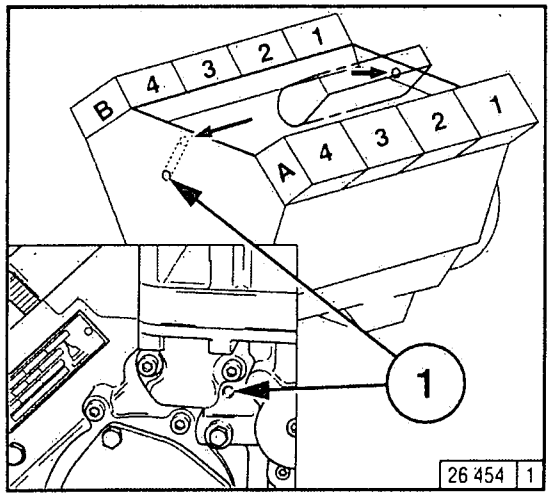

- Blow compressed air onto engine
  Wash out loosened dirt particles from V-space with water jet.
- Make sure that drain holes 1 of V-space are free.

- with cold cleaning agent

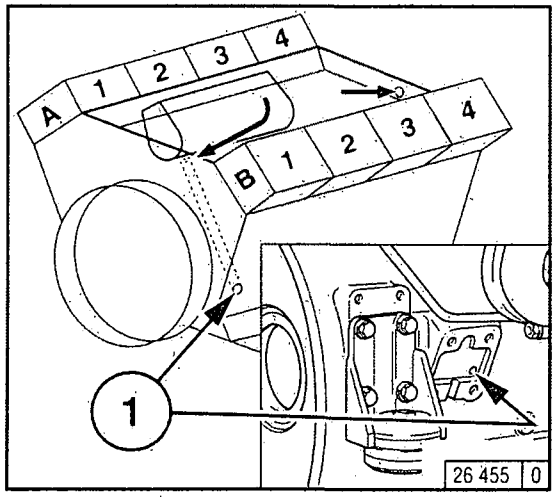

- Spray engine with commercial cold cleansing agent and let stand for about 10 min.
- Then spray clean with strong water jet (do not spray water directly onto sensitive components such as alternator, starter, wiring, electronic components).
- Make sure that drain holes 1 of V-space are free.
- Let engine run up to operating temperature after each wet-cleaning procedure allowing any remaining water to evaporate, thus avoiding corrosion.

Clean only with engine stationary

6.4 Combustion Air Cleaner

6.4.1 Cleaning Intervals

- The degree of soiling of the combustion air cleaner depends on the amount of dust contained in the air and the size of the filter used. If very dusty air is to be expected, a cyclone-type precleaner can be fitted to the air cleaner.
- Consequently, the cleaning intervals cannot be fixed generally, but have to be determined from case to case.
- When a dry-type air cleaner is used, when indicated by the service indicator or switch.
- Air cleaner servicing is needed when :
  - **Service Indicator**
    the red sector 1 is fully visible when the engine is off.
  - **Service Switch**
    the yellow pilot light comes on when the engine is running.
- After having carried out service work, reset the signal by pressing the button of the service indicator. The service indicator is ready to resume its function.

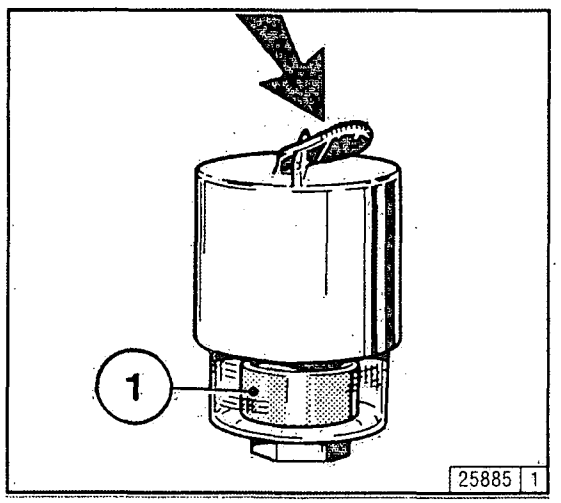

Service and Maintenance

6.4 Combustion Air Cleaner

6

6.4.2 Dry-Type Air Cleaner

Dust Discharge Valve

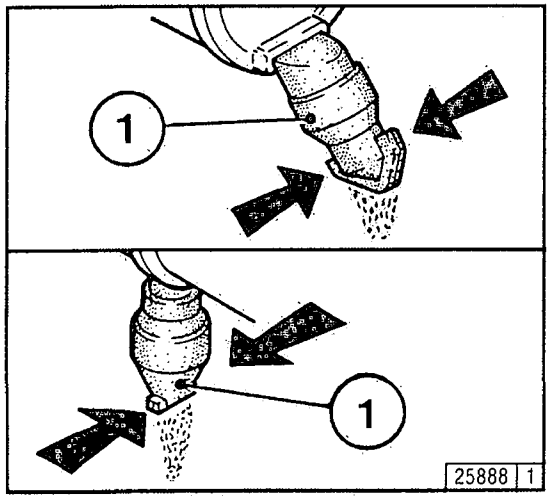

- Empty dust discharge valve 1 by pressing apart lips of discharge slot as indicated by the arrows.
- Clean discharge slot from time to time.
- Remove any caked dirt by pressing together the upper section of the valve.

Filter Cartridge

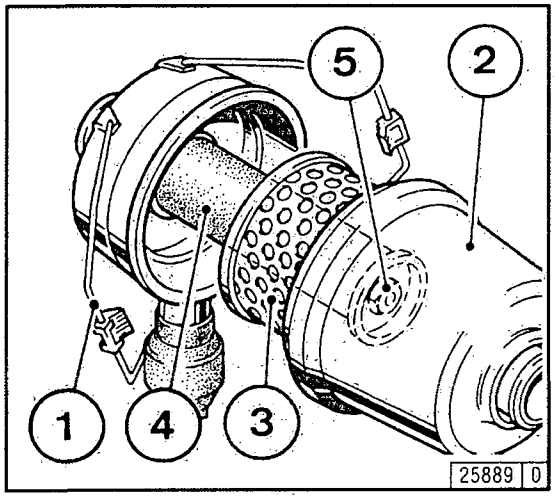

- Release fastening clamps 1.
- Take off hood 2 and remove cartridge 3.
- Clean cartridge, replace at least once a year.
- Clean cartridge 3:
  - blow through with dry compressed air (max. 5 bar) from inside to outside, or
  - in difficult cases, tap out, taking care not to damage the cartridge, or
  - wash out according to manufacturer's instructions.
- Check cartridge for damage to filter paper (by shining the paper through with a light), and inspect sealing element. Renew if necessaray.
- After having serviced the filter cartridge five times, or after two years at the latest, renew safety cartridge 4 (never clean!).

  To do this, proceed as follows:
  - Undo hex. nut 5 and remove cartridge 4.
  - Insert new cartridge, insert and tighten hex. nut.
- Install cartridge 3, place hood 2 back in position and secure fastening clamps 1.

Never clean filter cartridge with petrol (gasoline) or hot liquids!

6.4 Combustion Air Cleaner

6.4.3 Emptying Cyclone-Type Precleaner

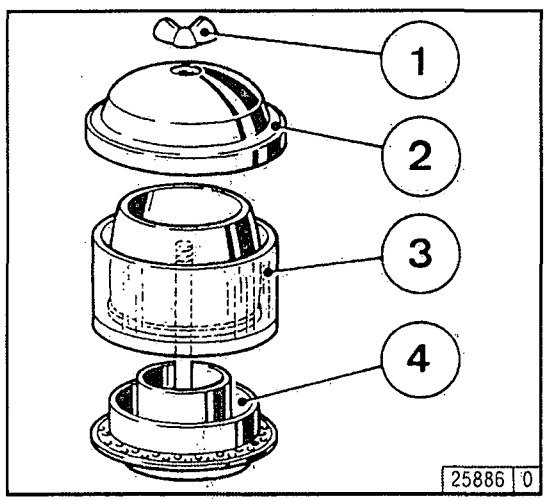

- Undo wing nut 1 and remove cover 2.
- Remove collector bowl 3 from lower section 4 and empty. Remove leaves, straw and other foreign matter from lower section of precleaner.
- Reposition collector bowl 3 onto lower section 4, fasten cover 2 in place by tightening wing nut 1.

6.4.4 Cleaning Oil Bath Air Cleaner

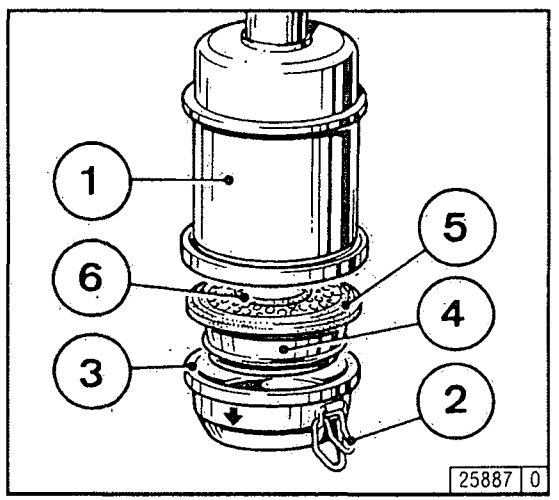

- Turn engine off and wait about 10 minutes for the oil to drain from filter housing 1.
- Release snap clips 2 and remove oil cup 3 together with filter element 4. If necessary, press element out with a screwdriver, taking care not to damage rubber gasket 5.
- Remove dirty oil and sludge. Clean oil cup.
- Clean filter element 4 in diesel fuel and allow to drip-dry.
- Clean filter housing 1 if very dirty.
- Inspect and replace rubber gaskets 5 and 6 if necessary.
- Fill oil cup with engine oil up to the mark (arrow) (for viscosity, see 4.1.2).
- Refit oil cup and element to filter housing and secure with snap clips.

Never clean air cleaner with petrol (gasoline)!

Dispose of old oil in accorrdance with anti-pollution regulations!

Service and Maintenance

6.5 Belt Drives

6

6.5.1 Checking Alternator V-Belt

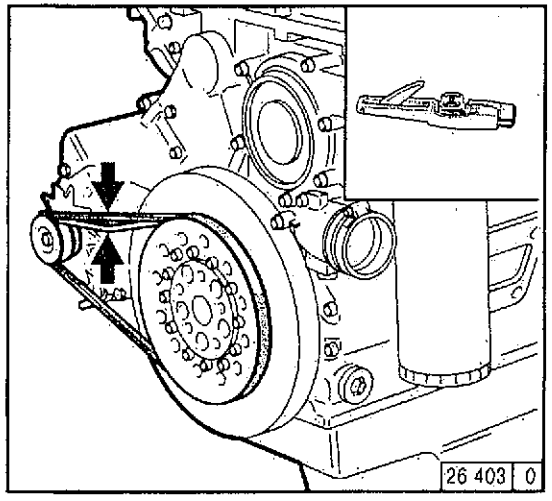

Checking

- Inspect entire V-belt for damage
- Renew damaged V-belts.
- After installing new belts, run engine for 15 minutes, then check belt tension.
- Use a belt tension gauge (see 9.3) to check belt tension.
  - Place indicator arm 1 into gauge.
  - Position gauge on V-belt 2, midway between the pulleys, with flange 3 on bottom of gauge against the edge of belt.

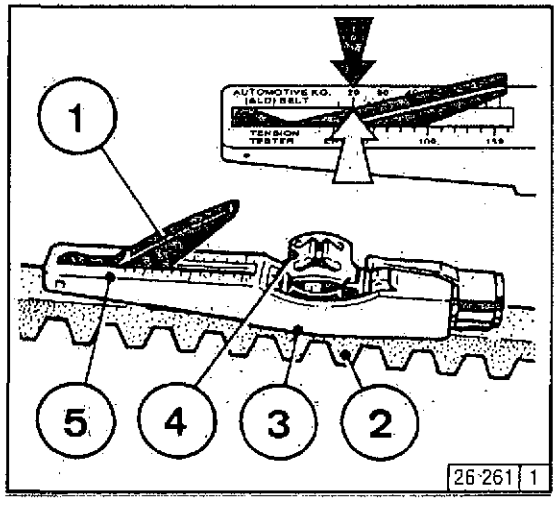

- Press slowly on the black pad 4 at right angles to belt 2 until the spring is heard or felt to trigger.
- Carefully remove the gauge without altering the position of the indicator arm 1.
- Read off the value: Turn the gauge sideways to see the exact spot where the top of the black indicator arm 1 intersects scale 5 (arrow). For settings, see 9.1.
- If necessary, retension belt and measure again.

Check / retension and renew V-belts only with the engine off. Refit belt guard, if provided.

6.5.2 Retensioning / Renewing Alternator V-Belt

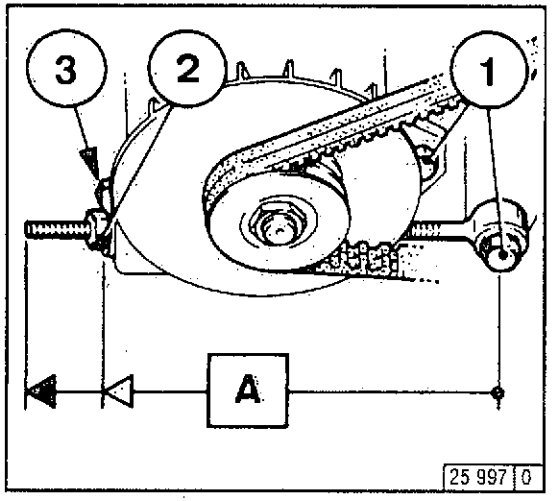

Retensioning

- Slacken hex. bolts 1, 2 and 3.
- Turn lock nut 2 in direction **A** until correct V-belt tension is attained.
- Tighten bolts 1, 2 and 3.

6.5 Belt Drives

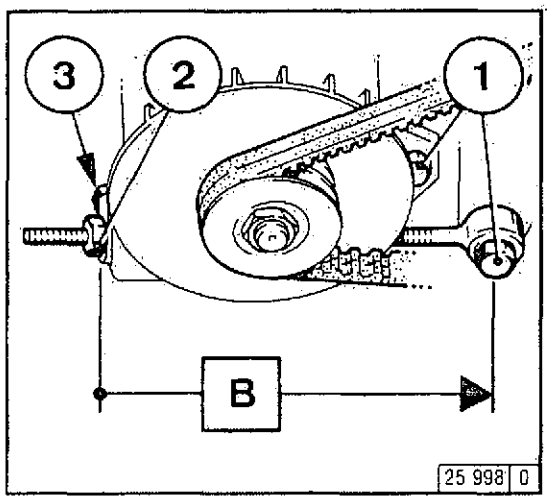

Renewing

- Slacken hex. bolts 1, 2 and 3.
- Turn lock nut 2 in direction B as far as it will go. Now the new V-belt can be easily placed in position..
- Tighten bolts 1, 2 and 3 until correct V-belt tension is attained (see Section 6.5.1).

Service and Maintenance

6.6 Adjustments

6.6.1 Checking / Adjusting Valve Clearances

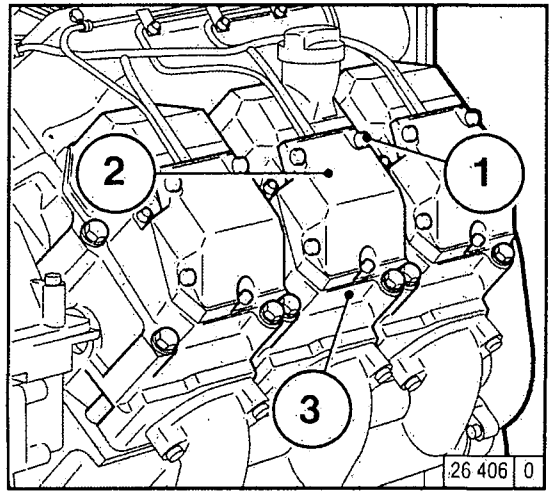

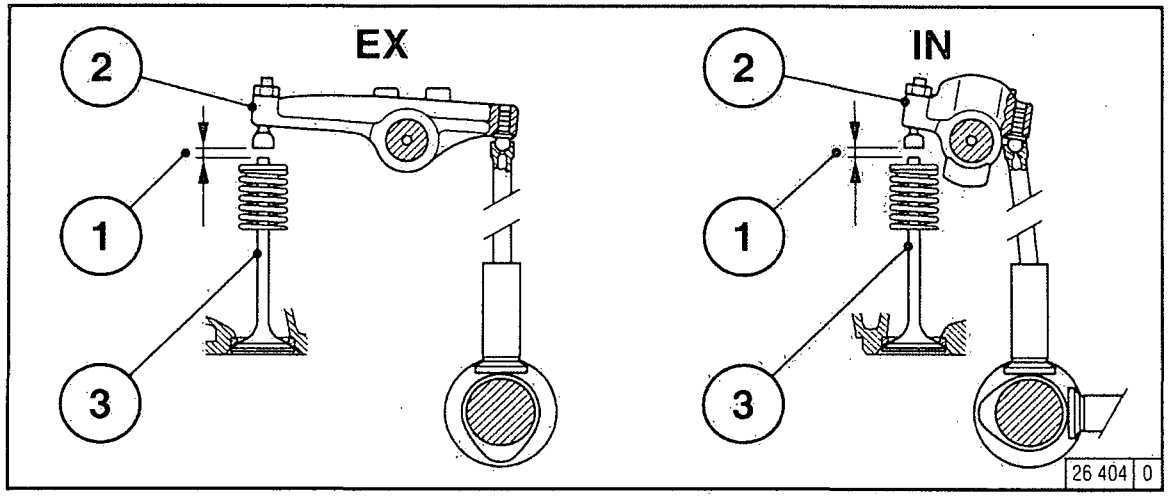

- Before adjusting valve clearance, allow engine to cool down for at least 30 minutes. The oil temperature should be below 80 °C (176 °F).
- Position crankshaft as per schematic, see 6.6.1.1.
- Slacken bolts 1.
- Remove rocker cover 2 together with gasket 3.
- Check valve clearance 1 between rocker arm/ tappet contact face 2 and valve stem 3 with feeler gauge (there should only be a slight resistance when feeler blade is inserted).

  For permissible valve clearance, see 9.1.

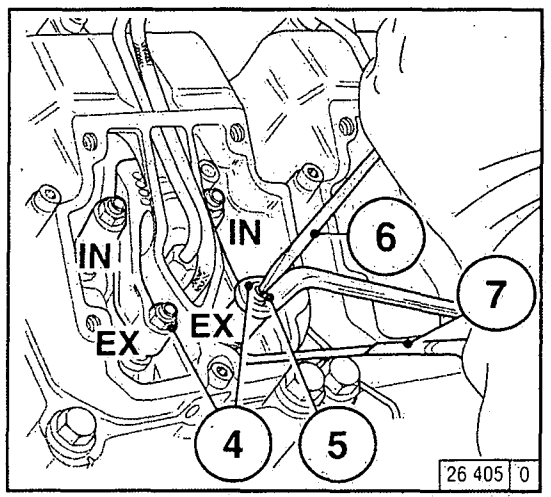

- If necessary, adjust valve clearance as follows:
  - Loosen lock nut 4 using wrench 7.
  - Adjust set screw 5 by means of screwdriver 6 in such a manner that with lock nut 4 tightened (wrench), the correct valve clearance 1 is attained.
- Check the valve clearances at each of the remaining cylinders and adjust if necessary.
- Refit rocker cover (together with new gasket if necessary).

Service and Maintenance

6.6 Adjustments

6

6.6.1.1 Valve Clearance Adjustment Schematic

Firing Order BF6M 1015:
A1 – B3 – A3 – B2 – A2 – B1

Firing Order BF8M 1015:
A1 – B4 – A4 – B1 – B3 – A3 – B2 – A2

Sequence	1	2	3	4	5	6		1	2	3	4	5	6	7	8
Valve overlap	A1	B3	A3	B2	A2	B1	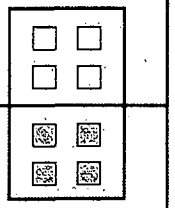	A1	B4	A4	B1	B3	A3	B2	A2
Adjusting	B2	A2	B1	A1	B3	A3		B3	A3	B2	A2	A1	B4	A4	B1

6.6 Adjustments

Service and Maintenance

6

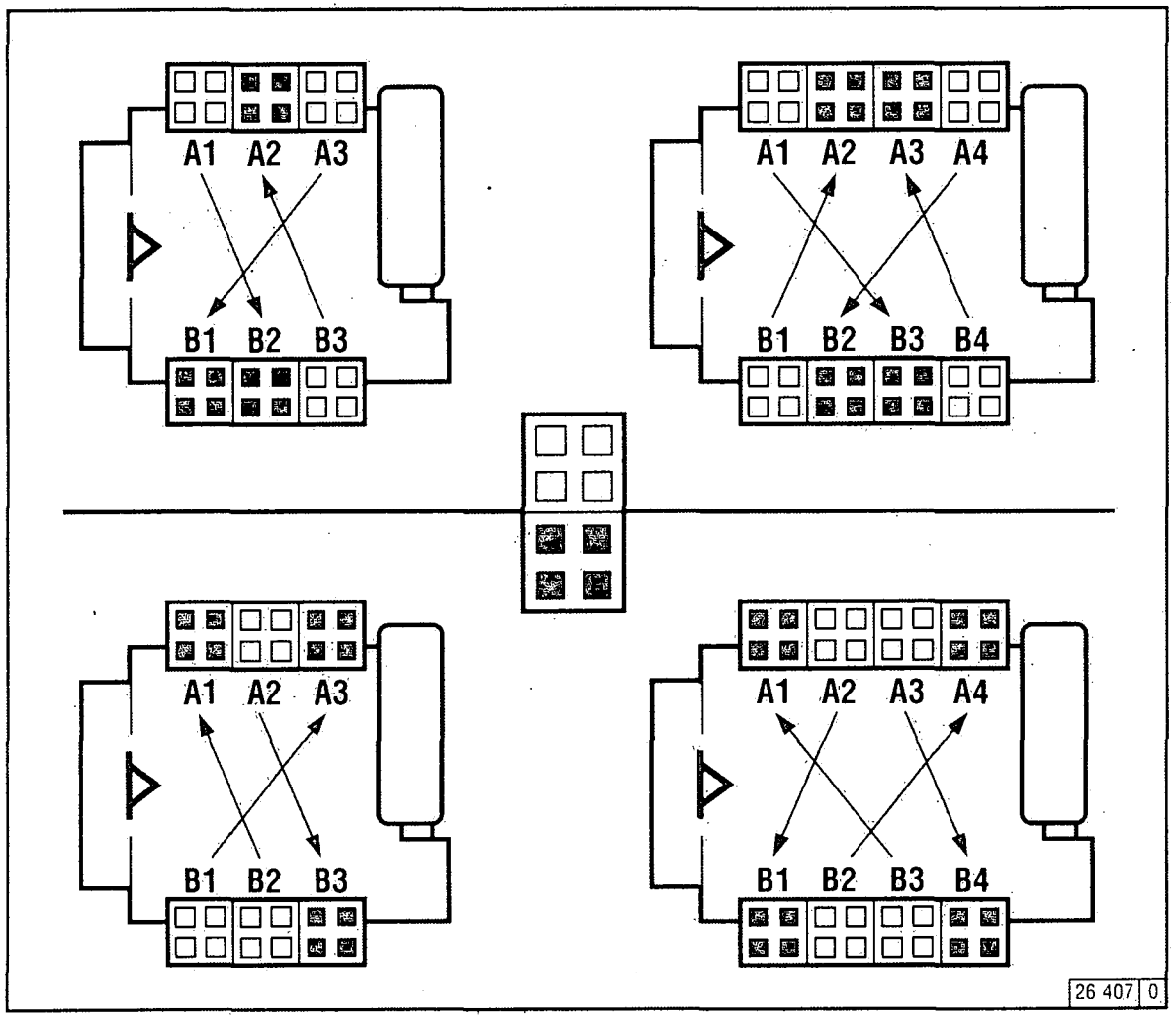

Adjustment

Turn crankshaft according to sequence shown in the diagram (starting with cyl. **1**).

The valves of the relevant cylinder overlap, **marked in white,** (exhaust valves about to close, inlet valves about to open). Adjust clearance of valves, **marked in black,** according to schematic. Mark the respective rocker arm with chalk to show that the adjustment has been done.

Service and Maintenance

6.7 Accessories

6

6.7.1 Battery

6.7.1.1 Checking Battery and Cable Connections

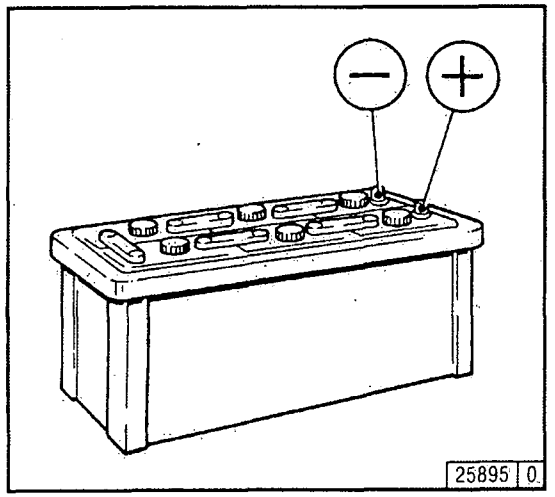

- Keep battery clean and dry.
- Undo soiled terminals.
- Clean battery plus and minus poles and terminals and apply a film of acid-free and acid-resistant grease.
- When reconnecting, ensure good contact of terminals. Fasten clamping bolts finger tight.

6.7.1.2 Checking Electrolyte Level

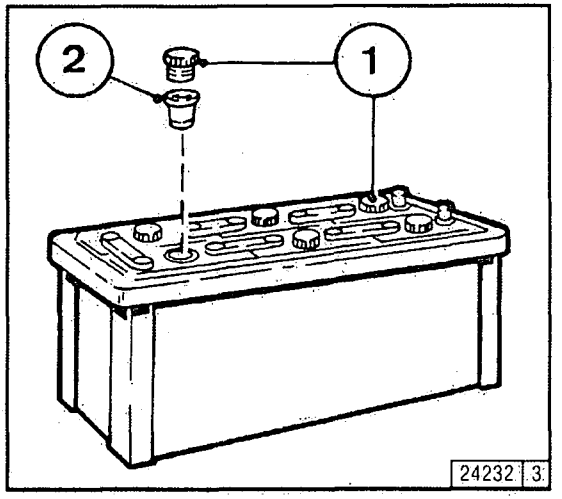

- Remove cell caps 1.
- If electrolyte test elements 2 are fitted:
  The level should be high enough to wet the bottom of these.
- If no such elements are provided :
  Check to make sure that the level is 10-15 mm above the top edge of the plates.
- Top up with distilled water if necessary.
- Fit cell caps back in position.

6.7.1.3 Checking Specific Gravity of Electrolyte

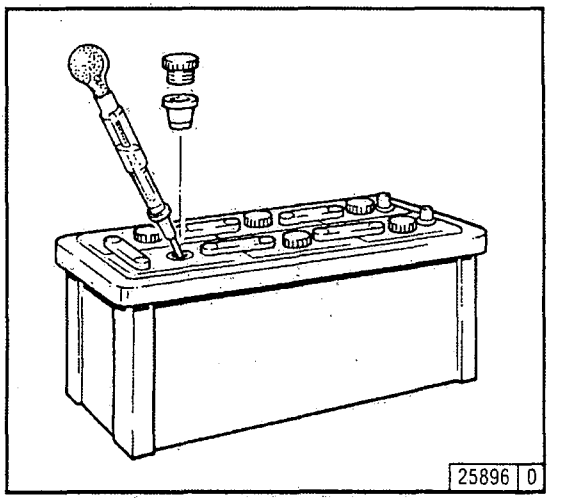

- Measure the specific gravity of the individual cells with a commercial hydrometer.
  The measured values (see adjacent table) indicate the state of charge of the battery. During the measurement, the temperature of the electrolyte should preferably read 20 °C.

6.7 Accessories

Service and Maintenance

6

Specific Gravity				
in [kg/l]		in [°Bé (degrees Baumé) *]		State of Charge
Normal	Tropics	Normal	Tropics	
1.28	1.23	32	27	Fully charged
1.20	1.12	24	16	Half charged, recharge
1.12	1.08	16	11	Discharged, charge up immediately

* Measurement of the specific gravity in °Bé (degrees Baumé) is obsolete and rarely used today.

The gases emitted by the battery are explosive! Avoid formation of sparks in the vicinity of battery, keep away any open flames!
Do not allow acid to come into contact with skin or clothing!
Wear protective goggles!
Do not place tools on battery!

Service and Maintenance

6.7 Accessories

6

6.7.2 Three-Phase Alternator

Notes on the three-phase system:

- When the engine is running, never disconnect the cables between battery, alternator and regulator.
- Where it is, however, necessary, to start and operate the engine without battery, disconnect the regulator from the alternator before starting.
- Be sure not to confuse the battery terminals.
- Renew a defective charging pilot light bulb immediately.
- Engine cleaning: Do not spray with water/ steam jet directly against alternator!

  Warm up engine to allow water residues to evaporate.
- Do no loosen connecting cable between battery and alternator during engine operation.
- The habit of touching a lead against frame to check whether it is live must under no circumstances be applied with a three-phase electric system.
- In case of electric welding, connect the earth terminal of the welding unit direct to the part to be welded.

6.7.3 Lifting Tackle

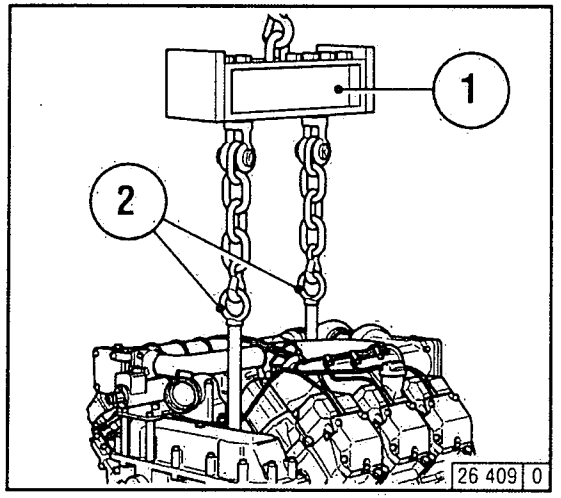

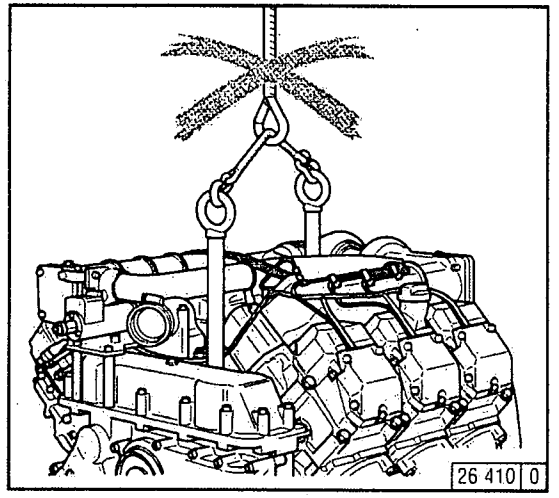

- For transporting the engine, always use the proper lifting tackle.
- Remove lifting tackle.
  - Do not start engine with lifting tackle fitted.

Always use the proper lifting tackle!

Troubleshooting

7

7.1 Diagnosis Chart

Troubleshooting

7.1 Diagnosis Chart

7

- If engine problems occur, they frequently have their cause in improper operation or maintenance of the engine.
- So, in case of trouble, always check first whether the operating and maintenance instructions have been observed.
- A helpful Diagnosis Chart is to be found on the opposite page.
- If you cannot identify the cause of the trouble or are unable to rectify it yourself, contact your service representative.

Before starting, make sure that nobody is standing in the immediate vicinity of the engine or driven machine.
After repairs :

Important: Never start engine with the speed governor removed.
Disconnect battery terminals!

7.1 Diagnosis Chart

Troubleshooting

7

Troubles	Causes	Remedial Measure	
Engine fails (or difficult) to start		Check	P
Engine starts, but runs unevenly or stalls		Adjust	E
Engine becomes too hot, temperature monitor gives warning (coolant)		Renew	W
Engine gives poor performance		Clean	R
Engine not working on all cylinders		Top up	A
Engine has little or no oil pressure		Lower level	S
Engine oil consumption excessive		Bleed	L
Engine smokes – blue			
– white			
– black			
		Section	
●	Not declutched (declutch where possible)	Operation	P
●	Below start limit temperature		P
●	Engine shutdown lever still in stop position (shutdown solenoid defective)		P
● ●	Oil level too high		P
●	Oil level too low		S
● ● ●	Excessive inclination of engine		P / E
●	Speed control lever set to middle position		P / E
● ● ● ●	Dirty air cleaner / defective turbocharger	Combustion Air	P / W
● ● ●	Air cleaner service switch/indicator defective		P
● ●	LDA* defective (leaking line)		P
● ● ●	Charge air pipe leaking		P / W
●	Coolant pump defective	Cooling System	P / R
● ●	Charge air cooler dirty		P / R
●	Coolant heat exchanger dirty		P / R
●	Coolant thermostat does not open		P
●	Battery defective or discharged	Electrics	P

* LDA = manifold pressure compensator

Table 1 of 2

Troubleshooting

7.1 Diagnosis Chart

7

Troubles										Causes	Remedial Measure	
Engine fails (or difficult) to start											Check	P
	Engine starts, but runs unevenly or stalls										Adjust	E
		Engine becomes too hot, temperature monitor gives warning									Renew	W
			Engine gives poor performance								Clean	R
				Engine not working on all cylinders							Top up	A
					Engine has little or no oil pressure						Lower Level	S
						Engine oil consumption excessive					Bleed	L
							Engine smokes – blue					
								– white				
									– black			
										Causes	Section	
●										Cable connection to starter loose or oxidized	Electrics	P
●										Starter defective or pinion does not engage		P
●	●		●	●				●	●	Incorrect valve clearance	Engine	E
●	●		●	●						Leaking injection line		P
		●								Vent pipe clogged (coolant heat exchanger)		P / R
●								●		Flame-type heater plug system defective		P
●	●	●	●	●				●	●	Injector defective		P / W
●	●		●	●						Air in fuel system (lack of fuel)		P / L
●	●		●	●						Fuel filter / prefilter contaminate		P/R/W
●						●				Incorrect lube oil SAE class or quality grade	Operating Media	W
●	●		●					●		Fuel quality grade not corresponding to specification under 4.2.1		P / W
		●								Lack of coolant		P / A

Engine Preservation

8

8.1 Preservation

Engine Preservation

8

8.1 Preservation

If the engine is to be shut down for an extended period, it is necessary to take preservation measures to prevent rust formation. The preservation measures described here will protect the engine for a period of up to about 6 months. Before reusing the engine, the preservatives must be removed,.

- Anti-corrosion oils to Specification:
  - MIL-L 21260B
  - TL 9150-037/2
  - Nato Code C 640 / 642
- Recommended cleansing agent for removing preservatives:
  - Petroleum benzine (hazardous materials class A3)

Preserving the Engine:

- Clean engine (in case of need with cold cleansing agent).

  Clean cooling system according to manufacturer's instructions.
- Run engine until warm and stop.
- Drain engine oil, see 6.1.2, and fill in anti-corrosion oil.
- Drain coolant, see 6.3.3.
- Fill in anti-corrosion agent, see 4.3.3.
- Clean oil bath air cleaner, if provided, see 6.4.3, and fill in anti-corrosion oil.
- Drain fuel from tank.
- Prepare a mixture of 90% diesel fuel and 10% anti-corrosion oil and fill up tank.

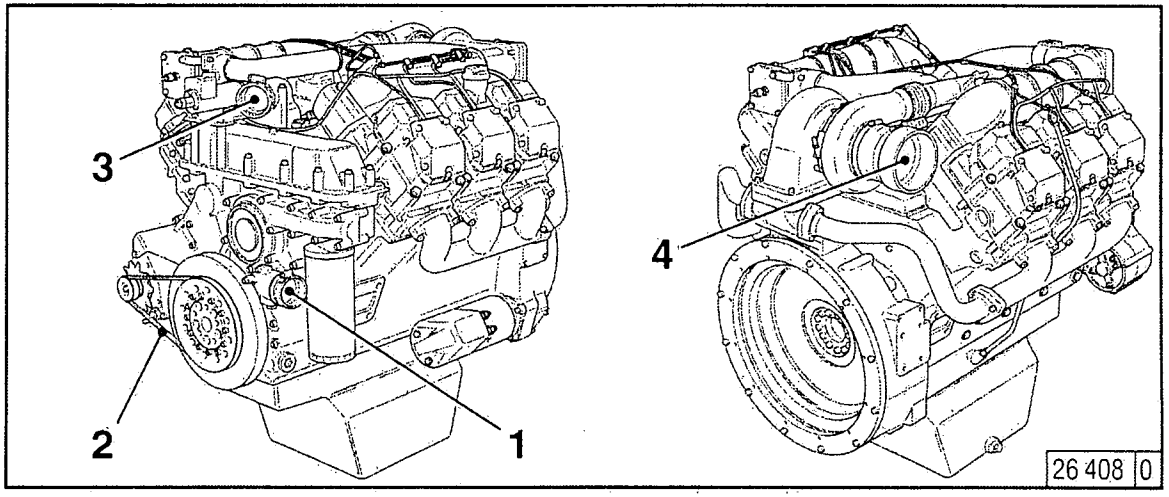

- Run engine for about 10 minutes.
- Stop engine.
- Turn engine several times by hand.
  When turning engine with starter, move shutdown lever to stop position.
- Remove V-belt 2 and store in wrapped condition.
- Spray grooves of V-belt pulleys with anti-corrosion agent.
- Close coolant inlet and outlet openings 3 and air intake opening 4.
- Close exhaust discharge opening.
- Drain off anti-corrosion agent, see 6.3.3.

Removing Engine Preservatives:

- Remove anti-corrosion agent from the grooves of the V-belt pulleys.
- Fit V-belt 2. Retension, if necessary, after short period of operation, see 6.5.
- Remove plugs 1, 3 and 4 and plug from exhaust discharge opening.
- Fill in coolant according to instructions of radiator manufacturer.
- Start up engine.

Specification Data

9

9.1 Engine Specifications and Settings
9.2 Torque Wrench Settings
9.3 Tools

Specification Data

9.1 Engine Specifications and Settings

9

Model 1015		BF6M 1015	BF8M 1015	BF6M 1015 C/CP	BF8M 1015 C/CP
Number of cylinders		6	8	6	8
Cylinder arrangement		90° Vee-angle			
Bore	[mm]	132			
Stroke	[mm]	145			
Total displacement	[cm³]	11906	15874	11906	15874
Compression ratio	[ε]	17			
Working cycle / combustion system		4-stroke TC engine/direct injection			
Direction of rotation		counter-clockwise			
Weight incl. cooling system	[approx. kg]	Consult headquarters			
Weight w/o cooling system acc. to DIN 70020-A	[approx. kg]	830	1060	830	1060
Engine power	[kW]	190-240 [1)]	250-320 [1)]	228-300 [1)]	304-400 [1)]
Speed	[rpm]	[1)]			
Valve clearance, engine cold [5)]	[mm]	inlet 0.25 $^{+0,1}$ / exhaust 0.3 $^{+0,1}$			
Injector opening pressure	[bar]	290 bar			
Commencement of delivery	[°CA BTDC]	[1)]			
Firing order		1-6-3-5-2-4 A1-B3-A3-B2-A2-B1	1-8-4-5-7-3-6-2 A1-B4-A4-B1-B3-A3-B2-A2	1-6-3-5-2-4 A1-B3-A3-B2-A2-B1	1-8-4-5-7-3-6-2 A1-B4-A4-B1-B3-A3-B2-A2
V-belt tension:		tension / retension [2)]			
Alternator 55 amperes	[N]	450 / 200-350 $^{\pm 50}$			
Alternator 120 amperes	[N]	550 / 300-450 $^{\pm 50}$			

[1)] Engine power, speed, commencement of delivery, etc. are stamped on the rating plate, see 2.1.

[2)] Retension after running for 15 minutes under load.

9.1 Engine Specifications and Settings

Specification Data

9

Model 1015		BF6M 1015	BF8M 1015	BF6M 1015 C/CP	BF8M 1015 C/CP
Cooling system		liquid-cooled / cooling system protection			
Coolant quantity	[approx. lit.]	17 + MFK*	21 + MFK*	17 + MFK*	21 + MFK*
Perm. cont. coolant temperature engine outlet	[°C]	max.103			
Temperature difference between coolant inlet / outlet	[°C]	max.5			
Thermostat starts opening at	[°C]	87 ±2			
Thermostat fully open from	[°C]	102			
Coolant pump					
Delivery pressure in	[bar]	4)			
Delivery rate in	[m³/h]	22,5 4)	30 4)	22,5 4)	30 4)
Lubrication		forced-feed lubrication			
SAE oil (see 4.1)		15 W 40			
Min. oil pressure with engine warm (120 °C) at low idle / rated speed	[bar]	1,0			
Oil capacity (initial filling) without filter	[approx. lit.]	34 3)	45 3)	34 3)	45 3)
Oil capacity (initial filling) engine-mounted filter	[approx. lit.]	36* 3)	47* 3)	36* 3)	47* 3)
Oil capacity (initial filling), separate filter	[approx. lit.]	38 3)	50 3)	38 3)	50 3)

3) Approximate figures can vary depending on the design. **Decisive is always the upper dipstick mark.**

4) 3 bar at engine speed n = 2100 rpm $^{-1}$

5) see 6.1.1 (Only synthetic lube oil, see 4.1.2.1)

* MFK Engine radiator

Specification Data

9.2 Torque Wrench Settings

9

Location	Preloading [Nm]			Tightening [° deg.]				Total [Nm]	Notes
	1st Stage	2nd Stage	3rd Stage	1st Stage	2nd Stage	3rd Stage	4th Stage		
Rocker cover								22	
Inspection Cover								22	
Rocker arm setscrew								20	
Mount — rigid mounting	30			45					
Mount — flexible mounting								106	
Air intake manifold								21	
Exhaust manifold								61	
Oil drain plug								100	
Injector mounting								60	
Injection line mounting								25	
Oil pan								24	
Oil filter cartridge								27	engine mounted or separate
Coolant drain plug								38	
Pin-type heater plugs / pipe union								4	

9.3 Tools

Specification Data

9

V-belt Tension Gauge

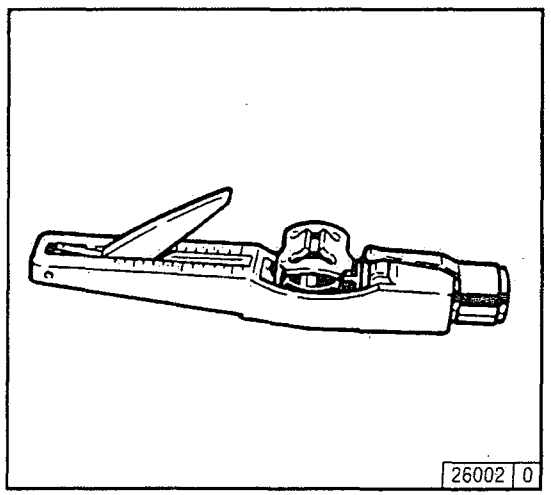

The V-belt tension gauge can be obtained under order number **8115** from:

Fa. WILBÄR
Postfach 14 05 80
D-42826 Remscheid

Notes

CALIFORNIA PROPOSITION 65 INFORMATION

TO CALIFORNIA CUSTOMERS AND TO CUSTOMERS SELLING DIESEL ENGINE EQUIPMENT INTO OR FOR USE IN CALIFORNIA.

Proposition 65, a California law, requires warnings on products which expose individuals in California to chemicals listed under that law, including certain chemicals in diesel engine exhaust.

Obligations of Manufactures of Diesel-Powered Off-Road Equipment. The California Superior Court has approved either of the following two methods of compliance with Proposition 65 requirements by manufactures of off-road equipment containing diesel engines. (The court order containing these provisions is attached.)

1. **On-Equipment Warning.** Place the warning pictured in attachment 1 on all equipment shipped by you into or for sale in California after January 1, 1996. The warning must be in a location where it is easily visible to the operator of the equipment when (s)he is operating the equipment. The warning must be secured to the equipment. If warnings or operating instructions are provided through a digital display, you may usee that method of providing warning.
2. **Operator Manual Warning.** When the operator manual is next revised or by December 31, 1995 whichever is earlier, place the warning in attachment 2 in the operator manual. The warning may be either printed in the manual or on a sticker.

The warning must appear in one of the following locations:

- Inside The front cover
- Inside the back cover
- Outside the front cover
- Outside the back cover
- As the first page of text

Under either alternative, the warning must appear in the same size, print and format as the attachment selected or be of an equally conspicuous size and format. If the warning is provided in an on-screen display, the warning must contain the language in the attachment and must be provided at the time of or in connection with ignition in the same manner as other safety warnings electronically communicated on screen.

Obligation of Resellers of Diesel Engines. This letter must accompany any loose diesel engine sold in California.
Should you have any questions, please call Deutz Corporation Product Support Department.

2.2 Engine Illustration

2.2.2 Cyl. Bank B – BF6M1015

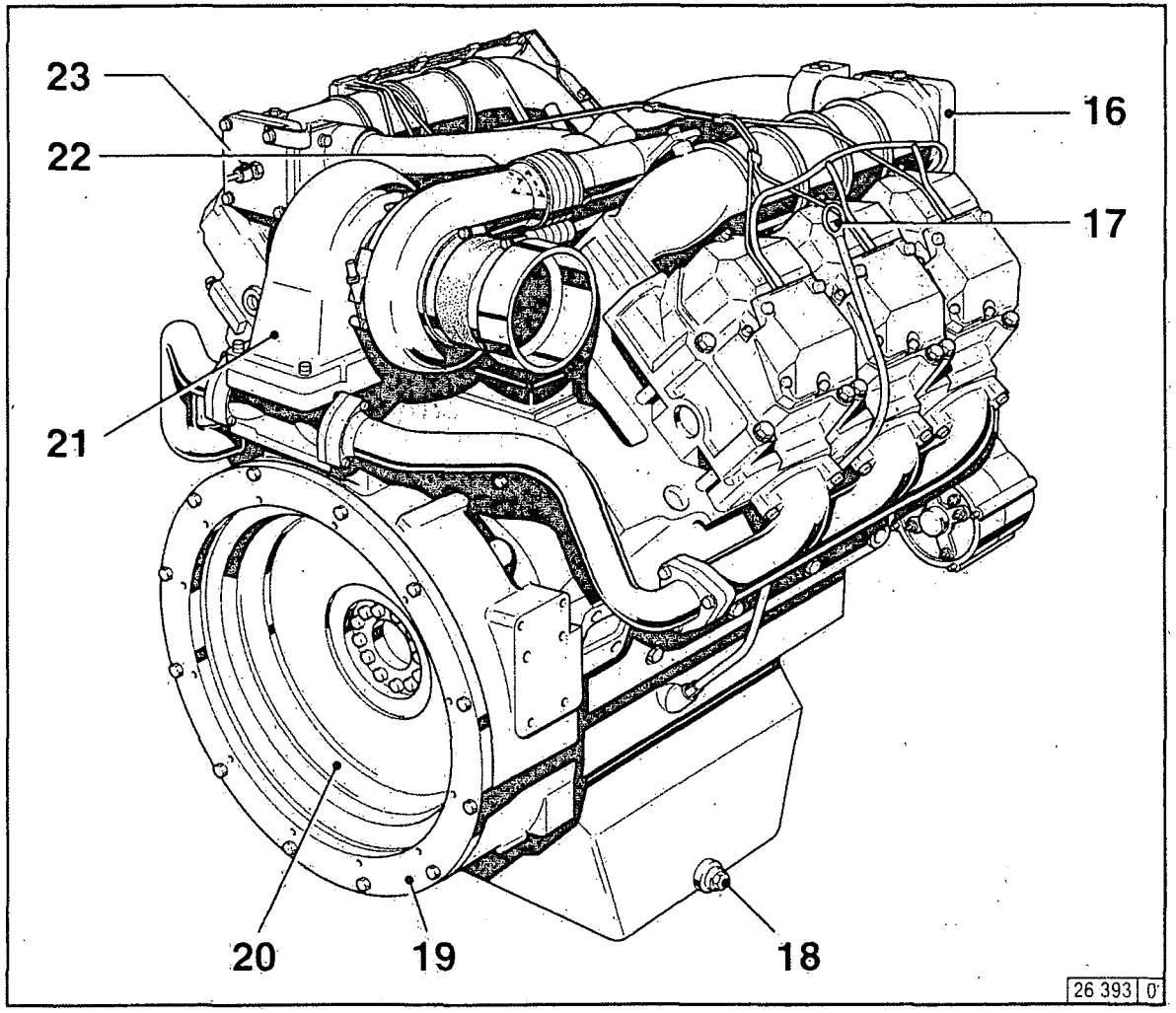

16 Charge air pipe
17 Oil dipstick
18 Oil drain plug
19 SAE housing
20 Flywheel
21 Exhaust turbocharger
22 Injection pump
23 Flame-type heater plug (A-side)

Dealer's stamp

Engine Serial No:

Please enter here the serial No. of your engine. This will facilitate dealing with your questions concerning after-sales service, repair and spare parts.

This Spare Parts Catalogue is subject to engineering changes necessary for engine advancement. All rights reserved. No part of this publication may be reproduced or multiplied in any form, without our prior permission in writing.

Spare Parts Catalogue

BF M 1015/C

0297 7772

DEUTZ

Preface

Dear Customer,

watercooled DEUTZ diesel engines are developed to meet the requirements of a wide range of applications. An extensive program of variant options gives them their high flexibility.

Your engine is custom-made, i.e. specifically equipped for your requirement, which means that not all of the components and assemblies contained in this Catalogue are fitted to your engine.

The greater part of the illustrations does not depict all details, and yet you will find it easy to differentiate between versions and thus to identify the parts pertaining to your engine model. **Fig. Item No., Assembly Group No. Engine Serial No.** are the codes that infallibly lead to selection of the correct parts.

When placing your order, please observe our ordering hints. This will allow speedy and reliable delivery of the required parts that are based on latest engineering standards.

If there are any questions, please do not hesitate to contact us.

Sincerely,
DEUTZ AG

Preface

DEUTZ Diesel Engines

are products based on long-standing research and development. The deep funds of acquired know-how in conjunction with high quality requirements guarantee that engines leaving our works achieve a long life, high reliability and excellent fuel economy. Naturally, they also attain best ratings as regards environmental protection.

Genuine DEUTZ Parts

are subject to equally stringent quality requirements as the engines themselves. Improvements in engine design certainly also pass into the genuine DEUTZ parts. To ensure that your engine will retain its functions and high reliability, you should use genuine DEUTZ parts only.

DEUTZ Exchange Components

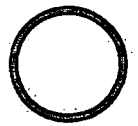

are a cheap alternative. Of course, they are subject to the same high quality requirements as new parts. And as regards functions and reliability, DEUTZ exchange components equal genuine DEUTZ parts.

SERVICE

In case of operational trouble with your equipment or queries about spare parts please turn to your nearest service dealership. Our skilled staff of service experts will trace and remedy any defect quickly, using genuine DEUTZ parts.

Beware of the Running Engine

Be sure to shut down the engine before performing maintenance or repair work. After repair, put back in place any removed panels and guards. When doing work on the running engine, working clothes should fit tightly so that loose ends cannot get caught. Do not run the engine in enclosed rooms – poison hazard.

Asbestos

Gaskets used for this engine do not contain asbestos. Please use suitable spare parts when carrying out maintenance and repair work.

Description of Engine

1. Maker's Nameplate

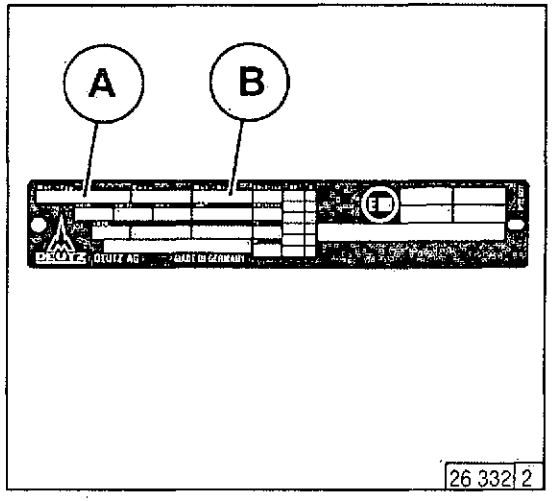

Engine model designation **A**, Engine Ser. No. **B** and the power rating are given on the maker's nameplate. Be sure to state engine model and engine serial number when writing out a parts order.

2. Position of Nameplate

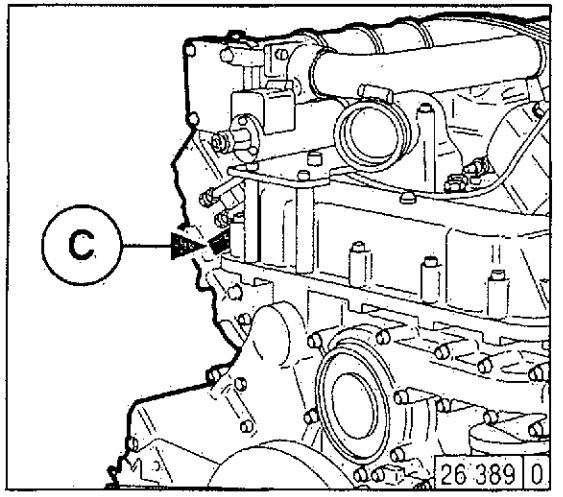

The nameplate **C** is attached to the crankcase.

3. Engine Serial No.

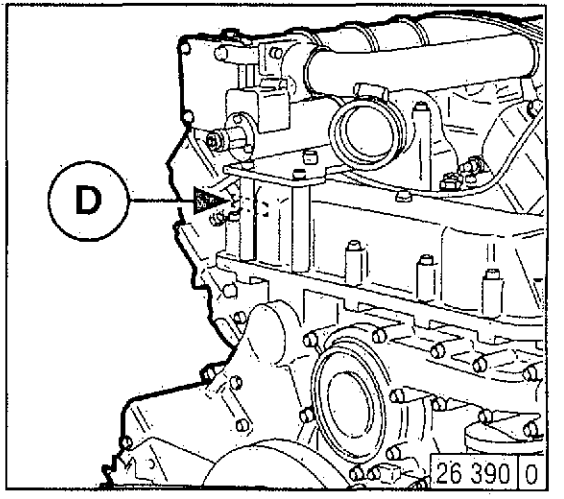

The engine serial No. **D** is stamped on the crankcase and also on the nameplate.

Ordering spare parts

Order information

Please specify the following information when ordering original DEUTZ parts:

- Engine no.
- Ident. no.
- Quantity

Document structure

- The picture diagrams in this spare parts list are sorted according to engine assembly groups.
- Each section is preceded by an overview of the assembly groups.
- The ident. no. **08/25** is made up of the assembly group (e.g. **08**) and item number (e.g. **25**).

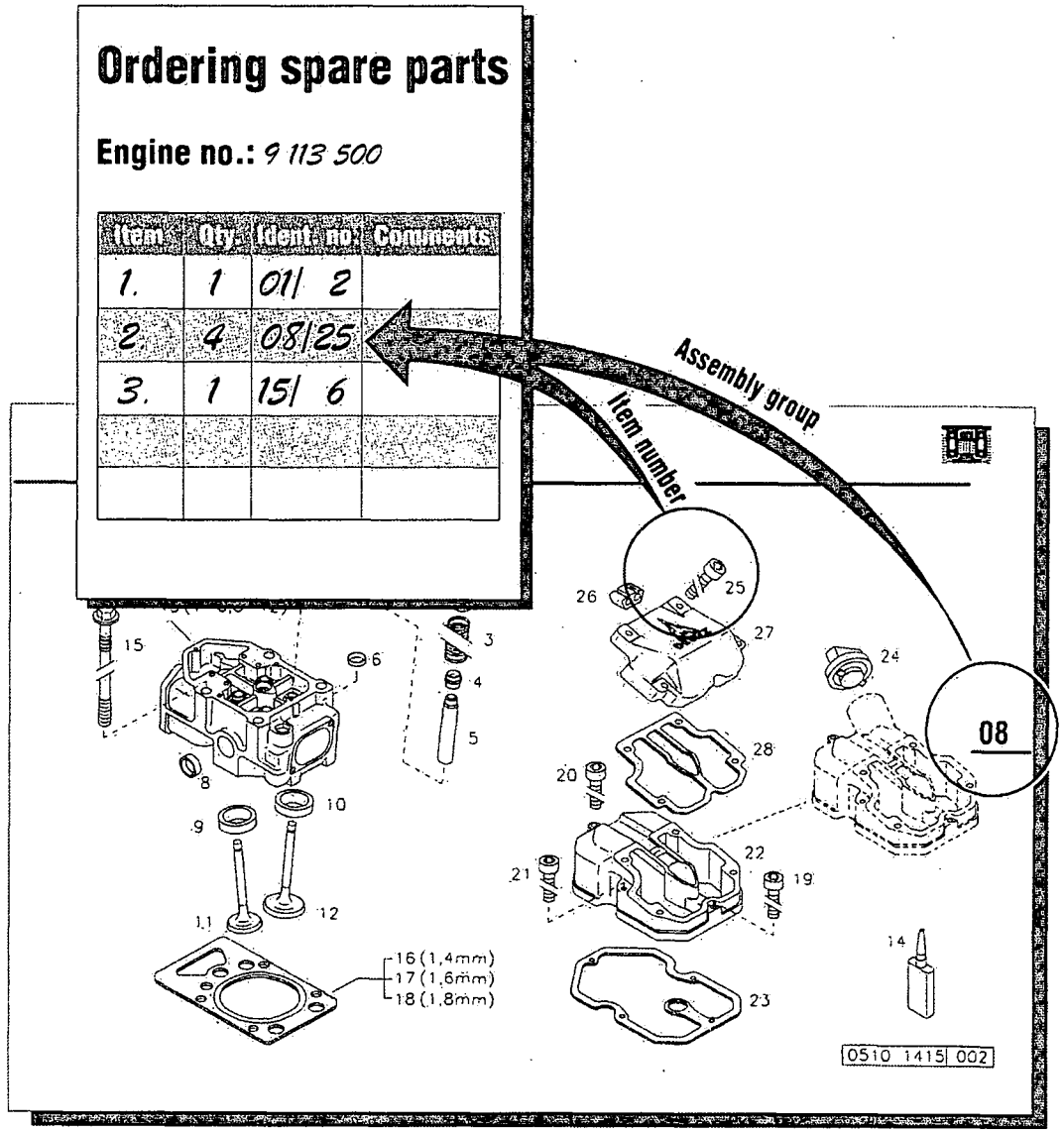

Service

Knowing it's DEUTZ

DEUTZ has always stood for excellence in motor construction, pioneering many developments in the industry. As an independent motor manufacturer, we offer — worldwide — a comprehensive range of diesel and gas motors spanning from 4kW to 7,400kW. Our products are perfectly tailored to meet our customers' individual requirements.

Over 1.4 million DEUTZ and DEUTZ MWM motors do their job reliably all over the world. We are determined to preserve the high standard of performance and dependability of our motors, thus keeping our customers satisfied at all times. Therefore we are represented worldwide through a network of highly competent service partners who will meet the needs of our customers, wherever they are.

This is why DEUTZ is not only the name for motors which pack a lot of inventive genius. DEUTZ also means reliable service and comprehensive support to enhance your motor's performance.

This index Sales & Service offers you an overview of the DEUTZ partners in your vicinity, including the products for which they are responsible and the range of services provided. But even when no direct product responsibility is mentioned, your DEUTZ partner will be happy to help you with expert advice.

The Index is constantly updated. Please ask your DEUTZ service partner for the latest edition.

DEUTZ AG — at your service.

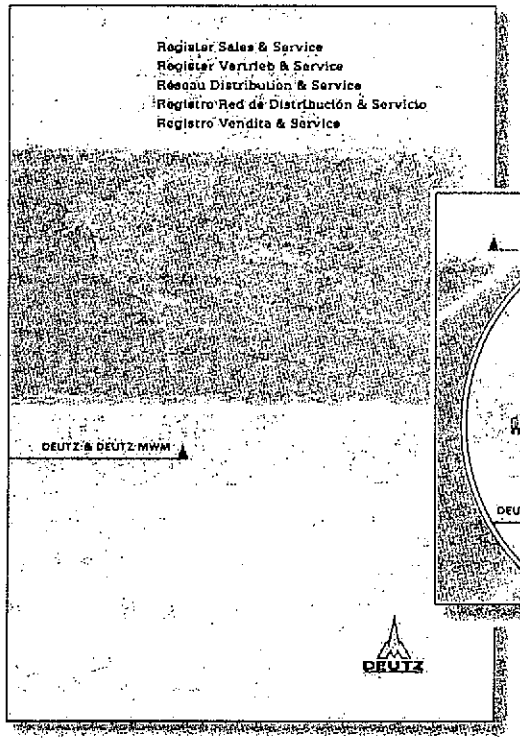

Order-No.: 0297 7444

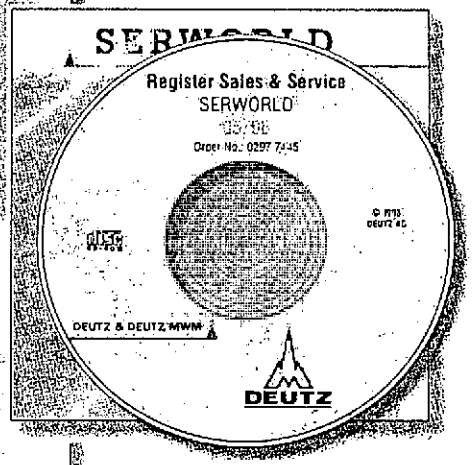

Order-No.: 0297 7445 (CD-ROM)

Obtainable from the local service Partner reponsible for you or from:

DEUTZ AG
Deutz-Mülheimer Str. 147-149
D-51057 Köln

Phone: 0049-221-822-0
Telefax: 0049-221-822-5304
Telex: 8812-0 khd d
http://www.deutz.de

Bildtafeln
Illustrations
Figures
Grabados
Quadros de figuras
Tavole
Afbeeldingen
Planscher
Illustrationer
Kuvat
Bilder
Διαγράμματα
Sekiller
Иллюстрации
الرسوم والأشكال التوضيحية

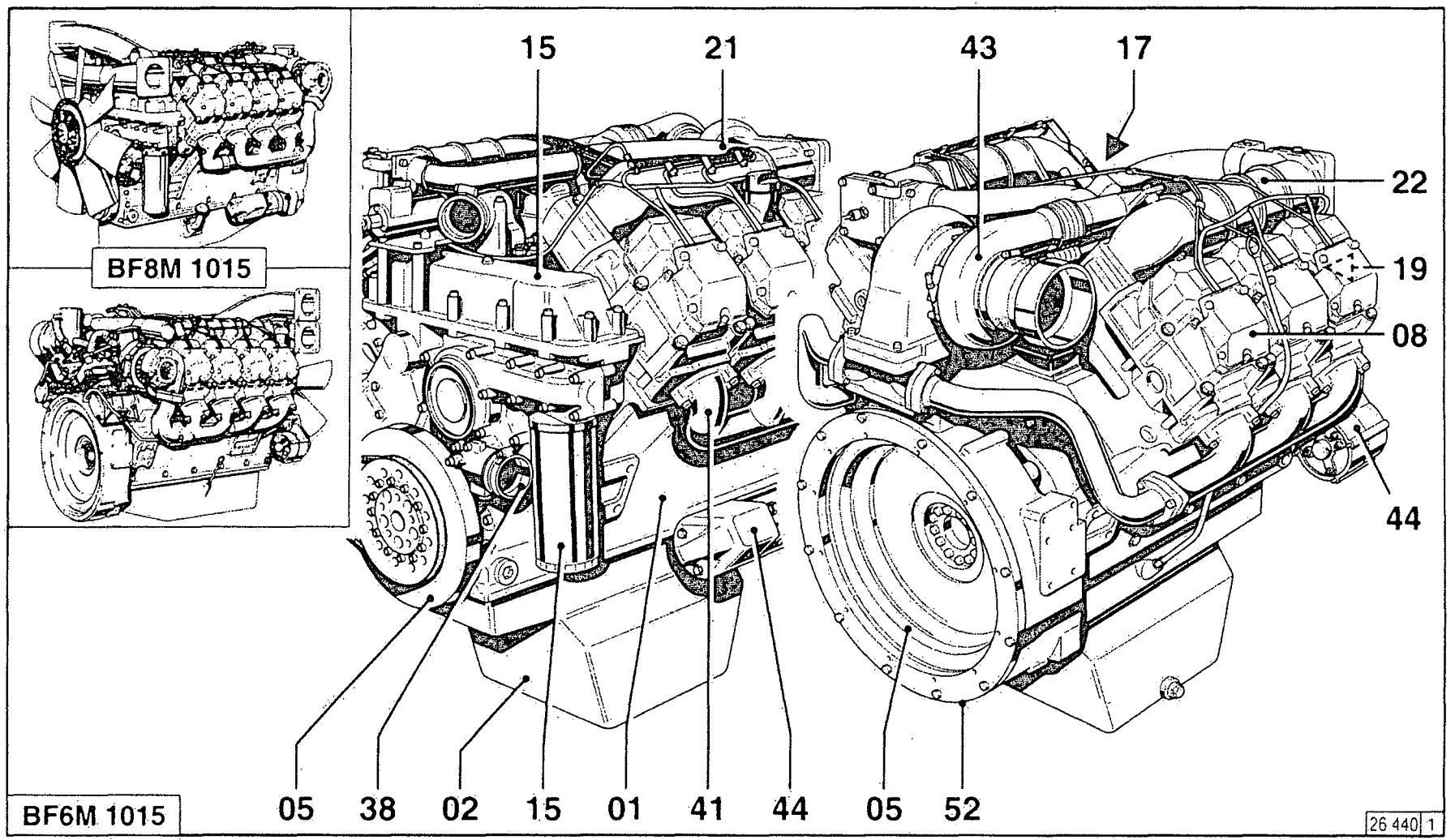
BF8M 1015
BF6M 1015
15
21
43
17
22
19
08
44
05
38
02
15
01
41
44
05
52
26 440 1

01
10

01

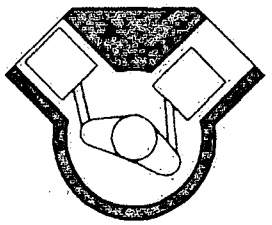

05

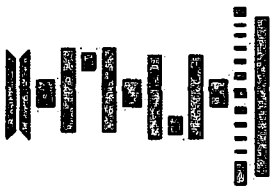

08

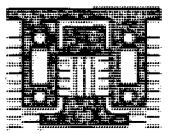

02

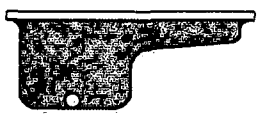

06

09

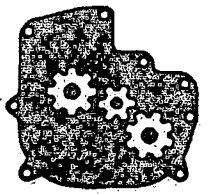

04

07

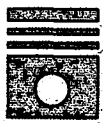

10

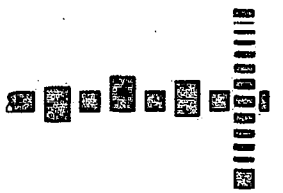

01

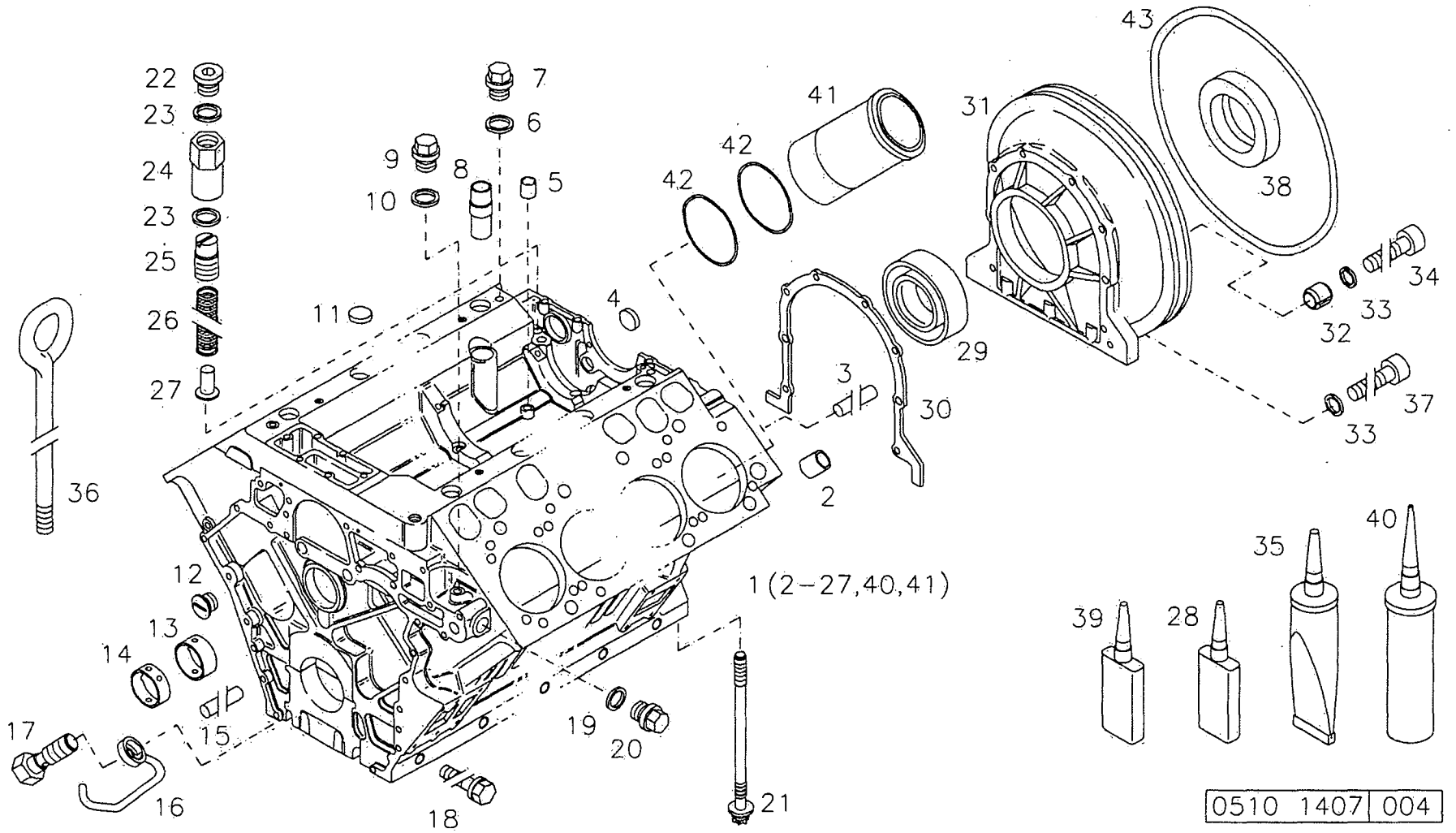
22
23
24
23
25
26
27
36
7
6
9
8
10
5
11
4
42
42
41
43
31
38
34
33
32
29
3
30
37
33
2
1(2-27,40,41)
12
13
14
15
17
16
18
19
20
21
39
28
35
40
0510 1407 004

01

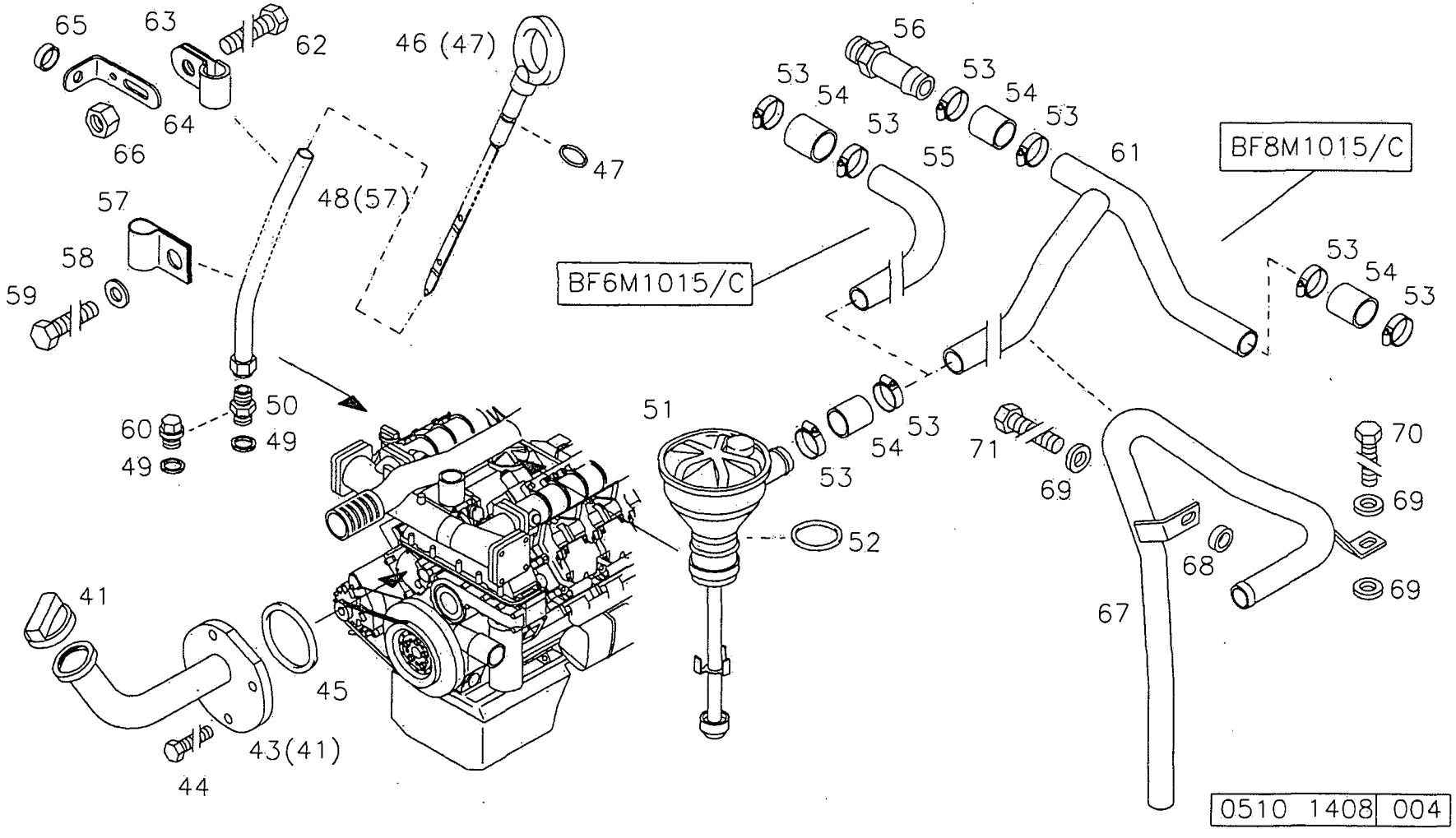
65
63
62
46 (47)
64
66
47
48(57)
57
58
59
BF6M1015/C
56
53
54
53
54
53
55
61
BF8M1015/C
53
54
53
50
60
49
49
51
53
54
53
52
71
69
70
69
68
69
67
41
45
43(41)
44
0510 1408 004

0510	1409	003

01

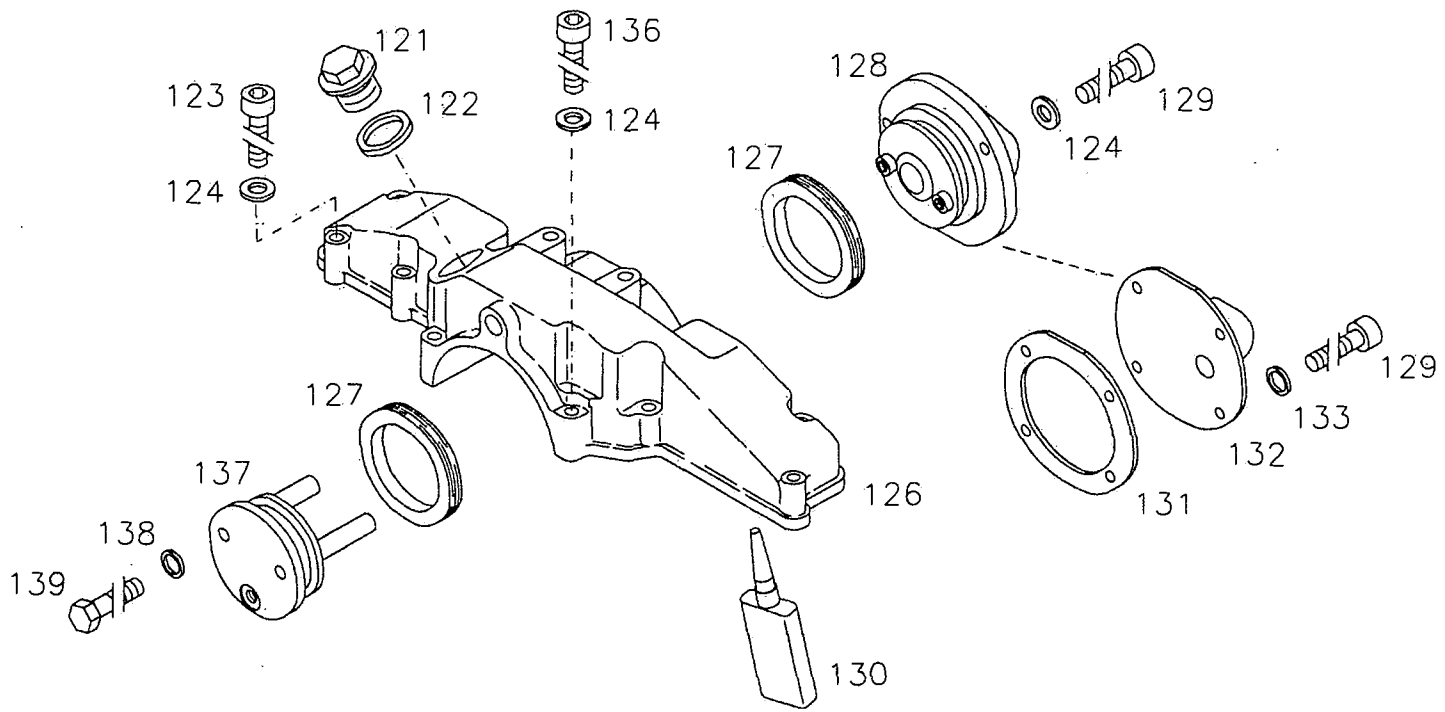

0510	1456	003

02

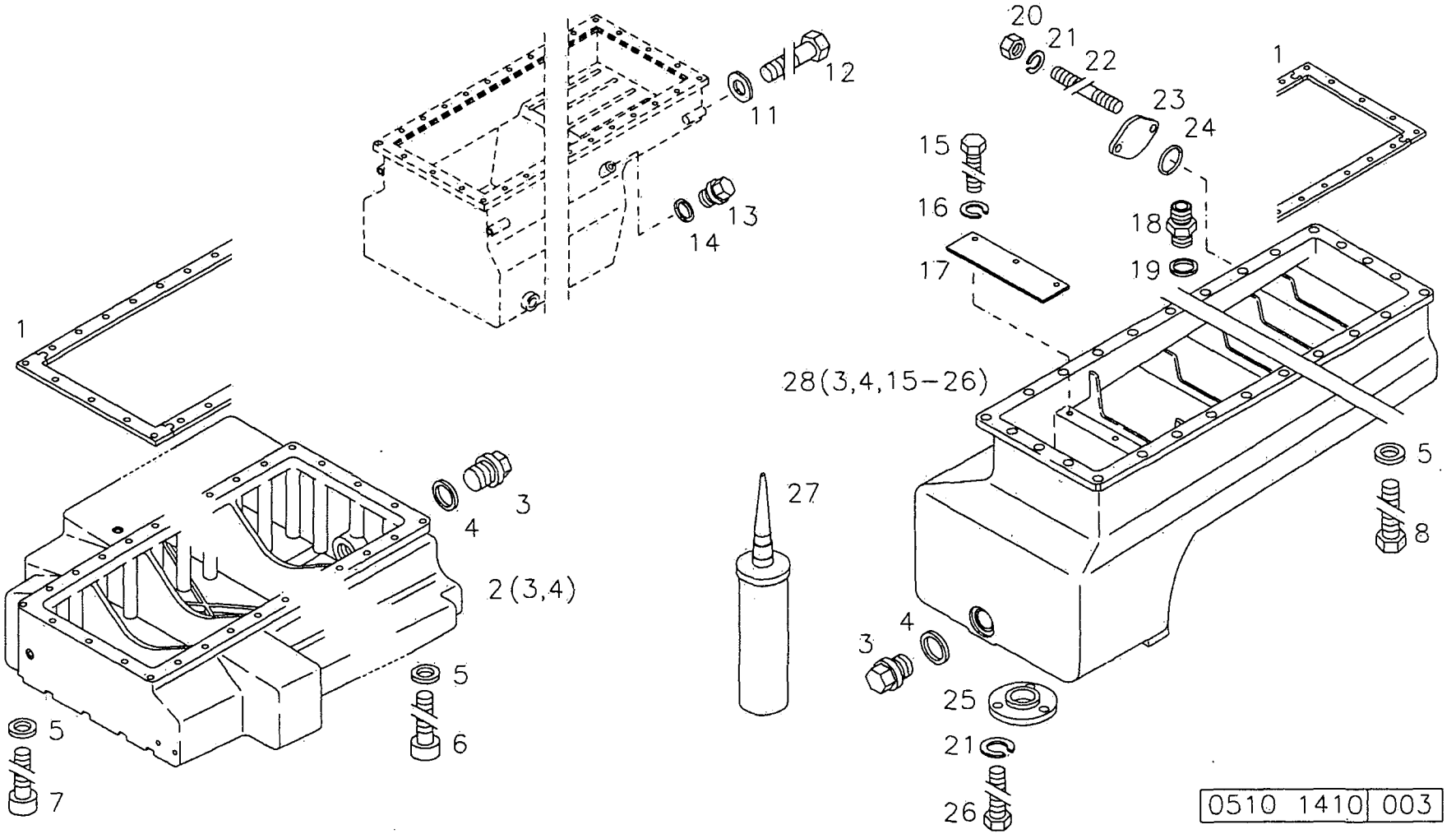
1
2(3,4)
3
4
5
6
7
11
12
13
14
15
16
17
18
19
20
21
22
23
24
25
26
27
28(3,4,15–26)
8
0510 1410 003

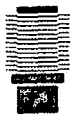

04

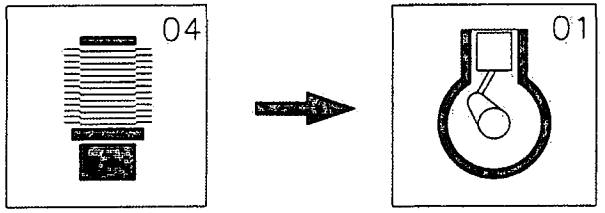

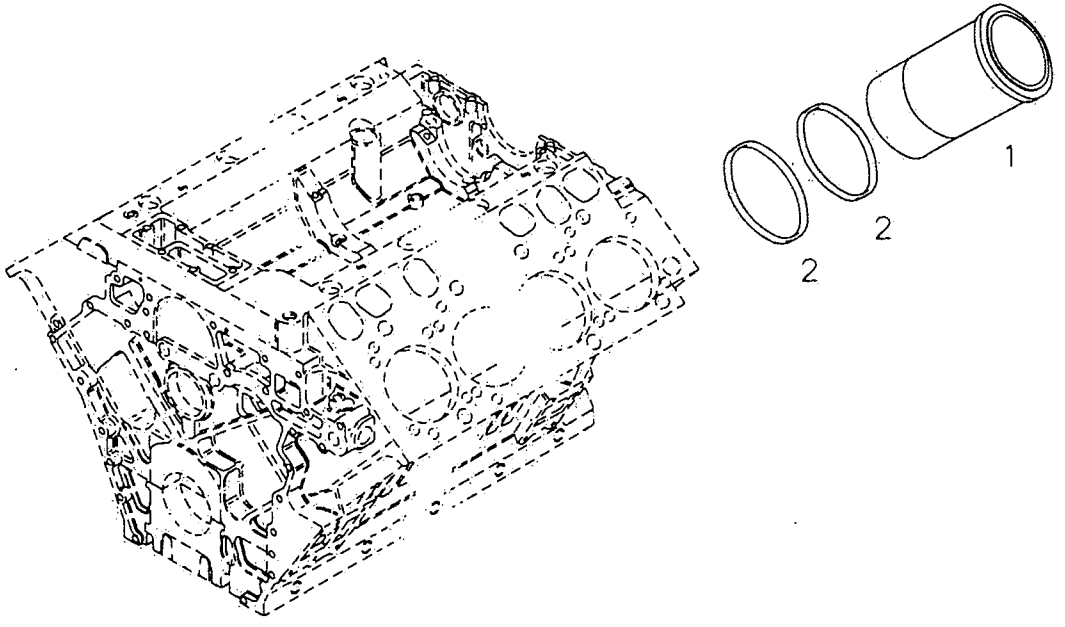

0510 1509 | 002

05

05

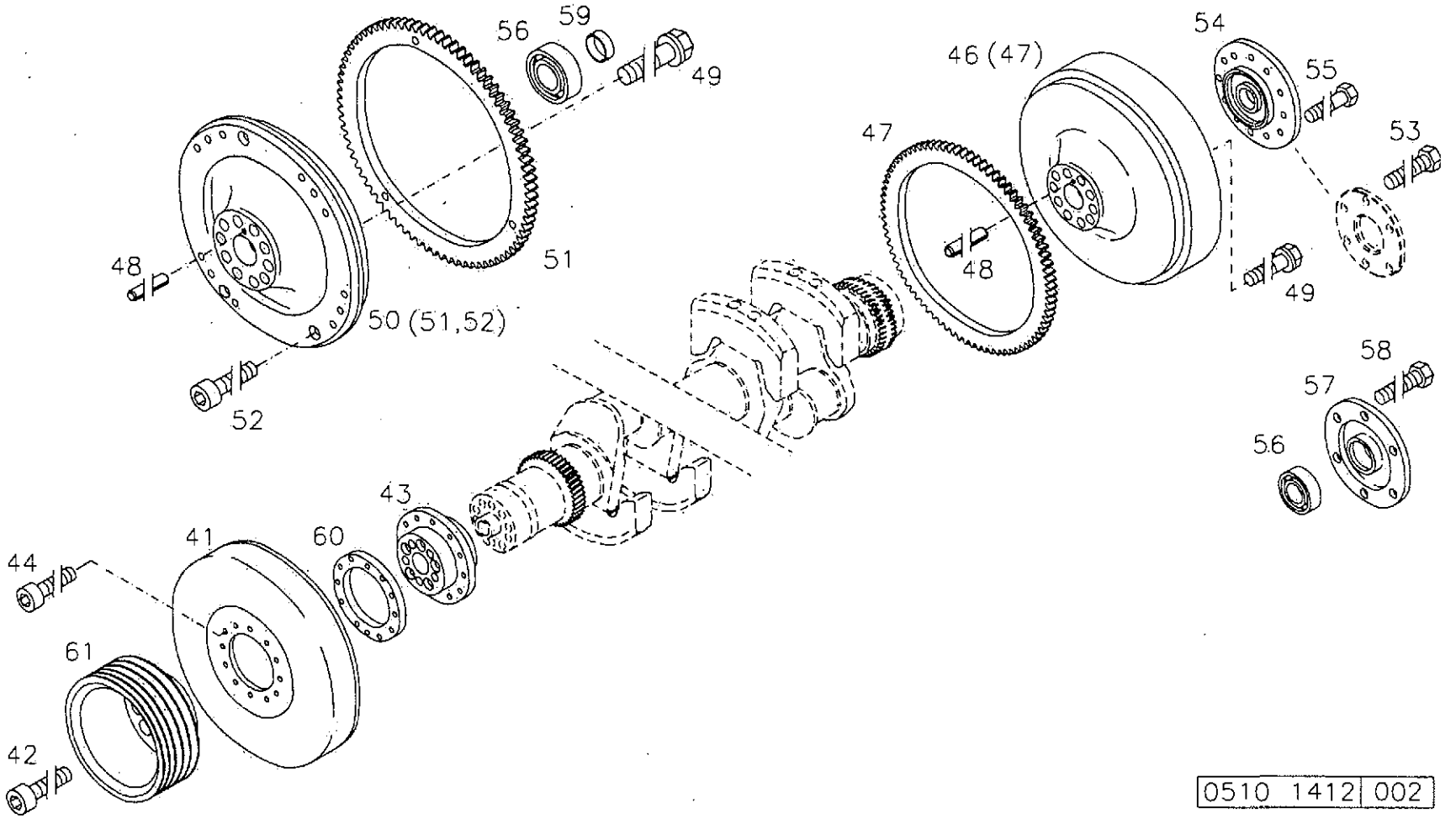
56
59
49
46 (47)
54
55
53
47
48
51
48
50 (51,52)
49
52
58
57
56
43
41
60
44
61
42
0510 1412 002

06

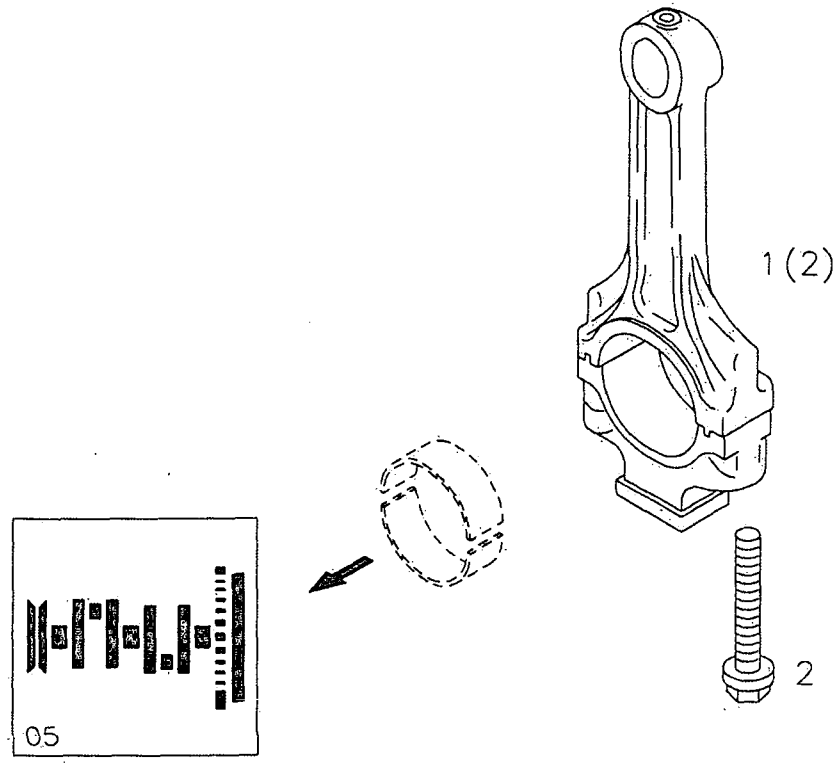

0510 1413 002

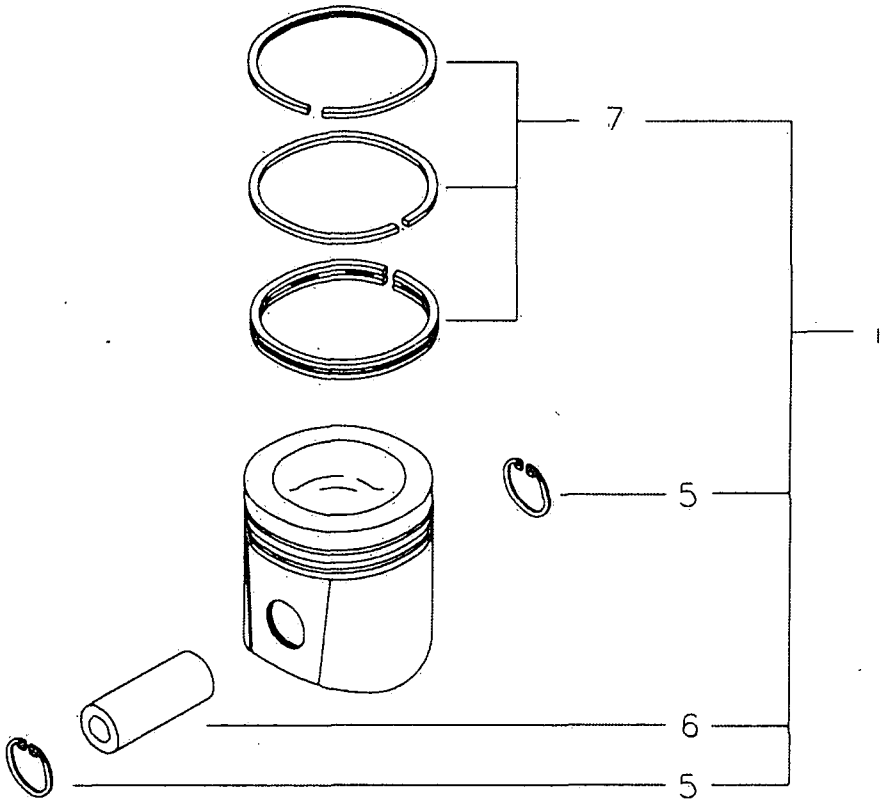

0510 1414 000

08

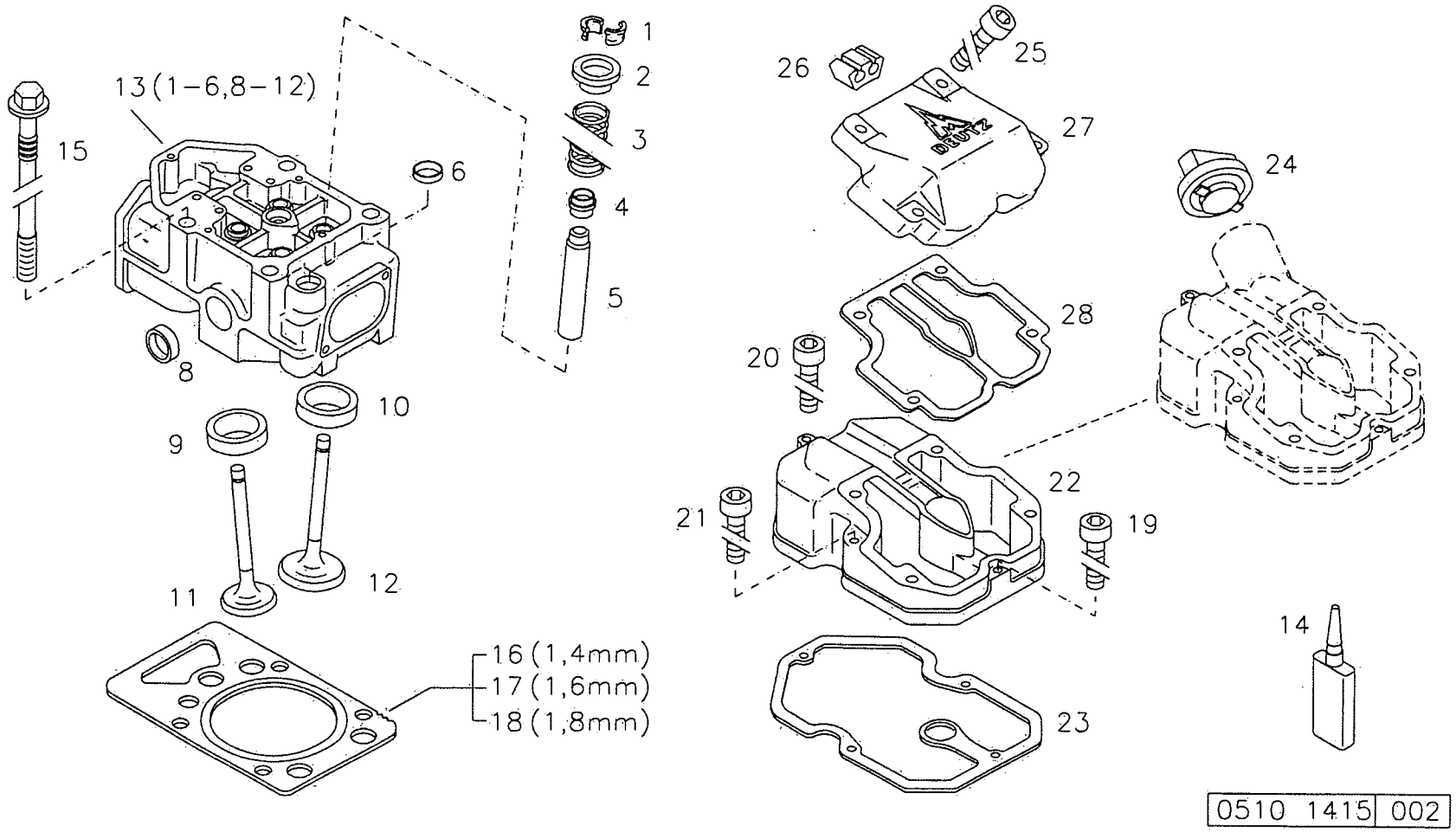
1
2
3
4
5
6
8
9
10
11
12
13(1-6,8-12)
15
16(1,4mm)
17(1,6mm)
18(1,8mm)
19
20
21
22
23
24
25
26
27
28
14
0510 1415 002

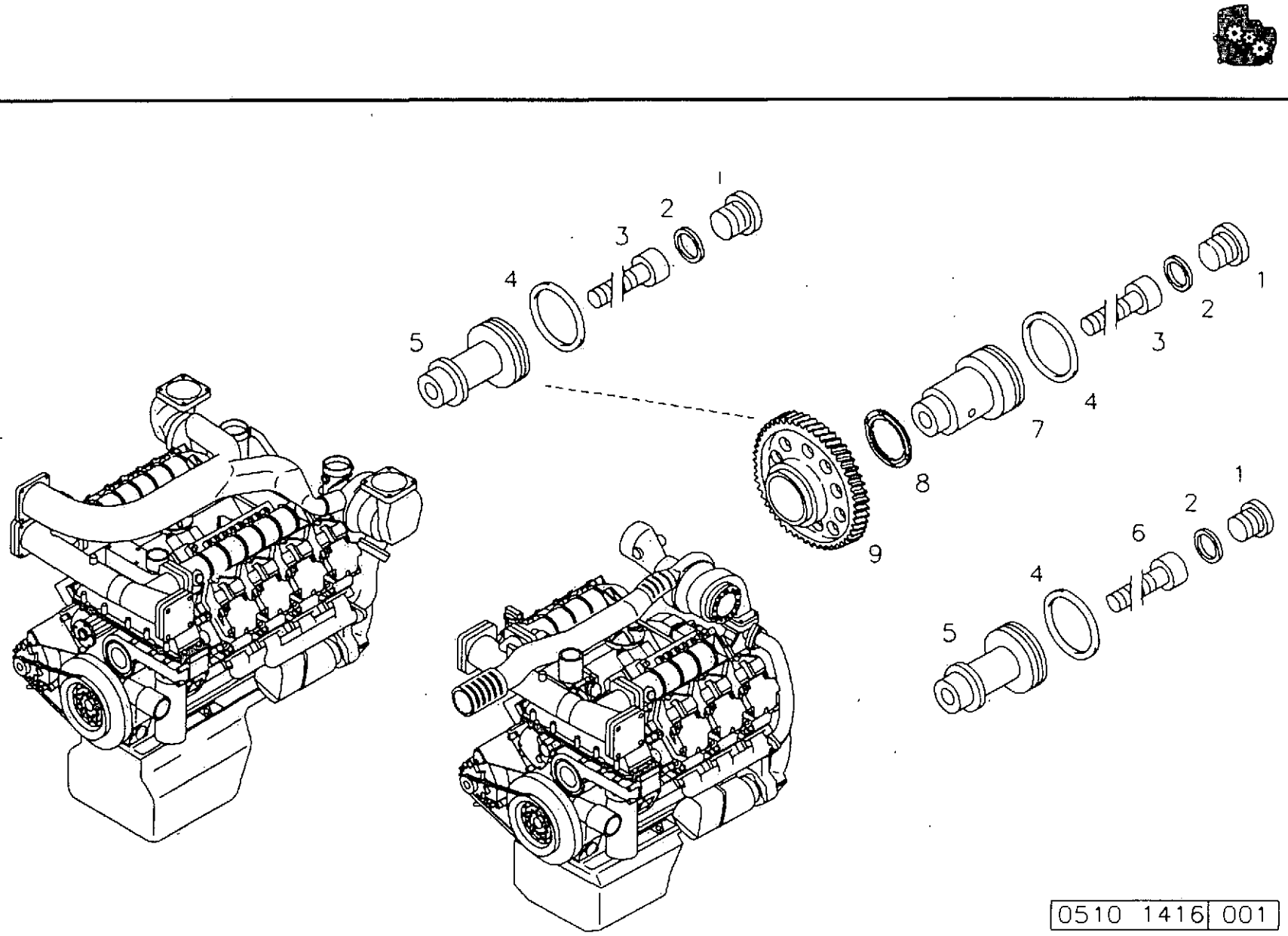
09
1
2
3
4
5
7
8
9
6
0510 1416 001

10

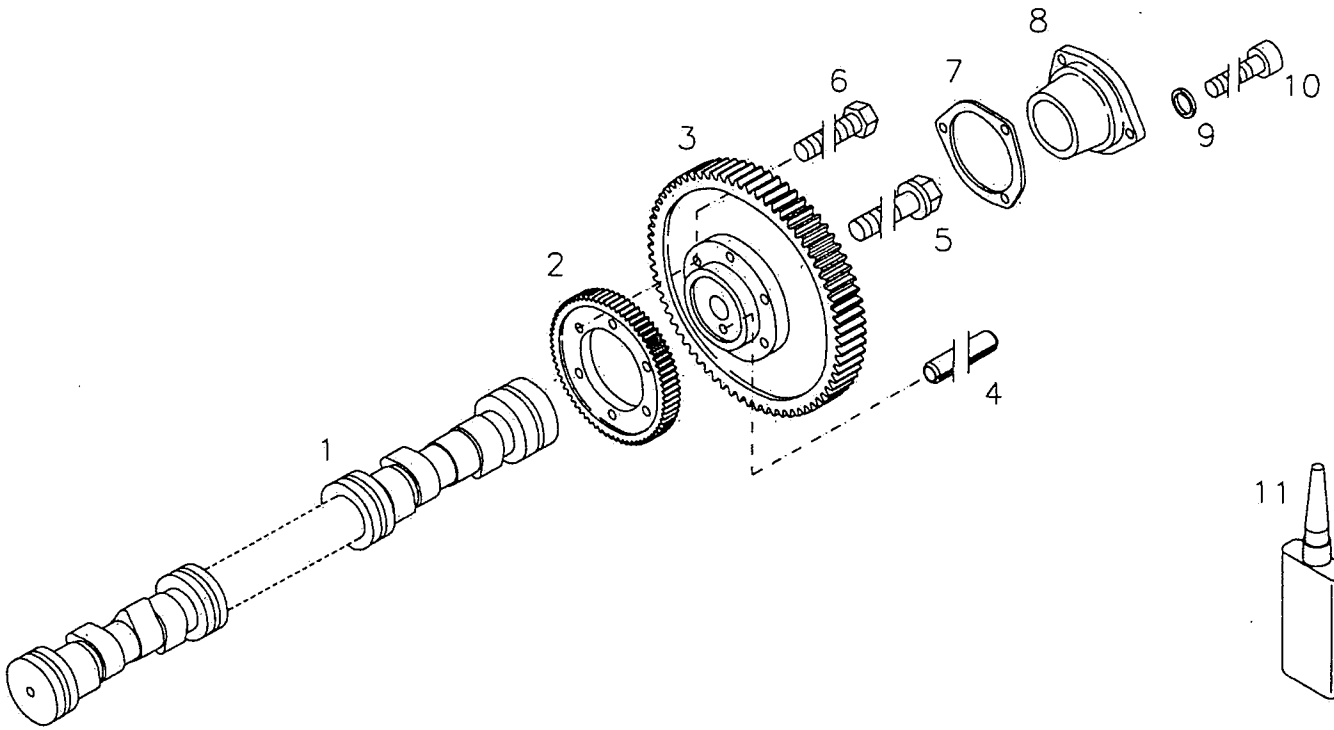

0510 1417 001

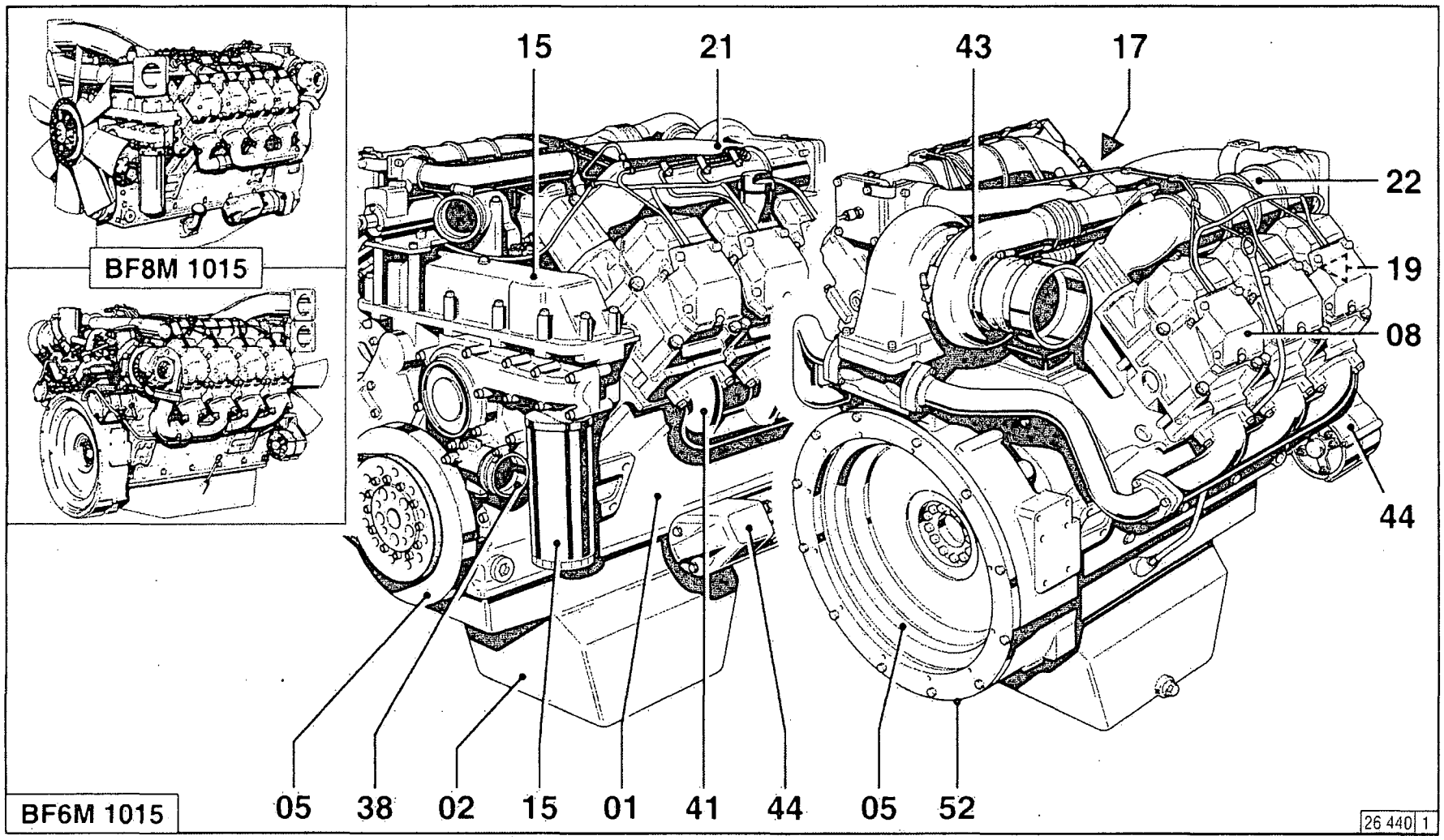
BF8M 1015
BF6M 1015
15
21
43
17
22
19
08
44
05
38
02
15
01
41
44
05
52
26 440 1

20
17
15
19
16
14
18
15
11
11
20

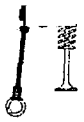

11

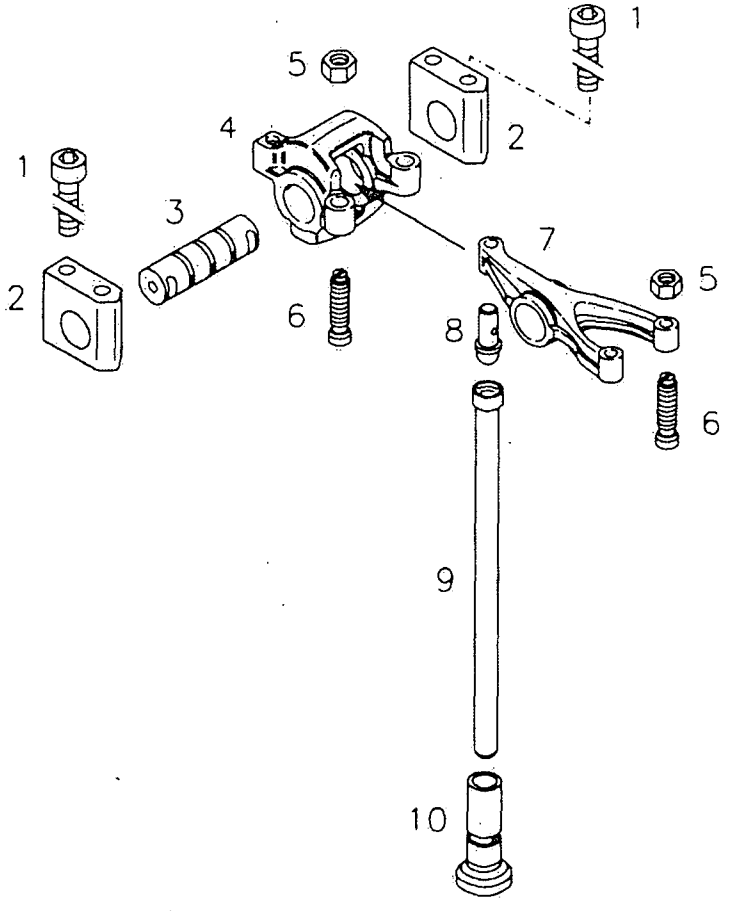

0510 1418 000

14

15

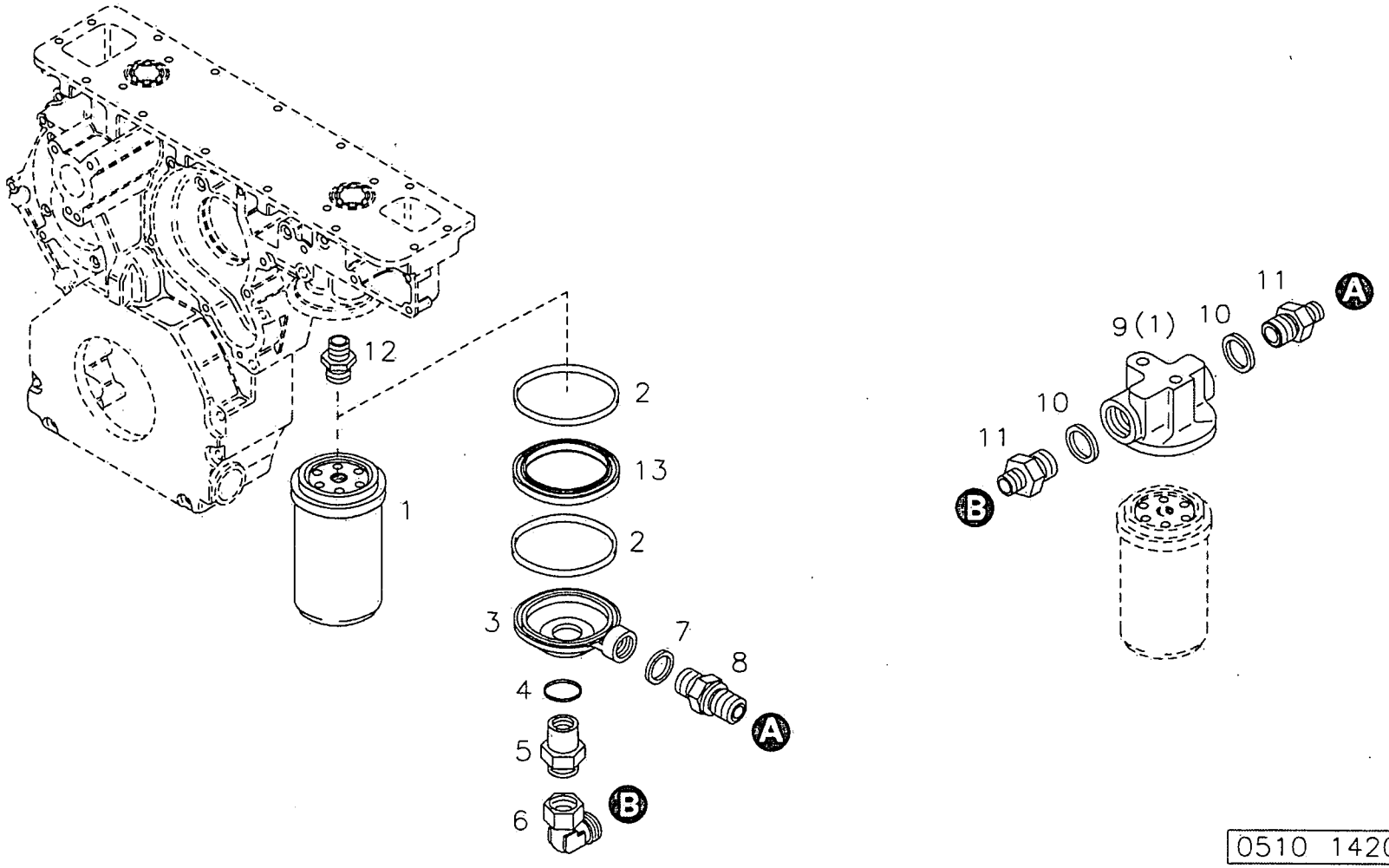

0510 1420 002

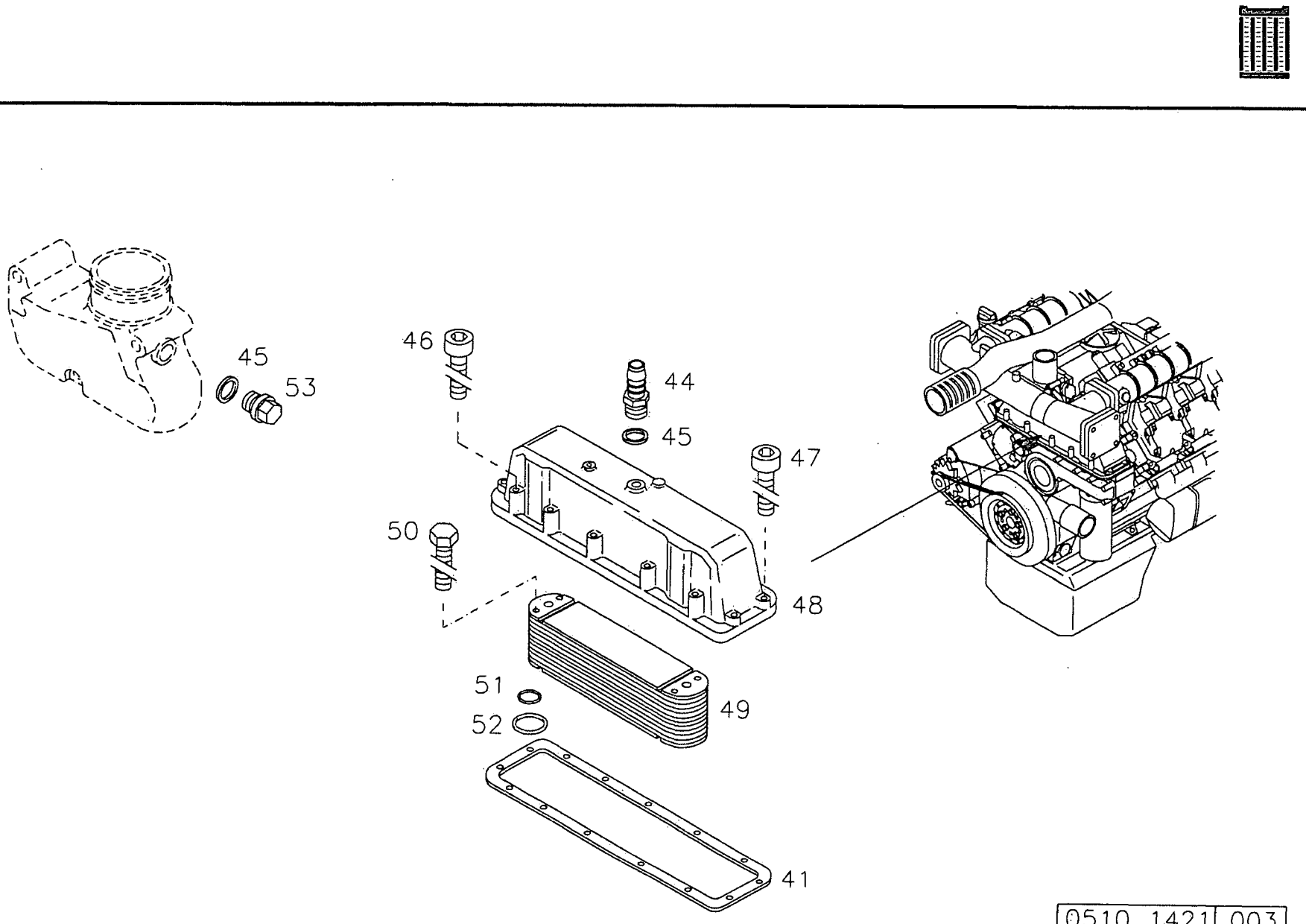
15
45
53
46
44
45
47
50
48
51
52
49
41
0510 1421 003

16

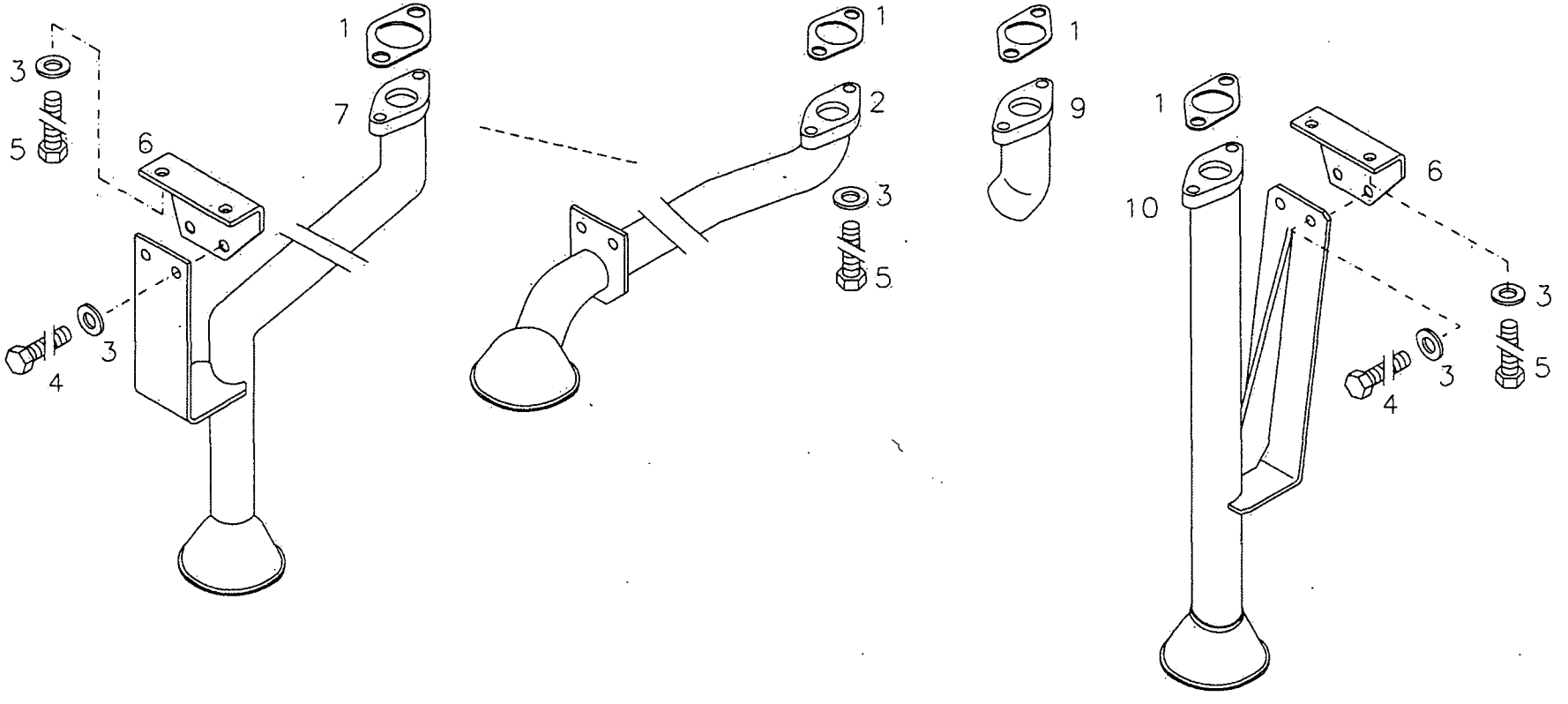

0510 1422 002

16

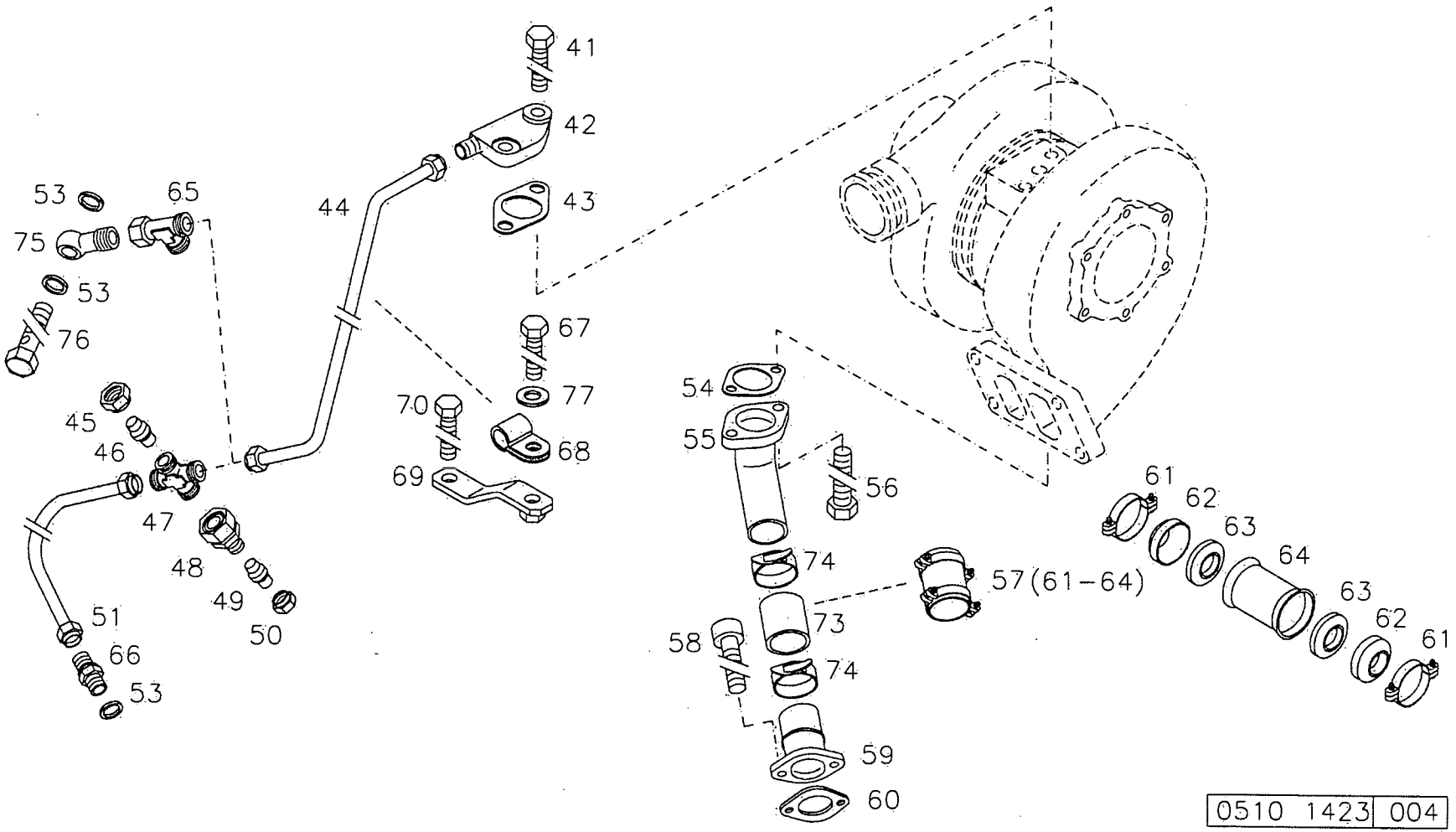
41
42
43
44
53
65
75
53
76
67
77
70
68
69
45
46
47
48
49
50
51
66
53
54
55
56
74
57(61-64)
73
58
74
59
60
61
62
63
64
63
62
61
0510 1423 004

17

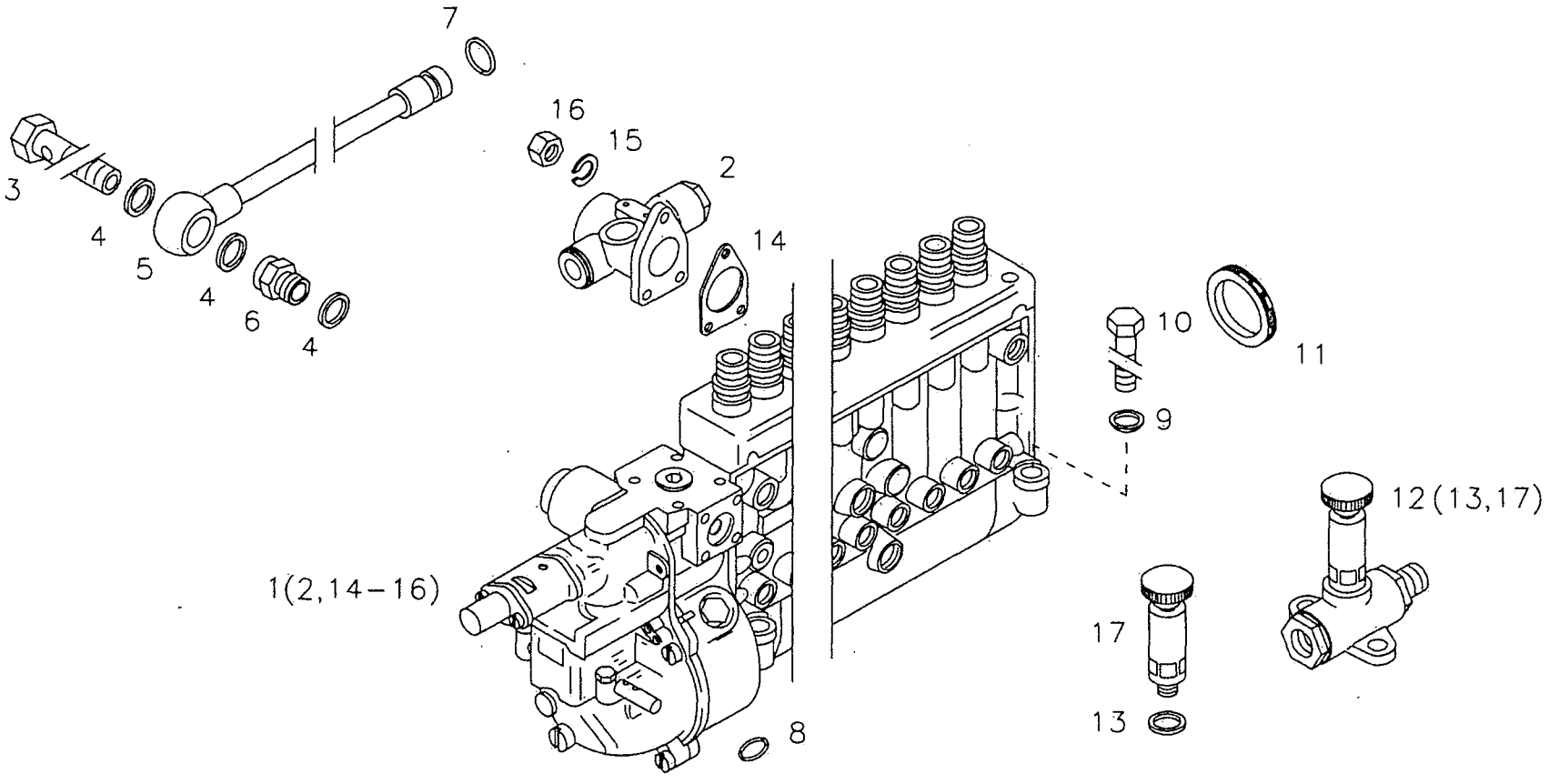

0510 1424 001

0510 1425 000

18

19

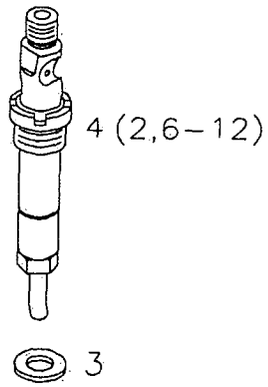

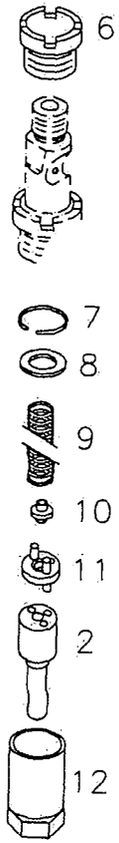

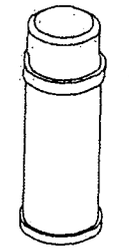

0510 1426 002

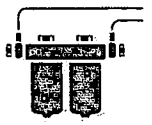

20

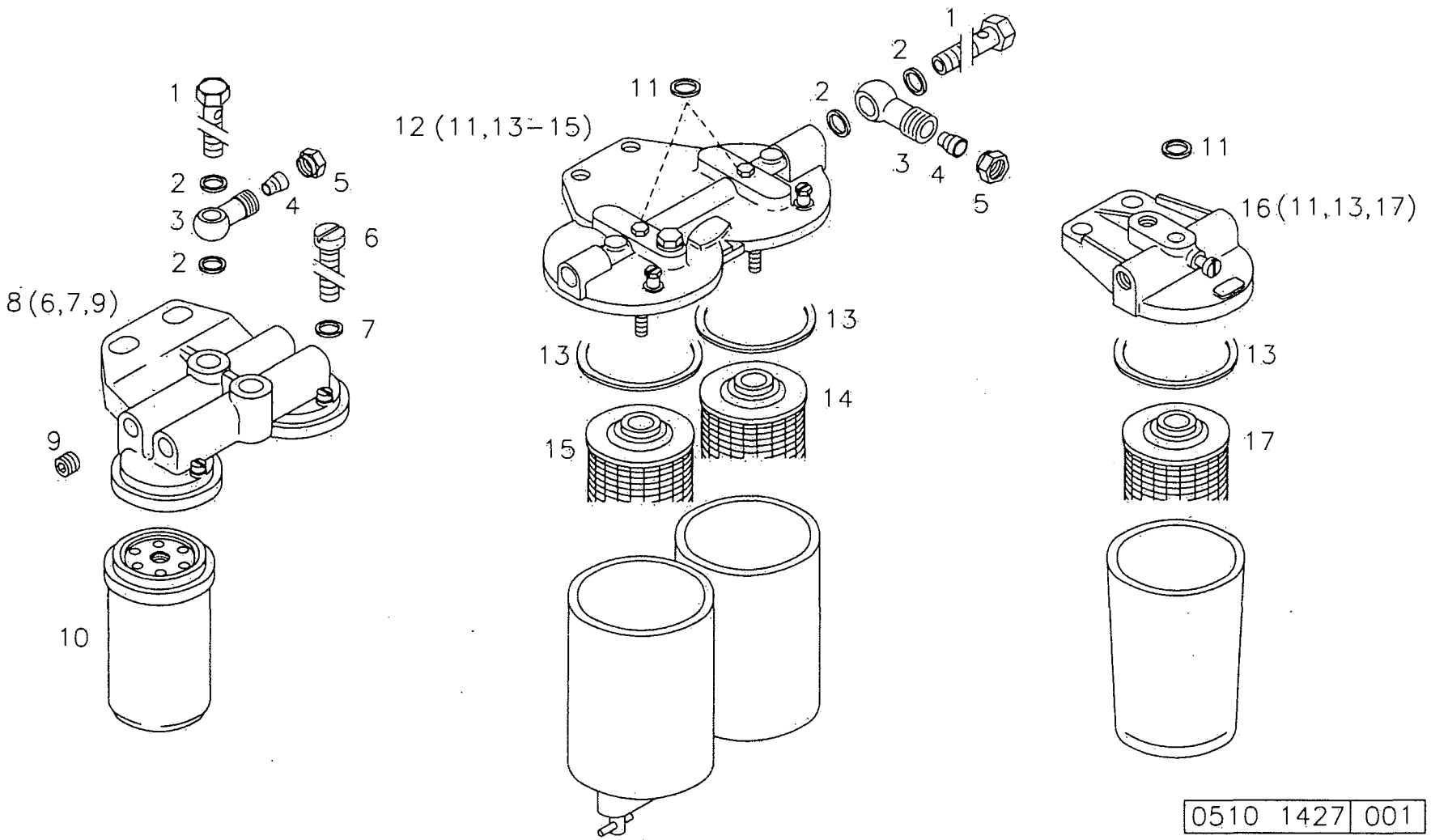

0510 1427 001

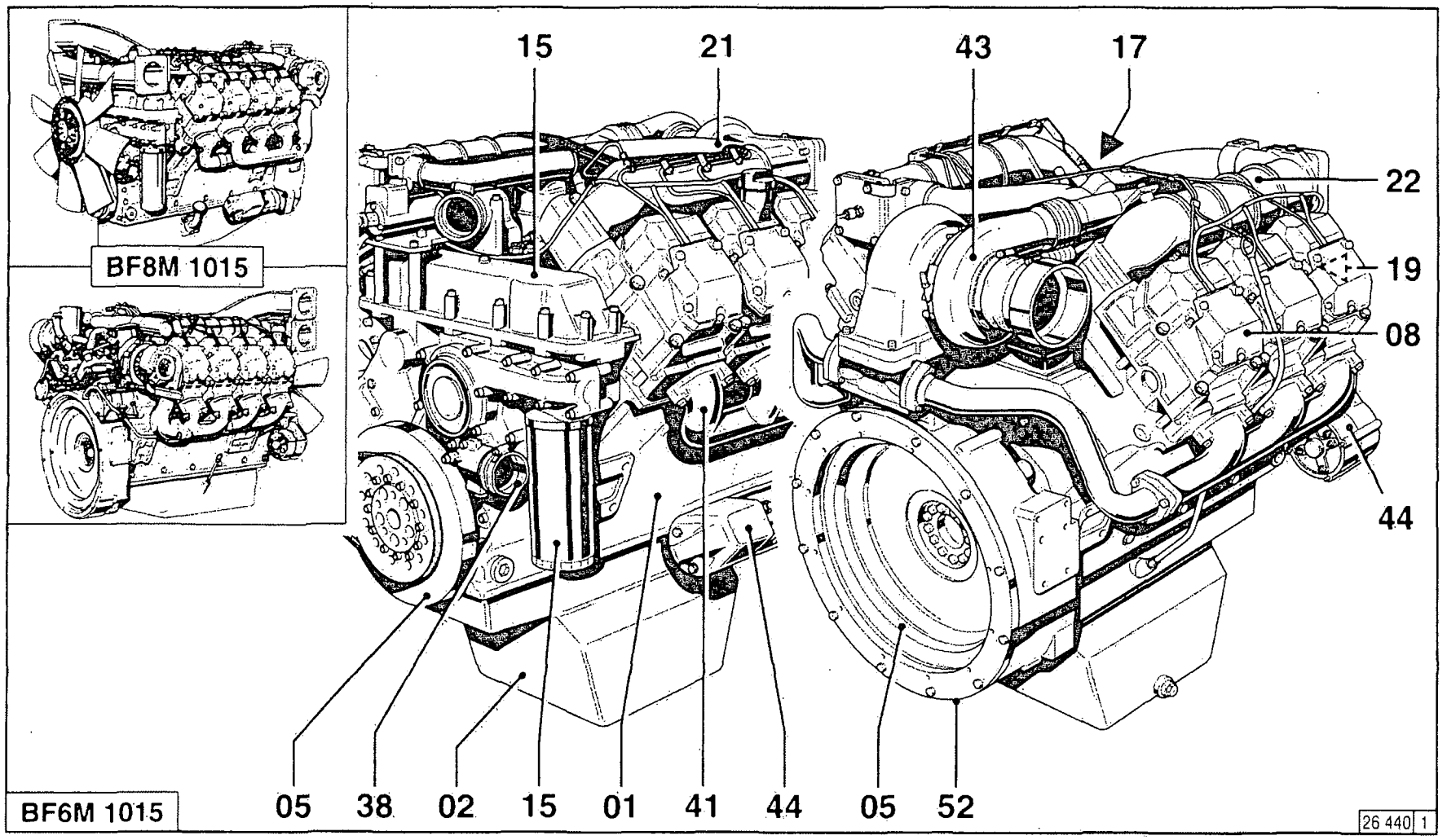
BF8M 1015
BF6M 1015
15
21
43
17
22
19
08
44
05
38
02
15
01
41
44
05
52
26 440 1

29
22
27
22
26
21
21
29

21

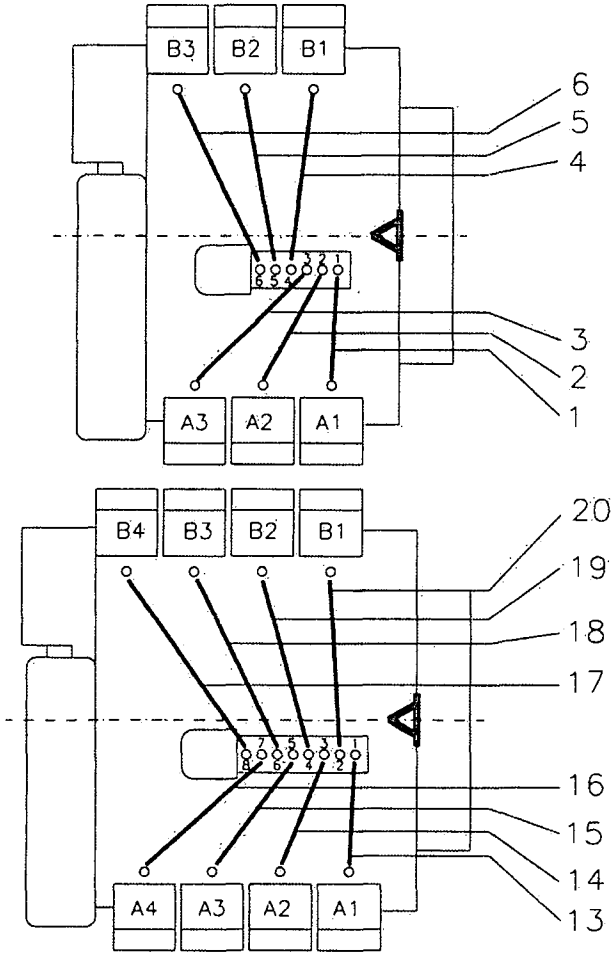

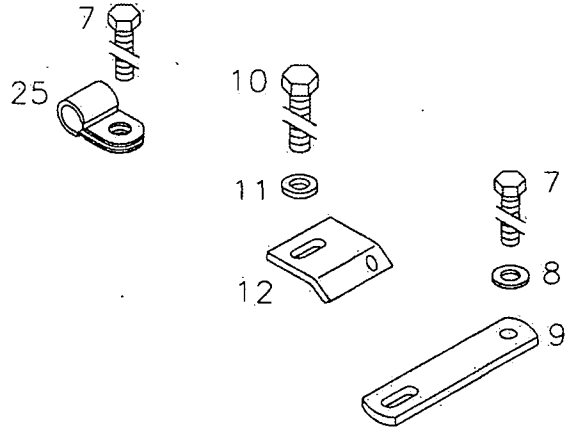

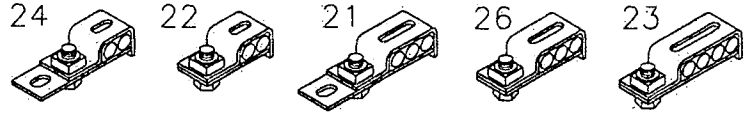

0510 1428 003

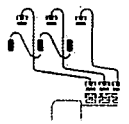

21

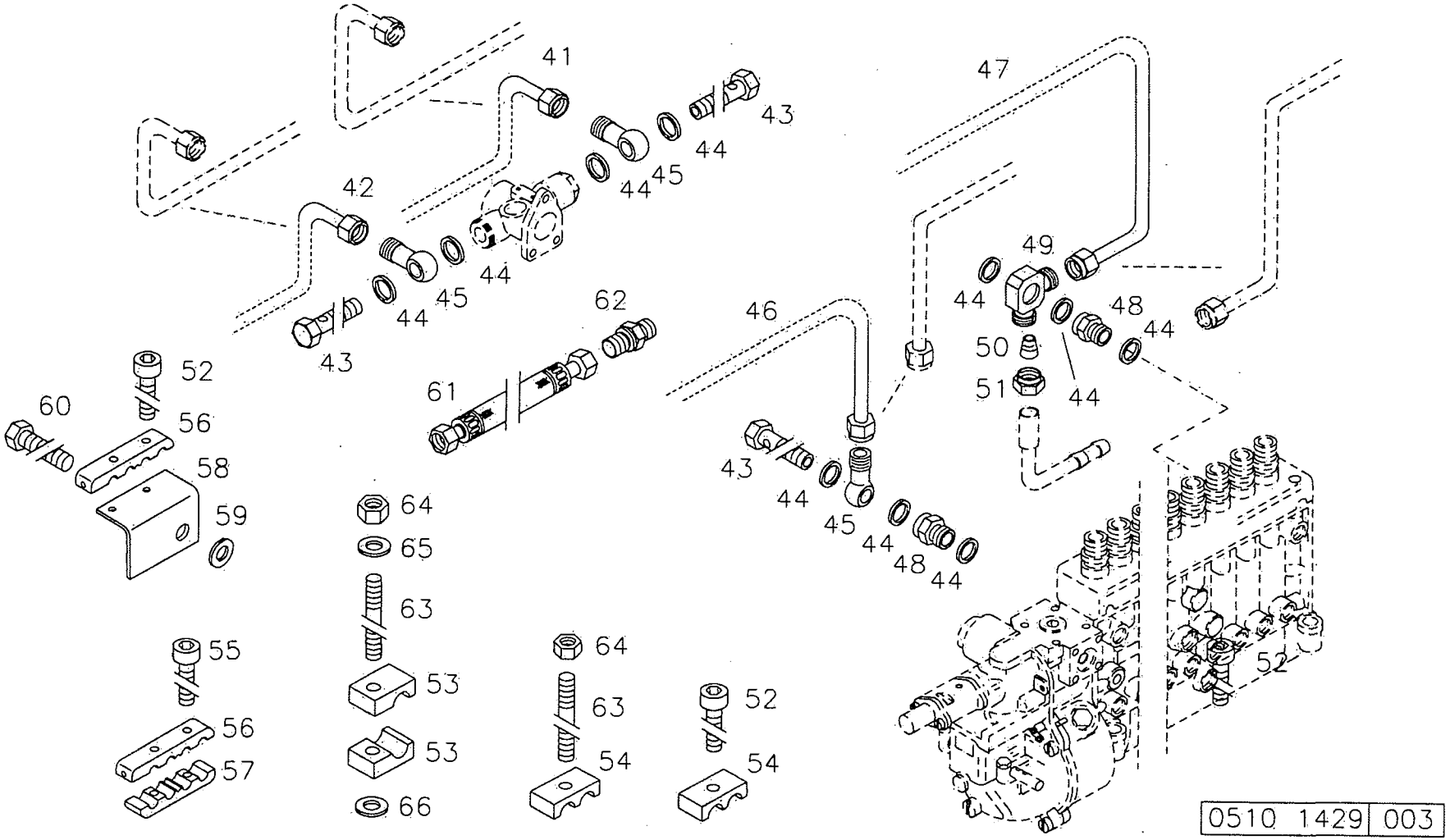
41
42
43
44
45
46
47
48
49
50
51
52
53
54
55
56
57
58
59
60
61
62
63
64
65
66
0510 1429 003

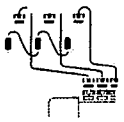

21

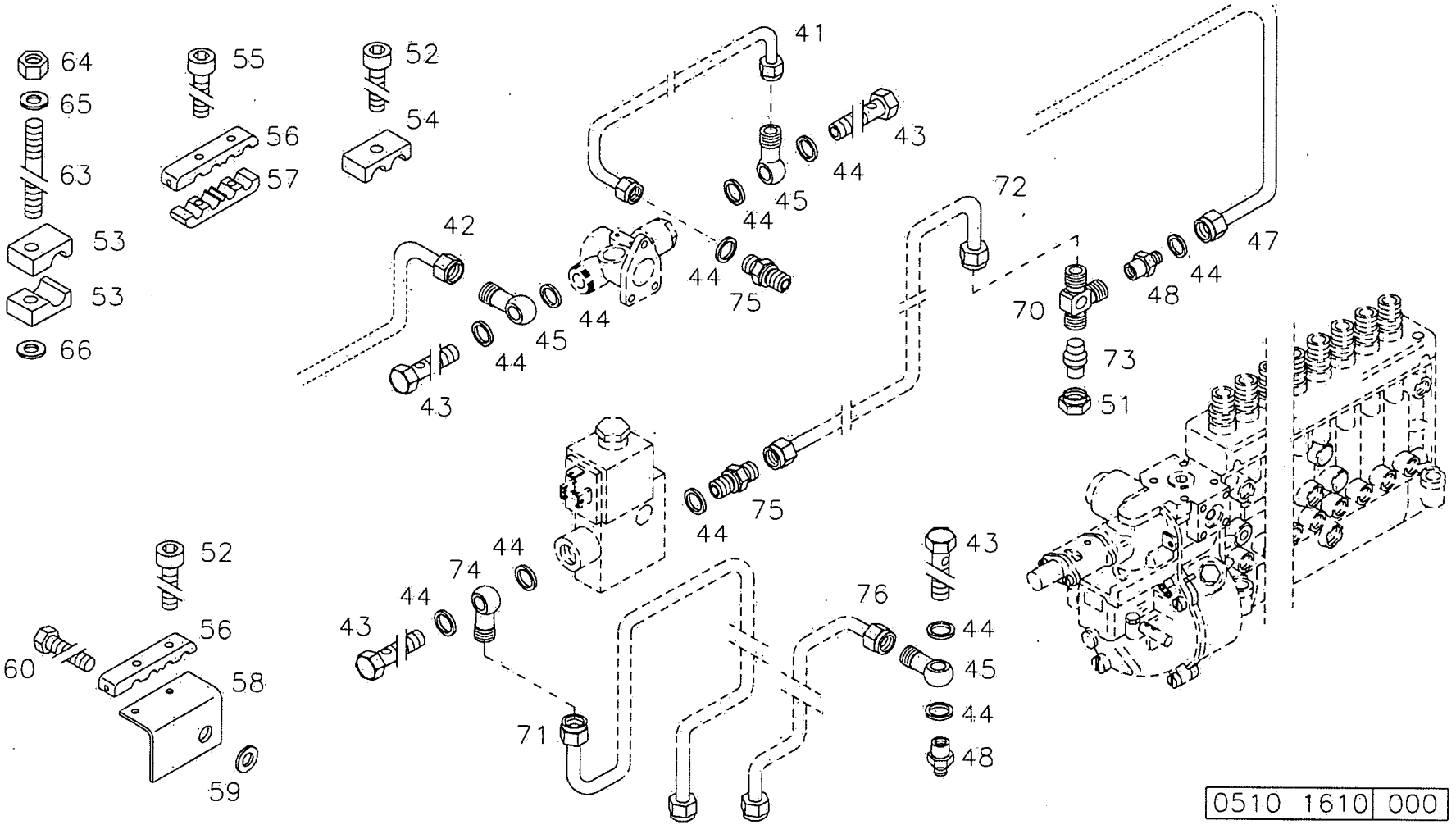
64
65
63
53
53
66
55
56
57
52
54
41
43
44
45
44
42
44
75
44
45
44
43
72
70
48
44
47
73
51
75
44
52
56
60
58
59
44
74
44
43
71
76
43
44
45
44
48
0510 1610 000

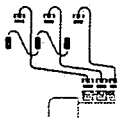

21

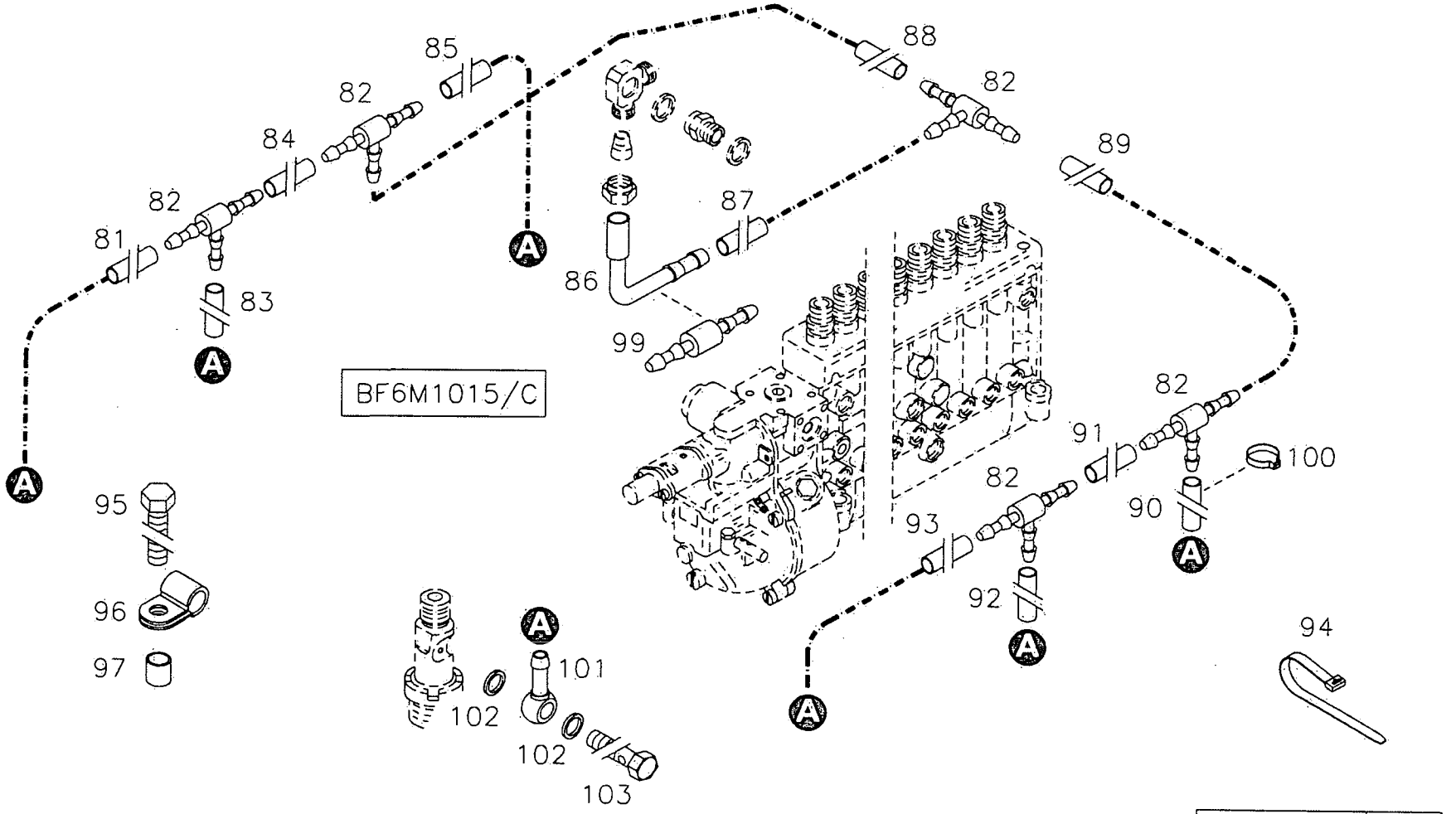

0510 1457 002

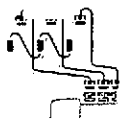

21

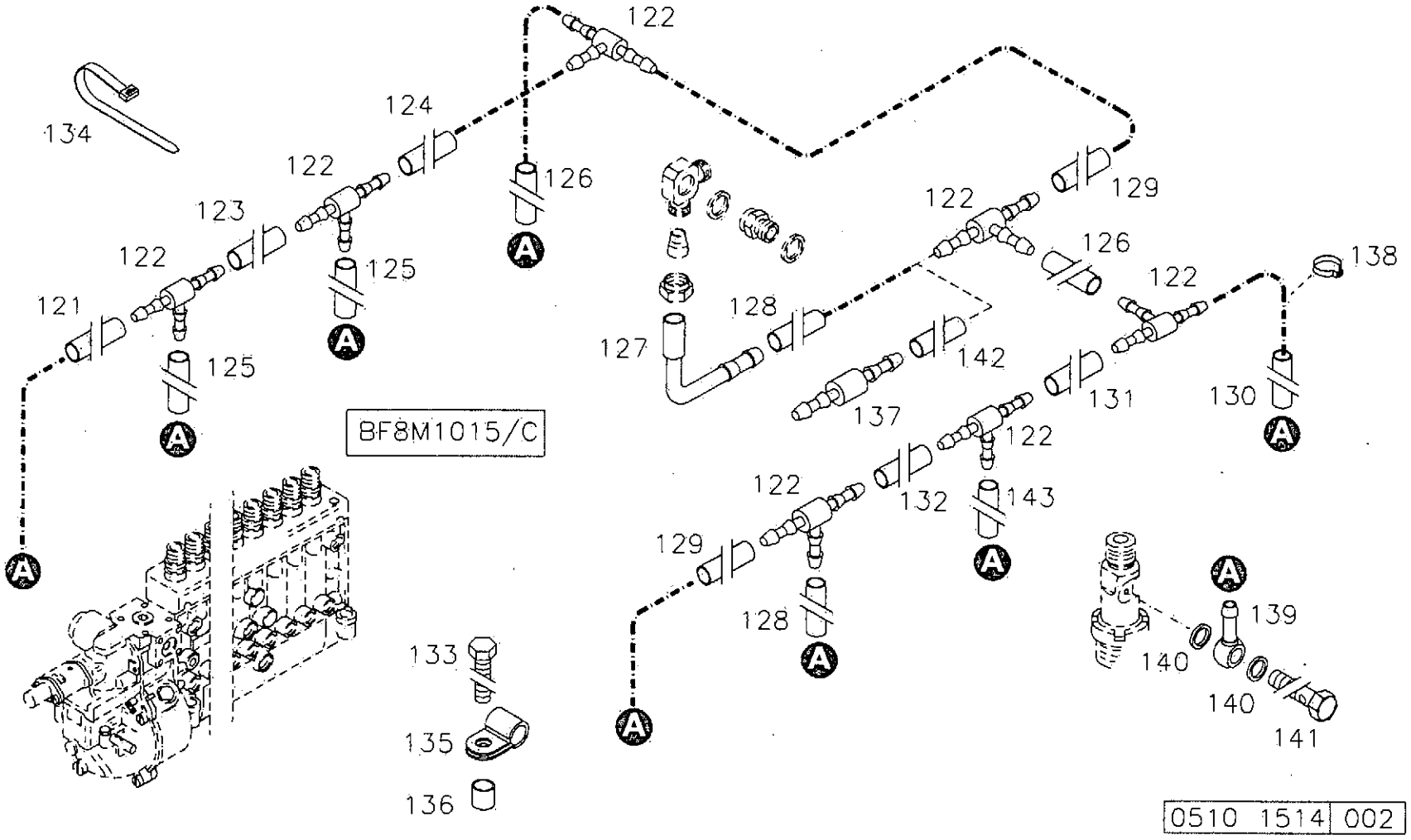
122
134
124
122
123
122
121
125
125
126
BF8M1015/C
127
128
122
126
129
122
138
142
137
131
130
122
122
132
143
129
128
133
135
136
139
140
140
141
0510 1514 002

22

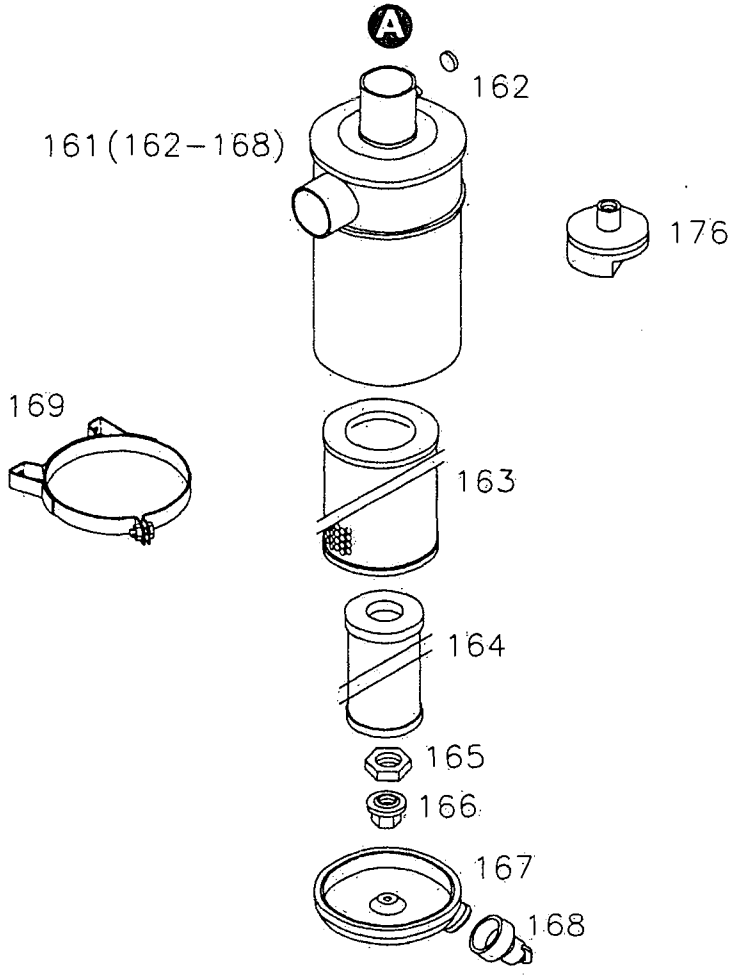

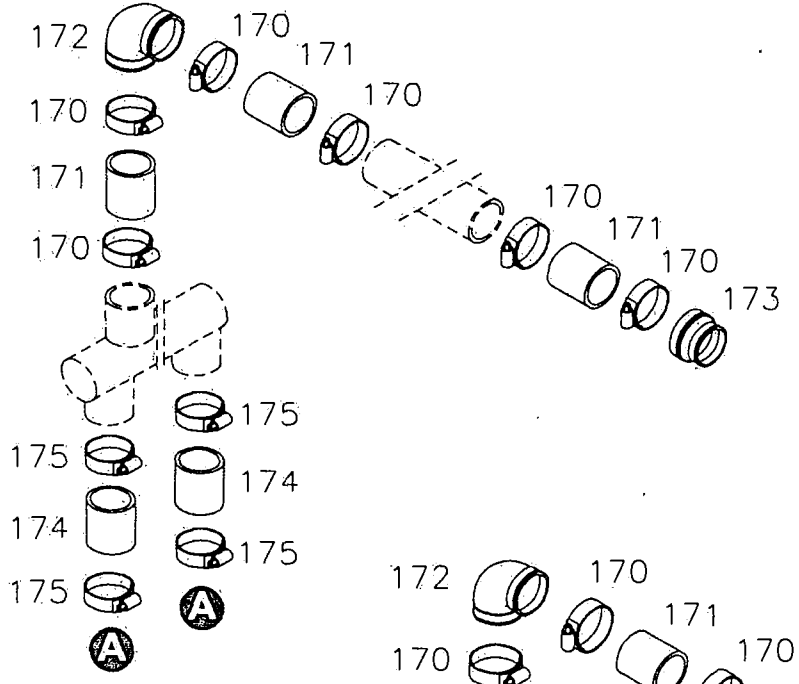

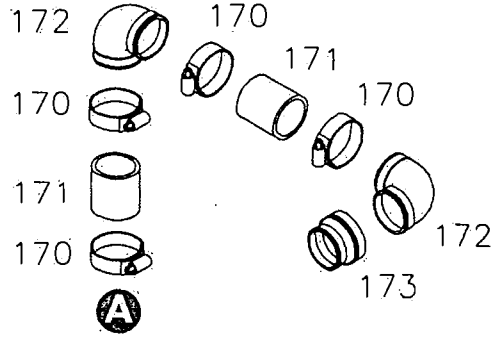

0510	1585	001

22

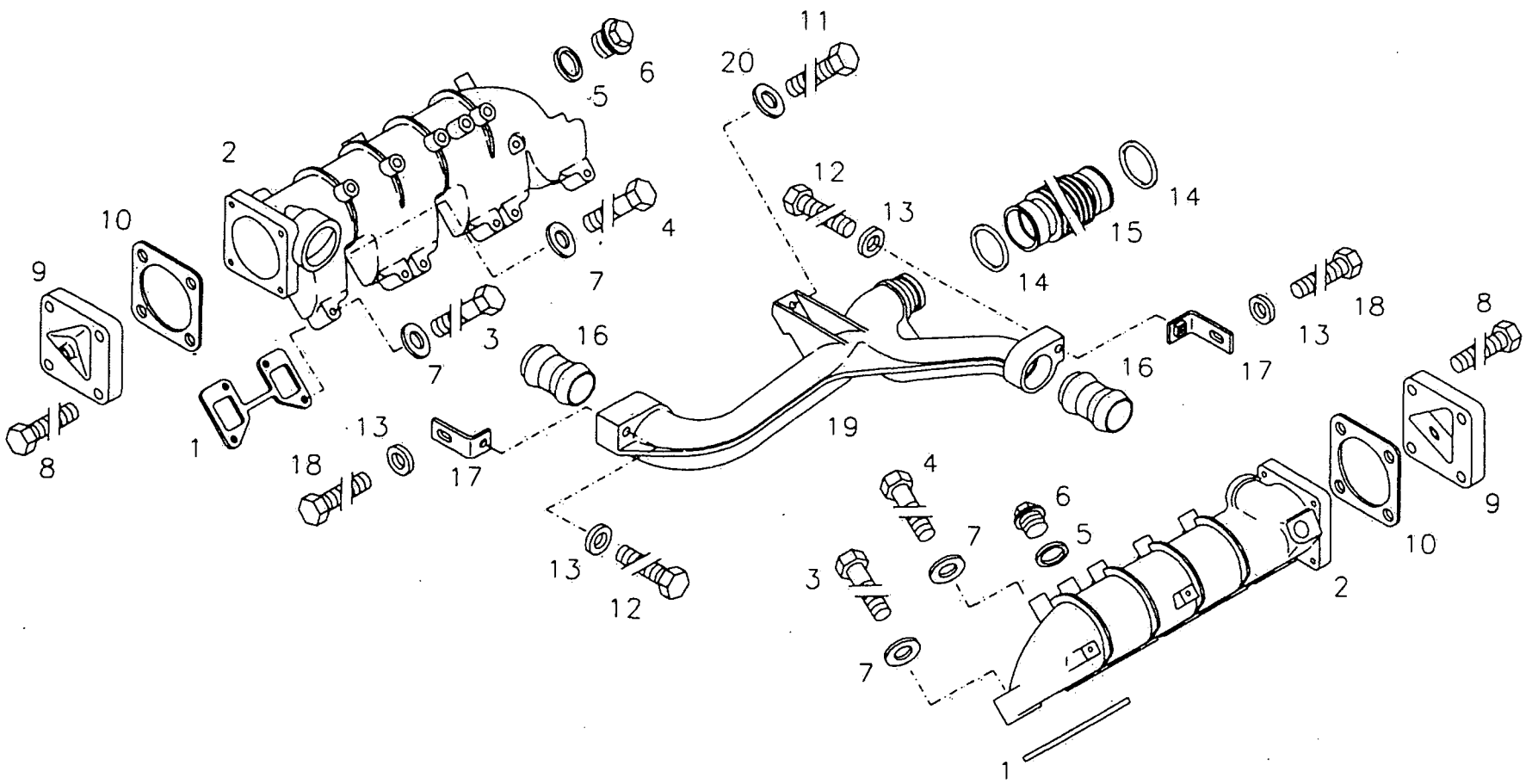

22

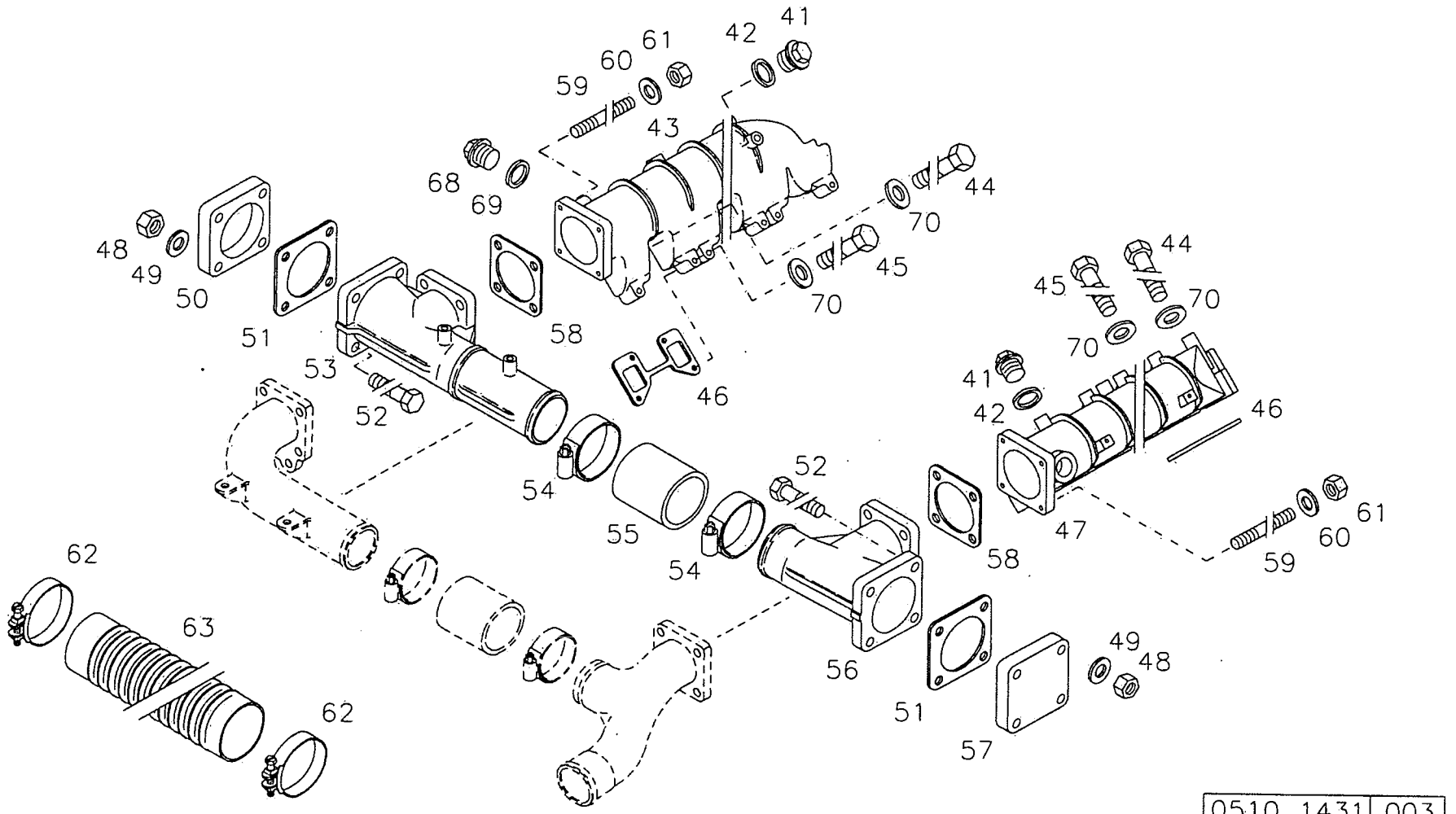

0510 1431 003

22

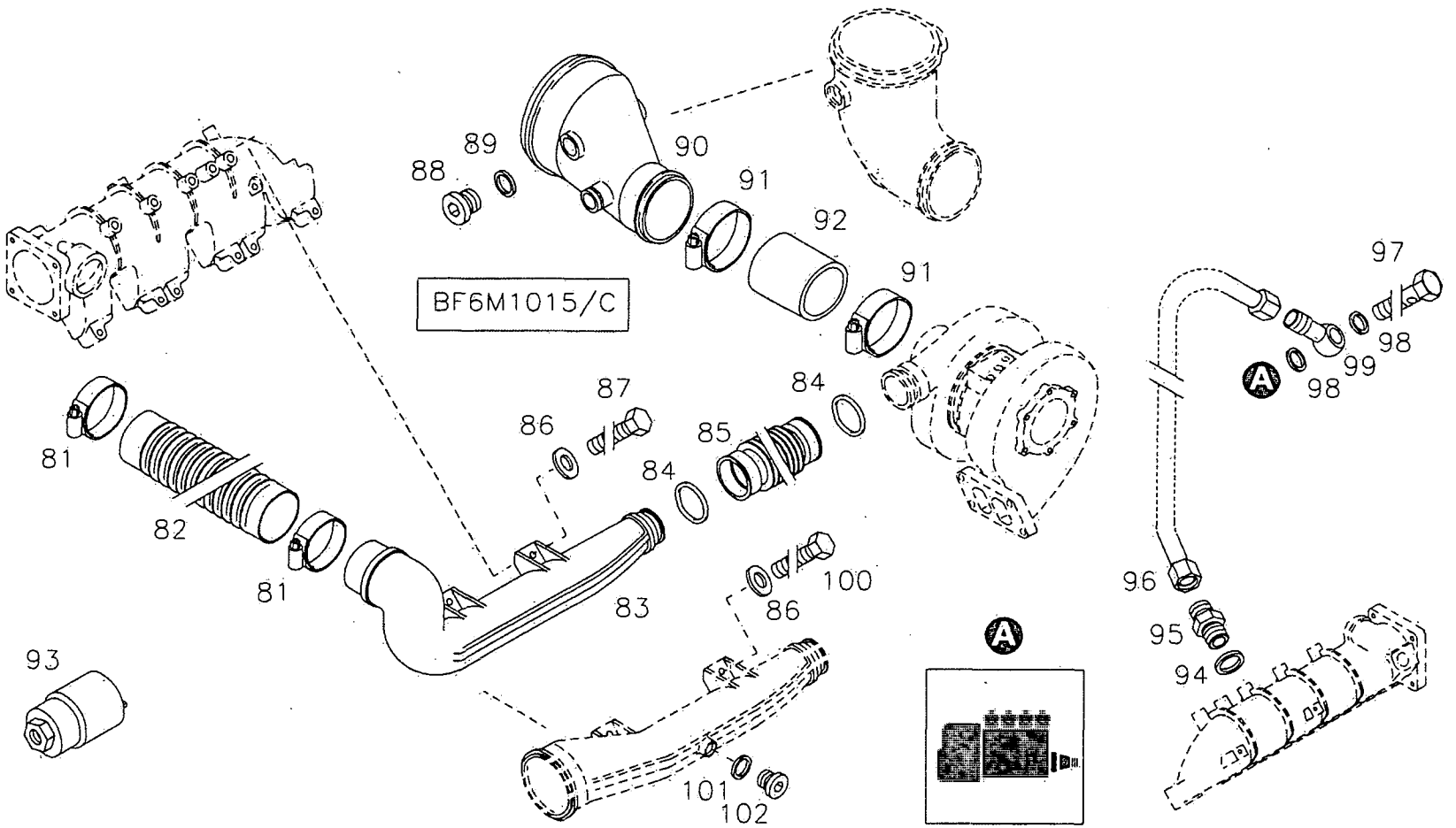
BF6M1015/C
88
89
90
91
92
91
97
98
99
98
87
86
85
84
84
81
82
81
83
100
86
96
95
94
93
101
102
A
A
0510 1432 003

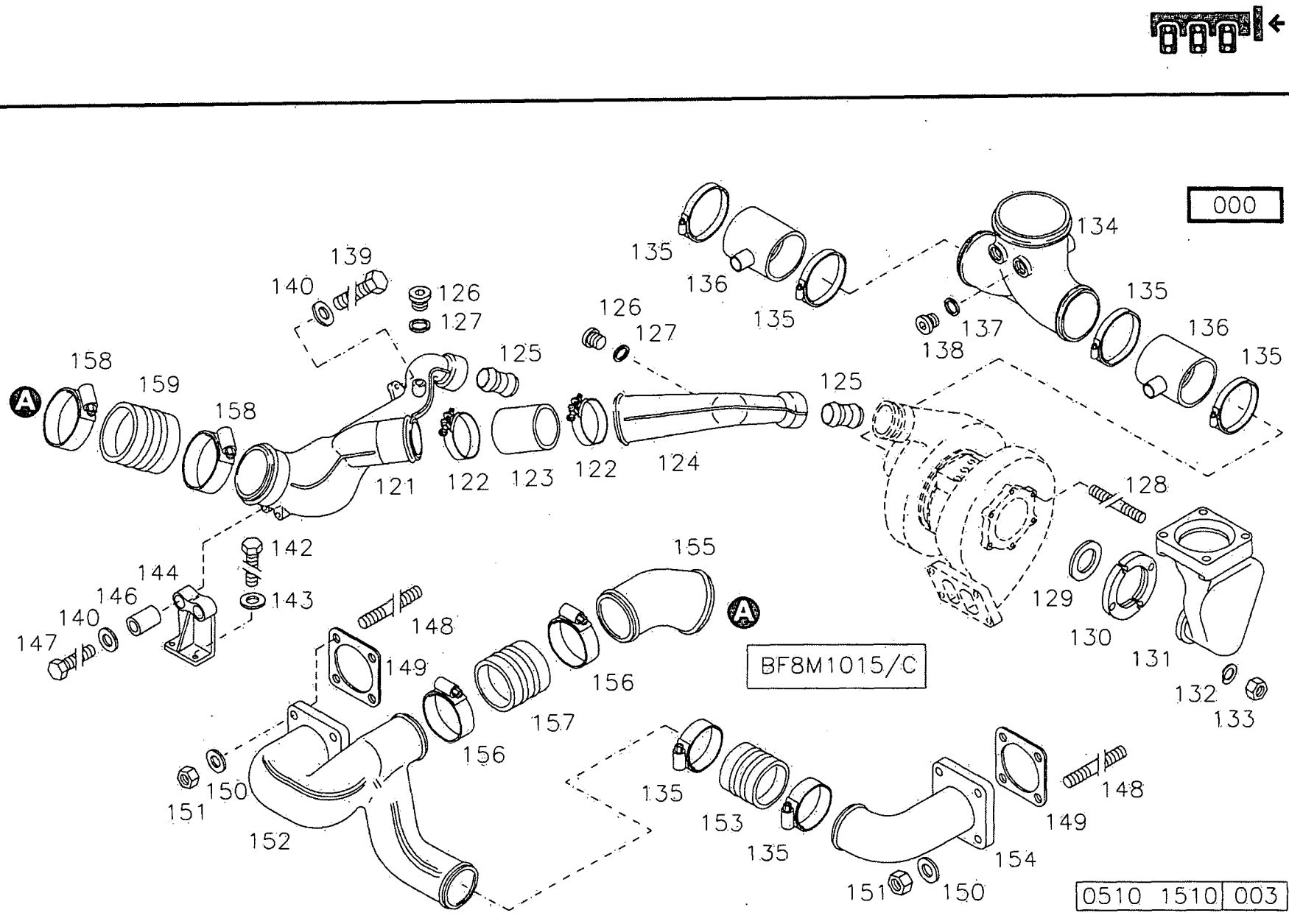
22
000
135
136
135
134
135
136
135
137
138
139
140
126
127
126
127
125
125
158
159
158
121
122
123
122
124
128
129
130
131
132
133
142
143
144
146
140
147
148
149
155
156
157
156
BF8M1015/C
150
151
152
135
153
135
154
149
148
151
150
0510 1510 003

26

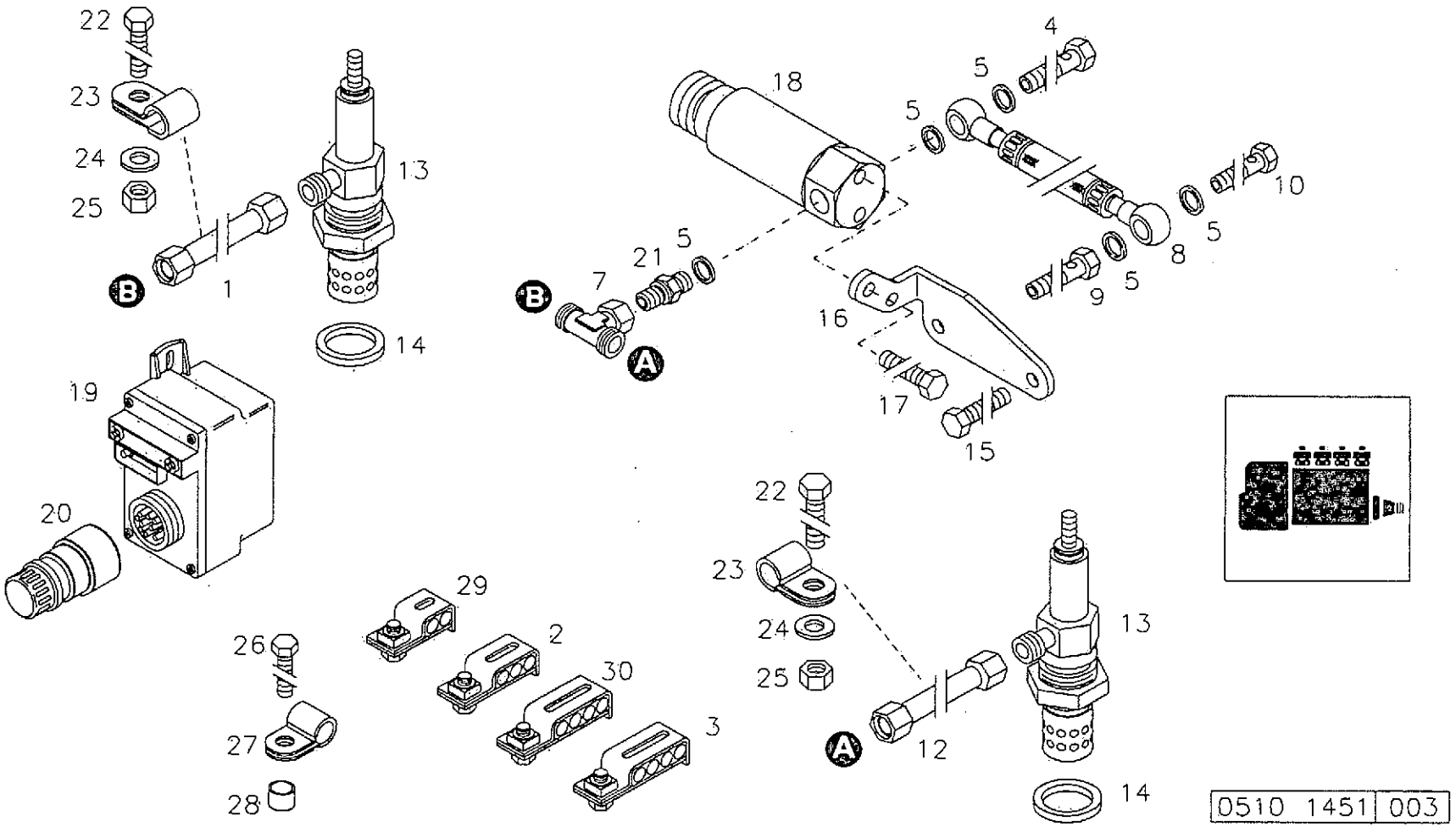
22
23
24
25
1
B
13
14
19
20
18
4
5
5
10
5
8
9
5
21
5
7
B
A
16
17
15
22
23
24
25
13
12
A
14
29
2
30
3
26
27
28
0510 1451 003

27

0510 1511 002

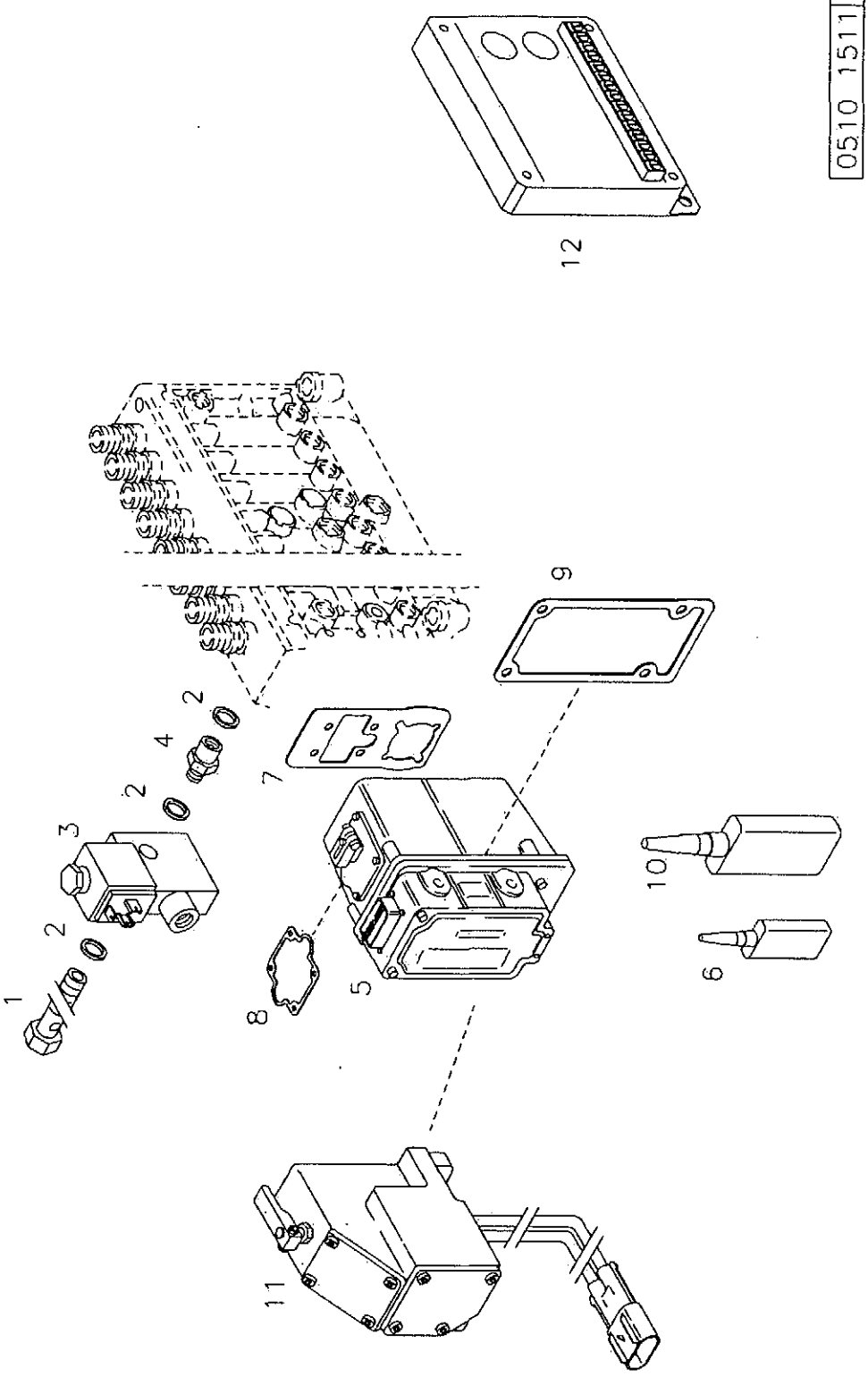

29

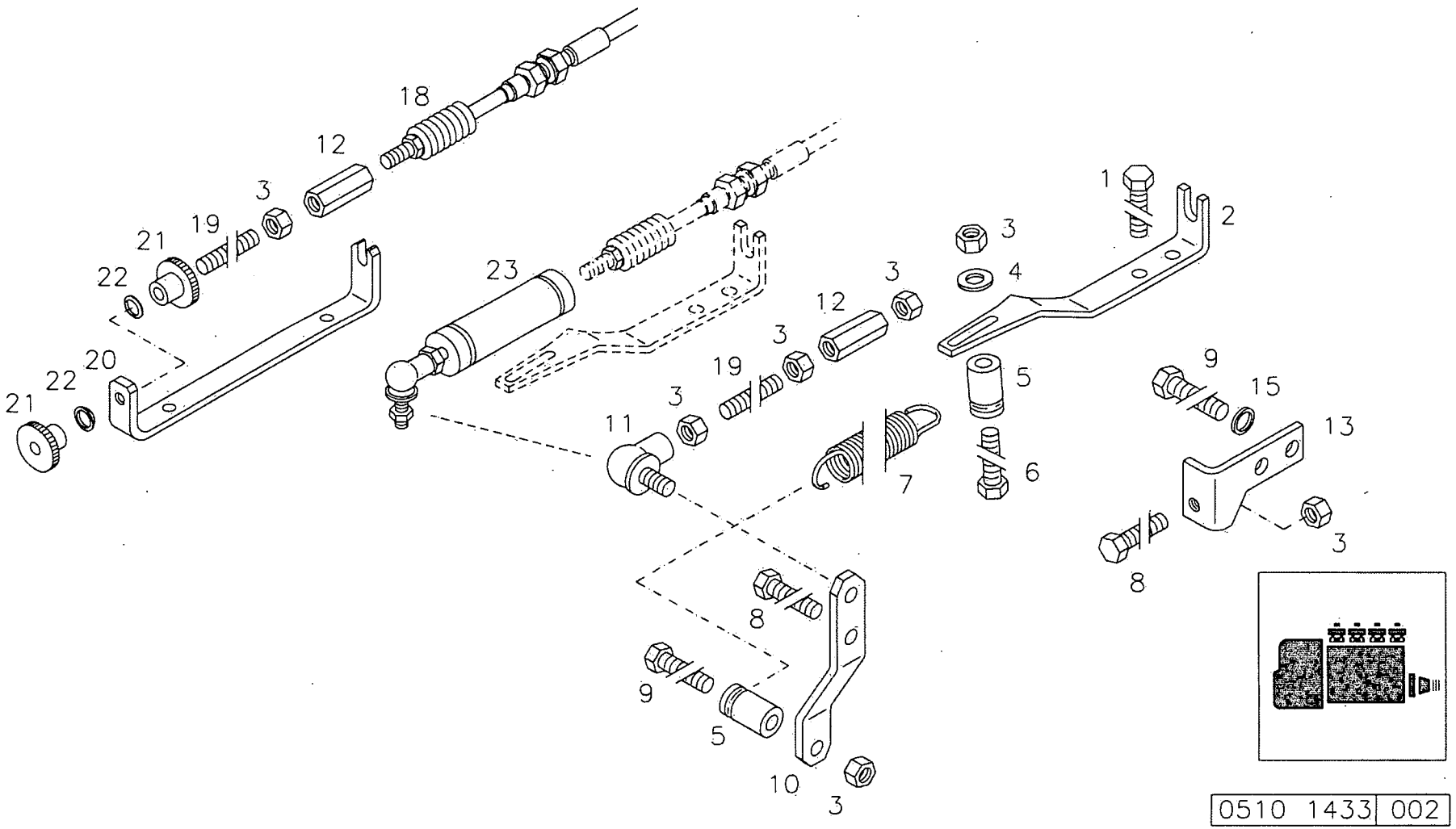

0510 1433 002

0510 1584 001
60
61
62
41
42
43
44
45
46
47
48
49
51
52
53
54
55
56
50
57
58
63

29

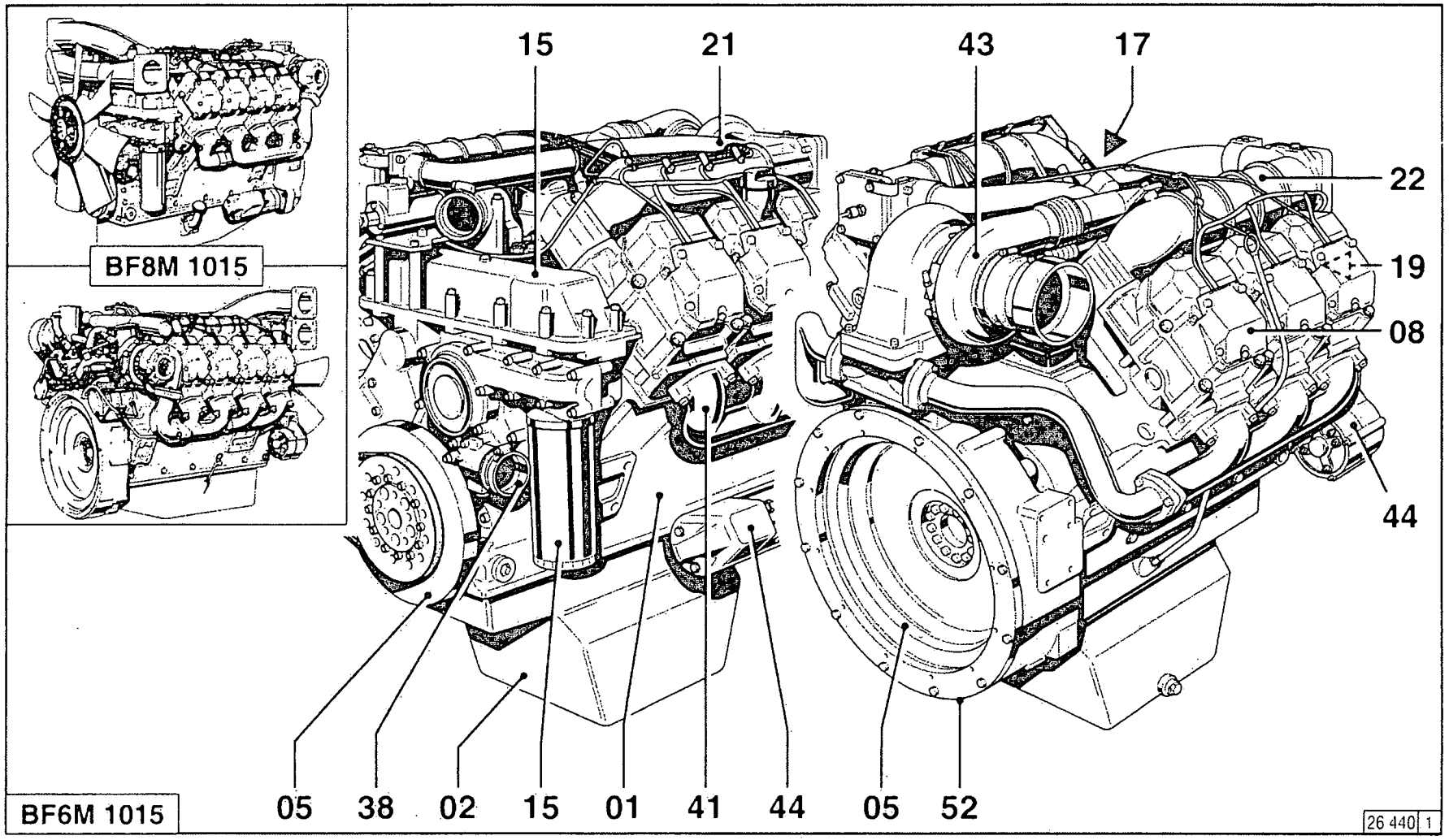
BF8M 1015
BF6M 1015
15
21
43
17
22
19
08
44
05
38
02
15
01
41
44
05
52
26 440 1

33
39

33

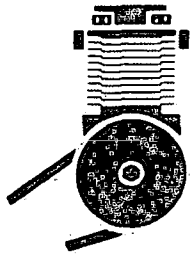

38

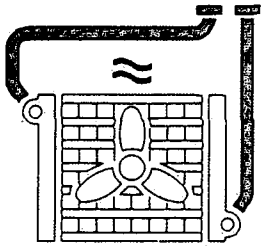

36

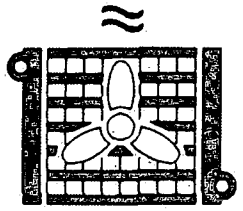

39

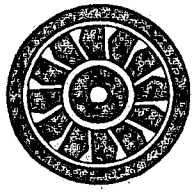

37

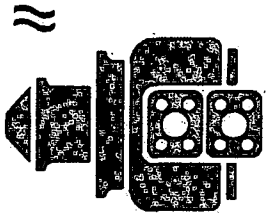

33

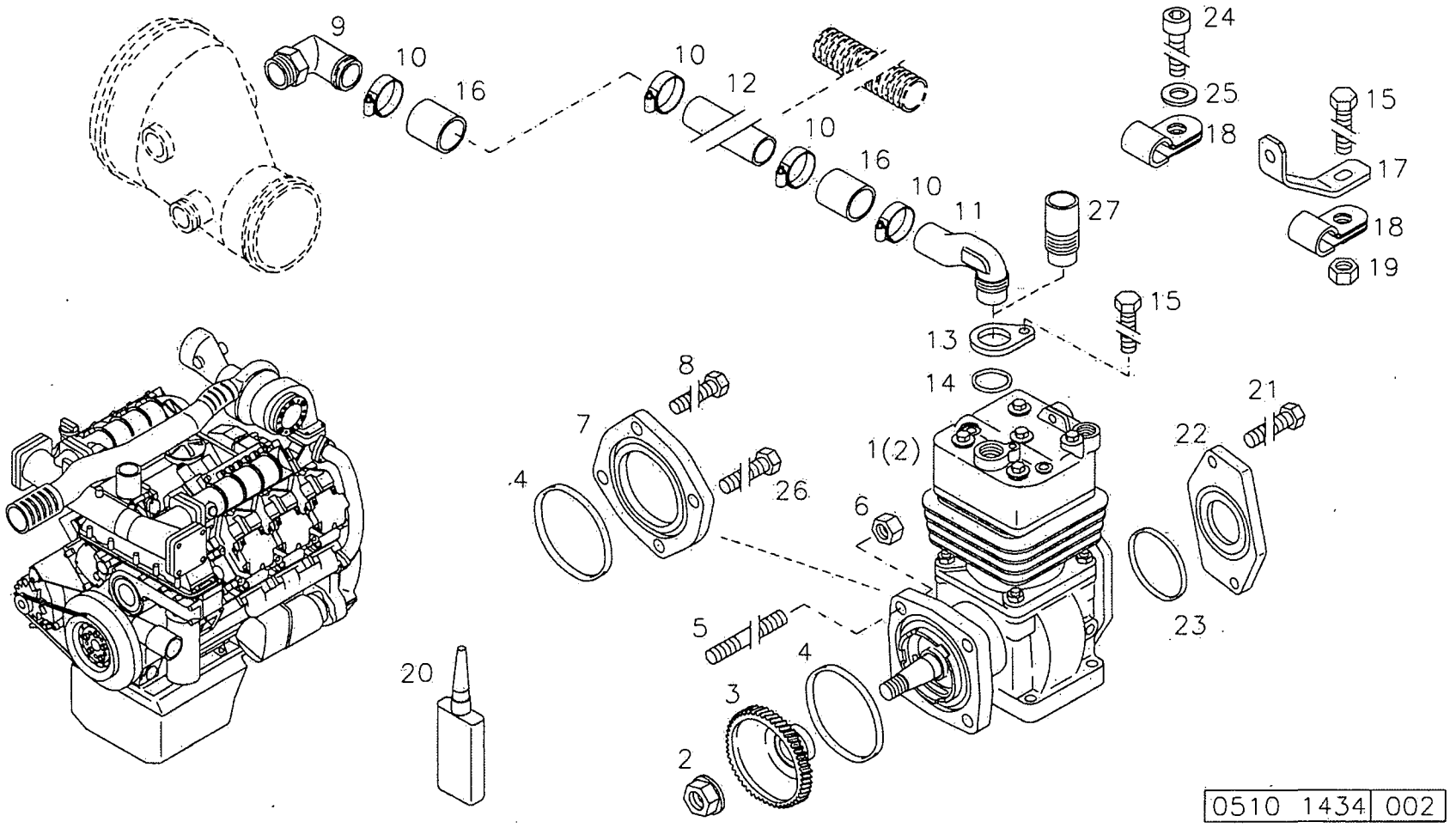
9
10
16
10
12
10
16
10
11
27
24
25
18
15
17
18
19
15
13
14
8
7
4
26
1(2)
6
21
22
23
5
4
3
2
20
0510 1434 002

33

000

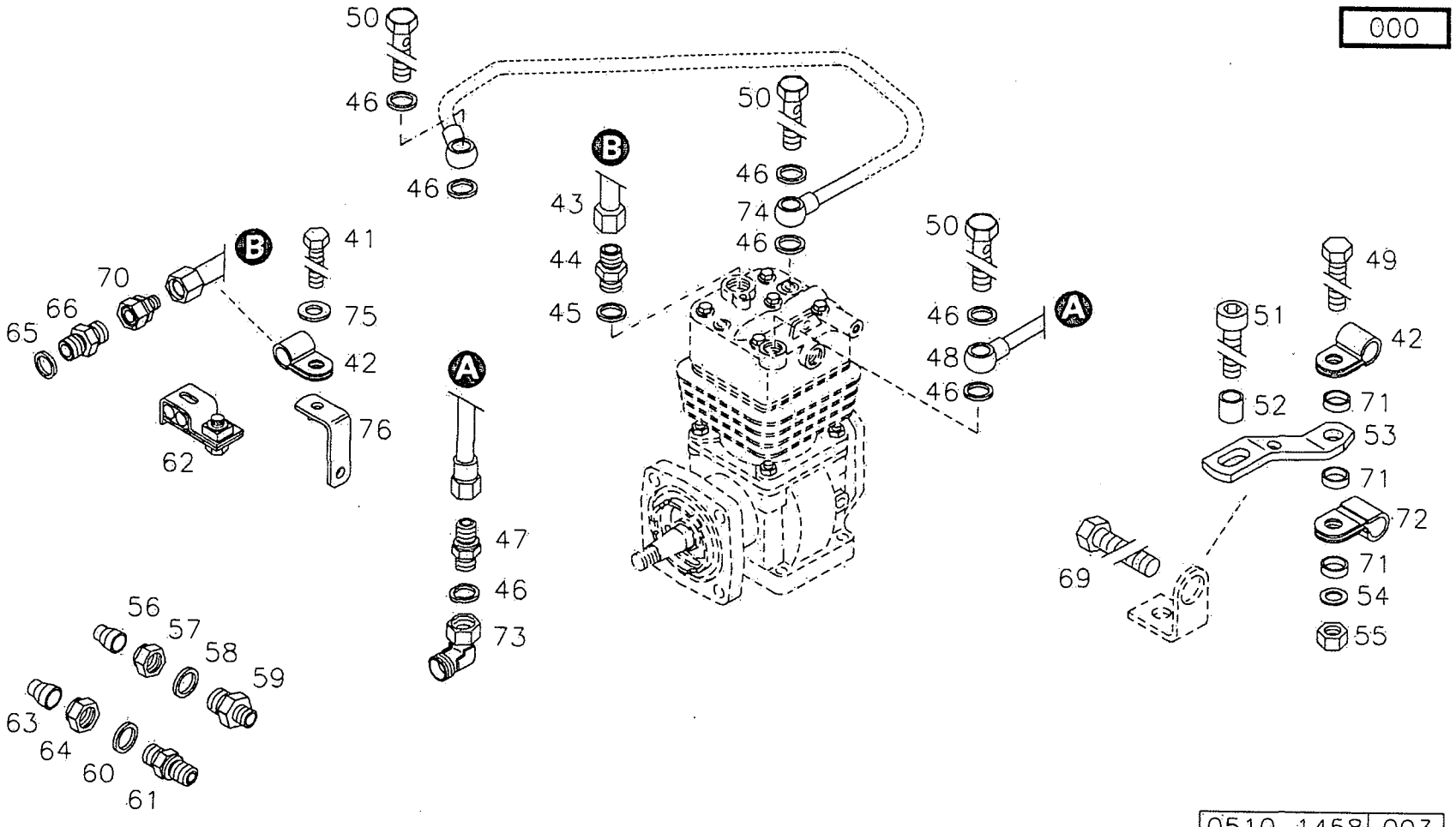

0510 1458 003

36

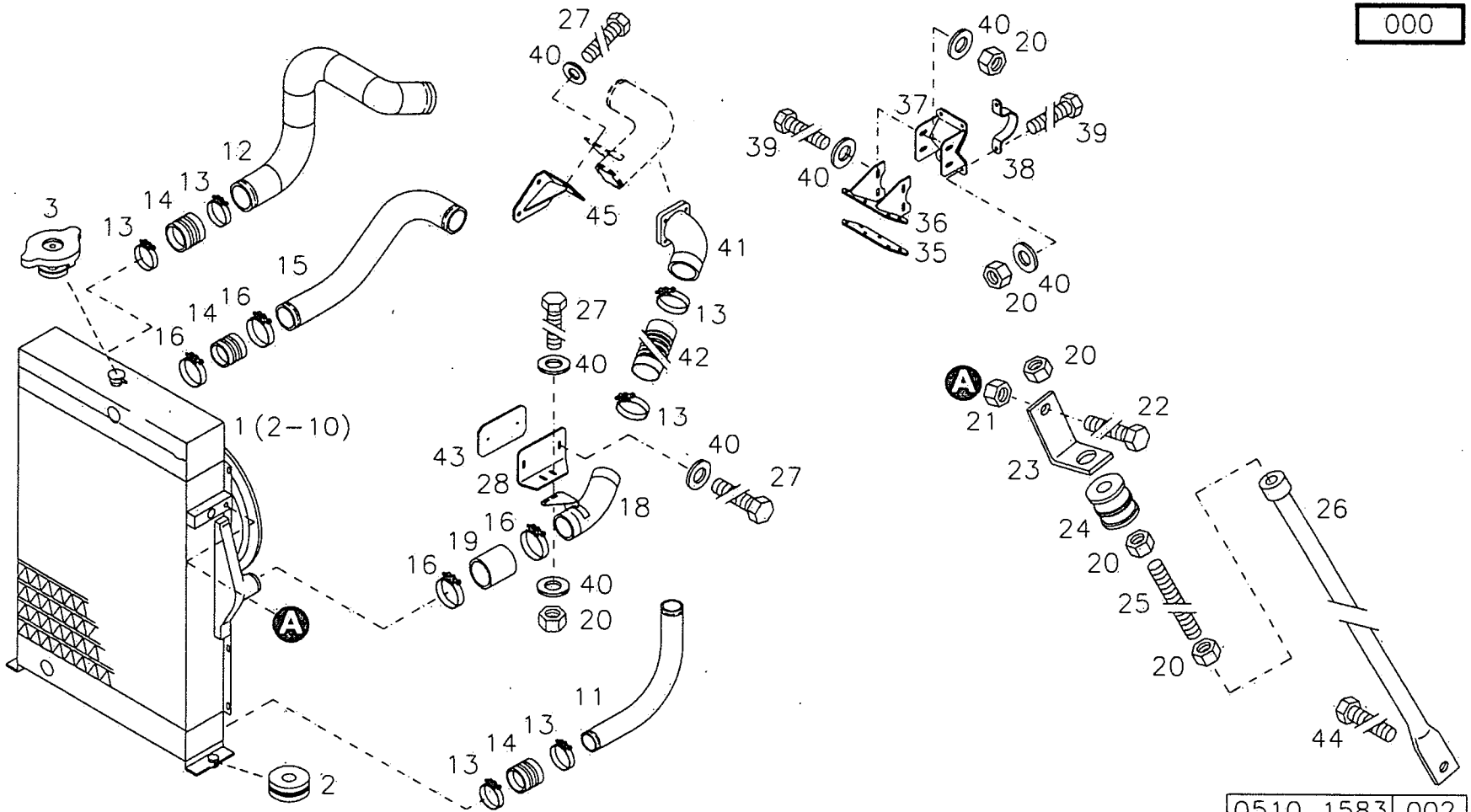

37

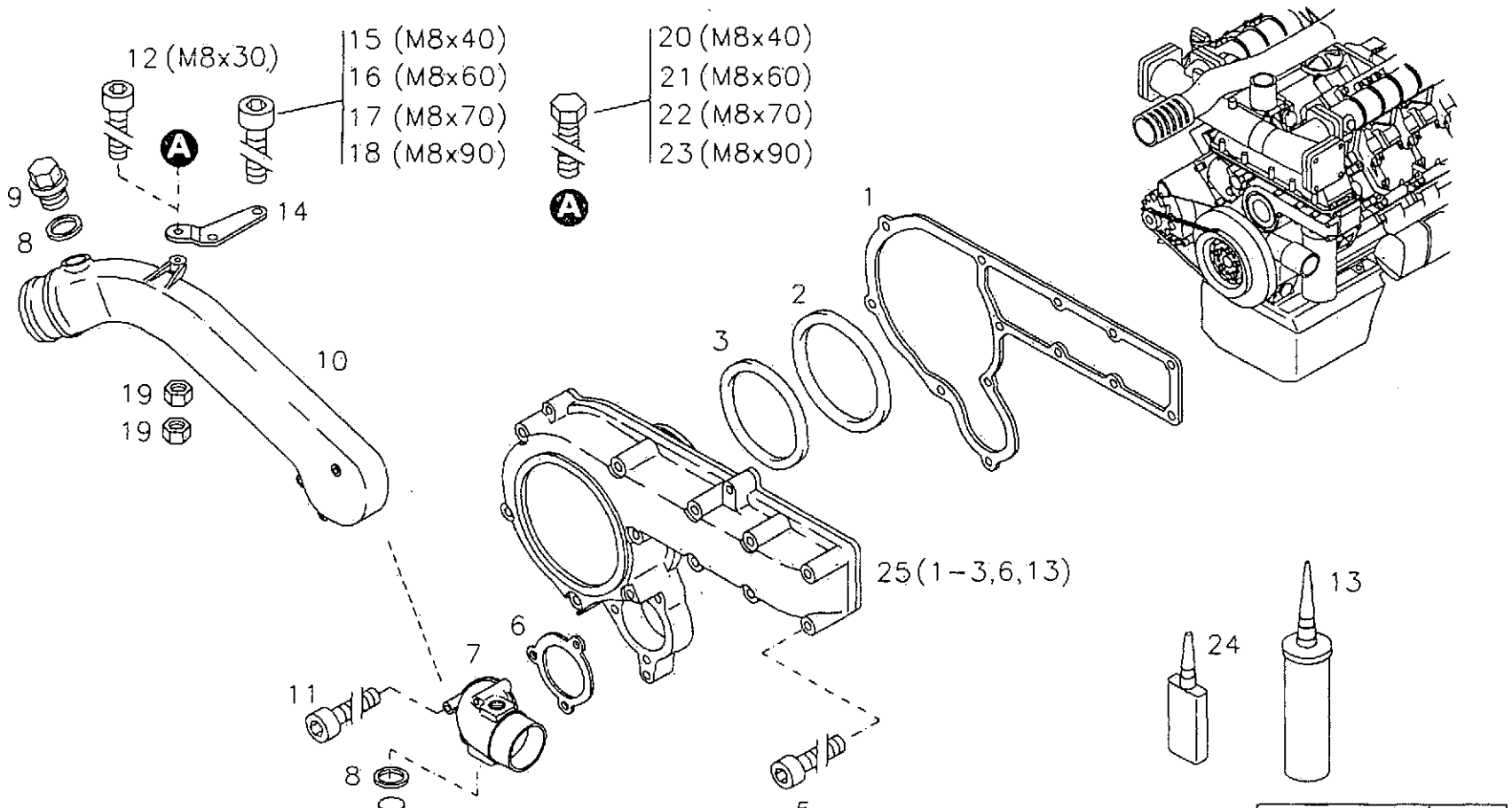
12 (M8x30)
15 (M8x40)
16 (M8x60)
17 (M8x70)
18 (M8x90)
20 (M8x40)
21 (M8x60)
22 (M8x70)
23 (M8x90)
A
A
9
8
14
1
2
3
10
19
19
25(1-3,6,13)
13
24
6
7
11
8
9
5
0510 1435 003

38

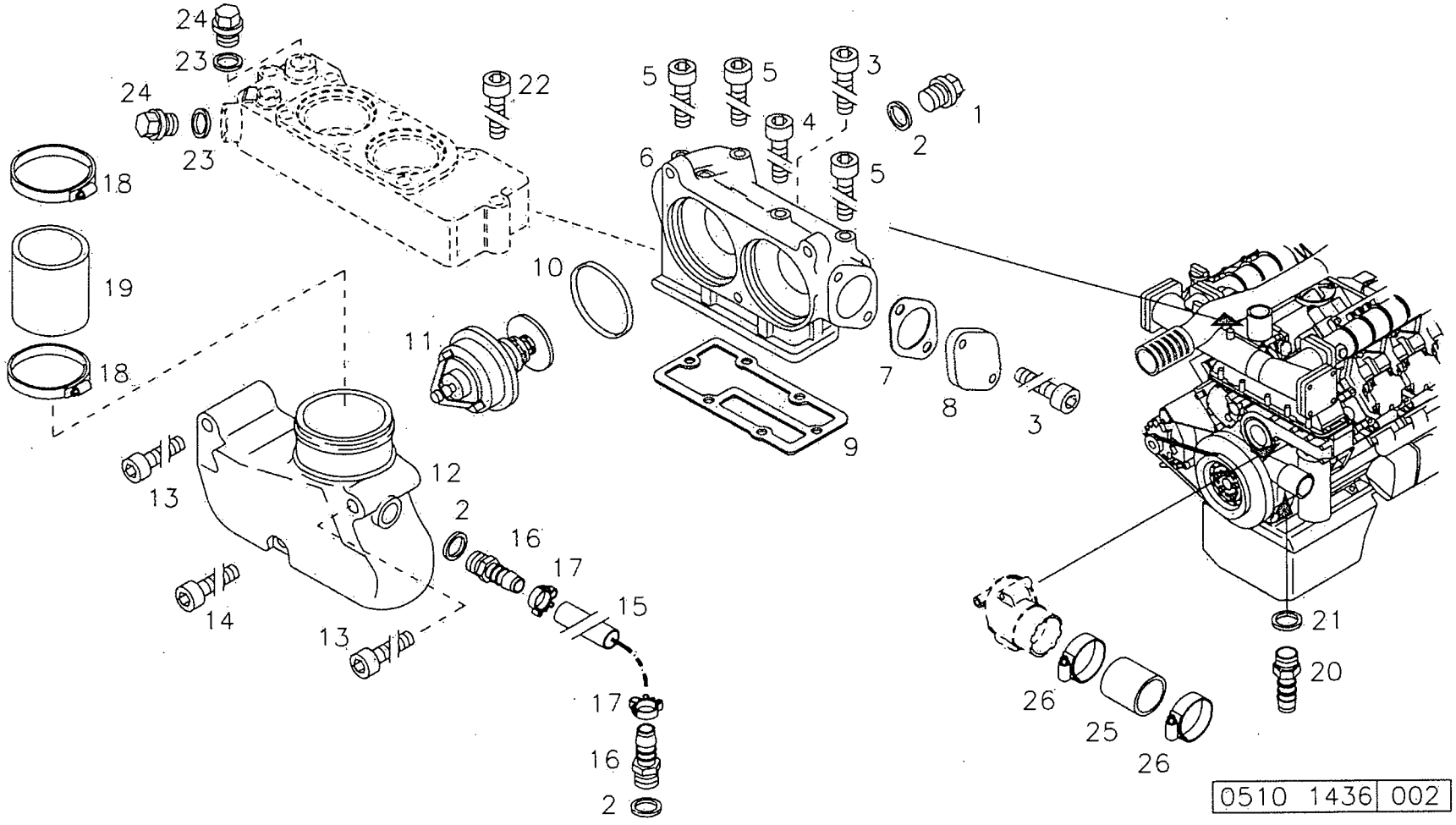
24
23
24
23
22
5
5
3
4
5
1
2
6
18
19
18
10
11
7
8
3
9
12
13
2
16
17
15
14
13
17
16
2
21
20
26
25
26
0510 1436 002

39

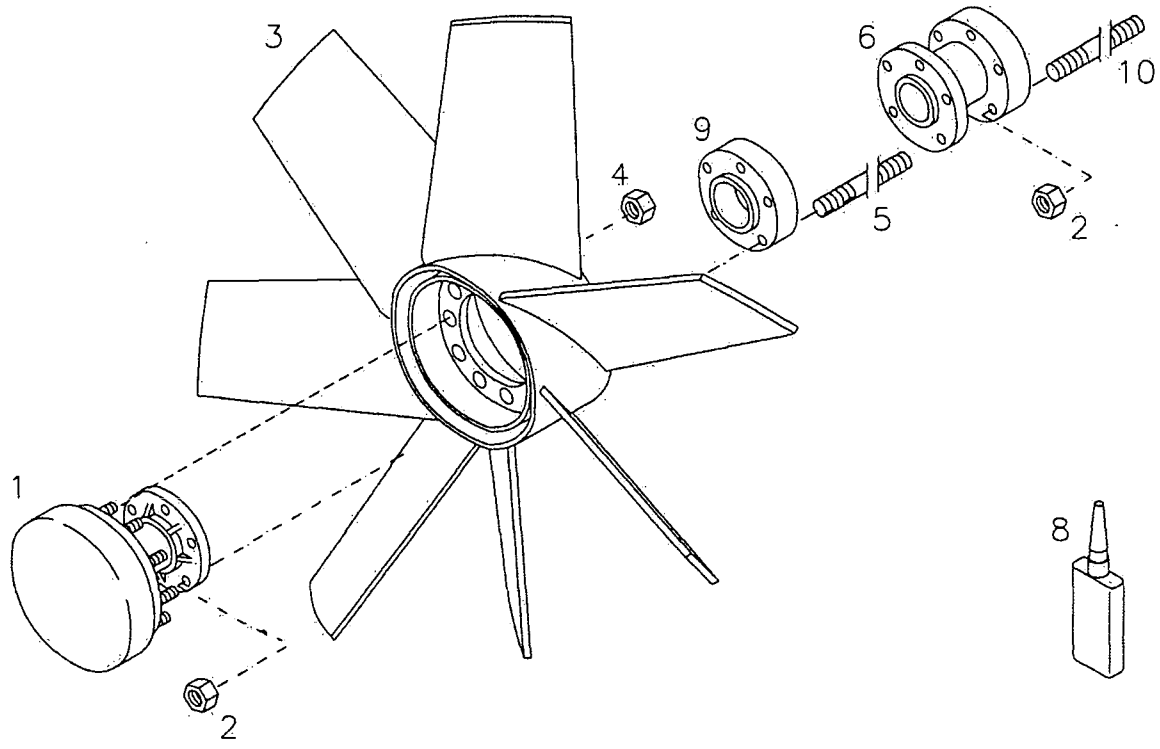

0510 1438 002

39

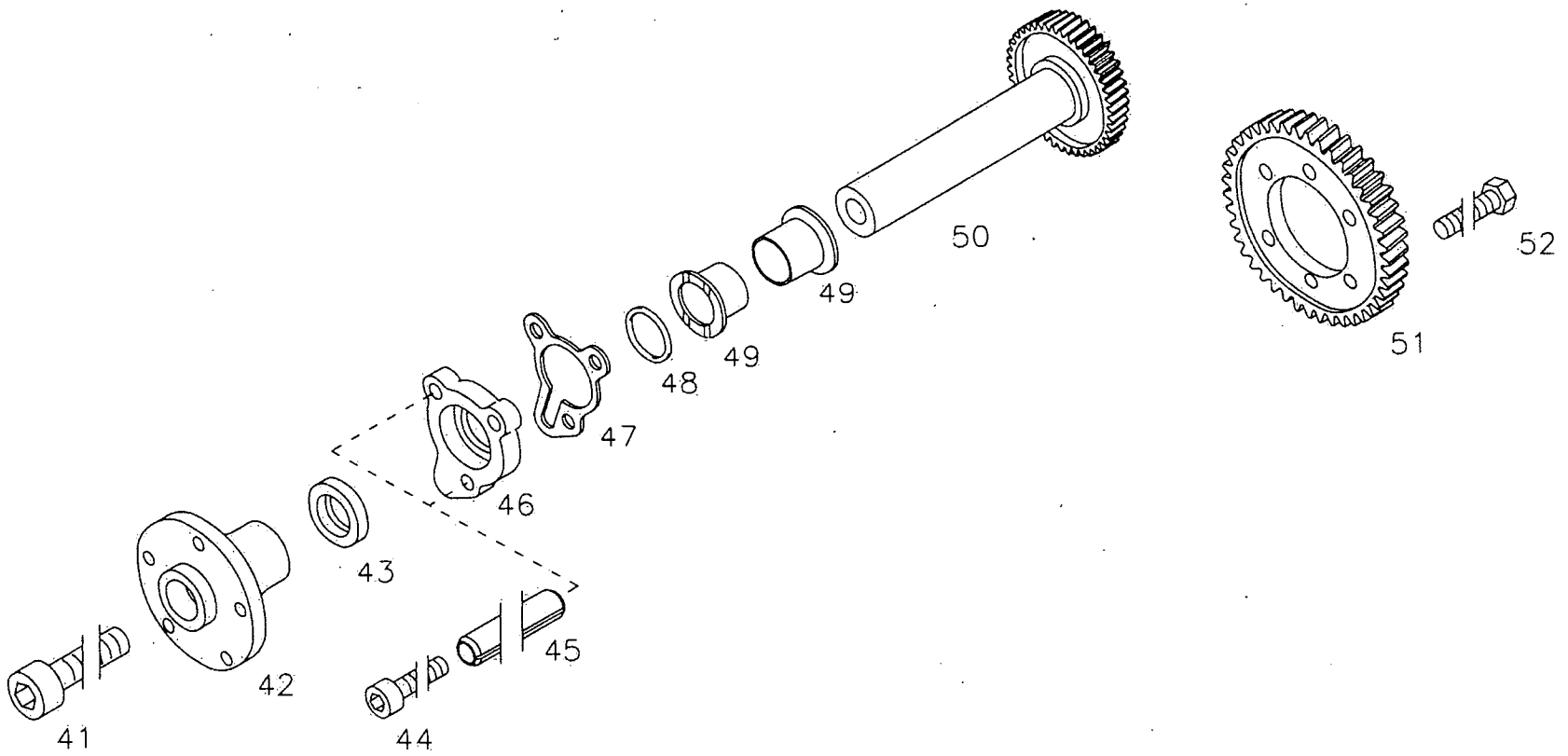

0510 1513 001

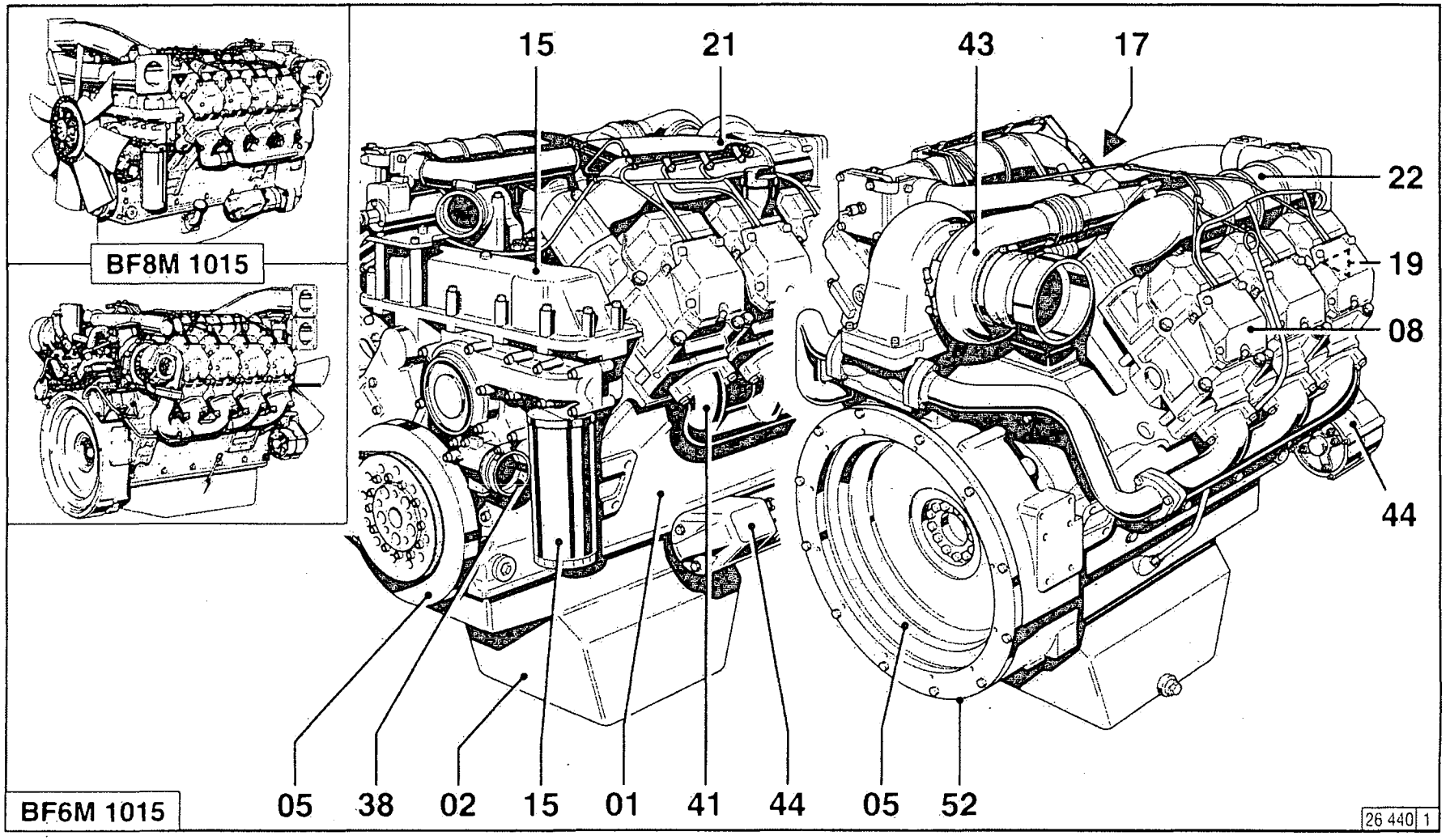
BF8M 1015
BF6M 1015
15
21
43
17
22
19
08
44
05
38
02
15
01
41
44
05
52
26 440 1

41
48

41

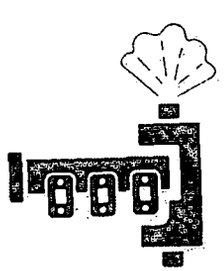

44

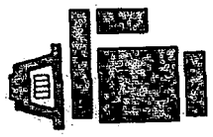

43

46

44

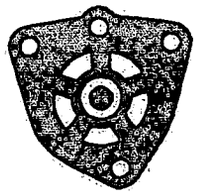

48

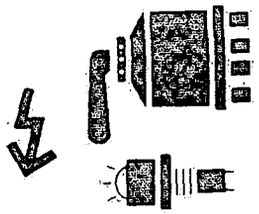

41

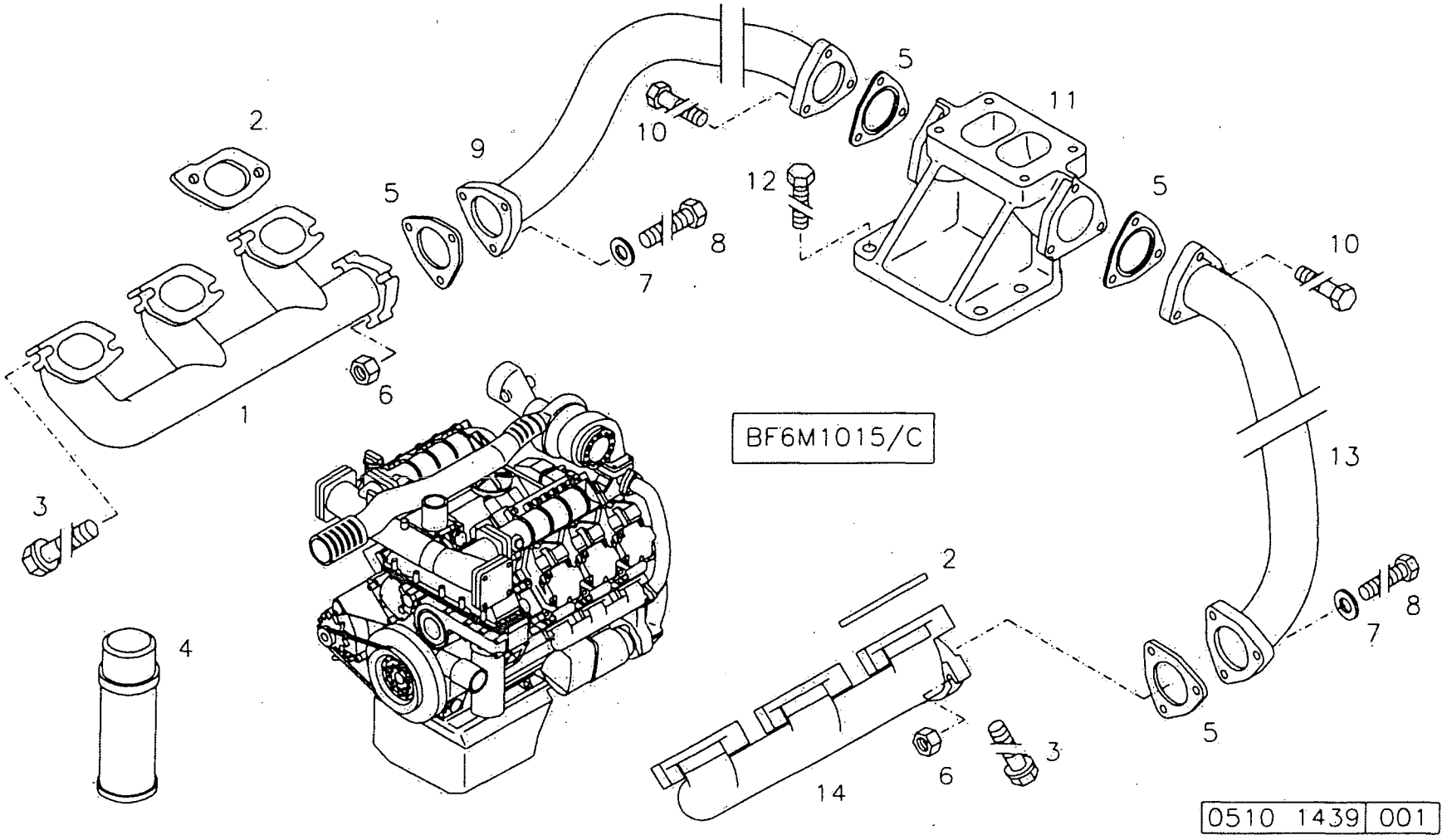

41

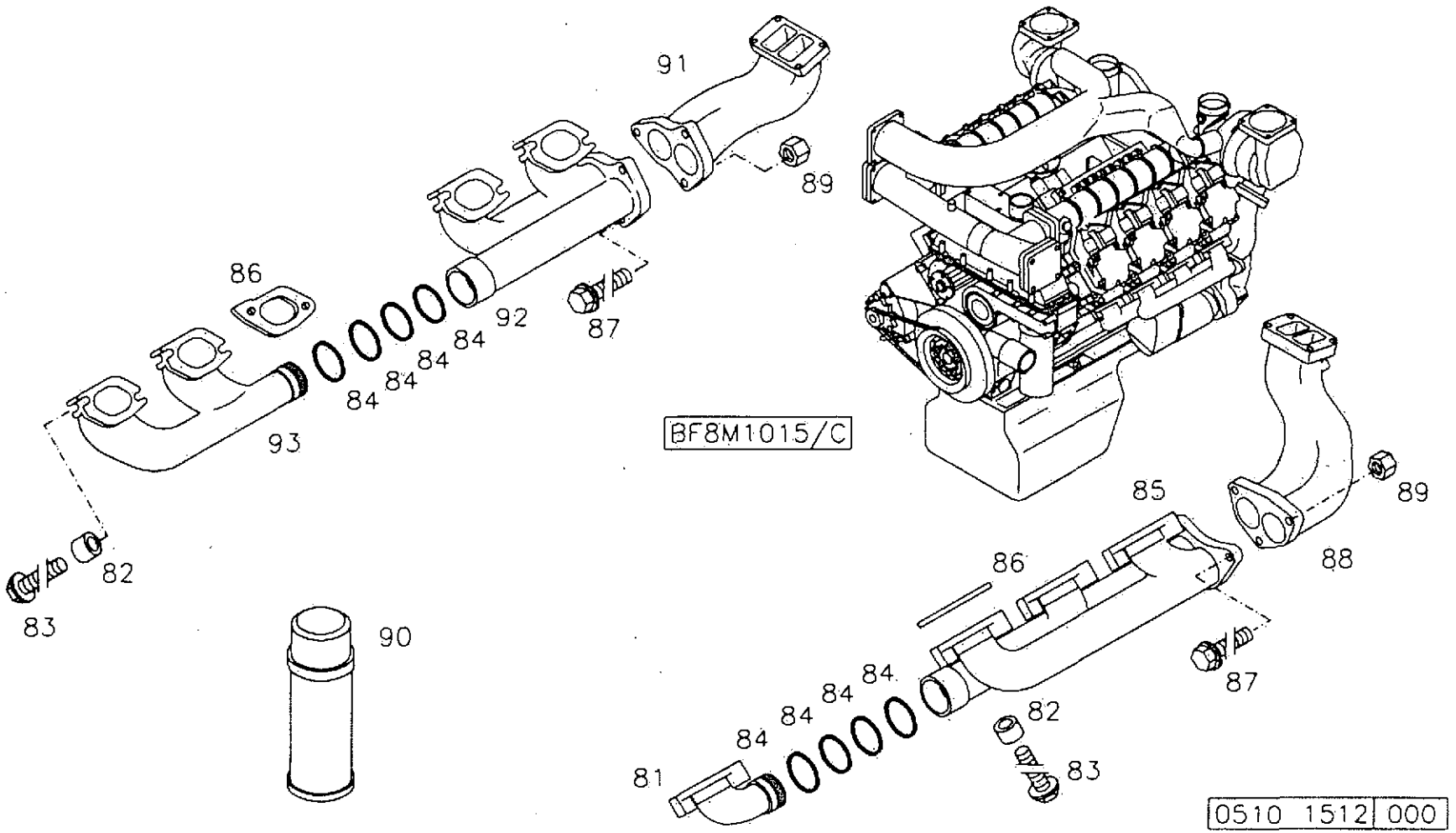
91
89
86
92
87
84
84
84
84
93
BF8M1015/C
85
89
88
86
82
83
90
87
84
84
84
84
82
83
81
0510 1512 000

41

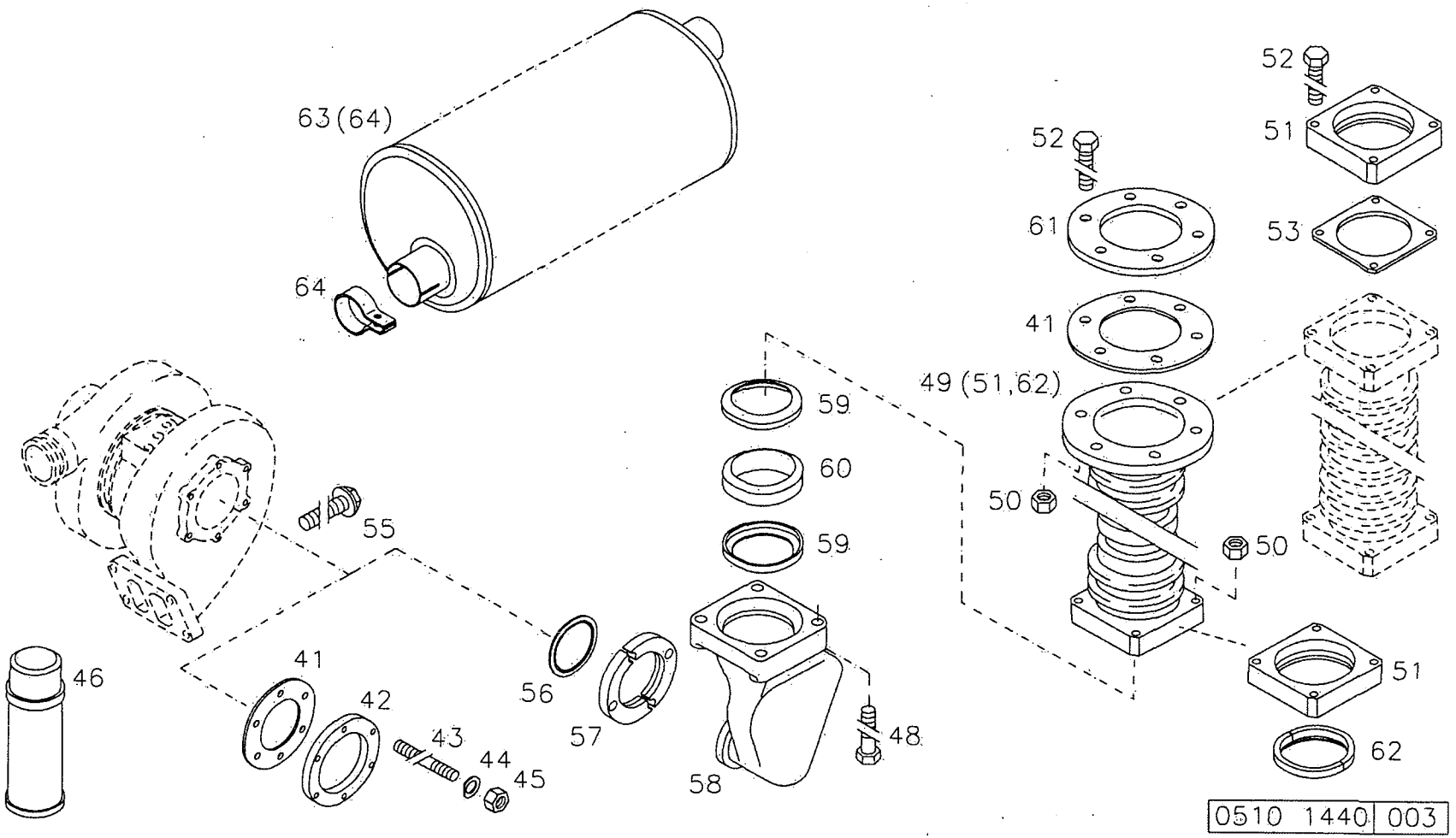
63 (64)
64
52
51
52
61
53
41
49 (51,62)
59
60
59
50
50
55
56
57
58
48
46
41
42
43
44
45
51
62
0510 1440 003

41

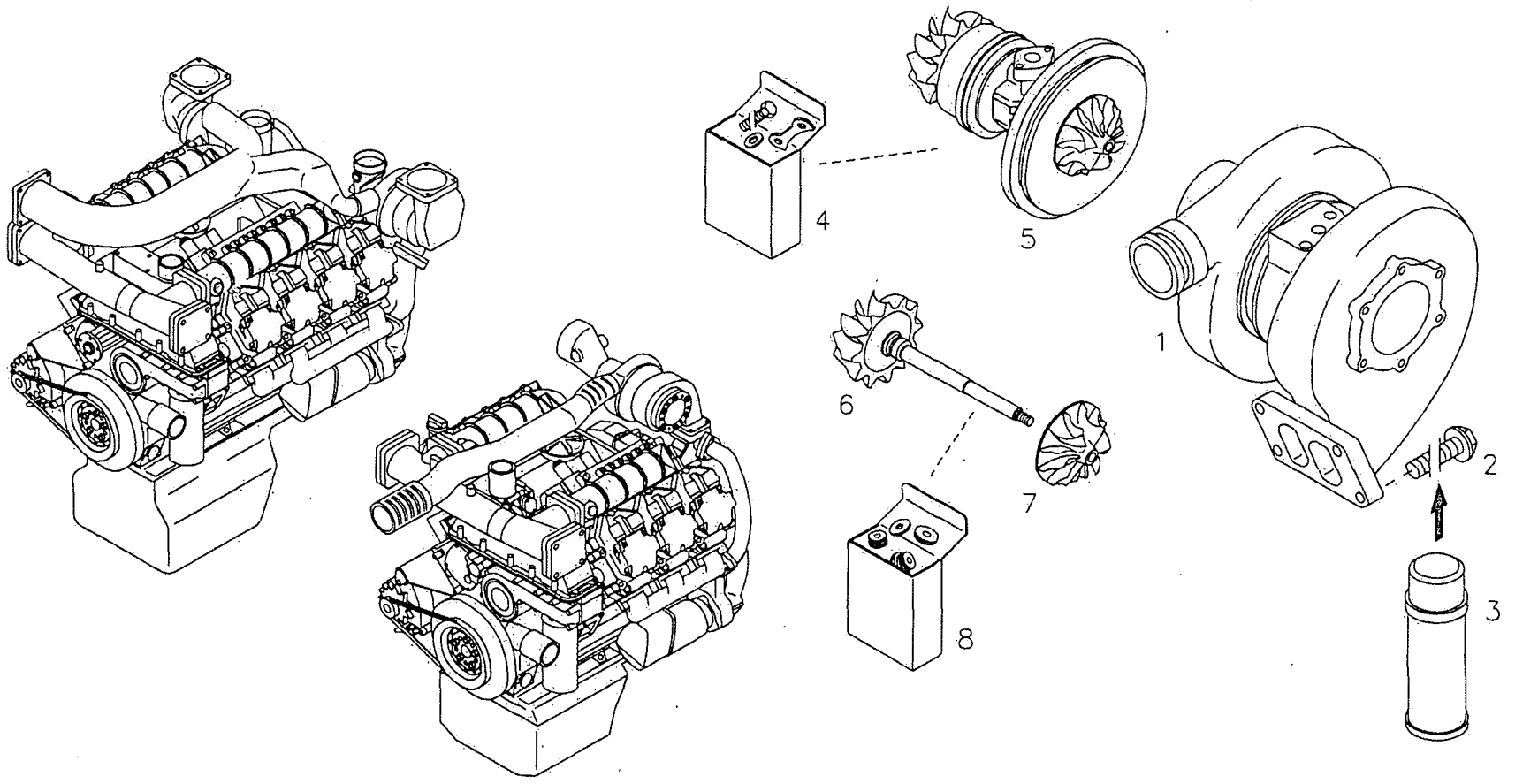

0510 1441 003

44

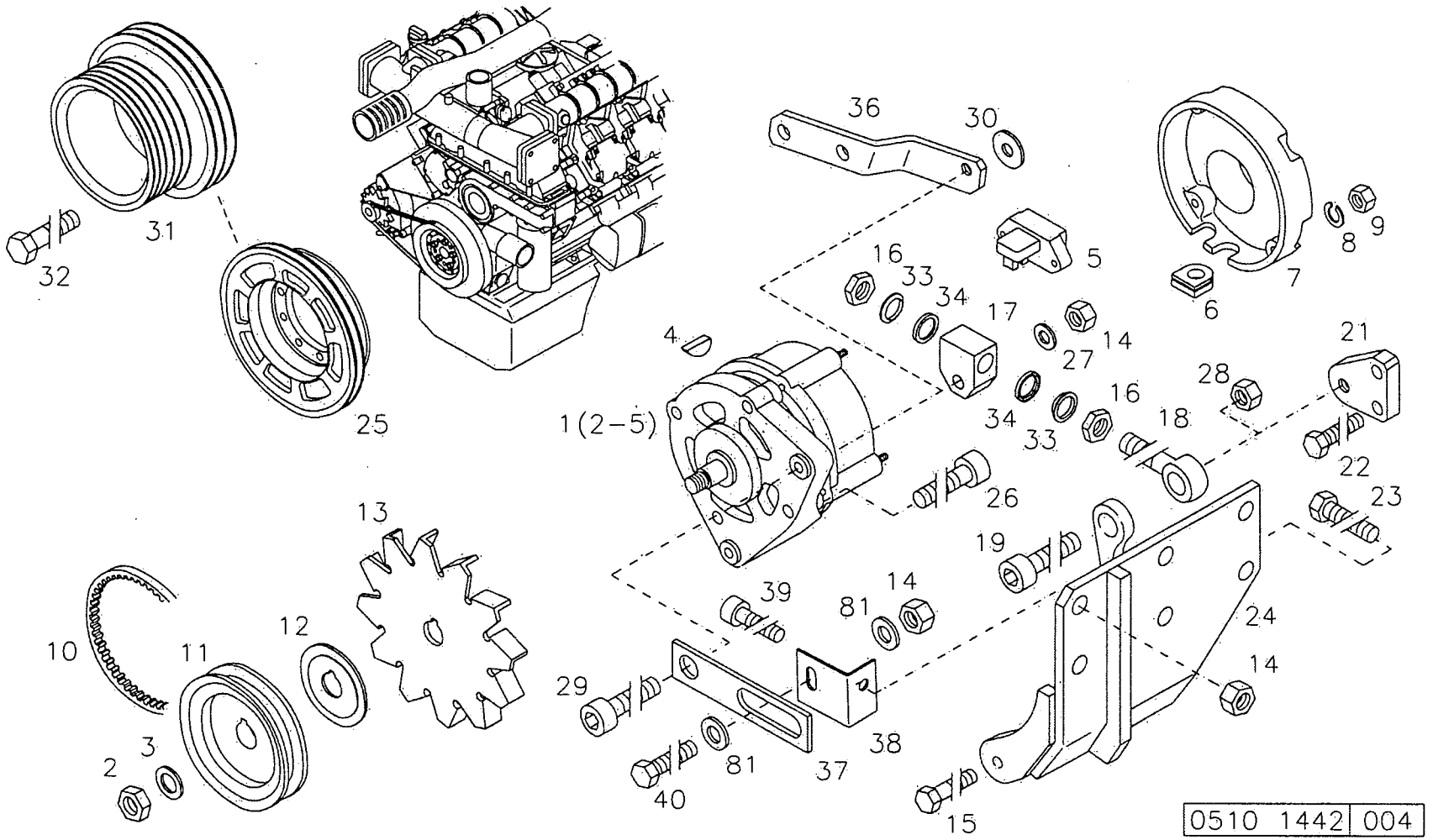
36
30
31
32
25
16
33
34
17
5
14
27
4
1(2-5)
34
33
16
18
28
21
22
23
26
19
13
39
81
14
24
14
10
11
12
29
38
37
81
40
15
2
3
6
7
8
9
0510 1442 004

44

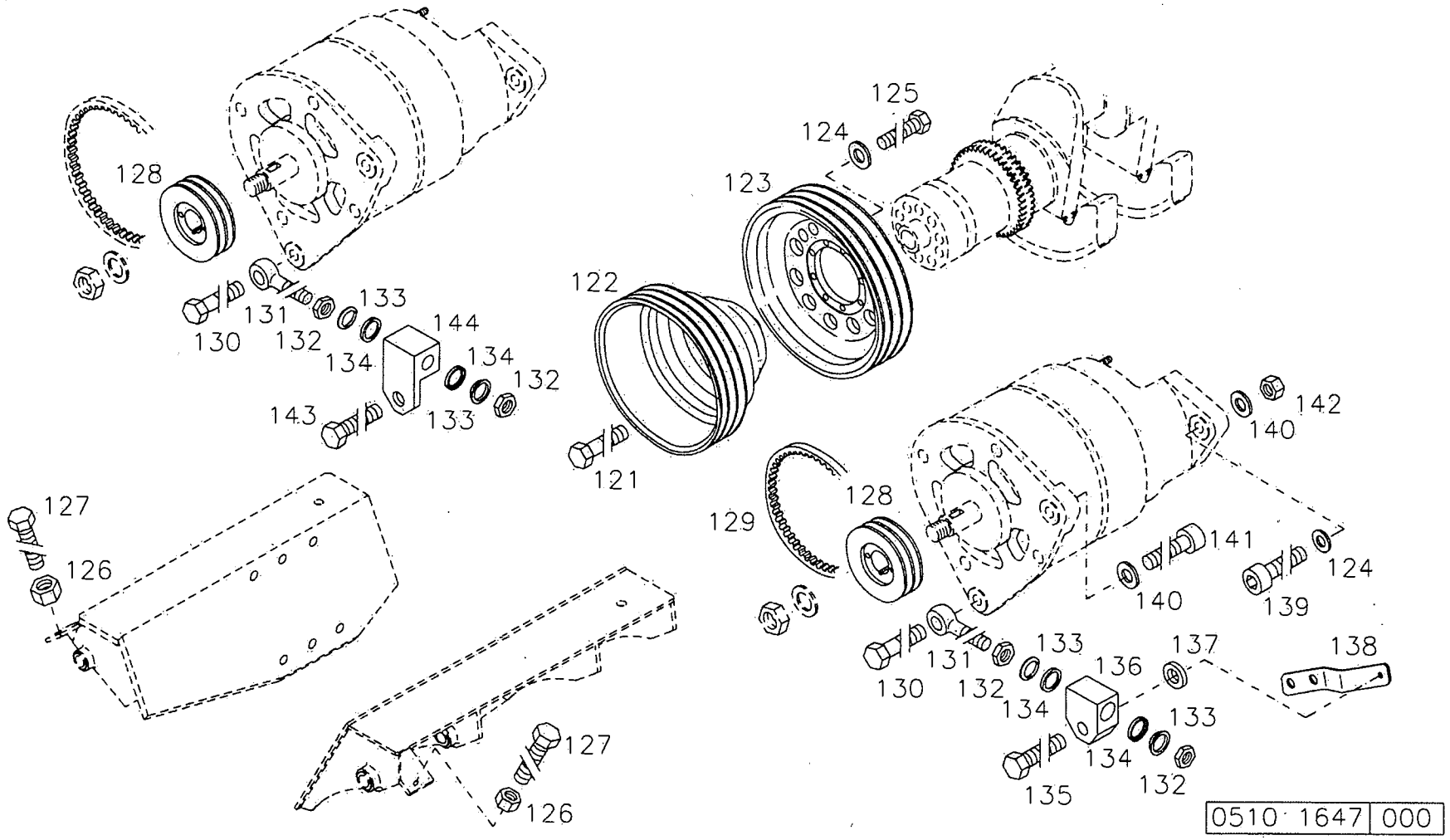
125
124
123
128
122
133
131
130
132
144
134
134
132
143
133
121
142
140
127
126
129
128
141
124
140
139
133
137
138
131
136
130
132
134
133
134
132
135
127
126
0510 1647 000

44

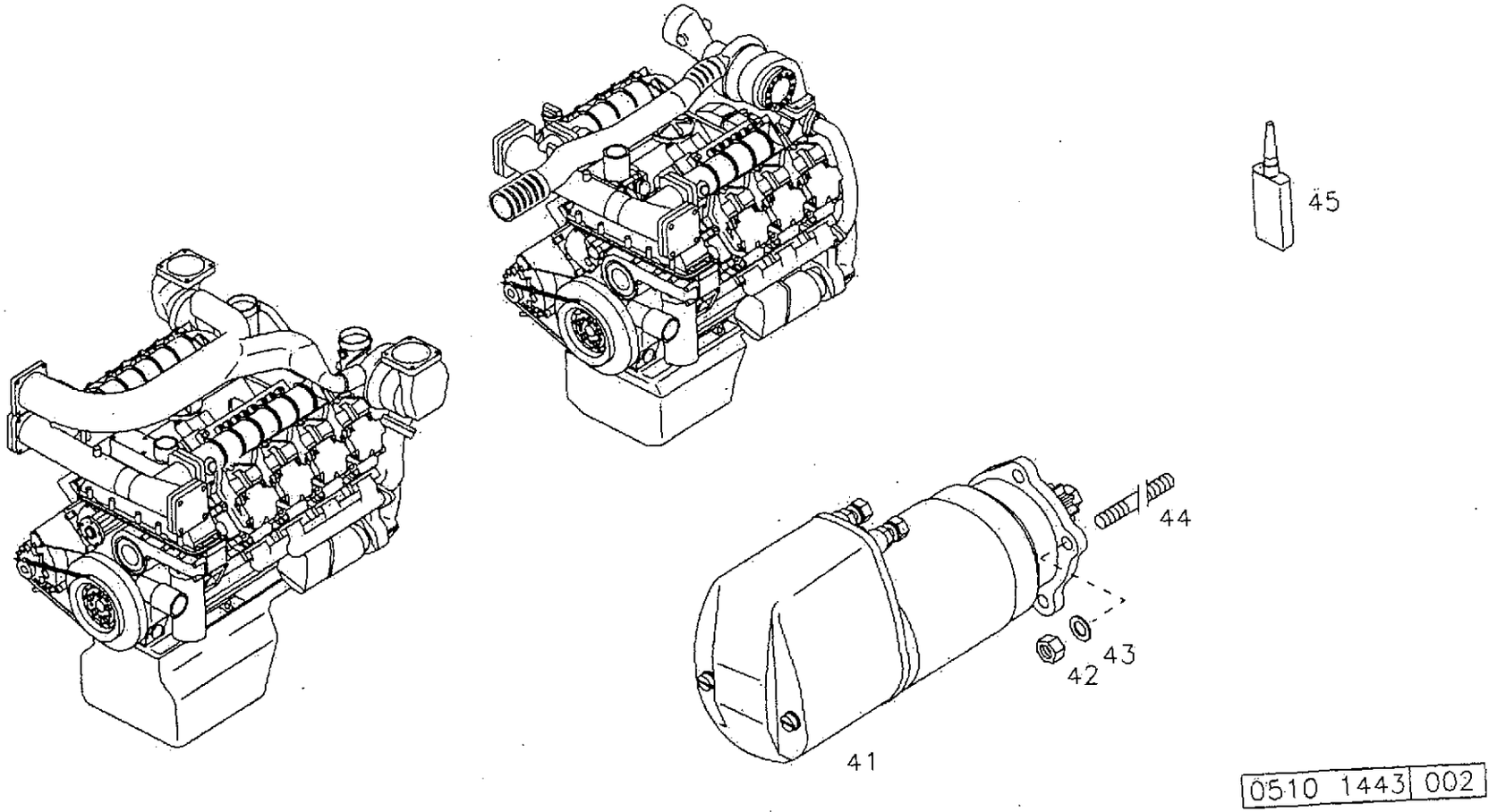

46

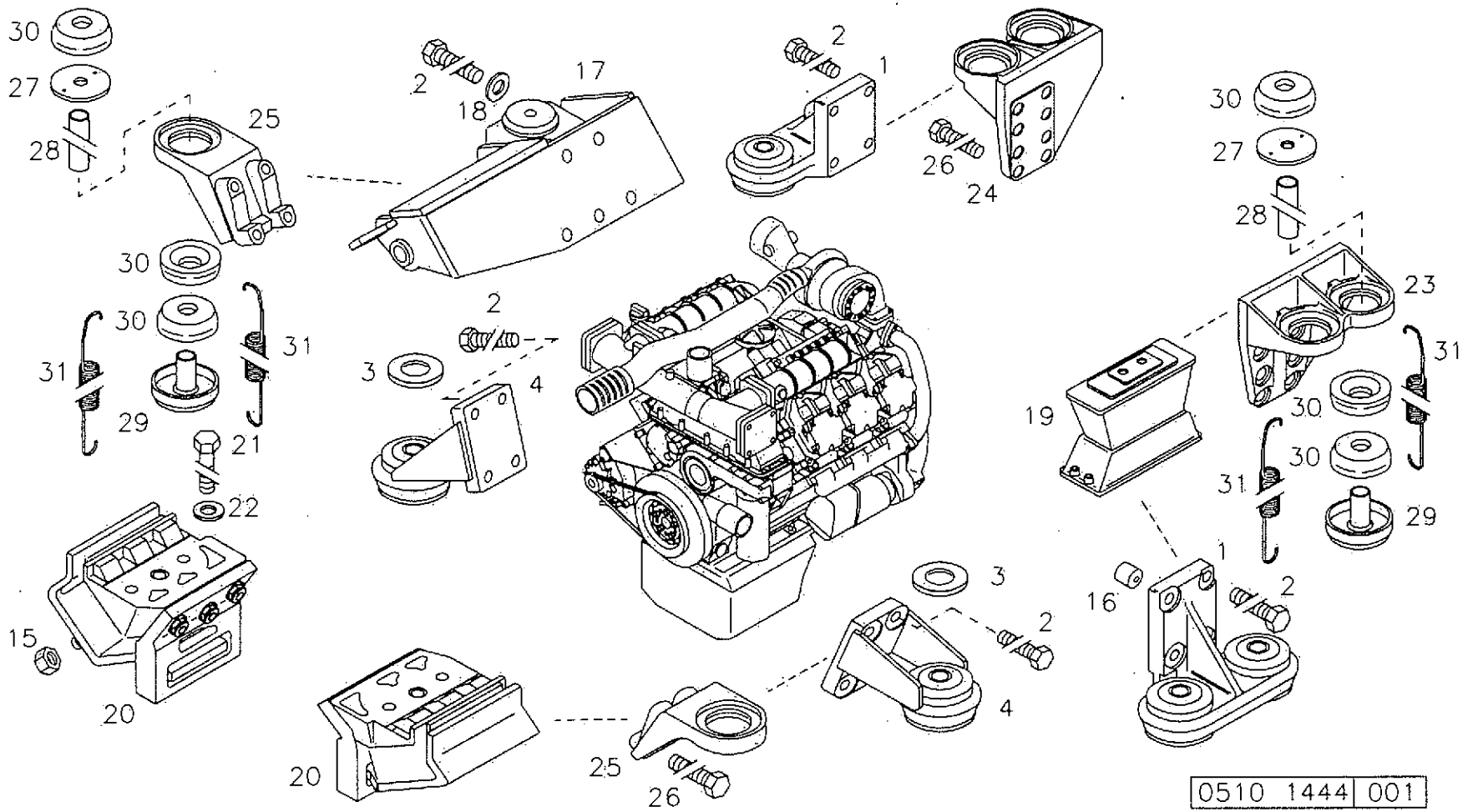
30
27
28
25
30
30
31
31
29
21
22
15
20
2
18
17
2
3
4
20
25
26
2
1
26
24
30
27
28
23
31
19
30
30
31
29
1
16
2
3
2
4
0510 1444 001

46

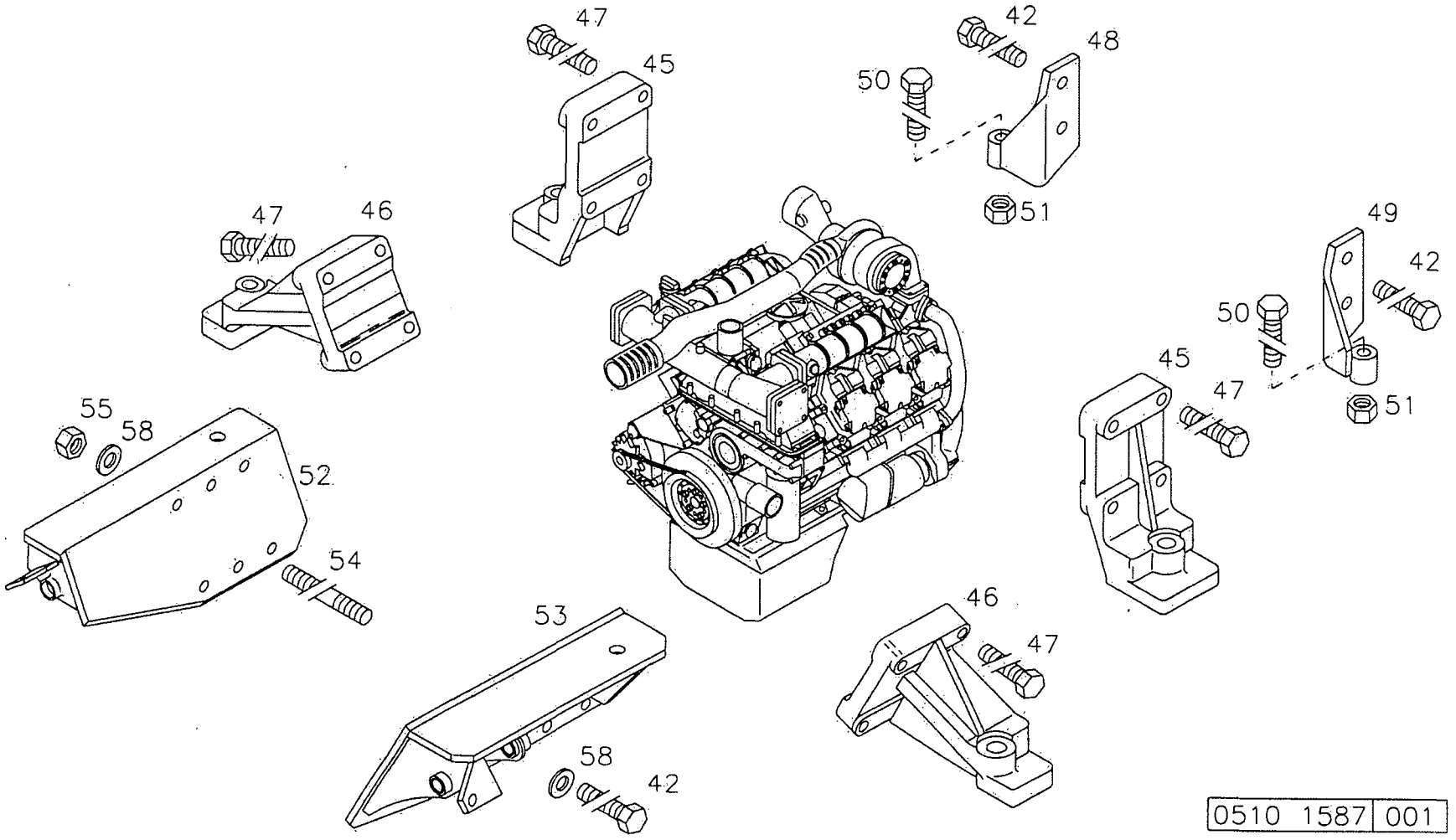
47
45
42
48
50
51
47
46
49
42
50
45
47
51
55
58
52
54
53
58
42
46
47
0510 1587 001

48

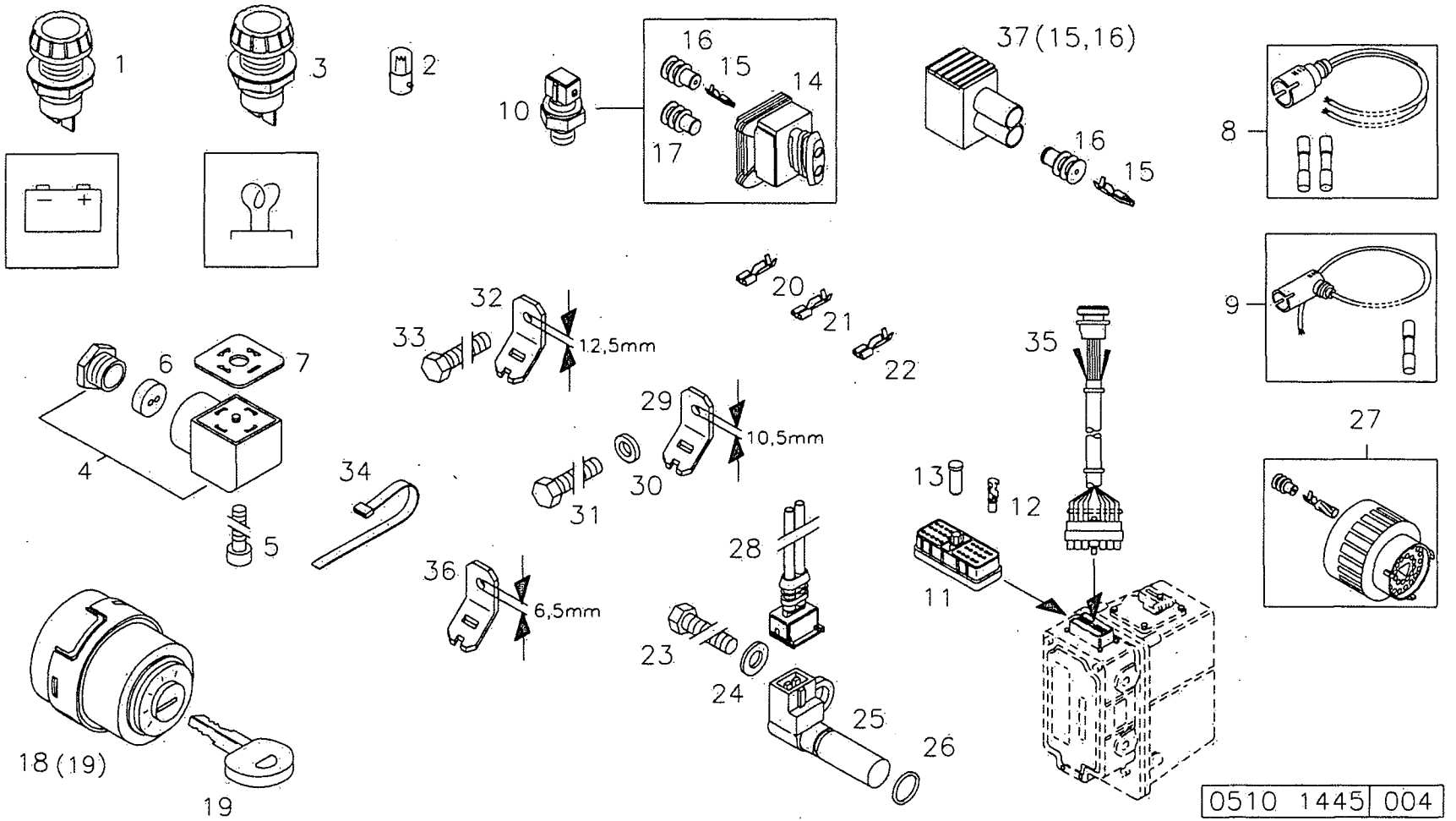
1
3
2
10
16
15
14
17
37(15,16)
16
15
8
9
27
32
33
12,5mm
20
21
22
35
29
10,5mm
30
31
6
7
4
5
34
13
12
11
28
36
6,5mm
23
24
25
26
18(19)
19
0510 1445 004

0510 1446 000

48

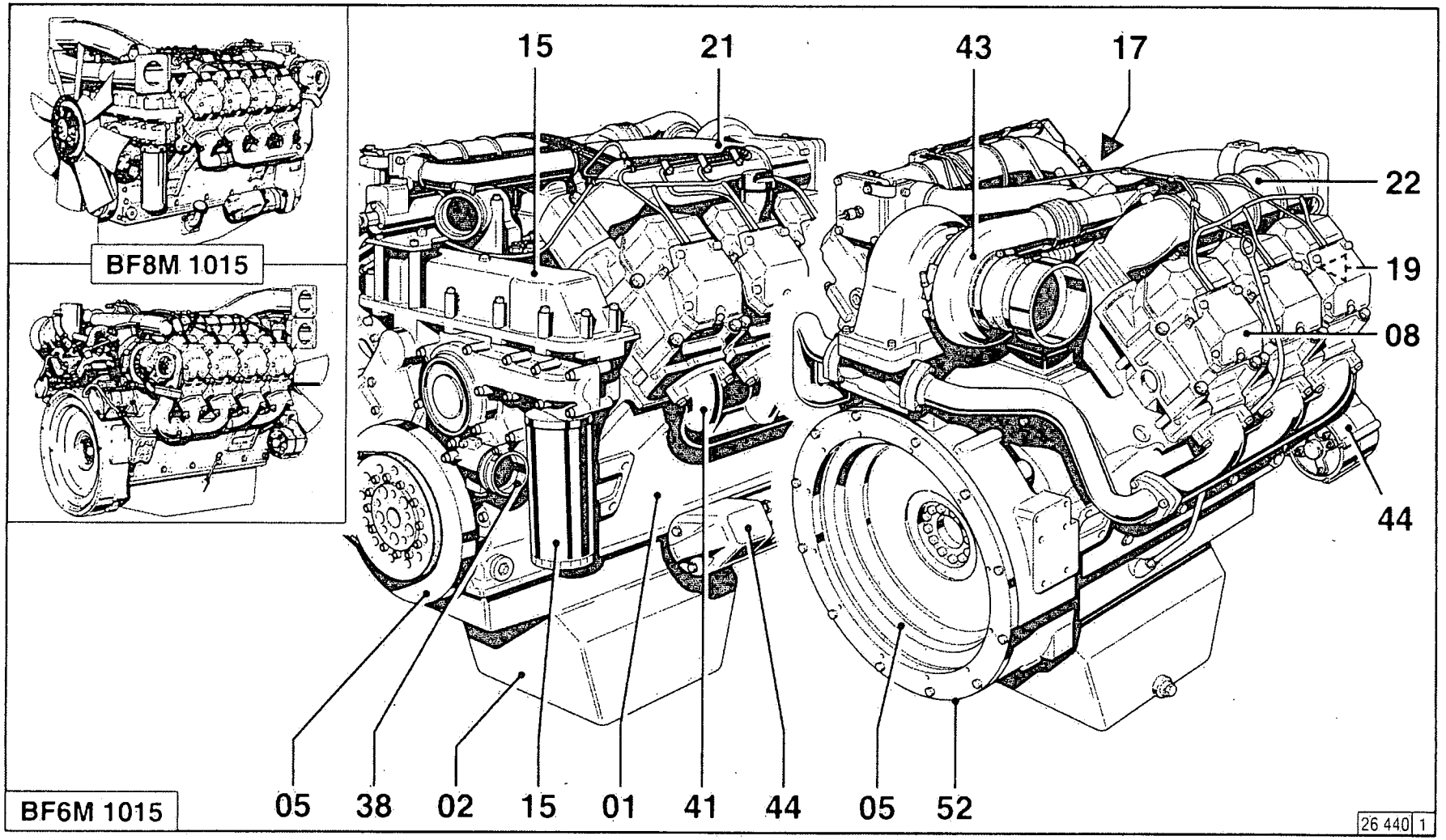
BF8M 1015
BF6M 1015
15
21
43
17
22
19
08
44
05
38
02
15
01
41
44
05
52
26 440 1

56
83
52
75
99
51
90
70
51
99

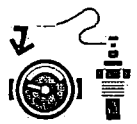

51

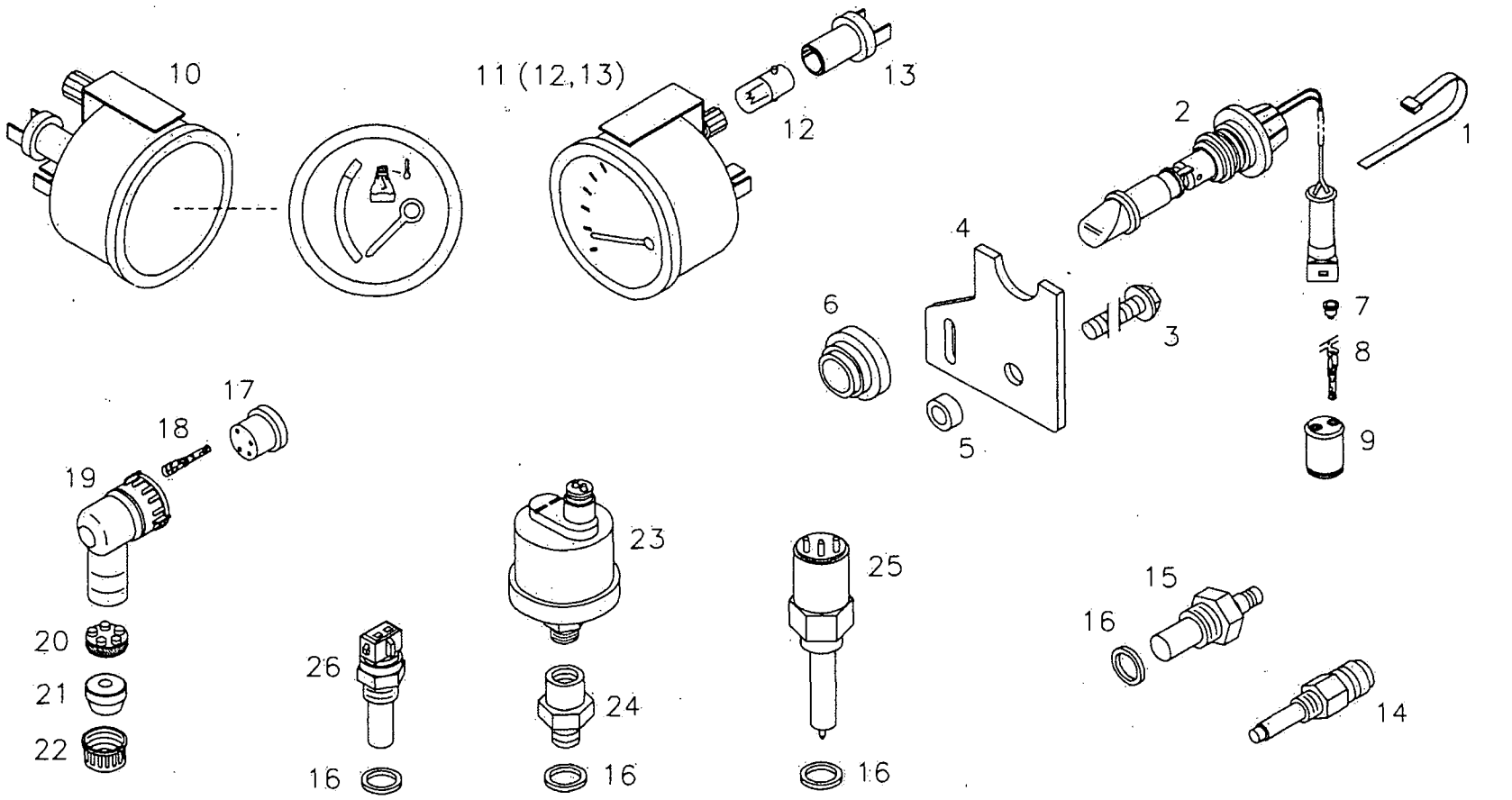

0510 1447 001

52

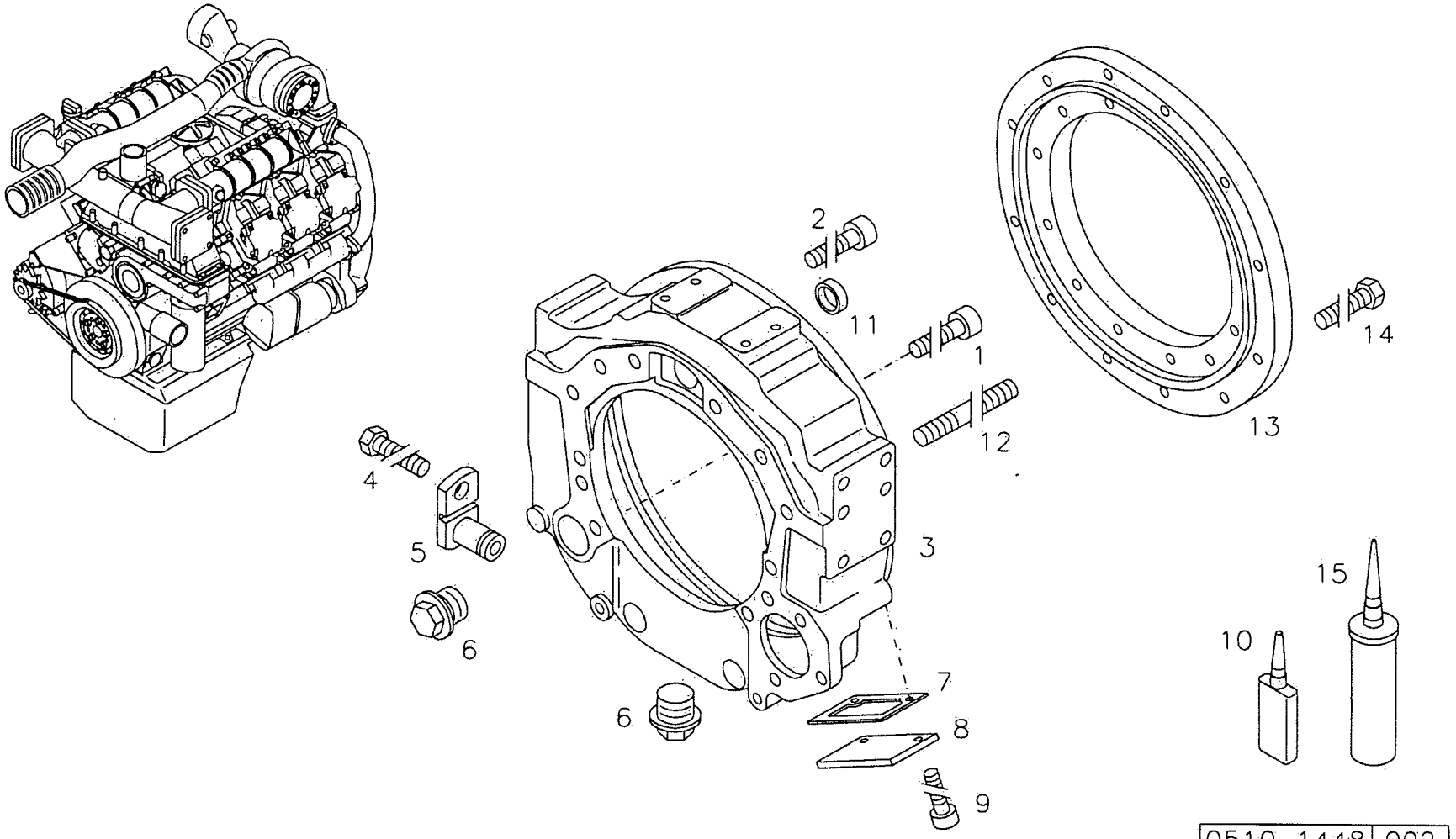

56

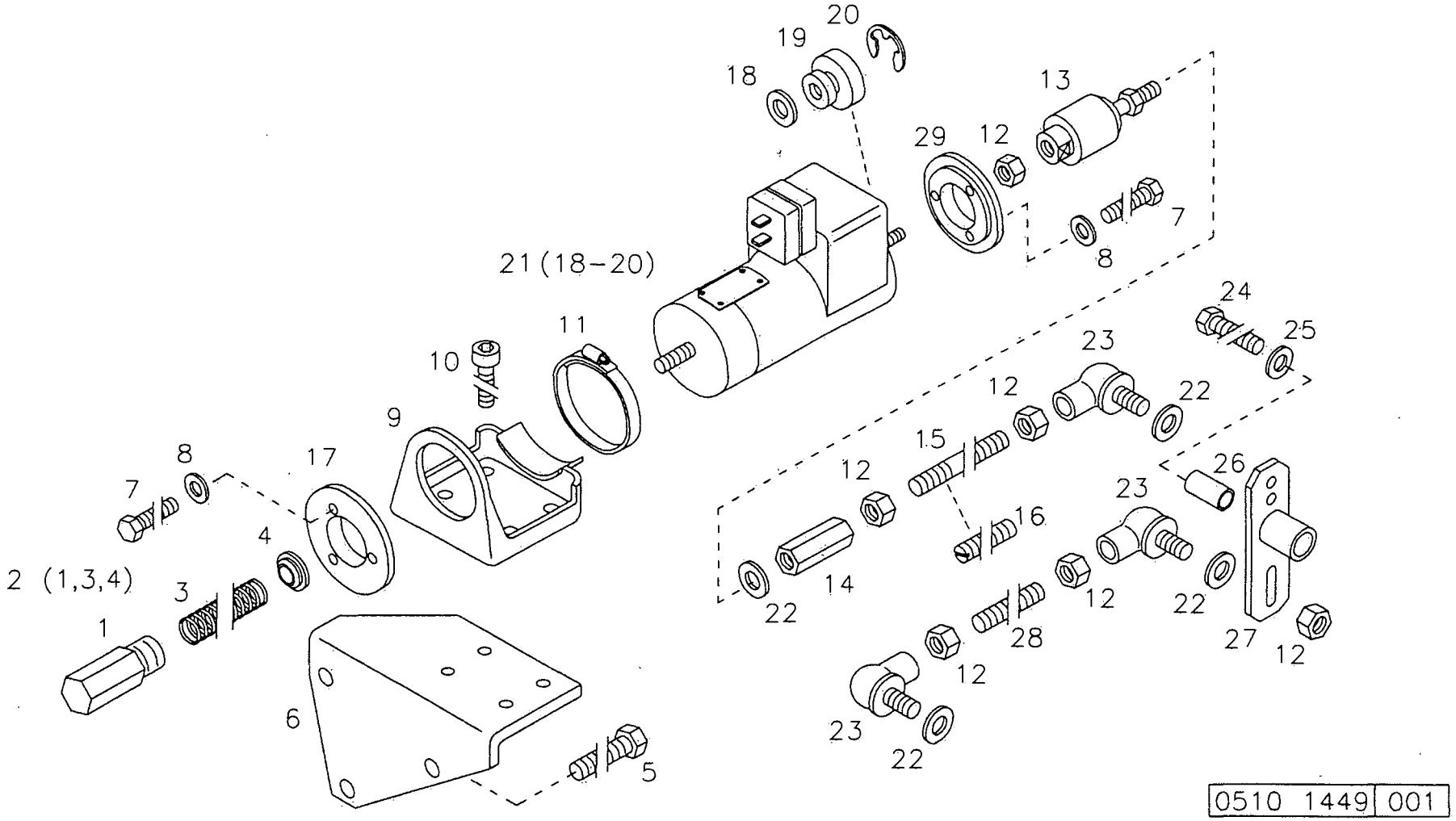
20
19
18
13
29
12
7
8
21 (18–20)
24
25
11
23
10
12
22
9
15
8
17
12
26
7
23
16
4
2 (1,3,4)
3
14
12
22
22
1
28
27
12
12
6
23
22
5
0510 1449 001

56

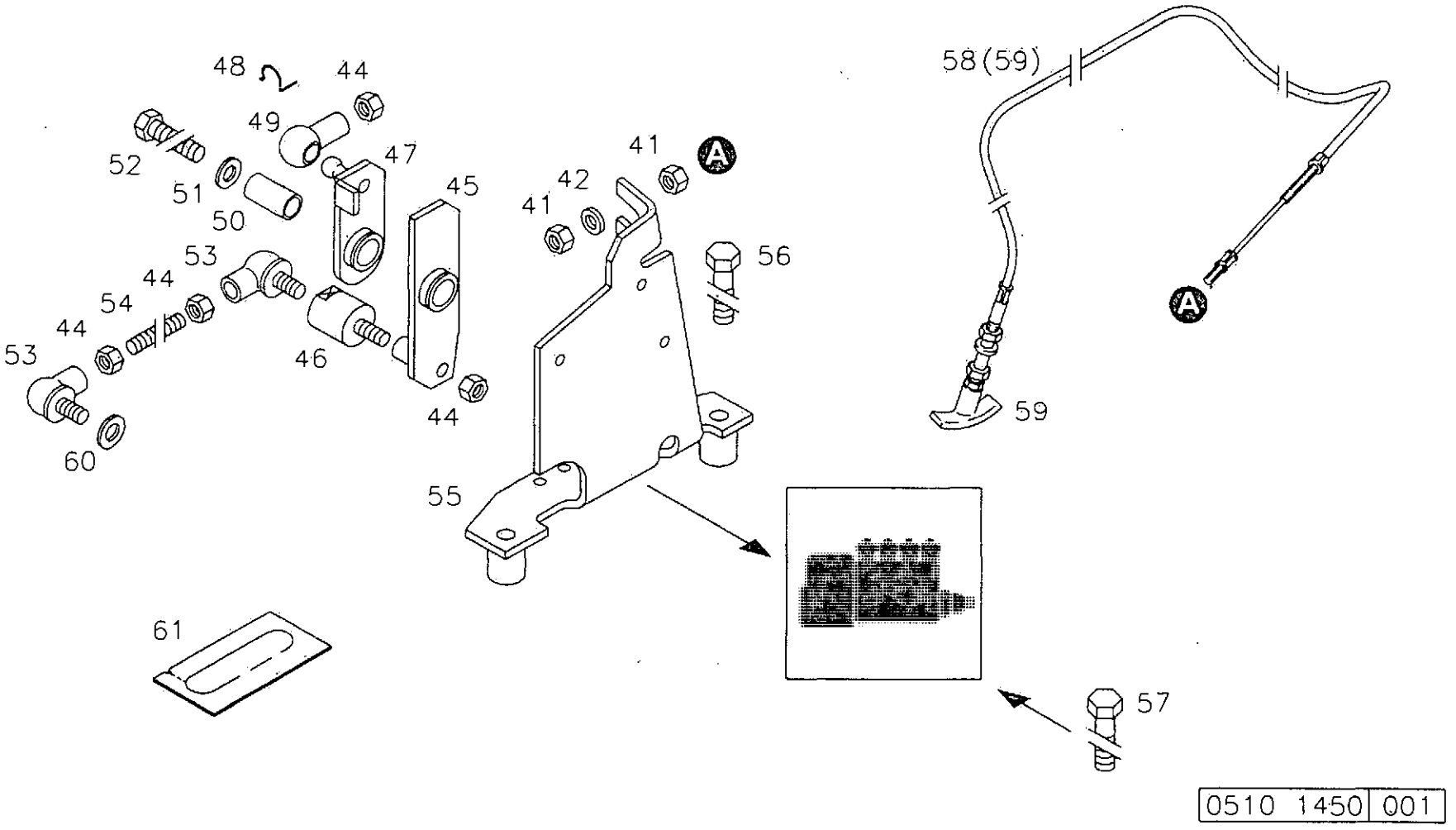

0510 1450 | 001

56

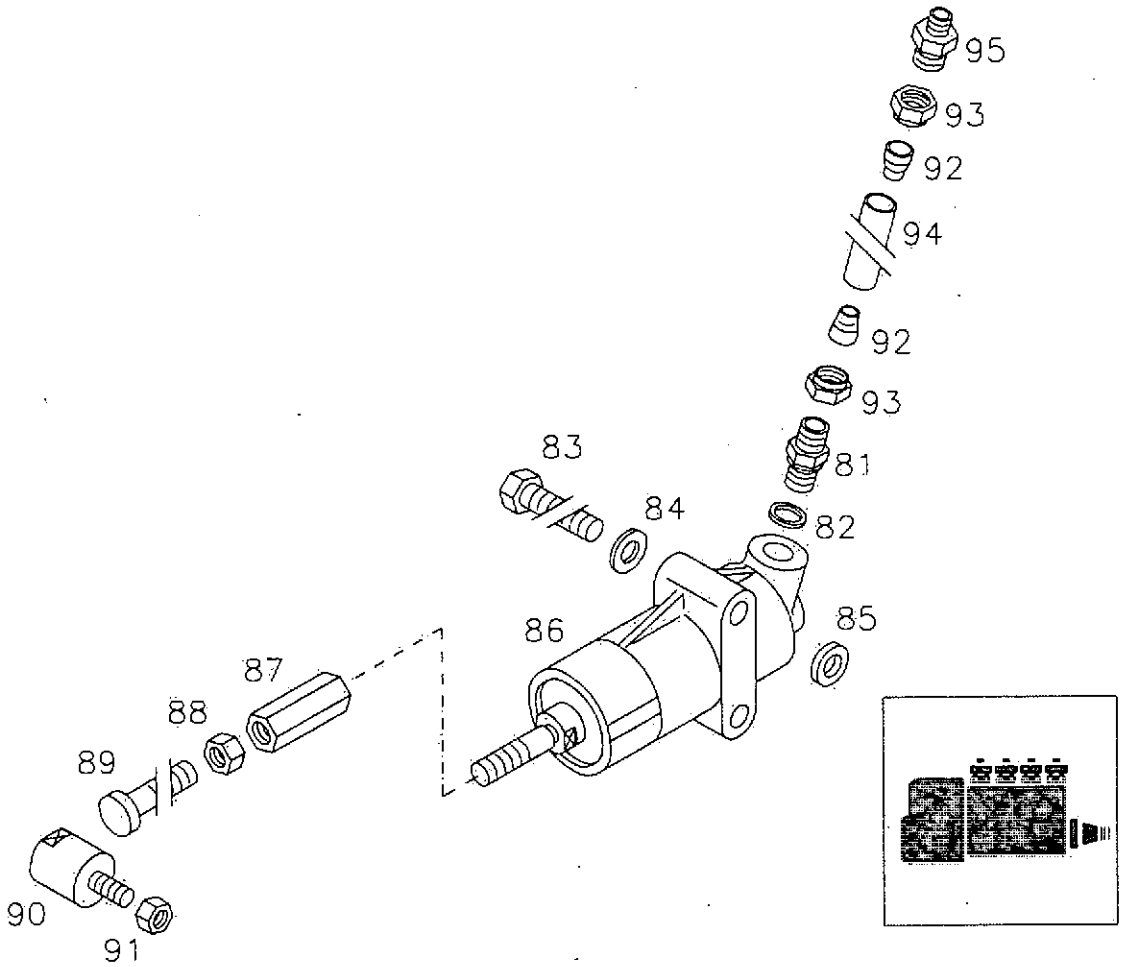

0510 1460 001

70

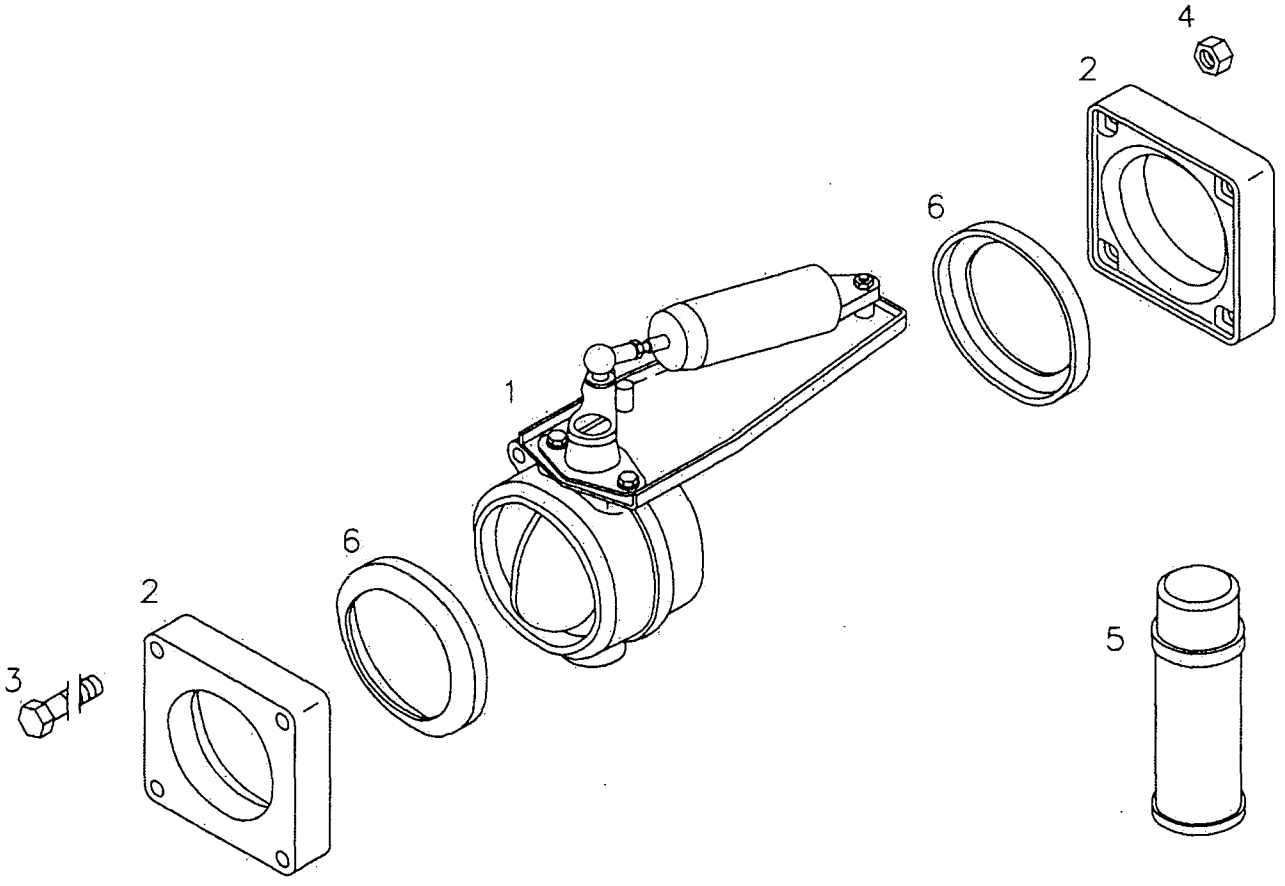

0510 1452 001

75

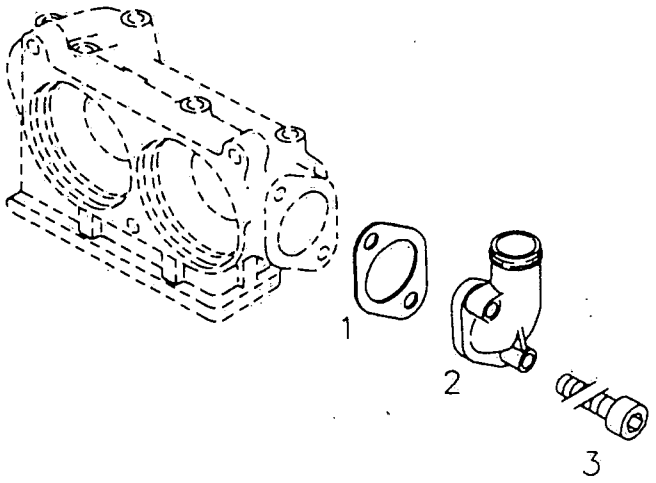

0510 1453 000

83

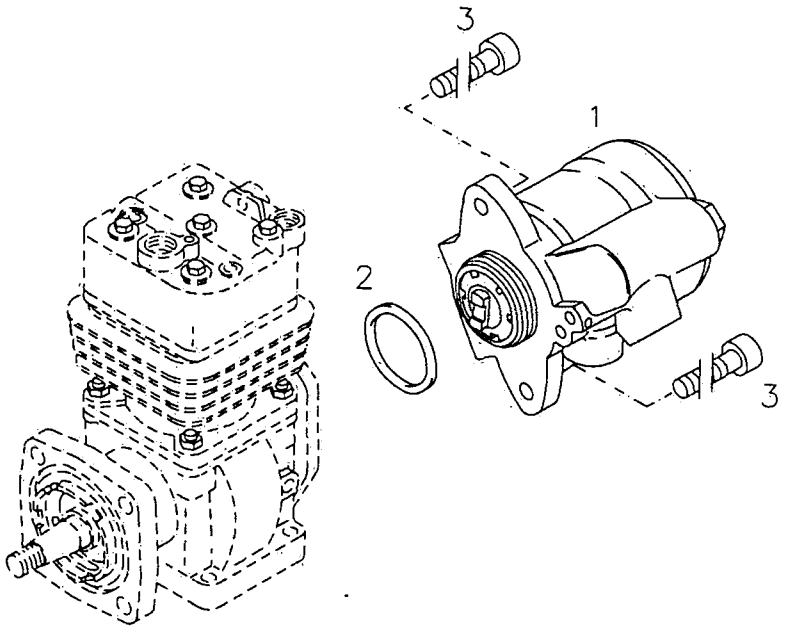

0510 1454 002

83

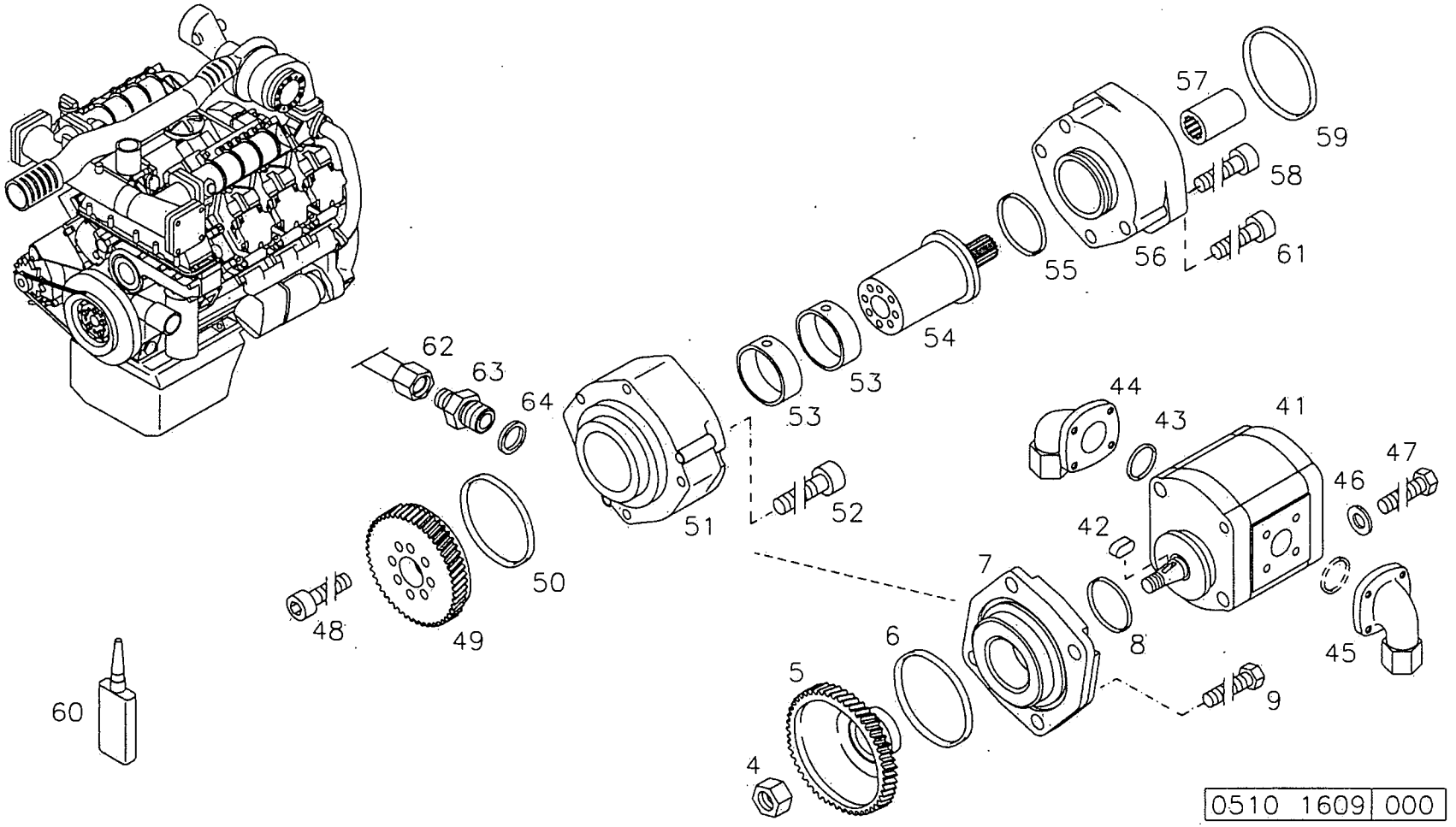
57
59
58
61
56
55
54
53
53
62
63
64
51
52
44
43
41
47
46
42
7
8
45
6
5
9
4
50
48
49
60
0510 1609 000

1

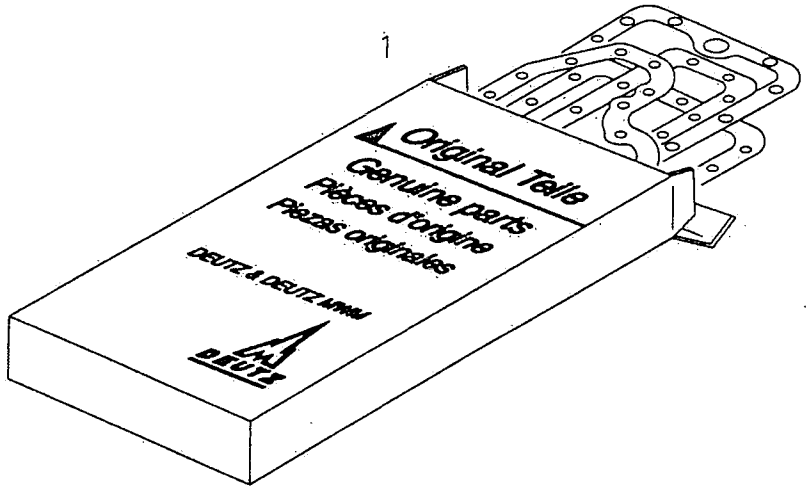

2

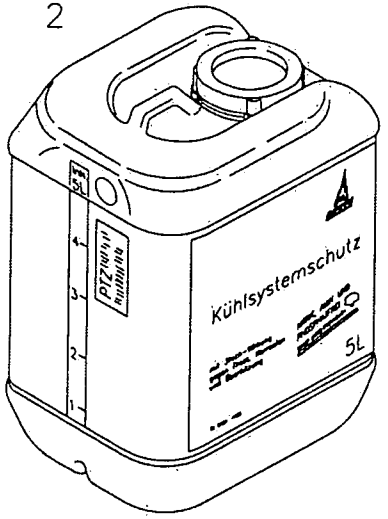

0510 1459 002

99

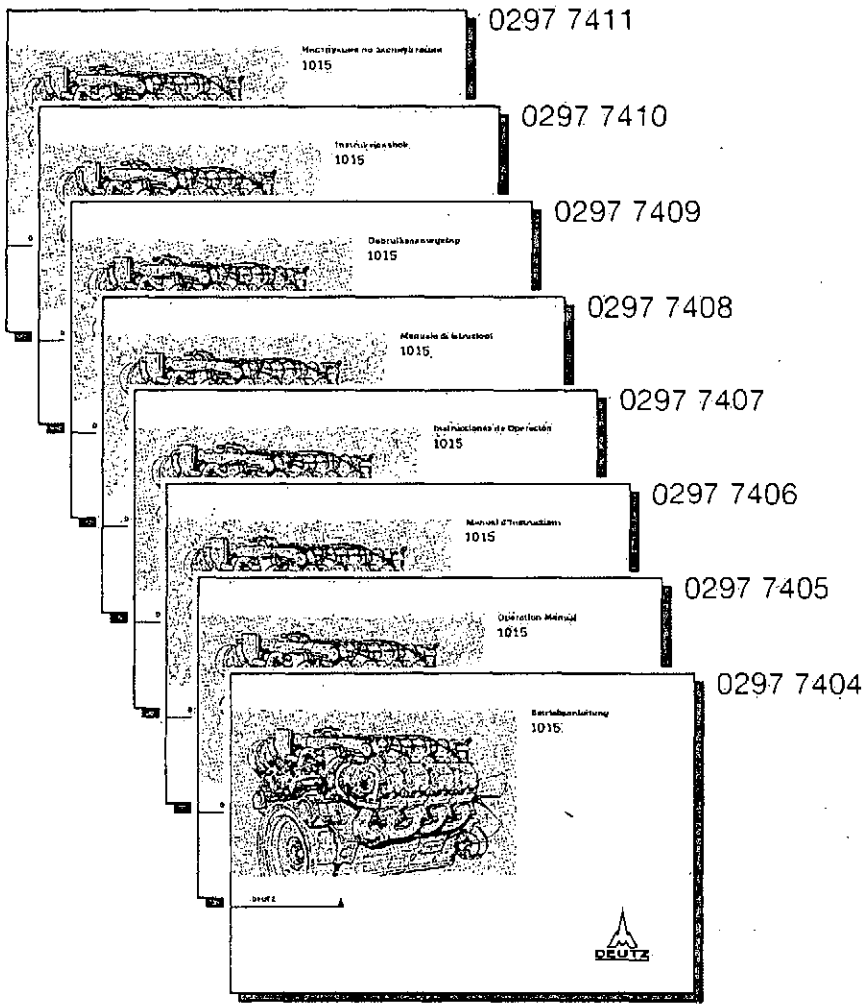

0297 7411

0297 7410

0297 7409

0297 7408

0297 7407

0297 7406

0297 7405

0297 7404

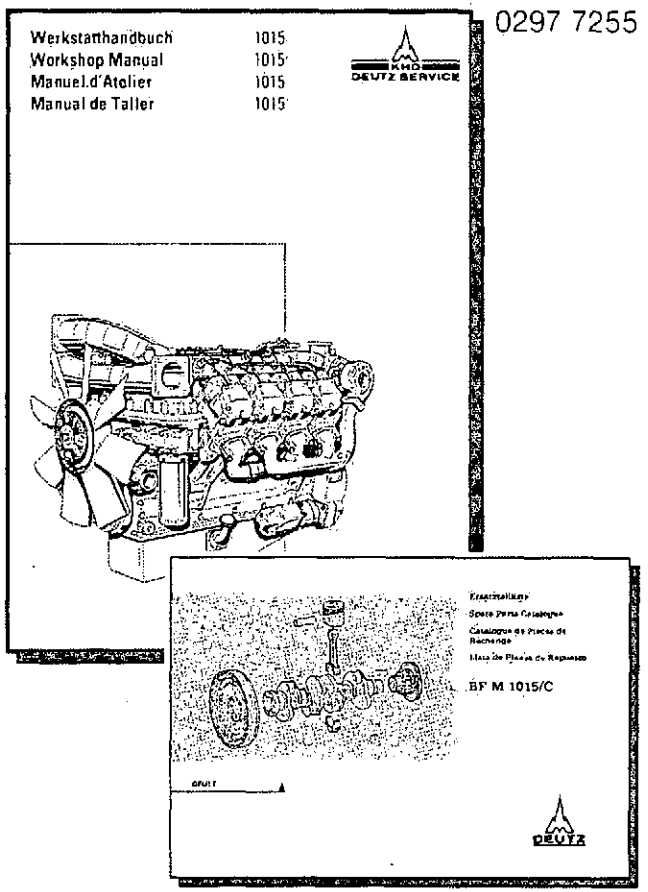

0297 7255

0297 7772

0510 1455 5

Publication No: 2H-056
22nd Edition
02/01

STAMFORD

AC GENERATORS FROM
NEWAGE INTERNATIONAL

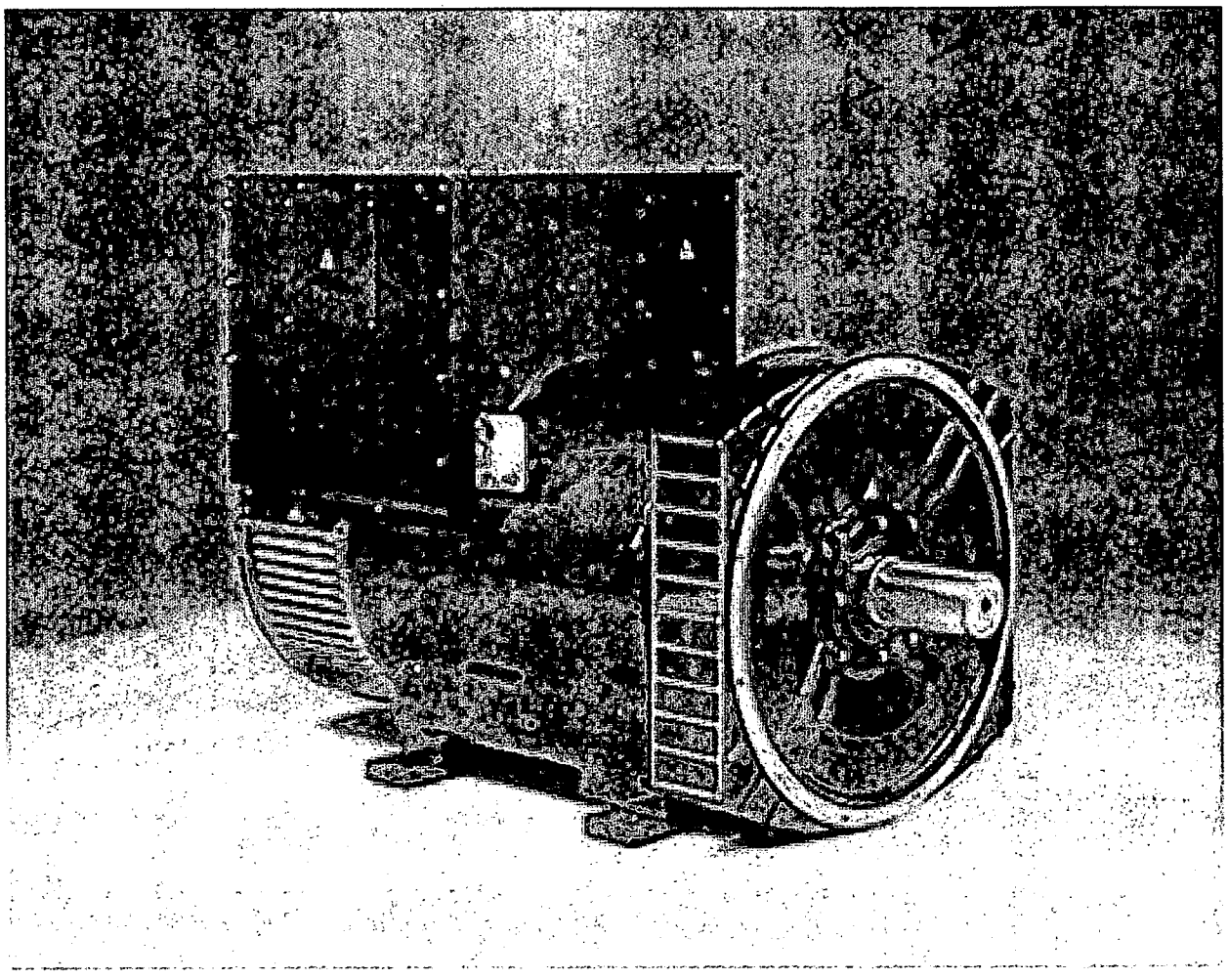

Installation, Service & Maintenance Manual

for AC generators with the following prefixes:

HCI; HCM; HCK 4,5,6,7.

SAFETY PRECAUTIONS

Before operating the generating set, read the generating set operation manual and this generator manual and become familiar with it and the equipment.

SAFE AND EFFICIENT OPERATION CAN ONLY BE ACHIEVED IF THE EQUIPMENT IS CORRECTLY OPERATED AND MAINTAINED.

Many accidents occur because of failure to follow fundamental rules and precautions.

ELECTRICAL SHOCK CAN CAUSE SEVERE PERSONAL INJURY OR DEATH.

Observe all **WARNING/CAUTION** notices.

- Ensure installation meets all applicable safety and local electrical codes. Have all installations performed by a qualified electrician.
- Do not operate the generator with protective covers, access covers or terminal box covers removed.
- Disable engine starting circuits before carrying out maintenance.
- Disable closing circuits and/or place warning notices on any circuit breakers normally used for connection to the mains or other generators, to avoid accidental closure.

Observe all **IMPORTANT, CAUTION, WARNING, and DANGER** notices, defined as:

Important ! **Important refers to hazard or unsafe method or practice which can result in product damage or related equipment damage.**

Caution ! **Caution refers to hazard or unsafe method or practice which can result in product damage or personal injury.**

Warning ! **Warning refers to a hazard or unsafe method or practice which CAN result in severe personal injury or possible death.**

Danger ! **Danger refers to immediate hazards which WILL result in severe personal injury or death.**

Due to our policy of continuous improvement, details in this manual which were correct at time of printing, may now be due for amendment. Information included must therefore not be regarded as binding.

Front Cover Photograph
This photograph is representative only. Several variations are available within the range of generators covered by this manual.

FOREWORD

The function of this book is to provide the user of the Stamford generator with an understanding of the principles of operation, the criteria for which the generator has been designed, and the installation and maintenance procedures. Specific areas where the lack of care or use of incorrect procedures could lead to equipment damage and/or personal injury are highlighted, with **WARNING** and/or **CAUTION** notes, and it is important that the contents of this book are read and understood before proceeding to fit or use the generator.

The Service, Sales and technical staff of Newage International are always ready to assist and reference to the company for advice is welcomed.

Warning !

Incorrect installation, operation, servicing or replacement of parts can result in severe personal injury or death, and/or equipment damage.
Service personnel must be qualified to perform electrical and mechanical service.

EC DECLARATION OF INCORPORATION

All Stamford generators are supplied with a declaration of incorporation for the relevant EC legislation, typically in the form of a label as below.

EC DECLARATION OF INCORPORATION

IN ACCORDANCE WITH THE SUPPLY OF MACHINERY (SAFETY) REGULATIONS 1992 AND THE SUPPLY OF MACHINERY (SAFETY) (AMENDMENT) REGULATIONS 1994 IMPLEMENTING THE EC MACHINERY DIRECTIVE 89/392/EEC AS AMENDED BY 91/368/EEC.

THIS STAMFORD A.C. GENERATOR WAS MANUFACTURED BY OR ON BEHALF OF NEWAGE INTERNATIONAL LTD BARNACK ROAD STAMFORD LINCOLNSHIRE ENGLAND.

THIS COMPONENT MACHINERY MUST NOT BE PUT INTO SERVICE UNTIL THE MACHINERY INTO WHICH IT IS TO BE INCORPORATED HAS BEEN DECLARED IN CONFORMITY WITH THE PROVISIONS OF THE SUPPLY OF MACHINERY (SAFETY) REGULATIONS 1995/MACHINERY DIRECTIVE.

FOR AND ON BEHALF OF NEWAGE INTERNATIONAL LIMITED

NAME: LAWRENCE HAYDOCK
POSITION: TECHNICAL DIRECTOR
SIGNATURE:

THIS COMPONENT MACHINERY CARRIES THE CE MARK FOR COMPLIANCE WITH THE STATUTORY REQUIREMENTS FOR THE IMPLEMENTATION OF THE FOLLOWING DIRECTIVES

The EMC Directive 89/336/EEC
WARNING! This Component Machinery shall not be used in the Residential, Commercial and Light Industrial environment unless it also conforms to the relevant standard (EN 50081 - 1) REFER TO FACTORY FOR DETAILS

ii) The Low Voltage Directive 73/23/EEC as amended by 93/68/EEC

CE

ELECTROMAGNETIC COMPATIBILITY

Additional Information

European Union
Council Directive 89/336/EEC

For installations within the European Union, electrical products must meet the requirements of the above directive, and Newage ac generators are supplied on the basis that:

- They are to be used for power-generation or related function.
- They are to be applied in one of the following environments:

  Portable (open construction - temporary site supply)
  Portable (enclosed - temporary site supply)
  Containerised (temporary or permanent site supply)
  Ship-borne below decks (marine auxiliary power)
  Commercial vehicle (road transport / refrigeration etc)
  Rail transport (auxiliary power)
  Industrial vehicle (earthmoving, cranes etc)
  Fixed installation (industrial - factory / process plant)
  Fixed installation (residential, commercial and light industrial - home / office / health)
  Energy management (Combined heat and power and/or peak lopping)
  Alternative energy schemes

- The standard generators are designed to meet the 'industrial' emissions and immunity standards. Where the generator is required to meet the residential, commercial and light industrial emissions and immunity standards reference should be made to Newage document reference N4/X/011, as additional equipment may be required.
- The installation earthing scheme involves connection of the generator frame to the site protective earth conductor using a minimum practical lead length.
- Maintenance and servicing with anything other than factory supplied or authorised parts will invalidate any Newage liability for EMC compliance.
- Installation, maintenance and servicing is carried out by adequately trained personnel fully aware of the requirements of the relevant EC directives

CONTENTS

SAFETY PRECAUTIONS			**IFC**
FOREWORD			**1**
CONTENTS			**2&3**
SECTION 1		**INTRODUCTION**	**4**
	1.1	INTRODUCTION	4
	1.2	DESIGNATION	4
	1.3	SERIAL NUMBER LOCATION	4
	1.4	RATING PLATE AND CE MARK	4
SECTION 2		**PRINCIPLE OF OPERATION**	**5**
	2.1	SELF-EXCITED AVR CONTROLLED GENERATORS	5
	2.2	PERMANENT MAGNET GENERATOR (PMG) EXCITED - AVR CONTROLLED GENERATORS	5
	2.3	AVR ACCESSORIES	5
SECTION 3		**APPLICATION OF THE GENERATOR**	**6**
	3.1	VIBRATION	7
SECTION 4		**INSTALLATION - PART 1**	**8**
	4.1	LIFTING	8
	4.2	ENGINE TO GENERATOR COUPLING ASSEMBLY	8
	4.2.1	TWO BEARING GENERATORS	8
	4.2.2	SINGLE BEARING GENERATORS TYPES HC & HCK	8
	4.3	EARTHING	9
	4.4	PRE-RUNNING CHECKS	9
	4.4.1	INSULATION CHECK	9
	4.4.2	DIRECTION OF ROTATION	9
	4.4.2.1	FAN TYPES	9
	4.4.2.2.	DIRECTION OF ROTATION	9
	4.4.3	VOLTAGE AND FREQUENCY	9
	4.4.4	AVR SETTINGS	9
	4.4.4.1	TYPE SX440 AVR	10
	4.4.4.2	TYPE SX421 AVR	10
	4.4.4.3	TYPE MX341 AVR	10
	4.4.4.4	TYPE MX321 AVR	11
	4.5	GENERATOR SET TESTING	11
	4.5.1	TEST METERING/CABLING	11
	4.6	INITIAL START-UP	11
	4.7	LOAD TESTING	12
	4.7.1	AVR ADJUSTMENTS	12
	4.7.1.1	UFRO (Under Frequency Roll Off) (AVR Types SX440, SX421, MX341 and MX321)	13
	4.7.1.2	EXC TRIP (Excitation Trip)	13
	4.7.1.3	OVER/V (Over Voltage)	13
	4.7.1.4	TRANSIENT LOAD SWITCHING ADJUSTMENTS	13
	4.7.1.5	RAMP	14
	4.8	ACCESSORIES	14
SECTION 5		**INSTALLATION - PART 2**	**14**
	5.1	GENERAL	14
	5.2	GLANDING	14
	5.3	MAXIMUM TORQUE SETTINGS FOR CUSTOMER TERMINAL CONNECTIONS	14
	5.4	EARTHING	14
	5.5	PROTECTION	14
	5.6	COMMISSIONING	14

CONTENTS

SECTION 6		**ACCESSORIES**	**15**
	6.1	REMOTE VOLTAGE ADJUST (ALL AVR TYPES)	15
	6.2	PARALLEL OPERATION	15
	6.2.1	DROOP	15
	6.2.1.1	SETTING PROCEDURE	16
	6.2.2	ASTATIC CONTROL	16
	6.3	MANUAL VOLTAGE REGULATOR (MVR) - MX341 and MX321 AVR	16
	6.4.	OVERVOLTAGE DE-EXCITATION BREAKER SX421 and MX321 AVR	16
	6.4.1	RESETTING THE EXCITATION BREAKER	17
	6.5	CURRENT LIMIT - MX321 AVR	17
	6.5.1	SETTING PROCEDURE	17
	6.6	POWER FACTOR CONTROLLER (PFC3)	17
SECTION 7		**SERVICE AND MAINTENANCE**	**18**
	7.1	WINDING CONDITION	18
	7.1.1	WINDING CONDITION ASSESSMENT	18
	7.1.2	METHODS OF DRYING OUT GENERATORS	18
	7.2	BEARINGS	19
	7.3	AIR FILTERS	21
	7.3.1	CLEANING PROCEDURE	21
	7.3.2	RECHARGING (CHARGING)	21
	7.4	FAULT FINDING	21
	7.4.1	SX440 AVR - FAULT FINDING	21
	7.4.2	SX421 AVR - FAULT FINDING	21
	7.4.3	MX341 AVR - FAULT FINDING	22
	7.4.4	MX321 AVR - FAULT FINDING	22
	7.4.5	RESIDUAL VOLTAGE CHECK	22
	7.4.6	'REFLASHING' TO RESTORE RESIDUAL	22
	7.5	SEPARATE EXCITATION TEST PROCEDURE	23
	7.5.1	GENERATOR WINDINGS, ROTATING DIODES and PERMANENT MAGNET GENERATOR (PMG)	23
	7.5.1.1	BALANCED MAIN TERMINAL VOLTAGES	23
	7.5.1.2	UNBALANCED MAIN TERMINAL VOLTAGES	24
	7.5.2	EXCITATION CONTROL TEST	25
	7.5.2.1	AVR FUNCTION TEST	25
	7.5.3	REMOVAL AND REPLACEMENT OF COMPONENT ASSEMBLIES	25
	7.5.3.1	ANTI-CONDENSATION HEATERS	25
	7.3.3.2	REMOVAL OF PERMANENT MAGNET GENERATOR (PMG)	25
	7.5.3.3	REMOVAL OF BEARINGS	25
	7.5.3.4	MAIN ROTOR ASSEMBLY	29
	7.6	RETURNING TO SERVICE	30
	7.7	MAINTENANCE OF REGREASABLE BEARINGS	30
SECTION 8		**SPARES AND AFTER SALES SERVICE**	**31**
	8.1	RECOMMENDED SPARES	31
	8.2	AFTER SALES SERVICE	31

SECTION 1
INTRODUCTION

1.1 INTRODUCTION

The HC range of generators is of brushless rotating field design, available up to 660V at 50 Hz or 60 Hz and built to meet BS5000 Part 3 and international standards.

1500 rpm (50Hz) or 1800 rpm (60Hz) 4 pole generators are available from 200kW to 2000kW in four frame sizes - HC4, HC5, HC6 and HC7.

1000 rpm (50Hz) or 1200 rpm (60Hz) 6 pole generators are available from 224kW to 1300kW in two frame sizes - HC6 and HC7.

Frame sizes HC4 and HC5 may be provided with a stator fed excitation system using SX440 or SX421 AVR, or with the permanent magnet generator (PMG) powered excitation system, using the MX341 or MX321 AVR.

Frames HC6 and HC7 are fitted with the PMG system using the MX321 AVR.

1.2 DESIGNATION

H	C	·	I	4	4	4	C	1
H	C	·	M	5	3	4	C	2
H	C	·	I	6	3	4	G	1
H	C	·	I	6	3	6	G	2
H	C	·	M	7	3	4	G	2

GENERATOR TYPE HC

SPECIFIC TYPE K = VOLUTED ADAPTOR AND UNI-DIRECTIONAL FAN

INDUSTRIAL = (I) OR MARINE = (M)

FRAME SIZE AND CONTROL TYPE ON HC/MV

NUMBER OF POLES 4, OR 6

CORE LENGTH

NUMBER OF BEARINGS 1 OR 2

1.3 SERIAL NUMBER LOCATION

Each generator has its unique serial number stamped in to the upper section of the drive end frame end-ring.

Inside the terminal box two adhesive rectangular labels have been fixed, each carrying the generators unique identity number. One label has been fixed to the inside of the terminal box sheet metal work, and the second label fixed to the main frame of the generator.

1.4 RATING PLATE AND CE MARK

The generator has been supplied with a self adhesive rating plate label to enable fitting after final assembly and painting. It is intended that this label will be stuck to the outside of the non drive end of the terminal box.

A CE Mark label is also supplied loose for fitment after final assembly and painting. This should be attached to an external surface of the Generator at a suitable location where it will not be obscured by the customer's wiring or other fittings. Before fitting the CE Mark label the genset builder must address the requirements of the relevant EC legislation to ensure the compliance of the genset as a whole. CE compliance will also need to be addressed when installed on site.

The surface in the area where a label is to be stuck must be flat, clean, and any paint finish be fully dry before attempting to attach label. Recommended method for attaching label is peel and fold back sufficient of the backing paper to expose some 20 mm of label adhesive along the edge which is to be located against the sheet metal protrusions. Once this first section of label has been carefully located and stuck into position the backing paper can be progressively removed, as the label is pressed down into position. The adhesive will achieve a permanent bond in 24 hours.

SECTION 2

PRINCIPLE OF OPERATION

2.1 SELF-EXCITED AVR CONTROLLED GENERATORS

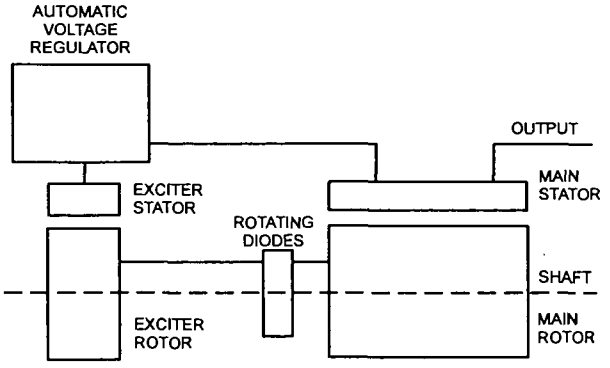

Fig. 1

The main stator provides power for excitation of the exciter field via the SX440 (or SX421) AVR which is the controlling device governing the level of excitation provided to the exciter field. The AVR responds to a voltage sensing signal derived from the main stator winding. By controlling the low power of the exciter field, control of the high power requirement of the main field is achieved through the rectified output of the exciter armature.

The SX440 AVR senses average voltage on two phases ensuring close regulation. In addition it detects engine speed and provides voltage fall off with speed, below a pre-selected speed (Hz) setting, preventing over-excitation at low engine speeds and softening the effect of load switching to relieve the burden on the engine.

The SX421 AVR in addition to the SX440 features has three phase rms sensing and also provides for over voltage protection when used in conjunction with an external circuit breaker (switchboard mounted).

2.2 PERMANENT MAGNET GENERATOR (PMG) EXCITED - AVR CONTROLLED GENERATORS

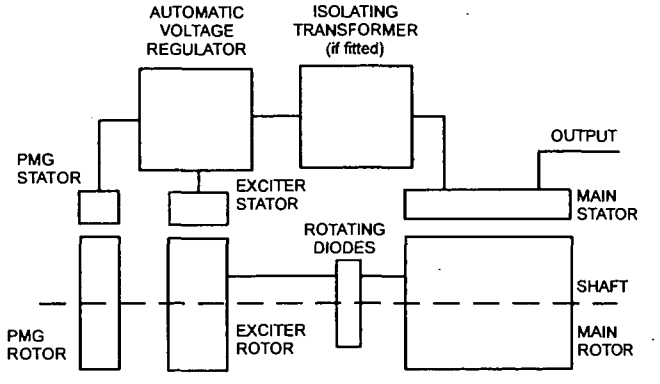

Fig. 2

The permanent magnet generator (PMG) provides power for excitation of the exciter field via the AVR MX341 (or MX321) which is the controlling device governing the level of excitation provided to the exciter field. The AVR responds to a voltage sensing signal derived, via an isolating transformer in the case of MX321 AVR, from the main stator winding. By controlling the low power of the exciter field, control of the high power requirement of the main field is achieved through the rectified output of the exciter armature.

The PMG system provides a constant source of excitation power irrespective of main stator loading and provides high motor starting capability as well as immunity to waveform distortion on the main stator output created by non linear loads, e.g. thyristor controlled dc motor.

The MX341 AVR senses average voltage on two phases ensuring close regulation. In addition it detects engine speed and provides an adjustable voltage fall off with speed, below a pre-selected speed (Hz) setting, preventing over-excitation at low engine speeds and softening the effect of load switching to relieve the burden on the engine. It also provides over-excitation protection which acts following a time delay, to de-excite the generator in the event of excessive exciter field voltage.

The MX321 provides the protection and engine relief features of the MX341 and additionally incorporates 3 phase rms sensing and over-voltage protection.

The detailed function of all the AVR circuits is covered in the load testing section (subsection 4.7).

2.3 AVR ACCESSORIES

The SX440, SX421, MX341 and MX321 AVRs incorporate circuits which, when used in conjunction with accessories, can provide for parallel operation either with 'droop' or 'astatic' control, VAR/PF control and in the case of the MX321 AVR, short circuit current limiting.

Function and adjustment of the accessories which can be fitted inside the generator terminal box are covered in the accessories section of this book.

Separate instructions are provided with other accessories available for control panel mounting.

SECTION 3

APPLICATION OF THE GENERATOR

The generator is supplied as a component part for installation in a generating set. It is not, therefore, practicable to fit all the necessary warning/hazard labels during generator manufacture. The additional labels required are packaged with this Manual, together with a drawing identifying their locations. (see below).

It is the responsibility of the generating set manufacturer to ensure that the correct labels are fitted, and are clearly visible.

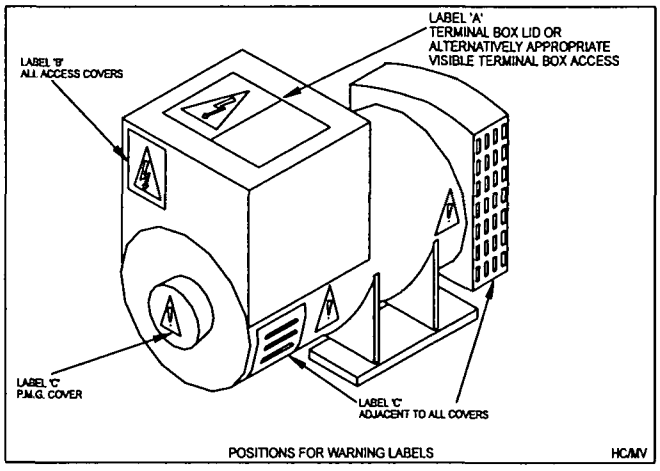

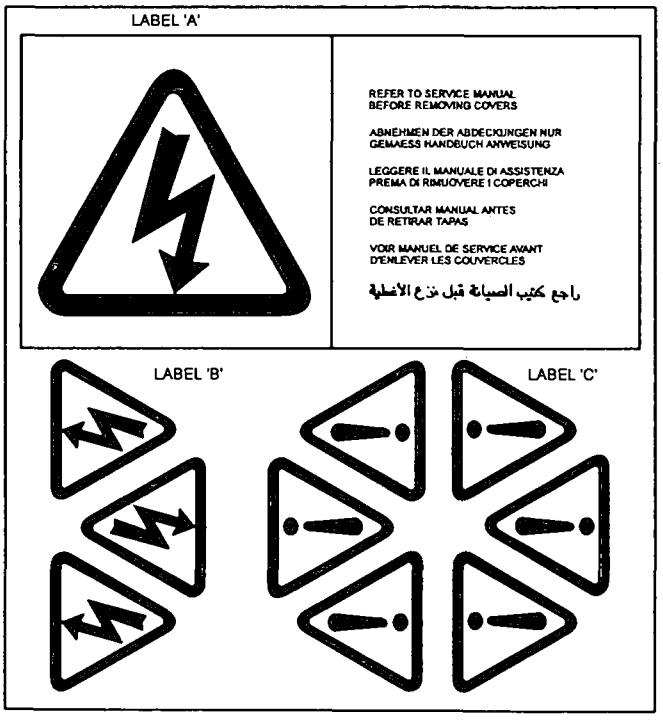

The generators have been designed for use in a maximum ambient temperature of 40°C, and altitude less than 1000 metres above sea level in accordance with BS5000.

Ambients in excess of 40°C, and altitudes above 1000 metres can be tolerated with reduced ratings - refer to the generator nameplate for rating and ambient.

In the event that the generator is required to operate in an ambient in excess of the nameplate value or at altitudes in excess of 1000 metres above sea level, refer to the factory.

The generators are of air-ventilated screen protected drip-proof design and are not suitable for mounting outdoors unless adequately protected by the use of canopies. Anti-condensation heaters are recommended during storage and for standby duty to ensure winding insulation is maintained in good condition.

When installed in a closed canopy it must be ensured that the ambient temperature of the cooling air to the generator does not exceed that for which the generator has been rated.

The canopy should be designed such that the engine air intake to the canopy is separated from the generator intake, particularly where the radiator cooling fan is required to draw air into the canopy. In addition the generator air intake to the canopy should be designed such that the ingress of moisture is prohibited, preferably by use of a two stage filter.

The air intake/outlet must be suitable for the air flow given in the following table with additional pressure drops less than or equal to those given below:

Frame	Air Flow		Additional (intake/outlet) Pressure Drop
	50Hz 1500 Rev/Min	60Hz 1800 Rev/Min	
HC4	0.48m³/sec	0.58m³/sec	6mm water gauge
	1030cfm	1240cfm	(0.25")
HCK4	0.68m³/sec	0.83m³/sec	6mm water gauge
	1450cfm	1760cfm	(0.25")
HC5	1.04m³/sec	1.31m³/sec	6mm water gauge
	2202cfm	2708cfm	(0.25")
HCK5	1.23m³/sec	1.59m³/sec	6mm water gauge
	2615cfm	3366cfm	(0.25")
HC6	1.62m³/sec	1.96m/sec	6mm water gauge
	3420cfm	4156cfm	(0.25")
HC7	2.64m³/sec	3.17m³/sec	6mm water gauge
	5600cfm	6720cfm	(0.25")
HCK7	3.0m³/sec	3.70m³/sec	6mm water gauge
	6550cfm	7860cfm	(0.25")

Table 1

If specified at the time of ordering, HC6 and HC7 generators may be fitted with air filters. Air filters can be supplied factory fitted or as parts for up-fit for the HC4 and HC5 generators. These are oil charged gauze filters and require charging during installation.

Important ! Reduction in cooling air flow or inadequate protection to the generator can result in damage and/or failure of windings.

Dynamic balancing of the generator rotor assembly has been carried out during manufacture in accordance with BS 6861 Part 1 Grade 2.5 to ensure vibration limits of the generator are in accordance with BS 4999 Part 142.

The main vibration frequencies produced by the component generator are as follows:-:

4 pole	1500 rpm	25 Hz
	1800 rpm	30 Hz
6 pole	1000 rpm	16.7 Hz
	1200 rpm	20 Hz

3.1 VIBRATION

Vibrations generated by the engine are complex and contain harmonics of 1.5, 3, 5 or more times the fundamental frequency of vibration. The generator will be subjected to this vibration, which will result in the generator being subjected to vibration levels higher than those derived from the generator itself.
Newage generators are designed to withstand the vibration levels encountered on generating sets built to meet the requirements of ISO 8528-9 and BS5000-3. (Where ISO 8528 is taken to be broad band measurements and BS5000 refers to the predominant frequency of any vibrations on the generating set.)

DEFINITION OF BS5000 - 3

Generators shall be capable of continuously withstanding linear vibration levels with amplitudes of 0.25mm between 5Hz and 8Hz and velocities of 9.0mm/s rms between 8 Hz and 200 Hz when measured at any point directly on the carcass or main frame of the machine. These limits refer only to the predominant frequency of vibration of any complex waveform.

DEFINITION OF ISO 8528 - 9

ISO 8528-9 refers to a broad band of frequencies, the broad band is taken to be between 2 Hertz and 300 Hertz. The table below is an example from ISO 8528 - 9 (value 1). This simplified table lists the vibration limits by kVA range and speed for acceptable genset operation.

VIBRATION LEVELS AS MEASURED ON THE GENERATOR				
Engine Speed Min -1	SET OUTPUT kVA	VIBRATION DISPLACEMENT mm (rms)	VIBRATION VELOCITY mm/s (rms)	VIBRATION ACCELERATION m/s² (rms)
4 POLE 1500 rpm 50 Hz 1800 rpm 60 HZ	≤ 10 kVA	-	-	-
	> 10 but ≤ 50 Kva	0.64	40	25
	> 50 but ≤ 125 kVA	0.4	25	16
	> 125 but ≤ 250 kVA	0.4	25	16
	> 250 kVA	0.32	20	13
6 POLE 1000 rpm 50 Hz 1200 rpm 60 Hz	≥ 250 but ≤ 1250	0.32	20	13
	> 1250	0.29	18	11
The 'Broad band' is taken as 2 Hz - 300 Hz.				

Table 2

It is the responsibility of the generating set designer to ensure the alignment of the genset, stiffness of the bedframe and mountings are such that the vibration limits as defined above are met.

If the vibration levels of the generating set are not within the parameters quoted above :-

1. Consult the genset builder. The genset builder should address the genset design to reduce the vibration levels as much as possible.

2. Discuss, with Newage, the impact of not meeting the above levels on both bearing and generator life expectancy.

Important ! **Exceeding either of the above specifications will have a detrimental effect on the generating set and in particular on the life of the bearings. (See section on bearings). This will invalidate the generator warranty. If you are in any doubt, contact Newage International Limited.**

In standby applications where the running time is limited and reduced life expectancy is accepted, higher levels than specified in BS5000 can be tolerated, up to a maximum of 18mm/sec.

Two bearing generators require a substantial bedplate with engine/generator mounting pads to ensure a good base for accurate alignment. Close coupling of engine to generator can increase the overall rigidity of the set. A flexible coupling, designed to suit the specific engine/generator combination, is recommended to minimise torsional effects.

Alignment of single bearing generators is critical and vibration can occur due to the flexing of the flanges between the engine and generator. A substantial bedplate with engine/generator mounting pads is required.

For the purposes of establishing set design the bending moment at the engine flywheel housing to generator adaptor interface should not exceed that given in the table below:-

FRAME	BENDING MOMENT
4/5	140 kgm. (1000ft.lbs.)
6/7	275 kgm. (2000ft.lbs.)

The maximum bending moment of the engine flange must be checked with the engine manufacturer.

Torsional vibrations occur in all engine-driven shaft systems and may be of a magnitude to cause damage at certain critical speeds. It is therefore necessary to consider the torsional vibration effect on the generator shaft and couplings.

It is the responsibility of the generator set manufacturer to ensure compatibility, and for this purpose drawings showing the shaft dimensions and rotor inertias are available for customers to forward to the engine supplier. In the case of single bearing generators coupling details are included.

Important ! **Torsional incompatibility and/or excessive vibration levels can cause damage or failure of generator and/or engine components.**

The standard terminal box is arranged for cable entry on the right hand side looking from the non drive end of the generator. If specified at the time of order cable entry may be arranged on the opposite side.

The terminal box is constructed with removable panels for easy adaptation to suit specific glanding requirements. Within the terminal box there are insulated terminals for line and neutral connections and provision for earthing. Additional earthing points are provided on the generator feet.

Warning ! **No earth connections are made on the generator and reference to site regulations for earthing must be made. Incorrect earthing or protection arrangements can result in personal injury or death.**

The neutral is NOT connected to the frame.

Fault current curves (decrement curves), together with generator reactance data, are available on request to assist the system designer to select circuit breakers, calculate fault currents and ensure discrimination within the load network.

Warning ! **Incorrect installation, service or replacement of parts can result in severe personal injury or death, and/or equipment damage. Service personnel must be qualified to perform electrical and mechanical service.**

SECTION 4

INSTALLATION - PART 1

4.1 LIFTING

Warning ! **Incorrect lifting or inadequate lifting capacity can result in severe personal injury or equipment damage. MINIMUM LIFTING CAPACITY REQUIRED IS AS INDICATED ON THE LIFTING LABEL. Generator lifting lugs should not be used for lifting the complete generating set.**

Two lifting lugs are provided for use with a shackle and pin type lifting aid. A spreader with chains to ensure that the lift is vertical of suitable length and lifting capacity must be used. Lifting points are designed to position the craneage point as close to the centre of gravity of the generator as possible, but due to design restrictions it is not possible to guarantee that the generator frame will remain horizontal while lifting. Care is therefore needed to avoid personal injury or equipment damage. The correct lifting arrangement is shown on the label attached to the lifting lug. (See sample below).

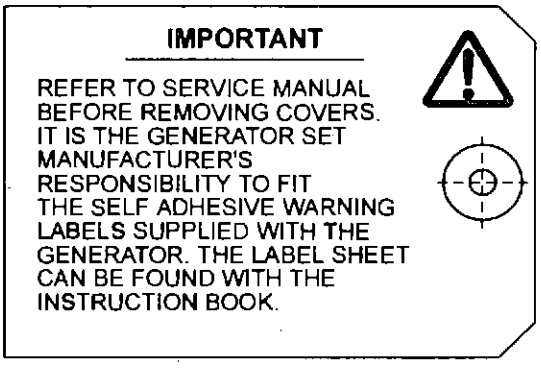

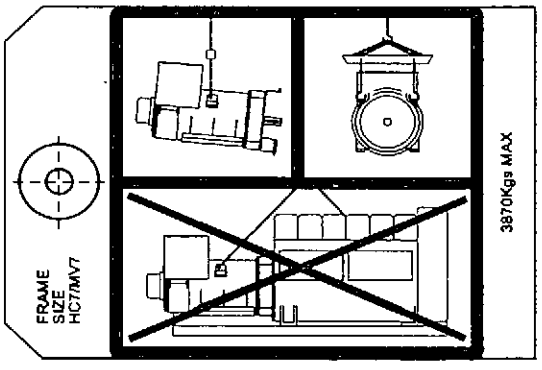

Fig. 3

Single bearing generators are supplied fitted with a rotor retaining bar at the drive end of the shaft. Single bearing generators are also fitted with wooden wedges supporting the fan for transit purposes.

Once the bar is removed to couple the rotor to engine, the rotor is free to move in the frame, and care is needed during coupling and alignment to ensure the frame is kept in the horizontal plane.

4.2 ENGINE TO GENERATOR COUPLING ASSEMBLY

During the assembly of the Generator to the Engine it will be necessary to firstly carefully align, then rotate, the combined Generator rotor - Engine crankshaft assembly, as part of the construction process, to allow location, insertion and tightening of the coupling bolts. This requirement to rotate the combined assemblies exists for both single and two bearing units.

During the construction of single bearing units it is necessary to align the generator's coupling holes with the engine flywheel holes: it is suggested that two diametrically opposite location dowel pins are fitted to the engine flywheel, over which the generator coupling can slide into final location into the engine flywheel spigot recess. The dowels must be removed and replaced by coupling bolts before the final bolt tightening sequence.

While fitting and tightening the coupling bolts it will be necessary to rotate the Engine crankshaft - Generator rotor assembly. Care should be taken to ensure that rotation is carried out in an approved manner that ensures safe working practice when reaching inside the machine to insert or tighten coupling bolts, and that no component of the assembly is damaged by non-approved methods of assembly rotation.

Engine Manufacturers have available a proprietary tool designed to enable manual rotation of the crankshaft assembly. This tool must always be used, having been engineered as an approved method of assembly rotation, by engaging the manually driven pinion with the engine flywheel starter ring-gear.

Danger ! **Before working inside the generator, during the aligning and fitting of coupling bolts, care should be taken to lock the assembly to ensure there is no possibility of assembly rotational movement.**

4.2.1 TWO BEARING GENERATORS

A flexible coupling should be fitted and aligned in accordance with the coupling manufacturer's instruction.

If a close coupling adaptor is used the alignment of machined faces must be checked by offering the generator up to the engine. Shim the generator feet if necessary. Ensure adaptor guards are fitted after generator/engine assembly is complete. Open coupled sets require a suitable guard, to be provided by the set builder.

Axial loading of the generator bearings should be avoided. Should it be unavoidable contact the factory for advice.

Caution ! **Incorrect guarding and/or generator alignment can result in personal injury and/or equipment damage.**

4.2.2 SINGLE BEARING GENERATORS TYPES HC & HCK

For transit and storage purposes the generator frame spigot and rotor coupling plates have been coated with a rust preventative. This MUST BE removed before assembly to engine.

A practical method for removal of this coating is to clean the mating surface areas with a de-greasing agent based on a petroleum solvent.

Caution ! **Care should be taken not to allow any cleaning agent to come into prolonged contact with skin.**

Alignment of single bearing generators is critical. If necessary shim the generator feet to ensure alignment of the machined surfaces.

The sequence of assembly to the engine should generally be as follows:

1. On the engine check the distance from the coupling mating face on the flywheel to the flywheel housing mating face. This should be within 0.5mm of nominal dimension. This is necessary to ensure that a thrust is not applied to the ac generator bearing or engine bearing.

2. Check that the bolts securing the flexible plates to the coupling hub are tight and locked into position. Refer to Section 7, subsection 7.5.3.4 for tightening torques.

3. Remove covers from the drive end of the generator to gain access to coupling and adaptor bolts. Check coupling joint interfaces are clean and lubricant free.

4. **TYPE HC GENERATORS**

   Check that coupling discs are concentric with adaptor spigot. This can be adjusted by the use of tapered wooden wedges between the fan and adaptor. Alternatively the rotor can be suspended by means of a rope sling through the adaptor opening.

   Offer the generator to engine and engage both coupling discs and housing spigots at same time, pushing generator towards engine until coupling discs are against flywheel face, and housing spigots located.

   TYPE HCK GENERATORS

   Screw the two supplied location studs into diametrically opposite engine flywheel tapped holes, about the horizontal centre line. Offer the generator to engine, locating rotor coupling discs over the location studs, pushing generator towards engine until housing spigots locate and coupling discs are against flywheel face.

5. Fit housing and coupling bolts taking care to use heavy gauge washers between coupling bolt head and coupling disc. Tighten bolts evenly around assembly sufficiently to ensure correct alignment.

   TYPE HCK GENERATORS

   Remove location studs and replace with coupling-flywheel bolts.

6. Tighten housing bolts.

7. Tighten coupling disc to flywheel bolts. Refer to engine manufacturers manual for correct tightening torque.

8. **TYPE HC GENERATORS**

   Remove rotor aligning aids, either wooden wedges, or the two M10 set screws and sheet metal wear plates.

Caution ! **Incorrect guarding and/or generator alignment can result in personal injury and/or equipment damage.**

4.3 EARTHING

The generator frame should be solidly bonded to the generating set bedplate. If antivibration mounts are fitted between the generator frame and its bedplate a suitably rated earth conductor (normally one half of the cross sectional area of the main line cables) should bridge across the antivibration mount.

Warning ! **Refer to local regulations to ensure that the correct earthing procedure has been followed.**

4.4 PRE-RUNNING CHECKS

4.4.1 INSULATION CHECK

Insulation tests should be carried out before running the generating set, both after assembly and after installation on site. (see Section 7.1).

Important ! **The windings have been H.V. tested during manufacture and further H.V. testing may degrade the insulation with consequent reduction in operating life. Should it be necessary to demonstrate H.V. testing, for customer acceptance, the tests must be carried out at reduced voltage levels i.e. Test Voltage= 0.8 (2 X Rated Voltage + 1000)**

4.4.2 DIRECTION OF ROTATION

4.4.2.1 FAN TYPES.

TYPE HC 4 & 5 GENERATORS.

These machines are fitted with a radial bladed bi-directional fan, operating within a conventional full height air outlet grills.

TYPE HC 6 & 7 GENERATORS.

These machines are fitted with an inclined bladed fan , operating within a conventional full height air outlet grills.

TYPE HCK 4, 5, & 7 GENERATORS.

These machines are fitted with a inclined bladed fan, operating within a voluted drive end adaptor with outlet grills half thee machine height . Designed to optimise the fans performance.

4.4.2.2 DIRECTION OF ROTATION

TYPE HCK GENERATORS.

These machines have been designed with an improved cooling fan system, incorporating the voluted fan housing. Therefore these machines are suitable only for clockwise rotation, as viewed from the drive end.

TYPE HC GENERATORS.

These machines can be operated in either direction of rotation.

Phase Rotation

HC generators can rotate efficiently in either direction. However phase rotation is fixed for clockwise rotation as viewed from the drive end. If the generator is to be rotated in a counter-clockwise direction it will be necessary for the customers to adjust their cabling to the output terminals accordingly. Refer to the factory for a reverse wiring diagram.

4.4.3 VOLTAGE AND FREQUENCY

Check that the voltage and frequency levels required for the generating set application are as indicated on the generator nameplate.

HC4/5 generators normally have a 12 ends out reconnectable winding. If it is necessary to reconnect the stator for the voltage required, refer to diagrams in the back of this manual.

4.4.4 AVR SETTINGS

To make AVR selections and adjustments remove the AVR cover and refer to 4.4.4.1, 4.4.4.2, 4.4.4.3 or 4.4.4.4 depending upon type of AVR fitted. Reference to the generator nameplate will indicate AVR type (SX440, SX421, MX341 or MX321).

Most of the AVR adjustments are factory set in positions which will give satisfactory performance during initial running tests. Subsequent adjustment may be required to achieve optimum performance of the set under operating conditions. Refer to 'Load Testing' section for details.

4.4.4.1 TYPE SX440 AVR

The following 'jumper' connections on the AVR should be checked to ensure they are correctly set for the generating set application.

Refer to Fig. 4a for location of selection links.

1. Frequency selection terminals

50Hz operation	LINK C-50
60Hz operation	LINK C-60

2. Stability selection terminals

Frame HC4/5	LINK B-C
Frame HC6/7	LINK A-B

3. Sensing selection terminals

	LINK 2-3
	LINK 4-5
	LINK 6-7

4. Excitation Interruption Link

	LINK K1-K2

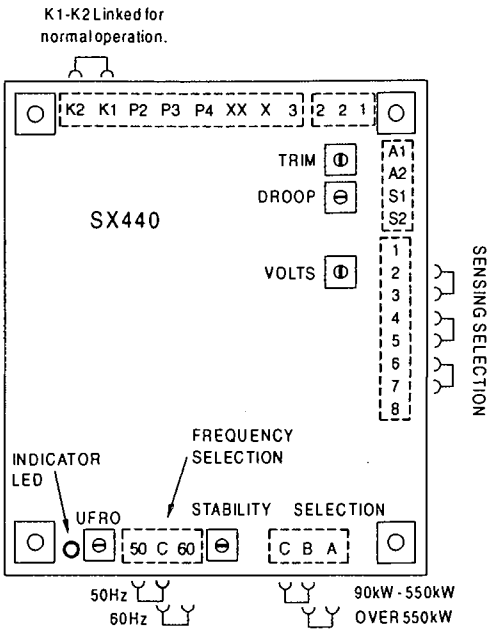

Fig. 4a

4.4.4.2 TYPE SX421 AVR

The following 'jumper' connections on the AVR should be checked to ensure they are correctly set for the generating set application.

Refer to Fig. 4b for location of selection links.

1.Frequency selection terminals

50Hz operation	LINK C-50
60Hz operation	LINK C-60

2.Stability selection terminals

Frame HC4/5	LINK B-C
Frame HC6/7	LINK A-B

3. Excitation Interruption Link

Linked at auxiliary terminal block.	K1-K2

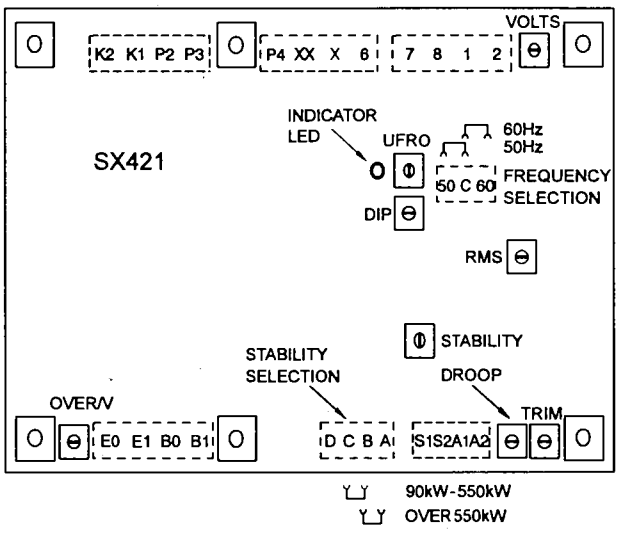

Fig. 4b

4.4.4.3 TYPE MX341 AVR

The following 'jumper' connections on the AVR should be checked to ensure they are correctly set for the generating set application.

Refer to Fig. 4c for location of selection links.

4 pole	50Hz operation	LINK 2-3
4 pole	60Hz operation	LINK 1-3
6 pole	50Hz operation	NO LINK
6 pole	60Hz operation	LINK 1-2

2. Stability selection terminals

Frame HC4/5	LINK B-C
Frame HC6/7	LINK A-B

3. Sensing selection terminals

	LINK 2-3
	LINK 4-5
	LINK 6-7

4. Excitation Interruption Link

	LINK K1-K2

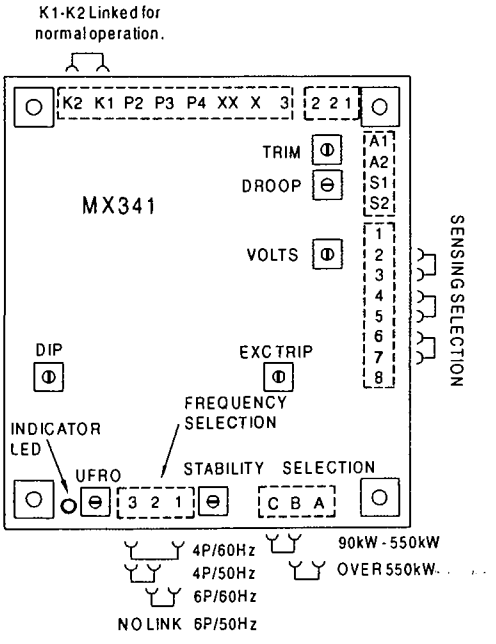

Fig. 4c

4.4.4.4 TYPE MX321 AVR

The following 'jumper' connections on the AVR should be checked to ensure they are correctly set for the generating set application.

Refer to Fig. 4d for location of selection links.

1. Frequency selection terminals

4 pole	50Hz operation	LINK 2-3
4 pole	60Hz operation	LINK 1-3
6 pole	50Hz operation	NO LINK
6 pole	60Hz operation	LINK 1-2

2. Stability selection terminals

Frame HC4/5	LINK B-C
Frame HC6/7	LINK A-B

3. Excitation Interruption Link

Linked at auxiliary terminal block. K1-K2

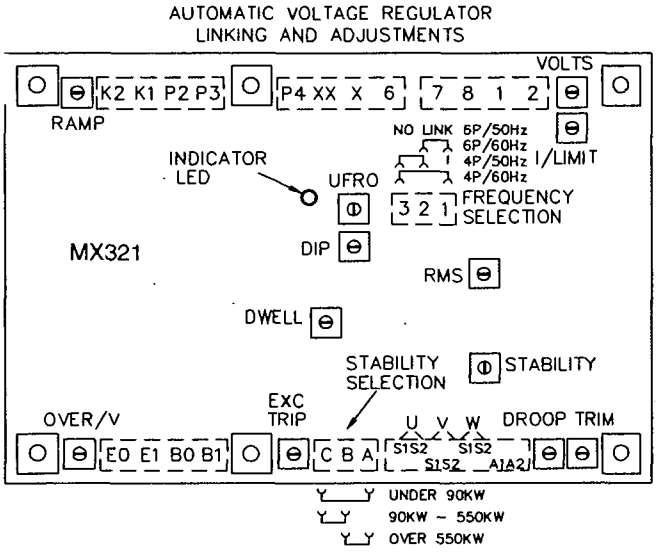

Fig. 4d

4.5 GENERATOR SET TESTING

Warning ! **During testing it may be necessary to remove covers to adjust controls exposing 'live' terminals or components. Only personnel qualified to perform electrical service should carry out testing and/or adjustments.**

4.5.1 TEST METERING/CABLING

Connect any instrument wiring and cabling required for initial test purposes with permanent or spring-clip type connectors.

Minimum instrumentation for testing should be line - line or line to neutral voltmeter, Hz meter, load current metering and kW meter. If reactive load is used a power factor meter is desirable.

Important ! **When fitting power cables for load testing purposes, ensure cable voltage rating is at least equal to the generator rated voltage. The load cable termination should be placed on top of the winding lead termination and clamped between the two nuts provided, on HC4/5 generators.**

Caution ! **Check that all wiring terminations for internal or external wiring are secure, and fit all terminal box covers and guards. Failure to secure wiring and/or covers may result in personal injury and/or equipment failure.**

4.6 INITIAL START-UP

Warning ! **During testing it may be necessary to remove covers to adjust controls exposing 'live' terminals or components. Only personnel qualified to perform electrical service should carry out testing and/or adjustments. Refit all access covers after adjustments are completed.**

On completion of generating set assembly and before starting the generating set ensure that all engine manufacturer's pre-running procedures have been completed, and that adjustment of the engine governor is such that the generator will not be subjected to speeds in excess of 125% of the rated speed.

Important ! **Overspeeding of the generator during initial setting of the speed governor can result in damage to the generator rotating components.**

In addition remove the AVR access cover and turn VOLTS control fully anti-clockwise. Start the generating set and run on no-load at nominal frequency. Slowly turn VOLTS control potentiometer clockwise until rated voltage is reached. Refer to Fig. 4a - 4d for control potentiometer location.

Important ! **Do not increase the voltage above the rated generator voltage shown on the generator nameplate.**

The STABILITY control potentiometer will have been pre-set and should normally not require adjustment, but should this be required, usually identified by oscillation of the voltmeter, refer to Fig. 4a - 4d for control potentiometer location and proceed as follows:-

1. Run the generating set on no-load and check that speed is correct and stable.

2. Turn the STABILITY control potentiometer clockwise, then turn slowly anti-clockwise until the generator voltage starts to become unstable.

The correct setting is slightly clockwise from this position (i.e. where the machine volts are stable but close to the unstable region).

4.7 LOAD TESTING

Warning !

During testing it may be necessary to remove covers to adjust controls exposing 'live' terminals or components. Only personnel qualified to perform electrical service should carry out testing and/or adjustments. Refit all access covers after adjustments are completed.

4.7.1 AVR ADJUSTMENTS

Refer to Fig. 4a - 4d for control potentiometer locations.

Having adjusted VOLTS and STABILITY during the initial start-up procedure, other AVR control functions should not normally need adjustment. If instability on load is experienced recheck stability setting. Refer to subsection 4.6.

If however, poor voltage regulation on-load or voltage collapse is experienced, refer to the following paragraphs on each function to a) check that the symptoms observed do indicate adjustment is necessary, and b) to make the adjustment correctly.

4.7.1.1 UFRO (Under Frequency Roll Off) (AVR Types SX440, SX421, MX341 and MX321)

The AVR incorporates an underspeed protection circuit which gives a voltage/speed (Hz) characteristic as shown:

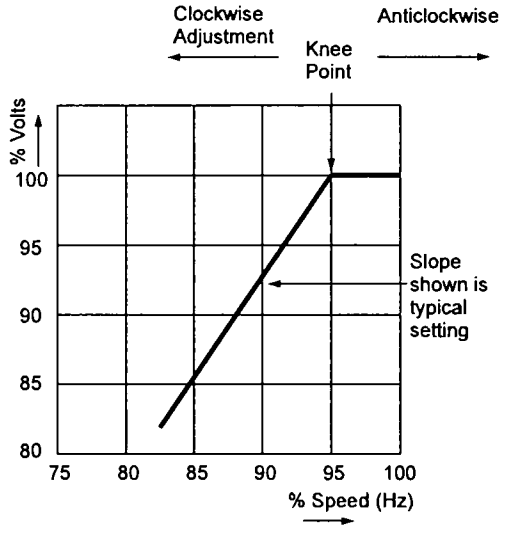

Fig. 5

The UFRO control potentiometer sets the "knee point".

Symptoms of incorrect setting are a) the light emitting diode (LED) indicator, just above the UFRO Control potentiometer, being permanently lit when the generator is on load, and b) poor voltage regulation on load, i.e. operation on the sloping part of the characteristic.

Clockwise adjustment lowers the frequency (speed) setting of the "knee point" and extinguishes the LED. For Optimum setting the LED should illuminate as the frequency falls just below nominal frequency, i.e. 47Hz on a 50Hz generator or 57Hz on a 60Hz generator.

Important ! **With AVR Types MX341 and MX321. If the LED is illuminated and no output voltage is present, refer to EXC TRIP and/or OVER/V sections below.**

4.7.1.2 EXC TRIP (Excitation Trip) AVR Types MX341 and MX321

An AVR supplied from a permanent magnet generator inherently delivers maximum excitation power on a line to line or line to neutral short circuit. In order to protect the generator windings the AVR incorporates an over excitation circuit which detects high excitation and removes it after a pre-determined time, i.e. 8-10 seconds.

Symptoms of incorrect setting are the generator output collapses on load or small overload, and the LED is permanently illuminated.

The correct setting is 70 volts +/- 5% between terminals X and XX.

4.7.1.3 OVER/V (Over Voltage) AVR Types SX421 and MX321

Over voltage protection circuitry is included in the AVR to remove generator excitation in the event of loss of AVR sensing input.

The MX321 has both internal electronic de-excitation and provision of a signal to operate an external circuit breaker.
The SX421 only provides a signal to operate an external breaker, which MUST be fitted if over voltage protection is required.
Incorrect setting would cause the generator output voltage to collapse at no-load or on removal of load, and the LED to be illuminated.

The correct setting is 300 volts +/-5% across terminals E1, E0.

Clockwise adjustment of the OVER/V control potentiometer will increase the voltage at which the circuit operates.

4.7.1.4 TRANSIENT LOAD SWITCHING ADJUSTMENTS AVR Types SX421, MX341 and MX321

The additional function controls of DIP and DWELL are provided to enable the load acceptance capability of the generating set to be optimised. The overall generating set performance depends upon the engine capability and governor response, in conjunction with the generator characteristics.

It is not possible to adjust the level of voltage dip or recovery independently from the engine performance, and there will always be a 'trade off' between frequency dip and voltage dip.

DIP-AVR Types SX421, MX341 and MX321

The dip function control potentiometer adjusts the slope of the voltage/speed (Hz) characteristic below the knee point as shown below:

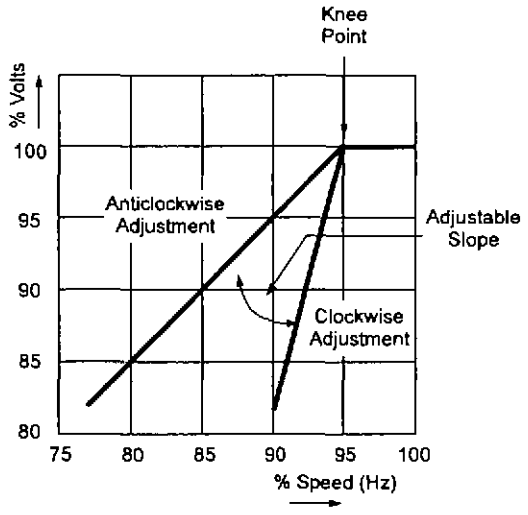

Fig. 6

DWELL-AVR Type MX321

The dwell function introduces a time delay between the recovery of voltage and recovery of speed.

The purpose of the time delay is to reduce the generator kW below the available engine kW during the recovery period, thus allowing an improved speed recovery.

Again this control is only functional below the "knee point", i.e. if the speed stays above the knee point during load switching there is no effect from the DWELL function setting.

Clockwise adjustment gives increased recovery time.

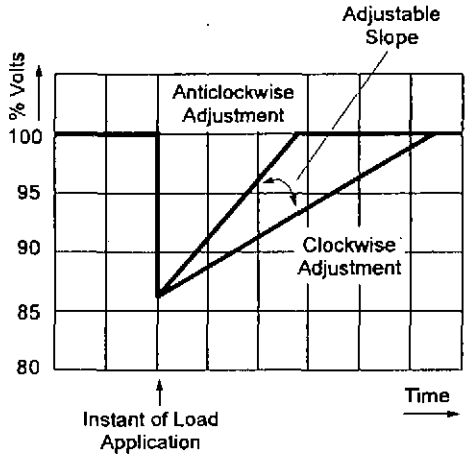

Fig. 7

The graphs shown above are representations only, since it is impossible to show the combined effects of voltage regulator and engine governor performance.

Warning !

Failure to refit covers can result in operator personal injury or death.

4.7.1.5 RAMP
AVR Type MX321

The RAMP potentiometer enables adjustment of the time taken for the generator's initial build up to normal rated voltage during each start and run up to speed. The potentiometer is factory set to give a ramp time of three seconds, which is considered to be suitable for most applications. This time can be reduced to one second by turning the pot. fully counter clockwise, and increased to eight seconds by turning the pot. fully clockwise.

4.8 ACCESSORIES

Refer to the "ACCESSORIES" Section of this Manual for setting up procedures related to generator mounted accessories.

If there are accessories for control panel mounting supplied with the generator refer to the specific accessory fitting procedures inserted inside the back cover of this book.

Replace AVR access cover after all adjustments are completed.

SECTION 5

INSTALLATION - PART 2

5.1 GENERAL

The extent of site installation will depend upon the generating set build, e.g. if the generator is installed in a canopied set with integral switchboards and circuit breaker, on site installation will be limited to connecting up the site load to the generating set output terminals. In this case reference should be made to the generating set manufacturer's instruction book and any pertinent local regulations.

If the generator has been installed on a set without switchboard or circuit breaker the following points relating to connecting up the generator should be noted.

5.2 GLANDING

The terminal box is arranged for glanding on the right hand side (or if specifically ordered on the left hand side) viewed from the non drive end. Both panels are removable for drilling/ punching to suit glands/or glanding boxes. If single core cables are taken through the terminal box side panel an insulated or non-magnetic gland plate should be fitted.

At entry to the terminal box incoming cables should be supported by a recognised glanding method such that minimum unsupported weight, and no axial force is transferred to the terminal assembly.

Incoming cables external to the terminal box should be supported at a sufficient distance from the centre line of the generating set so as to avoid a tight radius at the point of entry into the terminal box panel, and allow movement of the generator set on its anti-vibration mountings without excessive stress on the cable.

Before making final connections, test the insulation resistance of the windings. The AVR should be disconnected during this test and RTD leads grounded.

A 500V Megger or similar instrument should be used. Should the insulation resistance be less than 5MΩ the windings must be dried out as detailed in the Service and Maintenance section of this manual.

When making connections to the terminals of Frame 4 generators, the incoming cable termination lug should be placed on top of the winding lead termination lug(s) and then clamped with the nut provided.

Important ! **To avoid the possibility of swarf entering any electrical components in the terminal box, panels must be removed for drilling.**

5.3 TORQUE SETTINGS FOR TERMINAL CONNECTIONS

Pre treatment: Clean plated surfaces with a degreasing agent, then lightly abrade them to remove any tarnish. Don't score the surface.

The **generator torque settings** for all connections, links, CT's, accessories, cables, etc. is 45 Nm.

The **customer output cables** should be connected to the terminals using 8.8 grade steel bolts and associated anti-vibration hardware.

The following table is for your guidance.

FRAME	HOLE SIZE	BOLT SIZE	TORQUE Nm
4	-	12	45
5	13	12	50
6	17	14	70
7	17	16	90

Table 3

Carry out **periodic checks** to ensure the correct torque settings.

5.4 EARTHING

The neutral of the generator is not bonded to the generator frame as supplied from the factory. An earth terminal is provided inside the terminal box adjacent to the main terminals. Should it be required to operate with the neutral earthed a substantial earth conductor (normally equivalent to one half of the section of the line conductors) must be connected between the neutral and the earth terminal inside the terminal box. It is the responsibility of the generating set builder to ensure the generating set bedplate and generator frame are all bonded to the main earth terminal in the terminal box.

Caution ! **Reference to local electricity regulations or safety rules should be made to ensure correct earthing procedures have been followed.**

5.5 PROTECTION

It is the responsibility of the end user and his contractors/sub-contractors to ensure that the overall system protection meets the needs of any inspectorate, local electricity authority or safety rules, pertaining to the site location.

To enable the system designer to achieve the necessary protection and/or discrimination, fault current curves are available on request from the factory, together with generator reactance values to enable fault current calculations to be made.

Warning ! **Incorrect installation and/or protective systems can result in personal injury and/or equipment damage. Installers must be qualified to perform electrical installation work.**

5.6 COMMISSIONING

Ensure that all external cabling is correct and that all the generating set manufacturer's pre-running checks have been carried out before starting the set.

Generators fitted with air filters should have the filters charged with oil prior to commissioning. Refer to Service Section for charging procedure (subsection 7.3.2).

The generator AVR controls will have been adjusted during the generating set manufacturer's tests and should normally not require further adjustment.

Should malfunction occur during commissioning refer to Service and Maintenance section 'Fault Finding' procedure (subsection 7.4).

SECTION 6

ACCESSORIES

Generator control accessories may be fitted, as an option, in the generator terminal box. If fitted at the time of supply, the wiring diagram(s) in the back of this book shows the connections. When the options are supplied separately, fitting instructions are provided with the accessory.

The following table indicates availability of accessories with the differing AVRs.

AVR Model	Paralleling Droop or Astatic	Manual Voltage Regulator	VAr/PF Control	Current Limit
SX440	✔	×	✔	×
SX421	✔	×	✔	×
MX341	✔	✔	✔	×
MX321	✔	✔	✔	✔

Table 4

6.1 REMOTE VOLTAGE ADJUST (ALL AVR TYPES)

A remote voltage adjust (hand trimmer) can be fitted.

The remote voltage adjustment potentiometer is connected across AVR terminals 1-2.

These terminals are normally linked.

When the remote voltage adjust potentiometer is used the link across terminals 1-2 must be removed.

On AVR types SX440 and MX341 the link 1-2 is on an adjacent terminal block.

On AVR types SX421 and MX321 the link 1-2 is on the AVR terminals.

6.2 PARALLEL OPERATION

Understanding of the following notes on parallel operation is useful before attempting the fitting or setting of the droop kit accessory. When operating in parallel with other generators or the mains, it is essential that the phase sequence of the incoming generator matches that of the busbar and also that all of the following conditions are met before the circuit breaker of the incoming generator is closed on to the busbar (or operational generator).

1. Frequency must match within close limits.
2. Voltages must match within close limits.
3. Phase angle of voltages must match within close limits.

A variety of techniques, varying from simple synchronising lamps to fully automatic synchronisers, can be used to ensure these conditions are met.

Once connected in parallel a minimum instrumentation level per generator of voltmeter, ammeter, wattmeter (measuring total power per generator), and frequency meter is required in order to adjust the engine and generator controls to share kW in relation to engine ratings and kVAr in relation to generator ratings.

Important ! Failure to meet conditions 1, 2, and 3 when closing the circuit breaker, will generate excessive mechanical and electrical stresses, resulting in equipment damage.

It is important to recognise that

1. kW are derived from the engine, and speed governor characteristics determine the kW sharing between sets

and

2. kVAr are derived from the generator, and excitation control characteristics determine the kVAr sharing.

Reference should be made to the generating set manufacturer's instructions for setting the governor controls.

6.2.1 DROOP

The most commonly used method of kVAr sharing is to create a generator voltage characteristic which falls with decreasing power factor (increasing kVAr). This is achieved with a current transformer (C.T.) which provides a signal dependent on current phase angle (i.e. power factor) to the AVR.

The current transformer has a burden resistor on the AVR board, and a percentage of the burden resistor voltage is summed into the AVR circuit. Increasing droop is obtained by turning the DROOP control potentiometer clockwise.

The diagrams below indicate the effect of droop in a simple two generator system:-

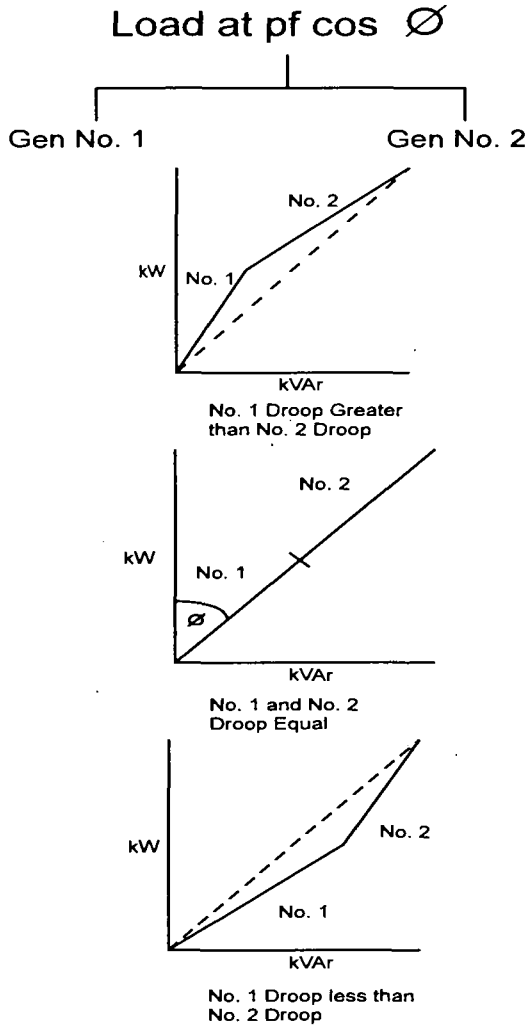

Fig. 8

Generally 5% droop at full load current zero p.f. is sufficient to ensure kVAr sharing.

If the droop accessory has been supplied with the generator it will have been tested to ensure correct polarity and set to a nominal level of droop. The final level of droop will be set during generating set commissioning.

Although nominal droop setting may be factory set it is advisable to go through the setting procedure below.

6.2.1.1 SETTING PROCEDURE

Depending upon available load the following settings should be used - all are based on rated current level.

0.8 P.F. LOAD	(at full load current)	SET DROOP TO 3%
Zero P.F. LOAD	(at full load current)	SET DROOP TO 5%

Setting the droop with low power factor load is the most accurate.

Run each generator as a single unit at rated frequency or rated frequency + 4% depending upon type of governor and nominal voltage. Apply available load to rated current of the generator. Adjust 'DROOP' control potentiometer to give droop in line with above table. Clockwise rotation increases amount of droop. Refer to Fig. 4a - 4d for potentiometer locations.

Note 1)
Reverse polarity of the C.T. will raise the generator voltage with load. The polarities S1-S2 shown on the wiring diagrams are correct for clockwise rotation of the generator looking at the drive end. Reversed rotation requires S1-S2 to be reversed.

Note 2)
The most important aspect is to set all generators equal. The precise level of droop is less critical.

Note 3)
A generator operated as a single unit with a droop circuit set at rated load 0.8 power factor is unable to maintain the usual 0.5% regulation. A shorting switch can be connected across S1-S2 to restore regulation for single running.

Important ! **LOSS OF FUEL to an engine can cause its generator to motor with consequent damage to the generator windings. Reverse power relays should be fitted to trip main circuit breaker. LOSS OF EXCITATION to the generator can result in large current oscillations with consequent damage to generator windings. Excitation loss detection equipment should be fitted to trip main circuit breaker.**

6.2.2 ASTATIC CONTROL

The 'droop' current transformer can be used in a connection arrangement which enables the normal regulation of the generator to be maintained when operating in parallel.

This feature is only supplied from the factory as a fitted droop kit, however, if requested at the time of order, the diagrams inside the back cover of this book will give the necessary site connections. The end user is required to provide a shorting switch for the droop current transformer secondary.

Important ! **When using this connection arrangement a shorting switch is required across each C.T. burden (terminals S1 and S2.) The switch must be closed a) when a generating set is not running and b) when a generating set is selected for single running.**

Should the generator be required to be converted from standard droop to 'astatic' control, diagrams are available on request.

The setting procedure is exactly the same as for DROOP. (Subsection 6.2.1.1)

6.3 MANUAL VOLTAGE REGULATOR (MVR) - MX341 and MX321 AVR

This accessory is provided as an 'emergency' excitation system, in the event of an AVR failure.

Powered from a PMG output the unit is manually set, but automatically controls the excitation current, independent of generator voltage or frequency.

The unit is provided with 'MANUAL', 'OFF', 'AUTO' switching facility.

'MANUAL'
- position connects the exciter field to the MVR output. Generator output is then controlled by the operator adjusting the excitation current.

'OFF'
- disconnects the exciter field from both MVR and the normal AVR.

'AUTO'
- connects the exciter field to the normal AVR and the generator output is controlled at the pre-set voltage under AVR control.

6.4 OVERVOLTAGE DE-EXCITATION BREAKER SX421 and MX321 AVR

This accessory provides positive interruption of the excitation power in the event of overvoltage due to loss of sensing or internal AVR faults including the output power device.

With the MX321 AVR this accessory is supplied loose for fitting in the control panel.

In the case of the SX421 the circuit breaker is always supplied and will normally be fitted in the generator.

Important ! **When the CB is supplied loose, terminals K1-K2 at the auxiliary terminal block are fitted with a link to enable operation of the AVR. When connecting the circuit breaker this link must be removed.**

6.4.1 RESETTING THE EXCITATION BREAKER

In the event of operation of the circuit breaker, indicated by loss of generator output voltage, manual resetting is required. When in the "tripped" state the circuit breaker switch lever shows "OFF". To reset move the switch lever to the position showing "ON".

Danger !

Terminals which are LIVE with the generating set running are exposed when the AVR access cover is removed. Resetting of the circuit breaker must be carried out with the generating set stationary, and engine starting circuits disabled.

When fitted in the generator, access to the breaker is gained by removal of the AVR access cover.

The circuit breaker is mounted on the AVR mounting bracket either to the left or to the right of the AVR depending upon AVR position. After resetting the circuit breaker replace the AVR access cover before restarting the generating set. Should resetting of the circuit breaker not restore the generator to normal operation, refer to subsection 7.5.

6.5 CURRENT LIMIT - MX321 AVR

These accessories work in conjunction with the AVR circuits to provide an adjustment to the level of current delivered into a fault. One current transformer (CT) per phase is fitted to provide current limiting on any line to line or line to neutral fault.

Note: The W phase CT can also provide "DROOP". Refer to 6.2.1.1. for setting droop independent of current limit.

Adjustment means is provided with the "I/LIMIT" control potentiometer on the AVR. Refer to Fig. 4d for location. If current limit transformers are supplied with the generator the limit will be set in accordance with the level specified at the time of order, and no further adjustment will be necessary. However, should the level need to be adjusted, refer to the setting procedure given in 6.5.1.

6.5.1 SETTING PROCEDURE

Run the generating set on no-load and check that engine governor is set to control nominal speed.

Stop the generating set. Remove the link between terminals K1-K2 at the auxiliary terminal block and connect a 5A switch across the terminals K1-K2.

Turn the "I/LIMIT" control potentiometer fully anticlockwise. Short circuit the stator winding with a bolted 3 phase short at the main terminals. An AC current clip-on ammeter is required to measure the winding lead current.

With the switch across K1-K2 open start the generating set.

Close the switch across K1-K2 and turn the "I/LIMIT" control potentiometer clockwise until required current level is observed on the clip-on ammeter. As soon as correct setting is achieved open the K1-K2 switch.

Should the current collapse during the setting procedure, the internal protective circuits of the AVR will have operated. In this event shut down the set and open the K1-K2 switch. Restart the set and run for 10 minutes with K1-K2 switch open, to cool the generator windings, before attempting to resume the setting procedure.

Important ! **Failure to carry out the correct COOLING procedure may cause overheating and consequent damage to the generator windings.**

6.6 POWER FACTOR CONTROLLER (PFC3)

This accessory is primarily designed for those generator applications where operation in parallel with the mains supply is required.

Protection against loss of mains voltage or generator excitation is not included in the unit and the system designer must incorporate suitable protection.

The electronic control unit requires both droop and kVAr current transformers. When supplied with the generator, wiring diagrams inside the back cover of this manual show the connections and the additional instruction leaflet provided gives details of setting procedures for the power factor controller (PFC3).

The unit monitors the power factor of the generator current and adjusts excitation to maintain the power factor constant.

This mode can also be used to control the power factor of the mains if the point of current monitoring is moved to the mains cables. Refer to the factory for appropriate details.

It is also possible to operate the unit to control kVAr of the generator if required. Refer to the factory for appropriate details.

SECTION 7

SERVICE AND MAINTENANCE

As part of routine maintenance procedures, periodic attention to winding condition (particularly when generators have been idle for a long period) and bearings is recommended. (Refer to subsections 7.1 and 7.2 respectively).

When generators are fitted with air filters regular inspection and filter maintenance is required. (Refer to subsection 7.3).

7.1 WINDING CONDITION

Warning !

Service and fault finding procedures present hazards which can result in severe personal injury or death. Only personnel qualified to perform electrical and mechanical service should carry out these procedures.
Ensure engine starting circuits are disabled before commencing service or maintenance procedures. Isolate any anti-condensation heater supply.

Guidance of Typical Insulation Resistance [IR] Values

The following is offered as general information about IR values and is aimed at providing guidance about the typical IR values for generators from new through to the point of refurbishment.

New Machines

The generators Insulation Resistance, along with many other critical factors, will have been measured during the alternator manufacturing process. The generator will have been transported with an appropriate packaging suitable for the method of delivery to the Generating Set assemblers works. Where we expect it to be stored in a suitable location protected from adverse environmental conditions.

However, absolute assurance that the generator will arrive at the Gen-set production line with IR values still at the factory test levels of above 100 MΩ cannot be guaranteed.

At Generating Set Manufacturers Works

The generator should have been transported and stored such that it will be delivered to the assembly area in a clean dry condition. If held in appropriate storage conditions the generator IR value should typically be 25 MΩ.

If the unused/new generators IR values fall below 10 MΩ then a drying out procedure should be implemented by one of the processes outlined below before being despatched to the end customer's site. Some investigation should be undertaken into the storage conditions of the generator while on site.

Generators in Service

Whilst It is known that a generator will give reliable service with an IR value of just 1.0 MΩ. For a relatively new generator to be so low it must have been subjected to inappropriate operating or storage conditions.

Any temporarily reduction in IR values can be restored to expected values by following one of the drying out procedures.

7.1.1 WINDING CONDITION ASSESSMENT

Caution ! **The AVR should be disconnected and the Resistance Temperature Detector (R.T.D.) leads grounded during this test.**

The condition of the windings can be assessed by measurement of insulation resistance [IR] between phase to phase, and phase to earth.

Measurement of winding insulation should be carried out: -

1. As part of a periodic maintenance plan.
2. After prolonged periods of shutdown.
3. When low insulation is suspected, e.g. damp or wet windings.

Care should be taken when dealing with windings that are suspected of being excessively damp or dirty. The initial measurement of the [IR] Insulation Resistance should be established using a low voltage (500V) megger type instrument. If manually powered the handle should initially be turned slowly so that the full test voltage will not be applied, and only applied for long enough to very quickly assess the situation if low values are suspected or immediately indicated.

Full megger tests or any other form of high voltage test should not be applied until the windings have been dried out and if necessary cleaned.

Procedure for Insulation Testing

Disconnect all electronic components, AVR, electronic protection equipment etc. Ground the [RTD's] Resistance Temperature Detection devices if fitted. Short out the diodes on the rotating diode assembly. Be aware of all components connected to the system under test that could cause false readings or be damaged by the test voltage.

Carry out the insulation test in accordance with the 'operating instructions for the test equipment.

The measured value of insulation resistance for all windings to earth and phase to phase should be compared with the guidance given above for the various 'life stages' of a generator. The minimum acceptable value must be greater than 1.0 MΩ.

If low winding insulation is confirmed use one or more of the methods, given below, for drying the winding should be carried out.

7.1.2 METHODS OF DRYING OUT GENERATORS

Cold Run

Consider a good condition generator that has not been run for some time, and has been standing in damp, humid conditions. It is possible that simply running the gen set unexcited - AVR terminals K1 K2 open circuit - for a period of say 10 minutes will sufficiently dry the surface of the windings and raise the IR sufficiently, to greater than 1.0 MΩ , and so allow the unit to be put into service.

Blown Air Drying

Remove the covers from all apertures to allow the escape of the water-laden air. During drying, air must be able to flow freely through the generator in order to carry off the moisture.

Direct hot air from two electrical fan heaters of around 1 – 3 kW into the generator air inlet apertures. Ensure the heat source is at least 300mm away from the windings to avoid over heating and damage to the insulation.

Apply the heat and plot the insulation value at half hourly intervals. The process is complete when the parameters covered in the section entitled, 'Typical Drying Out Curve', are met.

Remove the heaters, replace all covers and re-commission as appropriate.

If the set is not to be run immediately ensure that the anti-condensation heaters are energised, and retest prior to running.

Short Circuit Method

NOTE: This process should only be performed by a competent engineer familiar with safe operating practices within and around generator sets of the type in question.

Ensure the generator is safe to work on, initiate all mechanical and electrical safety procedures pertaining to the genset and the site.

Bolt a short circuit of adequate current carrying capacity, across the main terminals of the generator. The shorting link should be capable of taking full load current.

Disconnect the cables from terminals "X" and "XX" of the AVR.

Connect a variable dc supply to the "X" (positive) and "XX" (negative) field cables. The dc supply must be able to provide a current up to 2.0 Amp. at 0 - 24 Volts.

Position a suitable ac ammeter to measure the shorting link current.

Set the dc supply voltage to zero and start the generating set. Slowly increase the dc voltage to pass current through the exciter field winding. As the excitation current increases, so the stator current in the shorting link will increase. This stator output current level must be monitored, and not allowed to exceed 80% of the generators rated output current.

After every 30 minutes of this exercise:
Stop the generator and switch off the separate excitation supply, and measure and record the stator winding IR values, and plot the results. The resulting graph should be compared with the classic shaped graph. This drying out procedure is complete when the parameters covered in the section entitled 'Typical Drying Out Curve' are met.

Once the Insulation Resistance is raised to an acceptable level - minimum value 1.0 MΩ – the dc supply may be removed and the exciter field leads "X" and "XX" re-connected to their terminals on the AVR.

Rebuild the genset, replace all covers and re-commission as appropriate.

If the set is not to be run immediately ensure that the anti-condensation heaters are energised, and retest the generator prior to running.

TYPICAL DRYING OUT CURVE

Whichever method is used to dry out the generator the resistance should be measured every half-hour and a curve plotted as shown. (fig 6.)

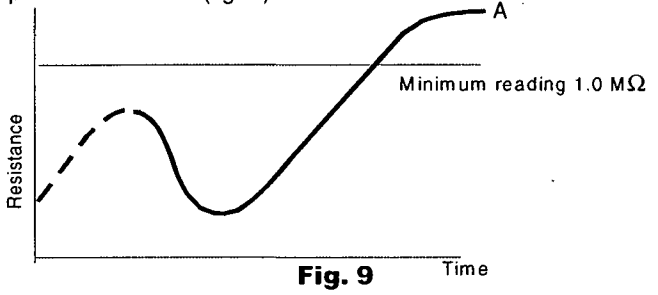

Fig. 9

The illustration shows a typical curve for a machine that has absorbed a considerable amount of moisture. The curve indicates a temporary increase in resistance, a fall and then a gradual rise to a steady state. Point 'A', the steady state, must be greater than 1.0 MΩ. (If the windings are only slightly damp the dotted portion of the curve may not appear).

For general guidance expect that the typical time to reach point 'A' will be:

1 hour for a BC16/18,
2 hours for a UC22/27
3 hours for an HC4,5,6&7

Drying should be continued after point "A" has been reached for at least one hour.

It should be noted that as winding temperature increases, values of insulation resistance may significantly reduce. Therefore, the reference values for insulation resistance can only be established with windings at a temperature of approximately 20°C.

If the IR value remains below 1.0 MΩ, even after the above drying methods have been properly conducted, then a Polarisation Index test [PI] should be carried out.

If the minimum value of 1.0 MΩ for all components cannot be achieved rewinding or refurbishment of the generator will be necessary.

The generator must not be put into service until the minimum values can be achieved.

Important ! The short circuit must not be applied with the AVR connected in circuit. Current in excess of the rated generator current will cause damage to the windings.

After drying out, the insulation resistances should be rechecked to verify minimum resistances quoted above are achieved.
On re-testing it is recommended that the main stator insulation resistance is checked as follows:-
Separate the neutral leads

Ground	V and W	phase and megger	U phase to ground
Ground	U and W	phase and megger	V phase to ground
Ground	U and V	phase and megger	W phase to ground

If the minimum value of 1.0MΩ is not obtained, drying out must be continued and the test repeated.

7.2 BEARINGS

One of two bearing options will be fitted to generators covered by this manual.

Bearing Options		
HC/HCK/HCM	**Regreasable***	**Sealed for life*†**
4	Not available	Standard
5	Optional	Standard
6	Optional	Standard
7	Standard	Not available

Table 5

*All bearings are supplied pre-packed with Kluber Asonic GHY 72 grease.
†Sealed for life bearings are fitted with integral seals and are not regreasable.

BEARING LIFE

Important ! The life of a bearing in service is subject to the working conditions and the environment.

Important ! High levels of vibration from the engine or misalignment of the set will stress the bearing and reduce its service life. If the vibration limits set out in BS 5000-3 and ISO 8528-9 are exceeded bearing life will be reduced. Refer to 'Vibration' below.

Important ! Long stationary periods in an environment where the generator is subject to vibration can cause false brinnelling, which puts flats on the ball and grooves on the races, leading to premature failure.

Important ! **Very humid atmospheric or wet conditions can emulsify the grease causing corrosion and deterioration of the grease, leading to premature failure of the bearings.**

HEALTH MONITORING OF THE BEARINGS

Newage recommends that the user checks the bearing condition, using monitoring equipment, to determine the state of the bearings. The 'best practice' is to take initial readings as a base line and periodically monitor the bearings to detect a deteriorating trend. It will then be possible to plan a bearing change at an appropriate generating set or engine service interval.

VIBRATION

Newage generators are designed to withstand the vibration levels encountered on generating sets built to meet the requirements of ISO 8528-9 and BS5000-3. (Where ISO 8528 is taken to be broad band measurements and BS5000 refers to the predominant frequency of any vibrations on the generating set.)

DEFINITION of BS5000 - 3

Generators shall be capable of continuously withstanding linear vibration levels with amplitudes of 0.25mm between 5Hz and 8Hz and velocities of 9.0mm/s rms between 8 Hz and 200 Hz when measured at any point directly on the carcass or main frame of the machine. These limits refer only to the predominant frequency of vibration of any complex waveform.

DEFINITION of ISO 8528 - 9

ISO 8528-9 refers to a broad band of frequencies, the broad band is taken to be between 2 Hertz and 300 Hertz. The table below is an example from ISO 8528 - 9 (value 1). This simplified table lists the vibration limits by kVA range and speed for acceptable genset operation.

VIBRATION LEVELS AS MEASURED ON THE GENERATOR				
Engine Speed Min $^{-1}$	SET OUTPUT kVA	VIBRATION DISPLACEMENT mm (rms)	VIBRATION VELOCITY mm/s (rms)	VIBRATION ACCELERATION m/s^2 (rms)
4 POLE 1500 rpm 50 Hz 1800 rpm 60 HZ	≤ 10 kVA	-	-	-
	> 10 but ≤ 50 Kva	0.64	40	25
	> 50 but ≤ 125 kVA	0.4	25	16
	> 125 but ≤ 250 kVA	0.4	25	16
	> 250 kVA	0.32	20	13
6 POLE 1000 rpm 50 Hz 1200 rpm 60 Hz	≥ 250 but ≤ 1250	0.32	20	13
	> 1250	0.29	18	11
The 'Broad band' is taken as 2 Hz - 300 Hz.				

Table 6

Important ! **Exceeding either of the above specifications will have a detrimental effect on the life of the bearing. This will invalidate the generator warranty. If you are in any doubt, contact Newage International Limited.**

If the vibration levels of the generating set are not within the parameters quoted above :-

1. Consult the genset builder. The genset builder should address the genset design to reduce the vibration levels as much as possible.

2. Discuss, with Newage, the impact of not meeting the above levels on both bearing and generator life expectancy.

Where requested, or deemed necessary, Newage will work with the genset builder in an attempt to find a satisfactory solution.

BEARING 'SERVICE LIFE' EXPECTANCY

Bearing manufacturers recognise that the "service life" of their bearings is dependent upon many factors that are not in their control, they cannot therefore quote a "service life".

Although "service life" cannot be guaranteed, it can be maximised by attention to the generating set design. An understanding of the genset application will also help the user to maximise the service life expectancy of the bearings. Particular attention should be paid to the alignment, reduction of vibration levels, environmental protection, maintenance and monitoring procedures.

Newage does not quote life expectancy figures for bearings, but suggests practicable replacement intervals based on the L10 life of the bearing, the grease and the recommendations of the bearing and grease manufacturers.

For general-purpose applications, providing the vibration levels do not exceed the levels stated in ISO 8528-9* and BS5000-3* and the ambient temperature does not exceed 50°C the following approximations can be applied when planning bearing replacements.
*(see section on vibration)

Sealed for Life Bearings. - Approximately 30,000 hours.

Re-greaseable bearings. - Approximately 40,000 hours.

(Provided the correct maintenance is carried out, and only Kluber Asonic GHY 72 grease is used in all bearings.)

It is important to note that bearings in service, under good operating conditions, can continue to run beyond the recommended replacement period. It should also be remembered that the risk of bearing failure increases with time.

If in doubt about any aspect of the 'bearing life' on generators supplied by Newage International, contact your nearest Newage subsidiary or contact the Stamford factory direct.

See the back cover for addresses.

7.3 AIR FILTERS

Air filters for the removal of airbourne particulate matter (dust) are offered as an addition to the standard build option. Filters on Frame 6 and 7 need to be ordered with the generator but Frame 4 and 5 can have air filters fitted after the generator is built.

Air filters need to be changed with oil before the gen set is put to work (see 7.3.1).

The frequency of filter maintenance will depend upon the severity of the site conditions. Regular inspection of the elements will be required to establish when cleaning is necessary.

Danger!

Removal of filter elements enables access to LIVE parts.
Only remove elements with the generator out of service.

7.3.1 CLEANING PROCEDURE

Remove the filter elements from the filter frames. Immerse or flush the element with a suitable degreasing agent until the element is clean.

As an alternative procedure a high pressure water hose with a flat nozzle can be used. Sweep the water spray back and forth across the element from the clean side (fine mesh side of element) holding the nozzle firmly against the element surface. Cold water may be adequate depending upon type of contamination although hot water is preferable.

The element can be inspected for cleanliness by looking through the filter towards the light.

When thoroughly clean, no cloudy areas will be seen. Dry elements thoroughly before attempting to carry out the recharging procedure.

7.3.2 RECHARGING (CHARGING)

Charging is best done by totally immersing the dry element into a dip tank containing "Filterkote Type K" or commercial lubricating oil SAE 20/50. Oils of higher or lower viscosity are not recommended.

Allow elements to completely drain before refitting the elements into the frames and putting into service.

7.4 FAULT FINDING

Important ! Before commencing any fault finding procedures examine all wiring for broken or loose connections.

Four types of excitation control system, involving four types of AVR, can be fitted to the range of generators covered by this manual. The systems can be identified by a combination of AVR type, where applicable, and the last digit of the generator frame size designation. Refer to the generator nameplate then proceed to the appropriate subsection as indicated below:-

DIGIT	EXCITATION CONTROL	SUBSECTION
4	SX440 AVR	7.4.1
4	SX421 AVR	7.4.2
3	MX341 AVR	7.4.3
3	MX321 AVR	7.4.4

7.4.1 SX440 AVR - FAULT FINDING

No voltage build-up when starting set	1. Check link K1-K2. 2. Check speed. 3. Check residual voltage. Refer to subsection 7.4.5. 4. Follow separate excitation test procedure to check generator and AVR. Refer to subsection 7.5.
Unstable voltage either on no-load or with load	1. Check speed stability. 2. Check stability setting. Refer to subsection 4.6.
High voltage either on no-load or with load	1. Check speed. 2. Check that generator load is not capacitive (leading power factor).
Low voltage no-load	1. Check speed. 2. Check link 1-2 or external hand trimmer leads for continuity.
Low voltage on-load	1. Check speed. 2. Check UFRO setting. Refer to subsection 4.7.1.1. 3. Follow separate excitation procedure to check generator and AVR. Refer to subsection 7.5.

Table 7

7.4.2 SX421 AVR - FAULT FINDING

No voltage build-up when starting set	1. Check circuit breaker ON. Refer to subsection 6.4.1. 2. Check speed. 3. Check residual voltage. Refer to subsection 7.4.5. 4. Follow separate excitation test procedure to check generator and AVR. Refer to subsection 7.5.
Unstable voltage either on no-load or with load	1. Check speed stability. 2. Check stability setting. Refer to subsection 4.6.
High voltage either on no-load or with load	1. Check speed. 2. Check link 1-2 or external hand trimmer leads for continuity. Check continuity of leads 7-8 and P3-P2 for continuity. 3. Check that generator load is not capacitive (leading power factor).
Low voltage no-load	1. Check speed. 2. Check link 1-2 or external hand trimmer leads for continuity.
Low voltage on-load	1. Check speed. 2. Check UFRO setting. Refer to subsection 4.7.1.1. 3. Follow separate excitation procedure to check generator and AVR. Refer to subsection 7.5.
Excessive voltage/speed dip on load switching	1. Check governor response. 2. Refer to generating set manual. Check 'DIP' setting. Refer to subsection 4.7.1.4.

Table 8

7.4.3 MX341 AVR - FAULT FINDING

No voltage build-up when starting set	1. Check link K1-K2 on auxiliary terminals. 2. Follow Separate Excitation Test Procedure to check machine and AVR. Refer to subsection 7.5.
Loss of voltage when set running	1. First stop and re-start set. If no voltage or voltage collapses after short time, follow Separate Excitation Test Procedure. Refer to subsection 7.5.
Generator voltage high followed by collapse	1. Check sensing leads to AVR. 2. Refer to Separate Excitation Test Procedure. Refer to subsection 7.5.
Voltage unstable, either on no-load or with load	1. Check speed stability. 2. Check "STAB" setting. Refer to Load Testing section for procedure. Refer to subsection 4.6.
Low voltage on-load	1. Check speed. 2. If correct check "UFRO" setting. Refer to subsection 4.7.1.1.
Excessive voltage/speed dip on load switching	1. Check governor response. Refer to generating set manual. Check "DIP" setting. Refer to subsection 4.7.1.4.
Sluggish recovery on load switching	1. Check governor response. Refer to generating set manual.

Table 9

7.4.4 MX321 AVR - FAULT FINDING

No voltage build-up when starting set	1. Check link K1-K2 on auxiliary terminals. Follow Separate Excitation Test Procedure to check machine and AVR. Refer to subsection 7.5.
Voltage very slow to build up	1. Check setting of ramp potentiometer. Refer to 4.7.1.5
Loss of voltage when set running	1. First stop and re-start set. If no voltage or voltage collapses after short time, follow Separate Excitation Test Procedure. Refer to subsection 7.5.
Generator voltage high followed by collapse	1. Check sensing leads to AVR. 2. Refer to Separate Excitation Test Procedure. Refer to subsection 7.5.
Voltage unstable, either on no-load or with load	1. Check speed stability. 2. Check "STAB" setting. Refer to Load Testing section for procedure. Refer to subsection 4.6.
Low voltage on-load	1. Check speed. 2. If correct check "UFRO" setting. Refer to subsection 4.7.1.1.
Excessive voltage/speed dip on load switching	1. Check governor response. Refer to generating set manual. Check "DIP" setting. Refer to subsection 4.7.1.4.
Sluggish recovery on load switching	1. Check governor response. Refer to generating set manual. Check "DWELL" setting. Refer to Load Testing section 4.7.1.4.

Table 10

7.4.5 RESIDUAL VOLTAGE CHECK

This procedure is applicable to generators with either SX460 or SX440 or SX421 AVR.

With the generator set stationary remove AVR access cover and disconnect leads X and XX from the AVR.

Start the set and measure voltage across AVR terminals P2-P3 on SX440 or SX421 AVR.

Stop the set, and replace leads X and XX on the AVR terminals.If the measured voltage was above 5V the generator should operate normally.

If the measured voltage was under 5V follow the procedure below.

7.4.6 'REFLASHING' TO RESTORE RESIDUAL

Using a 12 volt dc battery as a supply clip leads from battery negative to AVR terminal XX, and from battery positive through a diode to AVR terminal X. See Fig. 7.

Important ! A diode must be used as shown below to ensure the AVR is not damaged.

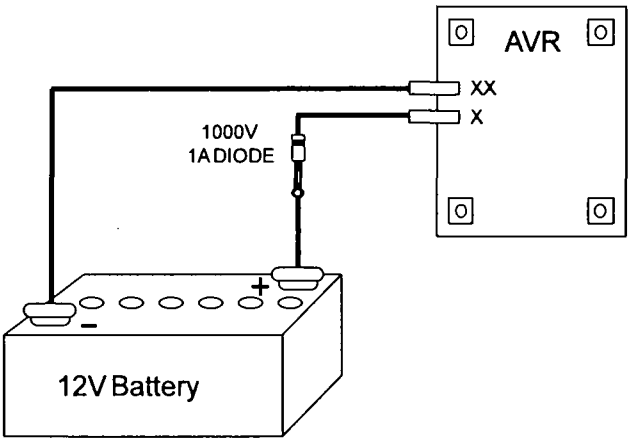

Fig. 7

Important ! If the generating set battery is used for field flashing, the generator main stator neutral must be disconnected from earth.

Restart the set and note output voltage from main stator, which should be approximately nominal voltage, or voltage at AVR terminals P2-P3 on SX440 or SX421 which should be between 170 and 250 volts.

Stop the set and unclip battery supply from terminals X and XX. Restart the set. The generator should now operate normally. If no voltage build-up is obtained it can be assumed a fault exists in either the generator or the AVR circuits. Follow the SEPARATE EXCITATION TEST PROCEDURE to check generator windings, rotating diodes and AVR. Refer to subsection 7.5.

7.5 SEPARATE EXCITATION TEST PROCEDURE

The generator windings, diode assembly and AVR can be checked using the appropriate following section.

7.5.1 GENERATOR WINDINGS, ROTATING DIODES and PERMANENT MAGNET GENERATOR (PMG)

7.5.2 EXCITATION CONTROL TEST.

7.5.1 GENERATOR WINDINGS, ROTATING DIODES and PERMANENT MAGNET GENERATOR (PMG)

Important ! **The resistances quoted apply to a standard winding. For generators having windings or voltages other than those specified refer to factory for details. Ensure all disconnected leads are isolated and free from earth.**

Important ! **Incorrect speed setting will give proportional error in voltage output.**

CHECKING PMG

Start the set and run at rated speed.

Measure the voltages at the AVR terminals P2, P3 and P4. These should be balanced and within the following ranges:-

50Hz generators - 170-180 volts
60Hz generators - 200-216 volts

Should the voltages be unbalanced stop the set, remove the PMG sheet metal cover from the non drive endbracket and disconnect the multipin plug in the PMG output leads. Check leads P2, P3, P4 for continuity. Check the PMG stator resistances between output leads. These should be balanced and within
+/-10% of 2.3 ohms. If resistances are unbalanced and/or incorrect the PMG stator must be replaced. If the voltages are balanced but low and the PMG stator winding resistances are correct - the PMG rotor must be replaced.

CHECKING GENERATOR WINDINGS AND ROTATING DIODES

This procedure is carried out with leads X and XX disconnected at the AVR or transformer control rectifier bridge and using a 12 volt d.c. supply to leads X and XX.

Start the set and run at rated speed.

Measure the voltages at the main output terminals U, V and W. If voltages are balanced and within +/-10% of the generator nominal voltage, refer to 7.5.1.1.

Check voltages at AVR terminals 6, 7 and 8. These should be balanced and between 170-250 volts.

If voltages at main terminals are balanced but voltage at 6, 7 and 8 are unbalanced, check continuity of leads 6, 7 and 8. Where an isolating transformer is fitted (MX321 AVR) check transformer windings. If faulty the transformer unit must be replaced.

If voltages are unbalanced, refer to 7.5.1.2.

7.5.1.1 BALANCED MAIN TERMINAL VOLTAGES

If all voltages are balanced within 1% at the main terminals, it can be assumed that all exciter windings, main windings and main rotating diodes are in good order, and the fault is in the AVR or transformer control. Refer to subsection 7.5.2 for test procedure.
If voltages are balanced but low, there is a fault in the main excitation windings or rotating diode assembly. Proceed as follows to identify:-

Rectifier Diodes

The diodes on the main rectifier assembly can be checked with a multimeter. The flexible leads connected to each diode should be disconnected at the terminal end, and the forward and reverse resistance checked. A healthy diode will indicate a very high resistance (infinity) in the reverse direction, and a low resistance in the forward direction. A faulty diode will give a full deflection reading in both directions with the test meter on the 10,000 ohms scale, or an infinity reading in both directions.
On an electronic digital meter a healthy diode will give a low reading in one direction, and a high reading in the other.

Replacement of Faulty Diodes

The rectifier assembly is split into two plates, the positive and negative, and the main rotor is connected across these plates. Each plate carries 3 diodes, the negative plate carrying negative biased diodes and the positive plate carrying positive biased diodes. Care must be taken to ensure that the correct polarity diodes are fitted to each respective plate. When fitting the diodes to the plates they must be tight enough to ensure a good mechanical and electrical contact, but should not be overtightened. The recommended torque tightening is 4.06 - 4.74Nm (36-42lb in).

Surge Suppressor

The surge suppressor is a metal-oxide varistor connected across the two rectifier plates to prevent high transient reverse voltages in the field winding from damaging the diodes. This device is not polarised and will show a virtually infinite reading in both directions with an ordinary resistance meter. If defective this will be visible by inspection, since it will normally fail to short circuit and show signs of disintegration. Replace if faulty.

Main Excitation Windings

If after establishing and correcting any fault on the rectifier assembly the output is still low when separately excited, then the main rotor, exciter stator and exciter rotor winding resistances should be checked (see Resistance Charts), as the fault must be in one of these windings. The exciter stator resistance is measured across leads X and XX. The exciter rotor is connected to six studs which also carry the diode lead terminals. The main rotor winding is connected across the two rectifier plates. The respective leads must be disconnected before taking the readings.

Resistance values should be within +/-10% of the values given in the tables below:-

4 POLE GENERATORS			
FRAME SIZE	MAIN ROTOR	EXCITER STATOR	EXCITER ROTOR
4 - 4C	0.91	18	0.136
4 - 4D	1.04	18	0.136
4 - 4E	1.17	18	0.136
4 - 4F	1.35	18	0.136
5 - 4C	1.55	17	0.184
5 - 4D	1.77	17	0.184
5 - 4E	1.96	17	0.184
5 - 4F	2.16	17	0.184
6 - 4G	1.75	17	0.158
6 - 4H	1.88	17	0.158
6 - 4J	2.09	17	0.158
6 - 4K	2.36	17	0.158
7 - 4E	1.27	17	0.096
7 - 4F	1.41	17	0.096
7 - 4G	1.65	17	0.096
7 - 4H	1.77	17	0.096

Table 11

6 POLE GENERATORS			
FRAME SIZE	MAIN ROTOR	EXCITER STATOR	EXCITER ROTOR
6 - 6G	1.12	17	0.2
6 - 6H	1.33	17	0.2
6 - 6J	1.5	17	0.2
6 - 6K	1.75	17	0.2
7 - 6E	2.33	17	0.2
7 - 6F	2.83	17	0.2
7 - 6G	3.25	20	0.28

Table 12

7.5.1.2 UNBALANCED MAIN TERMINAL VOLTAGES

If voltages are unbalanced, this indicates a fault on the main stator winding or main cables to the circuit breaker. NOTE: Faults on the stator winding or cables may also cause noticeable load increase on the engine when excitation is applied. Disconnect the main cables and separate the winding leads U1-U2, (U5-U6), V1-V2, (V5-V6), W1-W2, (W5-W6) to isolate each winding section.

Note:- leads suffixed 5 and 6 apply to 12 wire windings only.

Measure each section resistance - values should be balanced and within +/-10% of the value given below:-

MAIN STATOR SECTION RESISTANCES				
4 POLE GENERATORS				
SECTION RESISTANCES				
FRAME SIZE	WINDING 311 1-2 OR 5-6	WINDING 12 1-2	WINDING 17 1-2 OR 5-6	WINDING 07 1-2
4 - 4C	0.0085	N/A	0.0115	N/A
4 - 4D	0.006	N/A	0.01	N/A
4 - 4E	0.0045	N/A	0.0075	N/A
4 - 4F	0.0037	N/A	0.0055	N/A
5 - 4C	0.0032	N/A	0.0053	N/A
5 - 4D	0.0024	N/A	0.004	N/A
5 - 4E	0.0022	N/A	0.0034	N/A
5 - 4F	0.0019	N/A	0.0025	N/A
6 - 4G	0.0017	0.0034	N/A	0.0055
6 - 4H	0.0013	0.0025	N/A	0.0036
6 - 4J	0.0011	0.0022	N/A	0.003
6 - 4K	0.0085	0.0017	N/A	0.0026
7 - 4E	N/A	0.0016	N/A	0.0026
7 - 4F	N/A	0.0013	N/A	0.002
7 - 4G	N/A	0.0009	N/A	0.0015
7 - 4H	N/A	0.0008	N/A	0.0011

Table 13

6 POLE GENERATORS				
SECTION RESISTANCES				
FRAME SIZE	WINDING 311 1-2 OR 5-6	WINDING 12 1-2	WINDING 17	WINDING 07 1-2
6 - 6G	0.0045	0.009	N/A	0.015
6 - 6H	0.0032	0.0063	N/A	0.01
6 - 6J	N/A	0.0049	N/A	0.007
6 - 6K	0.002	0.0039	N/A	0.006
7 - 6E	N/A	0.0027	N/A	0.0042
7 - 6F	N/A	0.0018	N/A	0.0032
7 - 6G	N/A	0.0014	N/A	0.002

Table 14

Measure insulation resistance between sections and each section to earth.

Unbalanced or incorrect winding resistances and/or low insulation resistances to earth indicate rewinding of the stator will be necessary. Refer to removal and replacement of component assemblies subsection 7.5.3.

7.5.2 EXCITATION CONTROL TEST

'.5.2.1 AVR FUNCTION TEST

All types of AVR's can be tested with this procedure:

1. Remove exciter field leads X & XX (F1 & F2) from the AVR terminals X & XX (F1 & F2).
2. Connect a 60W 240V household lamp to AVR terminals X & XX (F1 & F2).
3. Set the AVR VOLTS control potentiometer fully clockwise.
4. Connect a 12V, 1.0A DC supply to the exciter field leads X & XX (F1 & F2) with X (F1) to the positive.
5. Start the generating set and run at rated speed.
6. Check that the generator output voltage is within +/- 10% of rated voltage.

Voltages at AVR terminals 7-8 on SX460 AVR or P2-P3 on SX440 or SX421 AVR should be between 170 and 250 volts. If the generator output voltage is correct but the voltage on 7-8 (or P2-P3) is low, check auxiliary leads and connections to main 'erminals.

/oltages at P2, P3, P4 terminals on MX341 and MX321 should be as given in 7.5.1.

The lamp connected across X-XX should glow. In the case of the SX460, SX440 and SX421 AVRs the lamp should glow continuously. In the case of the MX341 and MX321 AVRs the lamp should glow for approximately 8 secs. and then turn off. Failure to turn off indicates faulty protection circuit and the AVR should be replaced. Turning the "VOLTS" control potentiometer fully anti-clockwise should turn off the lamp with all AVR types.

Should the lamp fail to light the AVR is faulty and should be replaced.

Important ! **After this test turn VOLTS control potentiometer fully anti-clockwise.**

7.5.3 REMOVAL AND REPLACEMENT OF COMPONENT ASSEMBLIES

METRIC THREADS ARE USED THROUGHOUT

Caution! **When lifting single bearing generators, care is needed to ensure the generator frame is kept in the horizontal plane. The rotor is free to move in the frame and can slide out if not correctly lifted. Incorrect lifting can cause serious injury to personnel.**

7.5.3.1 ANTI-CONDENSATION HEATERS

Danger !

The external mains electricity supply used to power the anti-condensation heater must be switched off and safely isolated before attempting any work adjacent to the heater, or removal of the non drive end endbracket on which the anti-con heater is mounted. Ensure that the engine is inhibited prior to work in generator.

7.5.3.2 REMOVAL OF PERMANENT MAGNET GENERATOR (PMG)

1. Remove access cover.
2. Disconnect P2, P3, P4 at the multiway connector inside the access cover.
3. Remove the 4 screws and clamps retaining the stator housing (Frames 4, 5 and 6) or the stator pack (Frame 7).
4. Tap the stator pack or housing out of its spigot.

NOTE:
As the highly magnetic rotor will attract the stator core, care must be taken to avoid a contact which may damage the winding.

5. Remove the exciter rotor securing bolt and stow safely and firmly pull the complete rotor assembly from its location.

N.B. Keep the rotor clean and avoid contact with metal dust or particles - preferably place in plastic bag.

Important ! **The rotor assembly must not be dismantled.**

Re-assembly is a reversal of the above procedure having due regard for the notes below:-

1. Ensure rotor magnet assembly is free of metal pieces or particles.
2. Care is needed to avoid winding damage when re-assembling the stator pack, due to strong magnetic attraction.

7.5.3.3 REMOVAL OF BEARINGS

Important ! **Position the main rotor so that a full pole face of the main rotor core is at the bottom Remove PMG of the stator bore if fitted.**

The generators in this manual will be fitted with one of three different bearing arrangements. There may be two different arrangements on a two-bearing generator. (See table 14 & 15)

BEARING OPTIONS FOR DRIVE-END BEARINGS				
	HC4	HC5	HC6	HC7
Reagreasable bearings	N/A	OPT	OPT	STD
Sealed for life with a cartridge	STD	STD	STD	N/A
Sealed for life without cartridge	N/A	N/A	N/A	N/A

Table 15

BEARING OPTIONS FOR NON DRIVE-END BEARINGS				
	HC4	HC5	HC6	HC7
Reagreasable bearings	N/A	OPT	OPT	STD
Sealed for life with a cartridge	NA	NA	STD	N/A
Sealed for life without cartridge	STD	STD	N/A	N/A

Table 16

Removal of the bearings may be effected either after the rotor assembly has been removed or more simply by removal of endbracket(s).

Be sure to note the location of all components during removal to assist during the assembly process.

BEARING REPLACEMENT

Environment

Every effort must be made to establish a clean area around the generator when removing and replacing bearings. Contamination is a major cause of bearing failures.

Equipment

Suitable cleaning solvent
Bearing puller, two or three leg
Thin protective gloves
Lint free cleaning cloth
Induction heater.

Preparation

Remove PMG if fitted
Remove the lubrication pipework if fitted
Position the rotor so that the full pole face of the main rotor is at the bottom of the stator bore.
Remove the end bracket, see 7.5.3.4 for procedure.

NOTES:

- It is not necessary to remove the rotor.
- Ensure that the bearing contact surfaces shows no sign of wear or corrosion prior to fitting the bearing.
- Never refit used bearings, wave washers or 'O'rings.
- Never refit used bearings, grease flingers, wave washer or 'O' rings.
- Only the outer race should be used to transmit load during assembly (NEVER use the inner race).

REMOVAL OF REGREASABLE BEARINGS

The bearings are a press fit on the shaft and can be removed with standard tooling, i.e. 2 or 3 legged manual or hydraulic bearing pullers.

To remove bearings proceed as follows:

1. Remove 4 screws holding bearing cap.
2. Remove cap.
3. Non drive end - remove wave washer and circlip (single bearing only).
4. Remove bearing cartridge housing complete with bearing (and grease flinger if fitted).
5. Remove bearing from cartridge.
6. Discard the old bearing 'O' rings and wave washer where fitted.

The bearing cap(s) and cartridge(s) must be thoroughly flushed out with clean solvent and checked for wear or damage, before re-assembly. Damaged components should be replaced before refitting the bearing.

ASSEMBLY OF REGREASABLE BEARINGS

NOTE: Gloves must be worn at all times when handling the bearings, grease and solvent.

1. Wipe clean the assembly surface, using cleaning solvent on lint free cloth.
2. Wipe clean: Bearing Cartridge, Wave Washer, Bearing Cap, grease flinger, all re-lubrication pipes and fittings (internal and external). Visually inspect all components after cleaning, for contamination.
3. Place all components on the clean assembly surface. Do not use an air line to blow off excess fluid.
4. Thoroughly clean the external surface of the grease gun nozzle using lint free cloth.

Bearing preparation

1. Remove the bearing from its packaging.
2. Wipe off the preservative oil from the surface of the inner and outer rings - using lint free cloth only.
3. Place the bearing on the clean assembly surface, with the bearing designation marking facing down.

Bearing Assembly (Lubrication, see TABLE 17)

Cartridge:

1. Apply the specified cartridge grease fill quantity to the back face of the bearing housing.
2. Apply a small amount of grease to the grooved sealing surface in the cartridge.
3. Apply anti-fretting lubricant (MP14002 - Klüber Altemp Q NB 50) to the bearing housing circumference. Apply paste in a thin coherent layer by use of a lint free cloth (DO NOT rub in) (use clean protective gloves).
4. Non-drive end - fit new 'O' Rings into the 'O' Ring grooves in the bearing housing circumference.

Bearing:

1. Apply half the specified bearing grease fill quantity (see table 16) to the upper face of the bearing (opposite side to the bearing designation markings).
2. Thumb the applied grease into the bearing, ensuring good penetration into the raceways/balls (use clean protective gloves).

Assemble Bearing into Cartridge

1. Heat the bearing cartridge to 25° C above ambient with an induction heater (Do not exceed 100°C).
2. With greased face of the bearing facing the cartridge bore, assemble the bearing into the bearing housing. Ensure the bearing outer race contacts the location shoulder.

Assemble Bearing onto Shaft

Bearing Cartridge

1. Heat the Bearing and Cartridge assembly to 80°C above ambient with an induction heater. (use induction heater, no other heat source is suitable)

2. Slide the Bearing and Cartridge assembly over the shaft, pushing it firmly against the bearing seating shoulder.

3. Rotate the assembly (including inner race) 45° in either direction, to provide correct alignment. The bearing must be held firmly in place until it is cool enough to positively self locate.

NOTE: Ensure cartridge is at ambient temp. before assembling bracket.

Cap/Flinger:

Apply the specified cap grease fill quantity to the inside face of the cap (see table 16).

1. Fill the grease exhaust slot with grease.

2. Apply a small amount of grease to the grooved sealing surface in the cap.

3. Fit circlip. (single bearing only).

4. Heat flinger to 120°C and place on shaft up to the bearing inner race. Hold firmly until positively located.

5. Place wave washer in cap, fit cap to bearing cartridge.

Re-lubrication pipe:

1. Fill pipe and grease nipple with grease.

2. Fit pipe work to machine.

INITIAL LUBRICATION DETAILS, REGREASEABLE BEARINGS							
FRAME	BEARING POSITION	GREASE QUANTITY					
		BEARINGS		CARTRIDGE		CAP	
		CM³	GRAMS	CM³	GRAMS	CM³	GRAMS
5	Non-Drive End	65	58	33	29	33	29
5	Drive End	92	82	46	41	46	41
6	Non-Drive End	121	111	63	56	63	56
6	Drive End	156	139	78	69	78	69
7	Non-Drive End	174	154	87	77	87	77
7	Drive End	208	185	104	92	104	92

Lubricant: Kluber Asonic GHY 72

Table 17

REMOVAL OF GREASED FOR LIFE BEARINGS WITH BEARING CARTRIDGE

The bearings are a press fit on the shaft and can be removed with standard tooling, i.e. 2 or 3 legged manual or hydraulic bearing pullers.

To remove bearings proceed as follows:

1. Remove 4 screws holding bearing cap.

2. Remove cap.

3. Non drive end - remove wave washer and circlip (single bearing only).

4. Remove bearing cartridge housing complete with bearing.

5. Remove bearing from cartridge.

6. Discard the old bearing, 'o' rings and wave washer where fitted.

The bearing cap(s) and cartridge(s) must be thoroughly flushed out with clean solvent and checked for wear or damage, before re-assembly. Damaged components should be replaced before refitting the bearing.

ASSEMBLY OF SEALED FOR LIFE BEARINGS WITH CARTRIDGE

Pre-assembly cleaning.

NOTE: Gloves must be worn at all times when handling the bearings, grease and solvent.

1. Wipe clean the assembly surface, using cleaning solvent on lint free cloth.

2. Wipe clean: Bearing Cartridge and Bearing Cap (internal and external). Visually inspect all components after cleaning, for contamination.

3. Place all components on a clean assembly surface. Do not use an air line to blow off excess fluid.

4. Thoroughly clean the external surface of the grease gun nozzle using lint free cloth.

Bearing preparation:

1. Remove the bearing from its packaging.

2. Wipe off the preservative oil from the surface of the inner and outer rings - using lint free cloth only.

3. Place the bearing on the clean assembly surface, with the bearing designation marking facing down.

Bearing Assembly

Cartridge:

1. Apply anti-fretting lubricant (**MP14002 - Klüber Altemp Q NB 50**) to the bearing housing circumference. Apply paste in a thin coherent layer by use of a lint free cloth (**DO NOT rub in**) (use clean protective gloves).

2. Fit 'O' Rings into the 'O' Ring grooves in the bearing housing circumference.

Assemble Bearing into Cartridge

1. Heat the bearing cartridge to 25° C above the ambient temperature (with an induction heater, do not exceed 100°C) and assemble the new bearing into the cartridge. Ensure that the bearing designation is visible after assembly.

2. With greased face of the bearing facing the cartridge bore, assemble the bearing into the bearing housing. Ensure the bearing outer race contacts the location shoulder.

NOTE: Only the outer race should be used to transmit load during assembly (NEVER use the inner race).

Assemble Bearing and Cartridge onto the Shaft

1. Heat the Bearing and Cartridge assembly to 80°C above ambient.
   (use induction heater, no other heat source is suitable)

2. Slide the Bearing and Cartridge assembly over the shaft, pushing it firmly against the bearing seating shoulder.

3. Rotate the assembly (including inner race) 45° in either direction, to provide correct alignment. The bearing must be held firmly in place until it is cool enough to positively self locate.

4. Non drive end only - fit circlip (single bearing only) and wave washer.

5. Fit the bearing cap.

6. Rotate the bearing assembly on the shaft to check for free movement.

Note: Ensure cartridge is at ambient temp. before assembling bracket.

7. Refit the end bracket and PMG where fitted.

SEALED FOR LIFE BEARINGS (WITHOUT CARTRIDGE)

NOTE: Prior to commencement of removal of end bracket ensure rotor is positioned with full pole face at the bottom of the stator bore.

Preparation

1. Remove terminal box lid.

2. Cut cable ties and disconnect exciter leads.

3. Remove bolts from NDE terminal panel and place panel over terminal board with AVR still connected.

4. Remove Permanent Magnet Generator (if fitted) see 7.5.3.2.

5. Remove the rotor retaining circlip (Non drive end - single bearing only) and slack off remaining NDE bracket bolts.

6. Fit 2 off M10x60mm bolts into jacking locations on centre line and replace 2 bolts into end bracket for support as end bracket is removed (be aware of exciter lead and PMG lead, if fitted).

7. If altemator not connected to engine be aware of rotor pulling through stator, to avoid this, place wooden spacer between fan and frame each side at drive end.

8. Use available lifting equipment to remove the bracket.

9. Remove bearing circlip (Non drive end - single bearing only).

BEARING REMOVAL

1. Fit pulley drawers and draw off bearing, ensuring to protect the threaded hole in the end of the main shaft.

2. Heat the Bearing to 80°C above ambient with an induction heater and fit to shaft. (use induction heater, no other heat source is suitable do not exceed 100°C) (ensure shaft and bearing are clean prior to assembly)

3. Replace the bearing circlip (single bearing only).

Replace the Endbracket

1. Remove jacking bolts from end bracket and lift end bracket into position and fit bracket onto bearing (heat bracket if required). Ensure exciter and PMG leads are pulled through and positioned.

2. Lift rotor to align exciter (use piece of wood as lever under shaft through NDE aperture) fit bolts and secure evenly around end bracket to ensure it is correctly aligned.

3. Replace rotor retaining circlip and permanent magnet assembly if fitted, and replace cover.

4. Connect exciter and re-tie all cables into position and re-assemble terminal box.

NOTE: Prior to re-fitting end bracket check exciter electrically and physically to ensure no damaged caused when dismantling.

7.5.3.4 MAIN ROTOR ASSEMBLY

SINGLE BEARING MACHINE

NOTE: On single bearing machines, before removal from, or re-assembly to the prime mover, position the rotor, if possible, such that a full pole face is at bottom dead centre.

1. Remove all access covers and terminal box lid.
2. Disconnect exciter leads X and XX and PMG leads P2-P3-P4 at the auxiliary terminals inside the terminal box.
3. Ensure that these leads are free to come away with the non drive endbracket when removed.
4. Remove the 8 bolts holding the drive end adaptor to the frame.
5. With a rope sling around drive end adaptor, tap adaptor out of its spigot location; guide over fan and remove.
6. If the generator is fitted with a cartridge. Remove the 4 bolts retaining the non drive end bearing cartridge in the non drive end endbracket (outer 4 bolts). (This includes all regreasable options).
7. Remove the 8 bolts securing the non drive end bracket to the frame.
8. Supporting the non drive end bracket with a hoist, insert two M10 bolts in the two holes provided for 'jacking' purposes (on the end bracket horizontal centre line). Screw in the bolts until the end bracket spigot is clear of the locating recess, lower the whole assembly until the main rotor is resting in the stator bore. Still supporting the non drive end bracket, tap the bracket off the non drive end bearing cartridge (taking care that the exciter stator does not foul exciter rotor windings) and remove.
9. To withdraw the rotor from the stator the rotor must be supported by a rope at the drive end and eased out of the stator core until half the main rotor is protruding out of the stator. At this point it is safe to release the weight from the rope sling.
10. Tightly bind a rope sling around the rotor core, and supporting the non drive end of the rotor, guide it clear of the stator.

Warning!

The rope sling may not be at the centre of gravity of the rotor and guidance at the ends of the rotor is essential. THE FULL WEIGHT OF THE ROTOR GIVEN IN THE TABLE BELOW MUST BE SUPPORTED BY THE CRANE AND SLING. If the rotor core is allowed to drop more than a few millimetres at this point, it will make contact with the stator windings and may damage them.

MINIMUM ROTOR ASSEMBLY WEIGHTS

FRAME	WEIGHT
4 - 4 pole	473 kgs
5 - 4 pole	685 kgs
6 - 4 pole	1093 kgs
6 - 6 pole	1050 kgs
7 - 4 pole	1592 kgs
7 - 6 pole	1790 kgs

Re-assembly is a reversal of the above procedure.

Before assembly of a single bearing rotor into stator housing check that the drive discs are not damaged or cracked or showing any other signs of fatigue. Also check that holes in the discs for drive fixing screws are not elongated.

Damaged components must be replaced.

When refitting discs ensure that the number and thickness of discs, and the tightening torque of hub bolts is in accordance with the table below.

Refer to engine manual for torque setting of disc to flywheel bolts.

FRAME	NO. OF DISCS	SINGLE DISC THICKNESS	TOTAL THICKNESS	TIGHTENING TORQUE
4	4	1.2	4.8	48kgm
				479Nm
5	4	1.2	4.8	48kgm
				479Nm
6	6	1.2	7.2	84kgm
				822Nm
7	6	1.2	7.2	84kgm
				822Nm

Table 18

TWO BEARING MACHINES

NOTE:

Position rotor, if possible, such that a full pole face is at bottom dead centre.

The procedure for removal of a two bearing rotor is similar to that outlined for single bearing machines with the exception of Steps 4 and 5 relating to the drive end adaptor.

For removal of this item proceed as follows:-

1. Remove the 8 bolts holding drive end adaptor to frame and 4 bolts retaining bearing cartridge in drive end bracket (outer 4 bolts), if fitted.
2. With rope sling around the shaft extension, supporting the rotor weight tap the drive end bracket spigot out of its locating recess and lower rotor assembly to rest in the stator bore.
3. Take the weight of the drive end bracket on the sling and tap the bracket off the drive end bearing cartridge, guide over the fan and remove.

Re-assembly is a reversal of the above procedure.

7.6 RETURNING TO SERVICE

After rectification of any faults found, remove all test connections and reconnect all control system leads.

Restart the set and adjust VOLTS control potentiometer on AVR by slowly turning clockwise until rated voltage is obtained.

Refit all terminal box covers/access covers and reconnect heater supply.

Caution!	**Failure to refit all guards, access covers and terminal box covers can result in personal injury or death.**

7.7 MAINTENANCE

Re-lubrication

1. Ensure grease gun nozzle and re-lubrication nipple are free from contaminants or abrasive material.

2. Apply the specified re-lubrication grease fill quantity (see table below) via the grease nipple.

3. Run the machine for 10 minutes to allow excess grease to exhaust.

Check inside the non-drive end PMG cover for expelled grease. Clean out as necessary.

RELUBRICATION DETAILS FOR REGREASABLE BEARINGS				
HOTHOK	BEARING POSITION	GREASE QUANTITY		RELUBRICATION PERIOD
		CM3	GRAMS	
5	Non-Drive End	33	29	4,500 Hs
5	Drive End	46	41	4,500 Hs
6	Non-Drive End	60	53	4,500 Hs
6	Drive End	75	66	4,500 Hs
7	Non-Drive End	85	75	4,500 Hs
7	Drive End	100	89	4,500 Hs

Table 19

SECTION 8

SPARES AND AFTER SALES SERVICE

8.1 RECOMMENDED SPARES

Service parts are conveniently packaged for easy identification. Genuine parts may be recognised by the Nupart name.

We recommend the following for Service and Maintenance. In critical applications a set of these service spares should be held with the generator.

1. **Diode Set (6 diodes with Surge Suppressors)**

HC4/5	**RSK5001**
HC6/7	**RSK6001**

2.

SX440 AVR	**E000-24030**
SX421 AVR	**E000-24210**
MX321 AVR	**E000-23212**
MX341 AVR	**E000-23412**

3. **Bearings**

PART NUMBERS NON DRIVE-END BEARINGS				
	HC4	**HC5**	**HC6**	**HC7**
Reagreasable bearings	N/A	OPT 051-01068	OPT 051-01065	STD 051-01063
Sealed for life with a cartridge	N/A	OPT 051-01068	STD 051-01070	N/A
Sealed for life without cartridge	STD 051-01072	STD 051-01072	N/A	N/A

Table 20

PART NUMBERS FOR DRIVE-END BEARINGS				
	HC4	**HC5**	**HC6**	**HC7**
Reagreasable bearings	N/A	OPT 051-01067	OPT 051-01064	STD 051-01062
Sealed for life with a cartridge	STD 051-01070	STD 051-01071	STD 051-01069	N/A
Sealed for life without cartridge	N/A	N/A	N/A	N/A

Table 21

When ordering parts the machine serial number or machine identity number and type should be quoted, together with the part description. For location of these numbers see paragraph 1.3.

Orders and enquiries for parts should be addressed to:

Newage International Ltd.,
Nupart Department,
P O Box 17, Barnack Road,
Stamford,
Lincolnshire
PE9 2NB
England.

Telephone: 44 (0) 1780 484000
Fax: 44 (0) 1780 766074

Website: www.newagestamford.com

or any of our subsidiary companies listed on the back cover.

8.2 AFTER SALES SERVICE

A full technical advice and on-site service facility is available from our Service Department at Stamford or through our subsidiary companies. A repair facility is also available at our Stamford Works.

This manual is available in the following languages on request:
English, French, German, Italian and Spanish.

Denne manual er til rådighed på følgende sprog: engelsk, fransk, tysk, italiensk og spansk.

Denne håndboken er tilgjengelig på de følgende språkene: engelsk, fransk, tysk, italiensk og spansk.

Sur simple demande, ce manuel vous sera fourni dans l'une des langues suivantes: anglais, français, allemand, italien, espagnol.

Dieses Handbuch ist auf Anfrage in den folgenden Sprachen erhältlich: Englisch, Französisch, Deutsch, Italienisch, Spanisch.

Deze handleiding is op verzoek leverbaar in de volgende talen: Engels, Frans, Duits, Italiaans, Spaans.

Este manual pode também ser obtido nas seguintes línguas: inglês, francês, alemão, italiano e espanhol.

Tämä käsikirja on saatavissa pyynnöstä seuraavilla kielillä: Englanti, ranska, saksa, italia, espanja.

Il presente manuale è disponibile, su richiesta, nelle seguenti lingue: inglese, francese, tedesco, italiano e spagnolo.

Este manual también puede solicitarse en los siguientes idiomas: inglés, francés, alemán, italiano e español.

Αυτό το εγχειρίδιο οδηγιών χρήσεως διατίθεται στις ακόλουθες γλώσσες κατόπιν αιτήσενς: Αγγλικά, Γαλλικά Γερμανικά, Ιταλικά, Ισπανικά.

A.C. GENERATOR WARRANTY

WARRANTY PERIOD

A.C. Generators

In respect of a.c. generators the Warranty Period is eighteen months from the date when the goods have been notified as ready for despatch by N.I. or twelve months from the date of first commissioning (whichever is the shorter period).

DEFECTS AFTER DELIVERY

We will make good by repair or, at our option, by the supply of a replacement, any fault which under proper use appears in the goods within the period specified above, and is found on examination by us to be solely due to defective material and workmanship; provided that the defective part is promptly returned, carriage paid, with all identification numbers and marks intact, to our works or, if appropriate to the Dealer who supplied the goods.

Any part repaired or replaced, under warranty, will be returned by N.I. free of charge (via sea freight if outside the UK).

We shall not be liable for any expenses which may be incurred in removing or replacing any part sent to us for inspection or in fitting any replacement supplied by us. We shall be under no liability for defects in any goods which have not been properly installed in accordance with N.I. recommended installation practices as detailed in the publications 'N.I. Installation, Service and Maintenance Manual' and 'N.I. Application Guidelines', or which have been improperly stored or which have been repaired, adjusted or altered by any person except ourselves or our authorised agents, or in any second-hand goods, proprietary articles or goods not of our own manufacture although supplied by us, such articles and goods being covered by the warranty (if any) given by the separate manufacturers.

Any claim under this clause must contain fully particulars of the alleged defect, the description of the goods, the date of purchase, and the name and address of the Vendor, the Serial Number (as shown on the manufacturers identification plate) or for Spares the order reference under which the goods were supplied.

Our judgement in all cases of claims shall be final and conclusive and the claimant shall accept our decision on all questions as to defects and the exchange of a part or parts.

Our liability shall be fully discharged by either repair or replacement as above, and in any event shall not exceed the current list price of the defective goods.

Our liability under this clause shall be in lieu of any warranty or condition implied by law as to the quality or fitness for any particular purpose of the goods, and save as expressly provided in this clause we shall not be under any liability, whether in contract, tort or otherwise, in respect of defects in goods delivered or for any injury, damages or loss resulting from such defects or from any work undone in connection therewith.

MACHINE SERIAL NUMBER

NEWAGE INTERNATIONAL LIMITED

REGISTERED OFFICE AND ADDRESS:
PO BOX 17
BARNACK ROAD
STAMFORD
LINCOLNSHIRE
PE9 2NB ENGLAND

Telephone: 44 (0) 1780 484000
Fax: 44 (0) 1780 484100
Web site: www.newagestamford.com

SUBSIDIARY COMPANIES

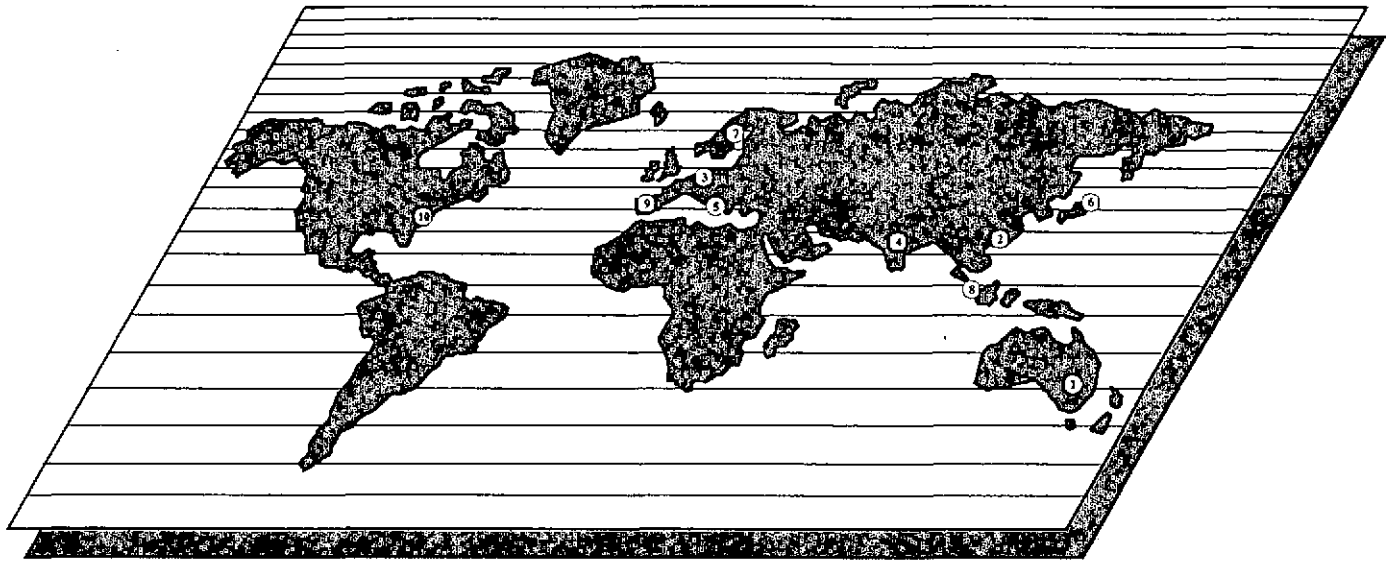

1 AUSTRALIA: NEWAGE ENGINEERS PTY. LIMITED
PO Box 6027, Baulkham Hills Business Centre,
Baulkham Hills NSW 2153.
Telephone: Sydney (61) 2 9680 2299
Fax: (61) 2 9680 1545

2 CHINA: WUXI NEWAGE ALTERNATORS LIMITED
Plot 49-A, Xiang Jiang Road
Wuxi High - Technical Industrial Dev. Zone
Wuxi, Jiangsu 214028
PR of China
Tel: (86) 510 5216212
Fax: (86) 510 5217673

3 GERMANY: NEWAGE ENGINEERS G.m.b.H.
Rotenbrückenweg 14, D-22113 Hamburg.
Telephone: Hamburg (49) 40 714 8750
Fax: (49) 40 714 87520

4 INDIA: C.G. NEWAGE ELECTRICAL LIMITED
C33 Midc, Ahmednagar 414111, Maharashtra.
Telephone: (91) 241 778224
Fax: (91) 241 777494

5 ITALY: NEWAGE ITALIA S.r.l.
Via Triboniano, 20156 Milan.
Telephone: Milan (39) 02 380 00714
Fax: (39) 02 380 03664

6 JAPAN: NEWAGE INTERNATIONAL JAPAN
8 - 5 - 302 Kashima
Hachioji-shi
Tokyo, 192-03
Telephone: (81) 426 77 2881
Fax: (81) 426 77 2884

7 NORWAY: NEWAGE NORGE A/S
Økern Naeringspark, Kabeigt. 5
Postboks 28, Økern, 0508 Oslo
Telephone: Oslo (47) 22 97 44 44
Fax: (47) 22 97 44 45

8 SINGAPORE: NEWAGE ASIA PACIFIC PTE LIMITED
10 Toh Guan Road #05-03
TT International Tradepark
Singapore 608838
Telephone: Singapore (65) 794 3730
Fax: (65) 898 9065
Telex: RS 33404 NEWAGE

9 SPAIN: STAMFORD IBERICA S.A.
Ctra. Fuenlabrada-Humanes, km.2
Poligono Industrial "Los Linares"
C/Pico de Almanzor, 2
E-28970 HUMANES DE MADRID (Madrid)
Telephone: Madrid (34) 91 604 8987/8928
Fax: (34) 91 604 81 66

10 U.S.A.: NEWAGE LIMITED
4700 Main St, N.E.
Fridley
Minnesota 55421
Telephone: (1) 800 367 2764
Fax: (1) 800 863 9243

© 2000 Newage International Limited.
Printed in England

FANUC

GE Fanuc Automation

Series 90™-30 PLCs

The Series 90™-30 PLCs are a family of controllers, I/O systems and specialty modules designed to meet the demand for versatile industrial solutions. With its single overall control architecture, the Series 90-30 has been the PLC of record in over 200,000 applications, such as high-speed packaging, material handling, complex motion control, water treatment, continuous emissions monitoring, mining, food processing, elevator control, injection molding and many more.

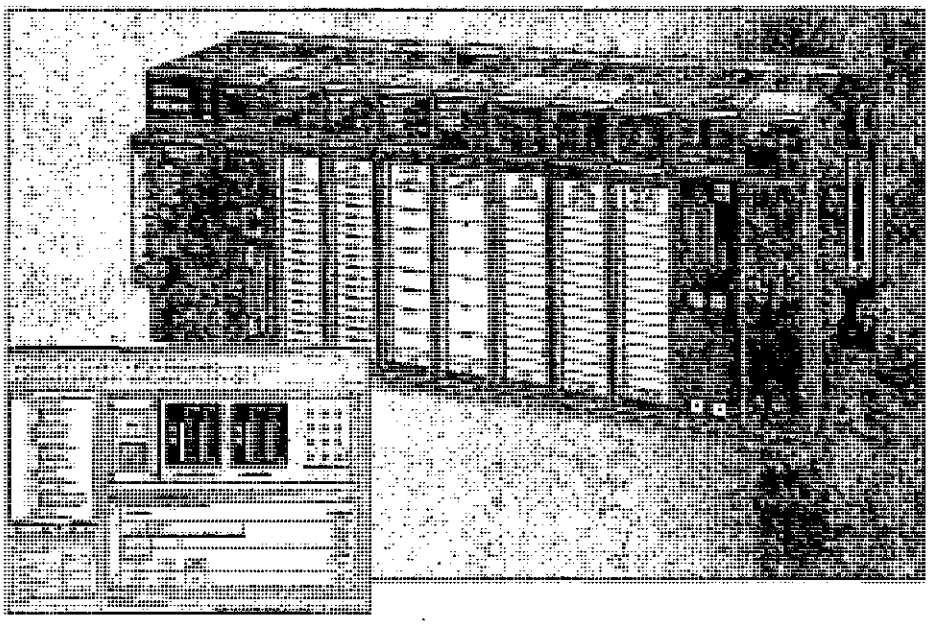

Thanks to its modular design, the Series 90-30 offers unmatched versatility. Configure just the system you need, saving critical space and reducing cost.

With over 100 I/O modules, the Series 90-30 PLC can be adapted to a wide range of applications.

- Digital interfaces for push buttons, switches, proximity sensors, relays, contactors and many other devices
- Analog modules with varying degrees of resolution for flow, temperature or pressure applications
- Direct connect wiring or remote termination
- Local or remote I/O systems

Series 90-30 Ethernet communications provide a real-time link between the plant floor and the boardroom. You can begin with an Ethernet-enabled CPU, or at a later date, choose from our selection of rack-mounted Ethernet modules. The Series 90-30 Ethernet module supports both SRTP and Modbus TCP/IP application protocols.

The scaleable processing power in the Series 90-30 CPU creates a clear upgrade path. Create the system that's ideal today, while leaving open the option of creating a more powerful system tomorrow — without having to change your application software.

Motion control integrated into the Series 90-30 fosters high performance point-to-point applications.

A variety of Series 90-30 field bus interfaces enables distributed control and/or I/O. Choose from Ethernet EGD, Profibus-DP™, Genius®, DeviceNet™ and Interbus-S™ modules. Field Bus interface modules are easy to install and quick to configure. Plug them into an existing system or design a new system around them.

Ease of programming is a strong suit of the Series 90-30. Choose the programming options that meet your needs. Windows®-based IEC programming, advanced C or State Logic®. Floating point math, PID, indirect addressing, array moves and sequencing are just a few of the over 200 instructions available.

The Series 90-30 stands out among small controls for offering redundancy options. The Series 90-30 is the low-cost solution for high availability applications, with redundant CPUs and power supplies.

Easy trouble shooting and machine setup using a handheld PDA. CIMPLICITY® Machine Edition Logic Developer PDA software allows you to interface a Palm® handheld device to your Series 90-30 controller. With Logic Developer PDA, you can monitor/change data, view diagnostics, force ON/OFF, and configure machine setup — saving you time and increasing productivity.

Ordering Information

Description	Catalog Number		Catalog Number	
Discrete Input Modules	IC693MDL230	120 VAC Isolated Input (8 Points)	IC693MDL646	24 VDC Input, Neg/Pos Logic, 1 msec Filter (16 Points)
	IC693MDL231	240 VAC Isolated Input (8 Points)	IC693MDL648	48 VDC Input, Neg/Pos Logic, 1 msec filter, Neg/Pos Logic (16 Points)
	IC693MDL240	120 VAC Input (16 Points)	IC693MDL653	24 VDC Input, Neg/Pos Logic, 2msec Filter (32 Points)
	IC693MDL241	24 VAC/VDC Input (16 Points)	IC693MDL654	5/12 VDC (TTL) Input, Neg/Pos Logic (32 Points)
	IC693MDL632	125 VDC Input (8 Points)	IC693MDL655	24 VDC Input, Neg/Pos Logic, 1 ms, (32 Points)
	IC693MDL634	24 VDC Input, Neg/Pos Logic (8 Points)	IC693ACC300	Input Simulator Module (8 Points)
	IC693MDL645	24 VDC Input, Neg/Pos Logic (16 Points)		
Discrete Output Modules	IC693MDL310	120 VAC Output, 0.5 Amp (12 Points)	IC693MDL740	12/24 VDC Output, 0.5 Amp, Positive Logic (16 Points)
	IC693MDL330	120/240 VAC Output, 2 Amp (8 Points)	IC693MDL741	12/24 VDC Output, 0.5 Amp, Negative Logic (16 Points)
	IC693MDL340	120 VAC Output, 0.5 Amp (16 Points)	IC693MDL742	12/24 VDC Output, 1 Amp, Positive Logic (16 Points), Fused
	IC693MDL390	120/240 VAC Isolated Output, 2 Amp (5 Points)	IC693MDL748	48 VDC Output, 0.5 Amps, Positive Logic (8 Points)
	IC693MDL730	12/24 VDC Output, 2 Amp, Positive Logic (8 Points)	IC693MDL750	12/24 VDC Output, Negative Logic (32 Points)
	IC693MDL731	12/24 VDC Output, 2 Amp, Negative Logic (8 Points)	IC693MDL751	12/24 VDC Output, Positive Logic (32 Points)
	IC693MDL732	12/24 VDC Output, 0.5 Amp, Positive Logic (8 Points)	IC693MDL752	5/12/24 VDC (TTL) Output, Negative Logic, (32 Points)
	IC693MDL733	12/24 VDC Output, 0.5 Amp, Negative Logic (8 Points)	IC693MDL753	12/24 VDC Output, Positive Logic (32 Points)
	IC693MDL734	125 VDC Output, (6 Points)		
Relay Output Module	IC693MDL930	Relay Output, Isolated, 4 Amp (8 Points)	IC693MDL940	Relay Output, 2 Amp (16 Points)
	IC693MDL931	Relay Output, 8 Amp Form B/C contacts, Isolated in 2 Groups of 4 (8 Points)		
Mixed Discrete Module	IC693MDR390	Mixed I/O, 24 VDC Input (8 points), Relay Output (8 points)	IC693MAR590	Mixed I/O, 120 VAC Input (8 Points), Relay Output (8 Points)
Analog Input Modules	IC693ALG220	Analog Input, Voltage/Current, 4 Channels	IC693ALG222	Analog Input, Voltage 16 Single/8 Differential Channels
	IC693ALG221	Analog Input, Current, 4 Channels	IC693ALG223	Analog Input, Current, 16 Single Channels
Analog Output Modules	IC693ALG390	Analog Output, Voltage, 2 Channels	IC693ALG392	High Density Analog Output (8 Channels)
	IC693ALG391	Analog Output, Current, 2 Channels		
Mixed Analog Modules	IC693ALG442	Analog Combo Module 4IN/2OUT		
Motion Modules	IC693APU300	High Speed Counter (HSC)	IC693APU305	High Speed Counter with Gray Code Encoder or an A QUAD B Encoder Input
	IC693APU301	Axis Positioning Module (APM), 1 Axis	IC693DSM302	Digital Servo Motion Controller, 2 Axis
	IC693APU302	Axis Positioning Module (APM), 2 Axis	IC693DSM314	Digital Servo Motion Controller, 1-2 Axis of Digital Servo or 1-4 Axis Analog Servo
Specialty Modules	IC693MDL760	Solenoid Valve Output (11 Points)/24 VDC Output, 0.5 Amp, Positive Logic (5 Points)	IC693PTM101	Power Transducer Module, CT and PT Interface 120/240 VAC (1m cable)
	IC693PCM301	Programmable Coprocessor Module, 192 KB (47 KB Basic or C Program), 2 Serial Ports	IC693TCM302	Temperature Control Module, (8) TC In and (8) 24 VDC Solid State Outputs
	IC693PCM311	Programmable Coprocessor Module, 640 KB (640 KB Basic or C Program), 2 Serial Ports	IC693TCM303	Temperature Control Module Extended Temperature Range, (8) TC In and (8) 24 VDC Solid State Outputs
	IC693PTM100	Power Transducer Module, CT and PT Interface 120/240 VAC (0.5m Cable)		
Communications Modules	IC693BEM331	Genius Bus Controller (Supports I/O and Datagrams)	IC693PBM200	Profibus DP Master Module
	IC693CMM302	Communication Module, Genius (1 Kbyte) GCM+ (No Datagram Support)	IC693PBM201	Profibus DP Slave Module
	IC693CMM311	Communications Module, CCM, RTU, SNP, and SNPx Protocols	IC693DNM200	DeviceNet Master Module
	IC693CMM321	Ethernet Interface TCP/IP Module, 10Mbs (Supports SRTP and Modbus TCP/IP, No EGD)	IC693DNS201	DeviceNet Slave Module
Controllers	IC693CPU311	5-Slot Base with CPU in Base (6KBytes User Program), Not Expandable	IC693CPU360	CPU 360 Module (240KBytes Configurable User Memory, 4K I/O; 8 Racks), No Built-In Serial Ports, Logic Execution is .22msec/K
	IC693CPU313	5-Slot Base with Turbo CPU in Base (Logic Execution is .6 msec), 1K Registers, (12KBytes User Program), Not Expandable	IC693CPU363	CPU 363 Module (240KBytes Configurable User Memory 4K I/O, 8 Racks), 2 Built-In Serial Ports, Logic Execution is .22msec/K
	IC693CPU323	10-Slot Base with Turbo CPU in Base (Logic Execution is .6 msec) 12Kbytes User Program, Not Expandable	IC693CPU364	CPU 364 Module (240KBytes Configurable User Memory 4K I/O, 8 Racks), No Built-In Serial Ports, Built-In 10Mbs Ethernet, Supports SRTP, Channels and EGD, Logic Execution is .22msec/K
	IC693CPU350	CPU 350 Module (32KBytes User Memory, 4K I/O, 8 Racks), No Built-In Serial Ports, Logic Execution is .22msec/K	IC693CPU374	CPU 374 Module (240KBytes Configurable User Memory), No Built-In Serial Ports, Built-In 10/100Mbs with Built-In Switch, Ethernet Supports SRTP, EGD and No Channel Support, Logic Execution is .22msec/K
Backplanes	IC693CHS391	Base, CPU, 10 Slots, Use with CPU331/CSE331 and above	IC693CHS397	Base, CPU, 5 Slots (use with CPU331/CSE331 and above)
	IC693CHS392	Base, Expansion, 10 Slots	IC693CHS398	Base, Expansion, 5 Slots
	IC693CHS393	Base, Remote Expansion, 10 Slots (700 ft.)	IC693CHS399	Base, Remote Expansion, 5 Slots (700 ft.)
Power Supplies	IC693PWR321	Power Supply, 120/240 VAC, 125 VDC, Standard, 30 Watts	IC693PWR332	Power Supply, 12 VDC, High Capacity, 30 Watts
	IC693PWR322	Power Supply, 24/48 VDC, Standard, 30 Watts	IC693ACC340	Redundant Power Supply Base (RPSB) with 0.1 meter cable to connect to Power Supply Adapter Module
	IC693PWR328	Power Supply, 48 VDC, Standard, 30 Watts	IC693ACC341	Redundant Power Supply Base with 0.5 meter cable to connect to Power Supply Adapter Module
	IC693PWR330	Power Supply, 120/240 VAC, 125 VDC, High Capacity, 30 Watts	IC693ACC350	Redundant Power Supply Adapter (RPSA) Module. The RPSA replaces the power supply on a CPU base or expansion base and connects to a Redundant Power Supply Base.
	IC693PWR331	Power Supply, 24 VDC, High Capacity, 30 Watts		
Accessories	IC693ACC301	Replacement Battery, CPU & PCM (Qty. 2)	IC693CBL301	Rack to Rack Expansion Cable, 2 Meters
	IC693ACC302	High Capacity Battery Pack	IC693CBL302	Rack to Rack Expansion Cable, 15 Meters
	IC200ACC003	EZ Program Store Flash Device (for CPU374 only)	IC693CBL312	Rack to Rack Expansion Cable, 0.15 Meters, Shielded
	IC693ACC310	Filler Module, Blank Slot	IC693CBL313	Rack to Rack Expansion Cable, 8 Meters
	IC693CBL300	Rack to Rack Expansion Cable, 1 Meter	IC693CBL314	Rack to Rack Expansion Cable, 15 Meters, Shielded
Programming and Trouble Shooting Tools	IC646MPP001	Logic Developer - PLC Professional	IC646MPH101	Logic Developer PDA Software Tool with Cable Adapter
	IC646MPS001	Logic Developer - PLC Standard		

© 2003 GE Fanuc Automation Americas, Inc. All Rights Reserved. Series 90, VersaPro and LogicMaster are trademarks and Genius is a registered trademark of GE Fanuc Automation Americas, Inc. Profibus-DP is a trademark of Profibus International. DeviceNet is a trademark of the Open DeviceNet Vendor Association, Inc. Interbus-S is a trademark of Phoenix Contact. Windows is a registered trademark of Microsoft Corporation. State Logic is a registered trademark of Adatek, Inc. Palm is a trademark of Palm, Inc.

FANUC

GE Fanuc Automation

GE Fanuc Automation Information Centers

USA and the Americas 1-800-648-2001 or (434) 978-5100
Europe and Middle East (352) 727979-1
Asia Pacific 86-21-3222-4555

Additional Resources

For detailed technical specifications and product ordering information, please visit the GE Fanuc e-catalog at:

www.gefanuc.com

GFA-148J
10M 06/03

GE Fanuc Automation

Programmable Control Products

Series 90™-30 PLC
Installation and Hardware Manual

GFK-0356Q

August 2002

GFL-002

Warnings, Cautions, and Notes as Used in this Publication

Warning

Warning notices are used in this publication to emphasize that hazardous voltages, currents, temperatures, or other conditions that could cause personal injury exist in this equipment or may be associated with its use.

In situations where inattention could cause either personal injury or damage to equipment, a Warning notice is used.

Caution

Caution notices are used where equipment might be damaged if care is not taken.

Note

Notes merely call attention to information that is especially significant to understanding and operating the equipment.

This document is based on information available at the time of its publication. While efforts have been made to be accurate, the information contained herein does not purport to cover all details or variations in hardware or software, nor to provide for every possible contingency in connection with installation, operation, or maintenance. Features may be described herein which are not present in all hardware and software systems. GE Fanuc Automation assumes no obligation of notice to holders of this document with respect to changes subsequently made.

GE Fanuc Automation makes no representation or warranty, expressed, implied, or statutory with respect to, and assumes no responsibility for the accuracy, completeness, sufficiency, or usefulness of the information contained herein. No warranties of merchantability or fitness for purpose shall apply.

The following are trademarks of GE Fanuc Automation North America, Inc.

Alarm Master	Field Control	Modelmaster	Series 90
CIMPLICITY	GEnet	Motion Mate	Series One
CIMPLICITY Control	Genius	PowerMotion	Series Six
CIMPLICITY PowerTRAC	Genius PowerTRAC	ProLoop	Series Three
CIMPLICITY 90-ADS	Helpmate	PROMACRO	VuMaster
CIMSTAR	Logicmaster	Series Five	Workmaster

©Copyright 1998—2002 GE Fanuc Automation North America, Inc.
All Rights Reserved.

RFI Standards

The Series 90-30 PLC and its associated modules have been tested and found to meet or exceed the requirements of FCC Rule, Part 15, Subpart J. The Federal Communications Commission (FCC) requires the following note to be published according to FCC guidelines.

NOTE

This equipment generates, uses, and can radiate radio frequency energy and if not installed in accordance with this instruction manual, may cause harmful interference to radio communications. It has been tested and found to comply with the limits for a Class A digital device pursuant to Part 15 of the FCC Rules, which are designed to provide reasonable protection against harmful interference when operated in a commercial environment. Operation of this equipment in a residential area is likely to cause harmful interference, in which case the user will be required to correct the interference at his own expense.

The following note is required to be published by the Canadian Department of Communications.

NOTE

This digital apparatus does not exceed the Class A limits for radio noise emissions from digital apparatus set out in the radio interference regulations of the Canadian Department of Communications.

The following statements are required to appear in the *Series 90_-30 Installation Manual* and the *Series 90_-30 I/O Specifications Manual* for Class I Div 2 Hazardous Locations.

1. EQUIPMENT LABELED WITH REFERENCE TO CLASS I, GROUPS A, B, C, and D, DIV. 2 HAZARDOUS LOCATIONS IS SUITABLE FOR USE IN CLASS I, DIVISION 2, GROUPS A, B, C, D OR NON-HAZARDOUS LOCATIONS ONLY.
2. WARNING - EXPLOSION HAZARD - SUBSTITUTION OF COMPONENTS MAY IMPAIR SUITABILITY FOR CLASS I, DIVISION 2:
3. WARNING - EXPLOSION HAZARD - DO NOT DISCONNECT EQUIPMENT UNLESS POWER HAS BEEN SWITCHED OFF OR THE AREA IS KNOWN TO BE NON-HAZARDOUS.
4. ALL UNUSED SLOTS IN ALL BASEPLATES MUST BE POPULATED WITH FILLER MODULES, IC693ACC310, OR EQUIVALENT.

Preface

This manual describes the GE Fanuc Series 90-30 Programmable Logic Controller (PLC). It contains a description of hardware components and provides basic hardware installation procedures. The Series 90-30 PLC is a member of the Series 90_ family of Programmable Logic Controllers from GE Fanuc.

For a list of product standards, refer to data sheet GFK-0867B or later, *GE Fanuc Approvals, Standards, General Specifications* which lists all of the standards for GE Fanuc products. Installation instructions in this manual are provided for installations that do not require special procedures for noisy or hazardous environments. For installations that must conform to more stringent requirements (such as CE Mark), see GFK-1179, *Installation Requirements for Conformance to Standards.*

What's New in This Manual

- Added the model 374 CPU, which supports connection to an Ethernet network through two built-in 10BaseT/100BaseTx auto-negotiating full-duplex Ethernet ports. Models 364 (release 9.10 and later) and 374 are the only Series 90-30 CPUs that support Ethernet Global Data. Note that the CPU374 is supported only by the Windows®-based programmers.
- Other corrections and clarifications as necessary.

Related Publications

For more information on Series 90-30 products, refer to these publications. (For a publication to product catalog number cross-reference refer to Appendix G):

GFK-0255 - Series 90™ PCM and Support Software User's Manual

GFK-0256 - MegaBasic™ Programming Reference Manual

GFK-0293 - Series 90™ -30 High Speed Counter User's Manual

GFK-0401 - Workmaster® II PLC Programming Unit Guide to Operation

GFK-0402 - Series 90™ -30 and 90-20 PLC Hand-Held Programmer User's Manual

GFK-0412 - Genius® Communications Module User's Manual

GFK-0466 - Logicmaster 90™ Series 90™ -30/20/Micro Programming Software User's Manual

GFK-0467 - Series 90™ -30/20/Micro Programmable Controllers Reference Manual

GFK-0487 - Series 90™ PCM Development Software (PCOP) User's Manual

GFK-0499 - CIMPLICITY® 90-ADS Alphanumeric Display System User's Manual

Preface

GFK-0582 - Series 90™ PLC Serial Communications User's Manual

GFK-0631 - Series 90™ -30 I/O LINK Interface User's Manual

GFK-0641 - CIMPLICITY® 90-ADS Alphanumeric Display System Reference Manual

GFK-0664 - Series 90™-30 PLC Axis Positioning Module Programmer's Manual

GFK-0685 - Series 90™ Programmable Controllers Flow Computer User's Manual

GFK-0695 - Series 90™-30 Enhanced Genius) Communications Module User's Manual

GFK-0726 - Series 90™-30 PLC State Logic Processor User's Guide

GFK-0732 - Series 90™-30 PLC ECLiPS User's Manual

GFK-0747 - Series 90™-30 PLC OnTOP User's Guide

GFK-0750 - OnTop for Series 90™-30 (State Logic) Program User's Manual

GFK-0781 - Motion Mate™ APM300 for Series 90™-30 PLC Follower Mode User's Manual

GFK-0823 - Series 90™ -30 I/O LINK Master Module User's Manual

GFK-0828 - Series 90™ -30 Diagnostic System User's Manual

GFK-0840 - Motion Mate™ APM300 for Series 90™ -30 PLC Standard Mode User's Manual

GFK-0867 - GE Fanuc Product Agency Approvals, Standards, General Specifications

GFK-0898 - Series 90™ -30 PLC I/O Module Specifications

GFK-1028 - Series 90™ -30 I/O Processor Module User's Manual

GFK-1034 - Series 90™ -30 Genius® Bus Controller User's Manual

GFK-1037 - Series 90™ -30 FIP Remote I/O Scanner User's Manual

GFK-1056 - Series 90™ -30 State Logic Control System User's Manual

GFK-1186 - TCP/IP Ethernet Communications for the Series 90_-30 PLC Station Manager Manual

GFK-1179 - Series 90™ PLC Installation Requirements for Conformance to Standards

GFK-1464 - Motion Mate DSM302 for Series 90™-30 PLCs User's Manual

GFK-1466 - Temperature Control Module for the Series 90™-30 PLC User's Manual

GFK-1541 - TCP/IP Ethernet Communications for the Series 90™ PLC User's Manual

Contents

Chapter 1 Overview of the Series 90-30 PLC 1-1

The Basic Parts of a Series 90-30 PLC 1-1
Assembling a Basic Series 90-30 PLC System 1-2
What else would be needed to make this basic system functional? 1-6
What if the application requires more than five modules? 1-6
What if the application requires more than ten modules? 1-7
What is the Difference Between Expansion and Remote baseplates? 1-8
What if I need to cover more than 700 feet (213 meters)? 1-9

Chapter 2 Installation 2-1

Receiving your Products - Visual Inspection 2-1
Pre-installation Check 2-1
Warranty Claims 2-1
Working with Series 90-30 Modules 2-2
Module Features 2-2
Installing a Module 2-3
Removing a Module 2-4
Installing a Module's Terminal Board 2-5
Removing a Module's Terminal Board 2-6
I/O Module Terminal Board Posts 2-7
Installing and Removing Terminal Boards with Holding Screws 2-7
Baseplate Mounting 2-8
Mounting a Baseplate to a Panel 2-8
Mounting a Baseplate to a 19" Rack 2-8
Grounding Procedures 2-11
System Grounding Procedures 2-11
Ground Conductors 2-11
Series 90-30 PLC Equipment Grounding 2-12
Baseplate Safety Grounding 2-12
Grounding 19" Rack-Mounted Baseplates 2-13
Programmer Grounding 2-13
Module Shield Grounding 2-14
Shield Grounding Information for CPUs with External Port Connections 2-14
CPU351 and 352 Shield Grounding 2-14
CPU363, CPU364, and CPU374 Shield Grounding 2-16
Additional Modules with Shield Grounding Requirements 2-16
General Wiring Guidelines 2-17
Discrete I/O Module Connection Methods 2-18
Connections to I/O Module Terminal Boards 2-18
Terminal Block Quick Connect Installation for 16-Point Discrete Modules 2-19
Installation of 32-Point Discrete, 50-Pin Connector Modules 2-19
Using Weidmuller #912263 Terminal Block 2-19
Using a Generic Terminal Block or Strip 2-20
Direct Method 2-20
Installation of Discrete 32-Point, Dual 24-Pin Connector Modules 2-20
Using a TBQC 2-20

Contents

With a Generic Terminal Block/Strip 2-20
Direct Method 2-21
General Wiring Methods for Analog Modules 2-21
Analog Input Module Wiring Methods 2-21
Using a Generic Terminal Block or Strip 2-21
Direct Method 2-21
TBQC not Recommended for Analog Modules 2-22
Analog Output Module Wiring 2-22
General 2-22
Using a Generic Terminal Block or Strip 2-22
Direct Method 2-22
TBQC not Recommended for Analog Modules 2-22
AC Power Source Connections 2-23
AC Input Wiring to AC/DC Power Supplies 2-23
Power Supply Overvoltage Protection Devices 2-24
Special Installation Instructions for Floating Neutral (IT) Systems 2-25
Definition of Floating Neutral Systems 2-25
Use These Special Installation Instructions for Floating Neutral Systems 2-26
DC Power Source Connections 2-27
DC Input Wiring to AC/DC and DC-Only Power Supplies 2-27
+24 VDC Output (All Supplies) 2-27
Basic Installation Procedure 2-28

Chapter 3 Baseplates 3-1

Baseplate Types 3-1
Common Baseplate Features 3-1
Two Baseplate Sizes 3-2
Baseplate Terms 3-3
CPU Baseplates 3-4
Embedded CPU Baseplates (Figures 3-2 and 3-3) 3-4
Modular CPU Baseplates (Figures 3-4 and 3-5) 3-6
Expansion Baseplates (Figures 3-6 and 3-7) 3-7
Remote Baseplates (Figures 3-8 and 3-9) 3-8
I/O Bus Expansion Cables 3-10
Differences Between Remote and Expansion Racks 3-11
Mixing Expansion and Remote Baseplates in a System 3-11
Termination Requirement for Expansion or Remote System 3-12
Powering Down Individual Expansion or Remote Baseplates 3-12
Series 90-30 PLC Backplane 3-12
Rack Number DIP Switch on Expansion and Remote Baseplates 3-13
Expansion and Remote Baseplates Connection Example 3-15
Baseplate Mounting Dimensions 3-16
Embedded CPU (311, 313, and 323) Baseplate Dimensions 3-16
Modular CPU, Expansion, and Remote Baseplate Dimensions 3-18

Contents

Load Ratings, Temperature, and Mounting Position 3-19
Baseplate Adapter Brackets for 19" Rack Mounting 3-20
Baseplate Comparison Table 3-22

Chapter 4 Power Supplies 4-1

Power Supply Categories 4-1
Power Supply Feature Comparison 4-1
AC/DC Input Power Supplies 4-2
IC693PWR321 Standard Power Supply, 120/240 VAC or 125 VDC Input 4-2
IC693PWR330 High Capacity Power Supply, 120/240 VAC/125 VDC Input 4-4
Field Wiring Connections for the AC/DC Input Power Supplies 4-5
Isolated 24 VDC Supply Output Connections 4-6
DC Input Only Power Supplies 4-7
IC693PWR322 Standard Power Supply, 24/48 VDC Input 4-7
Calculating Input Power Requirements for IC693PWR322 4-8
IC693PWR328 Standard Power Supply, 48 VDC Input 4-10
Calculating Input Power Requirements for IC693PWR328 4-11
Input Power/Current Calculation for IC693PWR328 Power Supply 4-12
IC693PWR331 High Capacity Power Supply, 24 VDC Input 4-13
Current Derating for Higher Temperatures 4-14
Calculating Input Power Requirements for IC693PWR331 4-15
Field Wiring Connections to the DC Input-Only Power Supplies 4-15
Common Series 90-30 Power Supply Features 4-16
Status Indicator Lights on all Power Supplies 4-16
Input Overvoltage Protection Devices 4-16
Output Voltage Connections to Backplane (All Supplies) 4-17
Overcurrent Protection (all Supplies) 4-18
Timing Diagram 4-18
CPU Serial Port Connector on Power Supply (All Supplies) 4-19
CPU Serial Port Information 4-19
Backup Battery for RAM Memory (All Supplies) 4-20

Chapter 5 CPUs 5-1

CPU Types for Series 90-30 PLCs 5-1
Embedded CPUs 5-1
Modular CPUs 5-2
General CPU Features 5-3
Microprocessor 5-3
CPU Serial Port (Connector on Power Supply) 5-3
Memory Volatility 5-4
RAM Memory 5-5
RAM Memory Backup/Backup Battery Information 5-5
Programmable Read-Only Memory (PROM) Types 5-5
Uses of PROM devices in the 90-30 CPUs 5-5

Contents

CPU Firmware 5-6
Determining CPU Revision Levels (Versions) 5-7
EPROM and EEPROM User Program Storage Options 5-8
Comparing EPROM and EEPROM Features 5-8
Procedure for Creating an EPROM 5-9
Flash Memory 5-9
Series 90-30 CPU Capacities 5-10
User Memory Addresses (References) 5-10
Difference Between a Memory Address and a Nickname 5-10
User Memory Reference Types 5-11
Application Program Compatibility 5-12
CPU Time-of-Day (TOD) Clock Accuracy 5-12
Breakfree SNP Protocol 5-13
350–374 CPUs 5-13
Compatibility With Hand-Held Programmer (HHP) and Memory Card 5-13
350–374 CPU Advanced Features 5-14
Details of 350 – 374 CPU Advanced Features 5-14
Hardware Features of the 350–364 CPUs 5-18
CPU350 and CPU360 Hardware Features 5-18
CPU Firmware Upgrade 5-18
CPU351, CPU352, and CPU363 Hardware Features 5-19
CPU Firmware Upgrade 5-19
Keyswitch 5-19
Shield Ground Connection Tab 5-20
Serial Ports 5-20
Serial Port Front Panel Connectors 5-20
Serial Port Status LEDs 5-20
Protocols Supported 5-21
Pin Assignments for CPU351, CPU352, and CPU363 Serial Ports 1 & 2 5-22
CPU364 Hardware Features 5-23
LED Indicators 5-23
Ethernet Restart Pushbutton 5-23
Keyswitch 5-24
Front Panel Connectors 5-24
Shield Ground Connection Tab 5-24
Firmware Upgrade 5-24
CPU374 Hardware Features 5-25
LED Indicators 5-25
Ethernet Restart Pushbutton 5-25
Keyswitch 5-26
Front Panel Connectors 5-26
Shield Ground Connection Tab 5-26
Firmware Upgrade 5-26
CPU Data Sheets 5-27
CPU311 Catalog Number IC693CPU311 5-28
CPU313 Catalog Number IC693CPU313 5-29
CPU323 Catalog Number IC693CPU323 5-30
CPU331 Catalog Number IC693CPU331 5-31

Contents

CPU340 Catalog Number IC693CPU340 5-32
CPU341 Catalog Number IC693CPU341 5-33
CPU350 Catalog Number IC693CPU350 5-34
CPU351 Catalog Number IC693CPU351 5-35
CPU352 Catalog Number IC693CPU352 5-36
CPU360 Catalog Number IC693CPU360 5-37
CPU363 Catalog Number IC693CPU363 5-38
CPU364 Catalog Number IC693CPU364 5-39
CPU374 Catalog Number IC693CPU374 5-40

Chapter 6 Memory Backup/Battery Backup 6-1

Backup Battery for RAM Memory (All Supplies) 6-1
Battery Replacement Instructions 6-2
Battery Replacement/Memory Protection Factors 6-3
The Importance of Backing up Your Program 6-3
Factors Affecting Battery Life 6-4
Low Battery Warning Methods 6-4
Operating Without a Memory Backup Battery 6-6
RAM Memory Battery Backup Connection Path 6-8
Super Capacitor Memory Backup 6-8
Maintaining RAM Memory During Storage or Shipment of a CPU 6-9
Modular CPUs 6-9
Embedded CPUs 6-9
Battery Accessory Kit (IC693ACC315) 6-9
Battery Accessory Kit Installation 6-10
External Battery Module (IC693ACC302) 6-10
Batteries in Power Supplies on Expansion or Remote Racks 6-11

Chapter 7 Input/Output Modules 7-1

Basic I/O Module Types 7-1
Discrete I/O Modules 7-2
Discrete I/O Module Point Density 7-2
Standard Density Discrete I/O Module Features 7-2
Wiring Standard Density (16-Point or Less) Discrete Modules 7-4
Discrete Relay Output Module Protection 7-4
High Density (32-Point) Discrete Module Features 7-4
Wiring Methods for 32-Point Discrete I/O Modules 7-6
Modules with Single 50-Pin Connector 7-6
Modules with Dual 24-Pin Connectors 7-7
Analog Module Features 7-8
Wiring Methods for Analog Modules 7-9
Analog Input Module Wiring Methods 7-9
Analog Output Module Wiring 7-10
I/O Module Power Supply Current Draw 7-10

Contents

I/O Module Wire Routing 7-11
Grouping Modules to Keep Wires Segregated 7-11
IC693DVM300 Digital Valve Driver Module 7-12
Indicator LEDs 7-12
DVM Specifications 7-13
Fuses 7-13

Chapter 8 Option Modules 8-1

Third-Party Option Modules and the Accompany Program 8-1
Option Modules Discussed in this Chapter 8-1
IC693CMM301 Genius Communications Module (GCM) 8-2
Status LEDs 8-3
GCM Documentation 8-3
IC693CMM302 Enhanced Genius Communications Module (GCM+) 8-4
Status LEDs 8-5
GCM+ Documentation 8-5
IC693BEM331 Genius Bus Controller (GBC) 8-6
Number of Genius Bus Controllers 8-7
Status LEDs 8-7
Compatibility 8-7
Series 90-30 PLC 8-7
Series Six PLC 8-7
Genius Hand-Held Monitor 8-8
Hand-Held Programmer 8-8
Genius I/O Blocks 8-8
Genius Bus 8-8
Diagnostics 8-8
Datagrams 8-9
Global Data 8-9
Sending Global Data 8-9
Receiving Global Data 8-9
Genius Bus Controller Documentation 8-9
IC693BEM340 FIP Bus Controller (FBC) Module 8-10
Status LEDs 8-11
Serial Port 8-11
FIP Bus Connectors 8-11
IC693BEM330 FIP Remote I/O Scanner Module 8-12
Features of the Remote I/O Scanner 8-12
FIP Bus Interface 8-13
Module Description 8-13
Connectors 8-14
LEDs 8-14
FIP Remote I/O Scanner Documentation: 8-14
IC693APU301/302 Motion Mate Axis Positioning Module (APM) 8-15

Contents

APM Cables 8-16
Motion Mate APM Module Documentation 8-16
IC693DSM302 Motion Mate Digital Servo Module (DSM302) 8-17
Features. 8-18
IC693DSM302 Documentation 8-18
IC693DSM314 Motion Mate Digital Servo Module (DSM314) 8-20
Features 8-21
IC693DSM314 Documentation 8-22
IC693APU300 High Speed Counter (HSC) Module 8-23
IC693BEM320 I/O LINK Interface (Slave) Module 8-24
IC693BEM321 I/O LINK Master Module 8-25
Compatibility 8-26
IC693APU305 I/O Processor Module 8-27
Module Features 8-28
IC693CMM321 Ethernet Interface Module 8-29
IC693PCM300/301/311 Programmable Coprocessor Module (PCM) 8-31
IC693CMM311 Communications Coprocessor Module (CMM) 8-34
IC693ADC311 Alphanumeric Display Coprocessor (ADC) 8-35
IC693TCM302/303 Temperature Control Modules (TCM) 8-37
Connections 8-37
LED Indicators 8-38
Internal Fuse 8-38
Automatic Data Transfers Between TCM and PLC 8-38
Comparison of TCM302 and TCM303 Modules 8-39
IC693PTM100/101 Power Transducer (PTM) 8-40
Difference Between PTM100 and PTM101 8-40
Capabilities 8-40
Operating Modes 8-40
Automatic Data Transfers Between PTMPM and PLC 8-41
Compatibility 8-41
Dimensions 8-42
PTMPM Indicator LEDs 8-42
General Mounting Information 8-42
Baseplate Type and Allowable Number of PTMPM Modules 8-43
Power Supply Requirement 8-43
Memory Requirement 8-43
Configuration 8-43
Ordering Information 8-43
Documentation 8-43

Chapter 9 State Logic Products 9-1

State Logic Overview 9-1
State Logic Products 9-1
Baseplates and Power Supply, I/O, and Option Modules 9-1

Contents

AD693CMM301 State Logic Serial Communications Module (SCM) 9-2
Description 9-2
OK LED 9-2
Reset Button 9-2
Serial Connector 9-3
Cable Information 9-3
State Logic SCM Documentation 9-3
IC693SLP300 State Logic Processor Module 9-4
Description 9-4
SLP Features 9-5
Memory 9-5
Installation 9-5
Status Light 9-6
Pushbutton 9-6
Battery 9-7
Cable Information 9-7
Hardware Specifications 9-7
State Logic Processor (SLP) Documentation 9-7
State Logic CPUs 9-8
Features of State Logic CPUs 9-8
Model CSE311, CSE313 and CSE323 Embedded CPU Baseplates 9-9
Model CSE331 and CSE340 Modular CPUs 9-10
CPU Serial Port Connector on Power Supply 9-11
Configuring the State Logic CPUs 9-11
State Logic CPU Firmware and PROM Configurations 9-13
State Logic CPU Data Sheets 9-13
CSE311 Catalog Number IC693CSE311 9-14
CSE313 Catalog Number IC693CSE313 9-15
CSE323 Catalog Number IC693CSE323 9-16
CSE331 Catalog Number IC693CSE331 9-17
CSE340 Catalog Number IC693CSE340 9-18

Chapter 10 Cables 10-1

Cable Data Sheets 10-7
IC647CBL704 Workstation Interface to Series 90 CPU (SNP Port) Cable 10-8
Function of cable 10-8
IC690CBL701 PCM, ADC, CMM to Workmaster (PC-XT) Cable 10-12
Function of cable 10-12
Cable Specifications 10-12
Wiring Diagram 10-12
PCM to Programmer Cable Installation 10-13
IC690CBL702 PC-AT to PCM, ADC, CMM Cable 10-14
Function of cable 10-14
Cable Specifications 10-14

Contents

Wiring Diagram 10-14
PCM to Programmer Cable Installation 10-15
IC690CBL705 Workmaster II (PS/2) to PCM, ADC, CMM Cable 10-16
Function of cable 10-16
Cable Specifications 10-16
Wiring Diagram 10-16
PCM to Programmer Cable Installation 10-17
IC690CBL714A Multidrop Cable 10-18
Purpose 10-18
Specifications 10-18
IC690CBL714A Multi-Drop Cable Wiring Diagram 10-19
Connection Diagrams for IC690CBL714A Cable 10-20
IC693CBL300/301/302/312/313/314 I/O Bus Expansion Cables 10-22
Description 10-22
Cable Lengths 10-22
Function of Cables 10-22
Connecting the Cables 10-23
Important Notes About I/O Bus Expansion Cables 10-23
Cable Application Suggestions 10-23
Using Standard Cables 10-23
Using Custom Built cables 10-24
Building Custom Length I/O Bus Expansion Cables 10-24
Two Types of Custom Built Cables 10-24
Components Needed to Build Custom Length I/O Bus Expansion Cables 10-24
Expansion Port Pin Assignments 10-25
I/O Expansion Bus Termination 10-25
Shield Treatment 10-26
Alert for Users of Early Remote Baseplate Versions 10-26
Making a 100% Shielded Cable 10-27
Wiring Diagrams 10-28
Application Examples 10-31
Expansion System Cable Connections 10-31
Remote and Expansion System Cable Connection Example 10-31
IC693CBL303 Hand-Hand Programmer and Converter (IC690ACC900) Cable 10-33
Function of cable 10-33
Cable Specifications 10-33
Wiring Diagram 10-34
Connecting the Cable 10-34
IC693CBL304/305 Port Expansion (WYE) Cables for PCM, ADC, and CMM 10-35
Function of cable 10-35
Cable Specifications 10-35
Wiring Information 10-36
IC693CBL306/307 Extension Cables (50-Pin) for 32 Point Modules 10-38
Function of cable 10-38
Cable Specifications 10-38
IC693CBL308/309 I/O Cables (50-Pin) for 32 Point Modules 10-40
Specifications 10-40
Wiring Information 10-40

Contents

IC693CBL310 I/O Interface Cable (24-Pin) for 32 Point Modules 10-42
Function of cable 10-42
Replacement/Obsolescence Information 10-43
Connector Depth for Cable IC693CBL310 10-43
IC693CBL311/317/319/320 I/O Interface Cables for Power Mate APM Modules 10-45
Function of cable 10-45
Specifications 10-45
Wiring Information 10-46
IC693CBL315 I/O Interface Cable (24-Pin) for 32 Point Modules 10-49
Function of cable 10-49
Building Custom Length Cables for 24-Pin Connectors 10-49
Replacement/Obsolescence Information 10-51
Connector Depth for IC693CBL315 10-51
IC693CBL316 Serial Cable, 9-Pin D-Shell to RJ-11 Connector 10-53
Description 10-53
Typical Applications 10-53
IC693CBL321/322/323 I/O Faceplate Connector to Terminal Block Connector, 24-Pin 10-54
Function of cable 10-54
Cable Specifications 10-54
Connector Depth 10-55
IC693CBL327/328 I/O Interface Cables with Right Angle 24-Pin Connector 10-57
Description 10-57
Applications 10-57
Specifications 10-58
Connector Depth for Cables IC693CBL327/328 10-58
Building Custom Length 24-pin Connector Cables 10-59
Connector Depth for Custom Built Cables 10-60
Possible Uses for These Cables (Factory or Custom Built) 10-61
IC693CBL329/330/331/332/333/334 Cables 24-Pin I/O Faceplate Connector to Terminal Block Connector 10-62
Description 10-62
Connector Depth 10-63
Applications 10-64
IC693CBL340/341 PTM Interface Cables 10-65
Documentation 10-67

Chapter 11 Programmer Hardware Products 11-1

Products Discussed in this Chapter 11-1
IC640WMI310/320 Work Station Interface Boards 11-2
Replacing Workmaster Computers 11-3
IC690ACC900 RS-422/RS-485 to RS-232 Converter 11-3
IC690ACC901 Miniconverter Kit 11-4
IC693PRG300 Hand-Held Programmer (HHP) 11-5
HHP Features 11-6

Contents

HHP Memory Card (IC693ACC303) 11-6
HHP Modes of Operation 11-6
Documentation 11-6
IC693PIF301/400 Personal Computer Interface (PCIF) Cards 11-7
IC655CCM590 Isolated Repeater/Converter 11-8
IC690ACC903 Port Isolator 11-8

Chapter 12 System Design 12-1

Introduction 12-1
Step 1: Planning Your System 12-1
Step 2: Determining I/O Requirements 12-1
Additional I/O Module Selection Factors 12-2
Step 3: Selecting Option Modules 12-2
Step 4: Selecting a CPU 12-4
Step 5: Selecting Baseplates 12-5
Step 6: Selecting Power Supplies 12-6
Reducing PLC Module Count by Using Other GE Fanuc Products 12-7
Designing For Safety 12-8
Protection From Electrical Shock 12-8
Fire Prevention 12-8
Protection From Mechanical Hazards 12-8
Protection From Electrical Failure 12-8
Protection From Design Changes or Overrides 12-9
Safety Documentation 12-10
Guarding Against Unauthorized Operation 12-10
Labeling, Guarding, and Lighting Issues 12-10
Equipment Accessibility Issues 12-10
Number of Modules Per Series 90-30 PLC System 12-11
Calculating Power Supply Loading 12-12
Load Requirements for Hardware Components 12-12
Power Supply Loading Calculation Examples 12-14
Scan (Sweep) Time Calculation 12-15
Major Design Factors Affecting Scan Time 12-16
Where to Find Scan Time Information 12-16
Calculating PLC Heat Dissipation 12-17
System Layout Guidelines 12-17
Benefits of a Good Layout - Safe, Reliable, and Accessible 12-17
PLC Rack Location and Clearance Requirement 12-17
Location of Modules in the PLC Racks 12-18
Allowable Module Locations 12-19
Series 90-30 PLC Layout Example 12-20
PLC Mounting Position 12-21
Recommended Upright Mounting Orientation 12-21
Derated Horizontal Mounting Orientation 12-21

Contents

Chapter 13 Maintenance and Troubleshooting 13-1

Troubleshooting Features of Series 90-30 Hardware 13-1
Indicator Lights (LEDs) and Terminal Board 13-1
Module LED Indicators 13-2
Troubleshooting Features of Programming Software 13-3
Ladder Screens 13-3
Configuration Screens 13-3
Fault Tables 13-3
System Status References 13-3
Reference Tables 13-4
Override feature 13-4
Sequential Event Recorder (SER), DOIO functional instruction 13-4
Replacing Modules 13-5
Series 90-30 Product Repair 13-5
Module Fuse List 13-6
Spare/Replacement Parts 13-7
Preventive Maintenance Suggestions 13-8
Getting Additional Help and Information 13-9

Appendix A Serial Ports and Cables A-1

RS-422 Interface A-1
Cable and Connector Specifications A-2
Series 90 PLC Serial Port A-3
Workmaster Serial Port A-4
RS-232/RS-485 Converter A-7
IC690ACC901 Miniconverter Kit A-7
IC690ACC900 Obsolete Converter A-7
Serial Cable Diagrams A-8
RS-232 Point-to-Point Connections A-8
RS-422 Point-to-Point Connection A-10
Multidrop Connections A-10

Appendix B IC690ACC900 Converter B-1

Features B-1
Functions B-1
Location in System B-2
Installation B-2
Cable Description B-3
RS-232 Interface Pin Assignments B-4
RS-422/RS-485 Interface Pin Assignments B-5
Logic Diagram B-6
Jumper Configuration B-7

Contents

Example of Cable Configurations B-9

Appendix C IC655CCM690 Isolated Repeater/Converter C-1

Description of the Isolated Repeater/Converter C-1
Logic Diagram of the Isolated Repeater/Converter C-3
Pin Assignments for the Isolated Repeater/Converter C-4
System Configurations C-5
Simple Multidrop Configuration C-6
Complex Multidrop Configuration C-6
Rules for Using Repeater/Converters in Complex Networks C-7
Cable Diagrams C-8

Appendix D IC690ACC901 Miniconverter Kit D-1

Description of Miniconverter D-1
Pin Assignments D-2
Pin Assignments, RS-232 Port D-2
Pin Assignments, RS-422 Port D-2
System Configurations D-3
Cable Diagrams (Point-To-Point) D-3

Appendix E IC690ACC903 Port Isolator E-1

Connectors E-2
Logic Diagram E-3
Installation E-4
Specifications E-7

Appendix F Calculating Series 90-30 Heat Dissipation F-1

Overview F-1
Information Required F-1
Procedure F-2
Step 1: Basic Method to Calculate Module Dissipation F-2
Step 2: Calculation for PLC Power Supplies F-3
Step 3: Output Calculations for Discrete Output Modules F-3
Step 4: Input Calculations for Discrete Input Modules F-4
Step 5: Final Calculation F-6
Other Information Related to Enclosure Sizing F-6

Appendix G Catalog Number to Publication Cross-Reference G-1

General System Information G-2
Analog I/O Modules G-2
Baseplates G-2
Communications Modules G-3

Contents

CPU Modules, CPU311-CPU341 ..... G-3
CPU Modules, CPU350 - CPU374 ..... G-4
Digital Valve Driver Module G-5
Discrete I/O Modules G-5
Genius Modules G-6
Motion Modules G-6
Other Option Modules G-6
Power Supply Modules G-7
Programming Device G-7
State Logic Products G-7
Publication Revision Letters G-8
Other Sources of Information G-8

Appendix H Terminal Block Quick Connect Components H-1

Terminal Block Quick Connect Components for 16-Point Modules H-2
Terminal Blocks H-2
Cable Current Rating H-2
Cable Selection and Cross-Reference H-3
I/O Face Plate for 16-Point Modules H-3
I/O Face Plate Installation H-3
Module Wiring Information H-4
Cable Information H-4
Connector Pin Orientation and Connection to Module Terminal H-5
Terminal Block Information H-5
IC693ACC329 TBQC Terminal Block H-6
IC693ACC330 TBQC Terminal Block H-7
IC693ACC331 TBQC Terminal Block H-8
IC693ACC332 TBQC Terminal Block H-9
IC693ACC333 TBQC Terminal Block H-10
Terminal Block Quick Connect Components for 32-Point Modules H-11
Terminal Block H-12
Cable Selection and Cross-Reference H-12
Cable Current Rating H-12
Cable Data H-13
Terminal Block Data H-13
IC693ACC337 TBQC Terminal Block H-13

Appendix I SNP Multidrop I-1

SNP Multidrop Overview I-1
Multidrop Cables I-2
Limitations I-2
Cable and Connector Specifications I-2
MultiDrop Cable Wiring Diagram I-3

Contents

SNP Multidrop Examples I-4
Configuring and Connecting a Programmer to a Multidrop Network I-5
Assigning a PLC SNP ID to a PLC with Logicmaster I-6
Connecting your Logicmaster Programmer to a PLC on a Multidrop System I-6
SNP Multidrop Troubleshooting I-7

Appendix J Ethernet Transceivers J-1

IC649AEA102 Ethernet 10BASE-T Transceiver J-1
Power Requirement J-1
LED Indicator Lights J-1
IC649AEA103 Ethernet 10BASE2 Transceiver J-2
Power Requirement J-2
LED Indicator Light J-2

Appendix K Tables and Formulas K-1

AWG to Metric Wire Size Conversion K-2
Temperature Conversion K-3
Formulas K-3
Conversion Information K-4
English and Metric Equivalents K-5

Appendix L 44A420084-001 EMI Line Filter L-1

44A720084-001 Optional EMI Line Filter L-1
44A720084-001 Line Filter Mounting Dimensions L-3

Contents

Figure 1-1. Five-Slot CPU Baseplate 1-3
Figure 1-2. Power Supply Module 1-3
Figure 1-3. CPU Module 1-4
Figure 1-4. I/O Module 1-4
Figure 1-5. Assembling the System 1-5
Figure 1-6. A Basic System 1-6
Figure 1-7. Ten-Slot Rack 1-6
Figure 1-8. I/O Bus Expansion Cable 1-7
Figure 1-9. Connecting Expansion and Remote Baseplates 1-8
Figure 1-10. Connecting PLCs Using GBC or CMM Modules 1-9
Figure 2-1. Features of Series 90-30 Module 2-2
Figure 2-2. Installing a Module 2-3
Figure 2-3. Removing a Module 2-4
Figure 2-4. Installing an I/O Module's Terminal Board 2-5
Figure 2-5. Removing a Module's Terminal Board 2-6
Figure 2-6. Terminal Board with Holding Screws 2-7
Figure 2-7. IC693ACC308 Front Mount Adapter Bracket Installation 2-9
Figure 2-8. Dimensions for 19-inch Rack Mounting Using IC693ACC308 Adapter Bracket 2-9
Figure 2-9. IC693ACC313 Recessed Mount Adapter Bracket 2-10
Figure 2-10. Recommended System Grounding 2-11
Figure 2-11. Baseplate Grounding 2-12
Figure 2-12. CPU 351 or 352 - Attaching Shield Ground Wire 2-14
Figure 2-13. CPU 351 or 352 - Mounting the Shield Grounding Bracket and Wire 2-15
Figure 2-14. CPU 363, CPU364, or CPU374 - Attaching Ground Wire 2-16
Figure 2-15. Power Supply Terminal Boards 2-24
Figure 2-16. Overvoltage Protection Devices and Jumper Strap 2-24
Figure 3-1. Common Baseplate Features 3-2
Figure 3-2. Models IC693CPU311 and IC693CPU313 (5-Slot) Embedded CPU Baseplates 3-5
Figure 3-3. Model IC693CPU323 (10-slot) Embedded CPU Baseplate 3-5
Figure 3-4. IC693CHS397 5-Slot Modular CPU Baseplate 3-6
Figure 3-5. IC693CHS391 10-Slot Modular CPU Baseplate 3-6
Figure 3-6. IC693CHS398 5-Slot Expansion Baseplate 3-7
Figure 3-7. IC693CHS392 10-Slot Expansion Baseplate 3-8
Figure 3-8. IC693CHS399 5-Slot Remote Baseplate 3-9
Figure 3-9. IC693CHS393 10-Slot Remote Baseplate 3-9
Figure 3-10. I/O Bus Expansion Cables 3-10

Contents

Figure 3-11. Rack Number Selection Switch (Shown with Rack 2 Selected) 3-13
Figure 3-12. Example of Connecting Expansion Baseplates 3-14
Figure 3-13. Example of Connecting Expansion and Remote Baseplates 3-15
Figure 3-14. Model 311 and 313 5-Slot Baseplate Dimensions and Spacing Requirements 3-16
Figure 3-15. Model 323 10-Slot Baseplate Dimensions and Spacing Requirements 3-17
Figure 3-16. Modular CPU, Expansion, and Remote 5-Slot Baseplate Dimensions and Spacing Requirements 3-18
Figure 3-17. Modular CPU, Expansion, and Remote 10-Slot Baseplate Dimensions and Spacing Requirements 3-18
Figure 3-18. IC693ACC308 Front Mount Adapter Bracket Installation 3-20
Figure 3-19. Dimensions for 19″ Rack Mounting Using IC693ACC308 Adapter Bracket 3-21
Figure 3-20. IC693ACC313 Recessed Mount Adapter Bracket 3-21
Figure 4-1. Standard AC/DC Input Power Supply - IC693PWR321 4-2
Figure 4-2. High Capacity AC/DC Input Power Supply - IC693PWR330 4-4
Figure 4-3. Overvoltage Protection Devices and Jumper Strap 4-6
Figure 4-4. Series 90-30 24/48 VDC Input Power Supply - IC693PWR322 4-7
Figure 4-5. Typical Efficiency Curve for 24/48 VDC Power Supply 4-8
Figure 4-6. Series 90-30 48 VDC Input Power Supply - IC693PWR328 4-10
Figure 4-7. Typical Efficiency Curve for IC693PWR328 Power Supply 4-11
Figure 4-8. Series 90-30 24 VDC Input High Capacity Power Supply - IC693PWR331 4-13
Figure 4-9. 5 VDC Current Output Derating for Temperatures above 50°C (122°F) 4-14
Figure 4-10. Overvoltage Protection Devices and Jumper Strap 4-17
Figure 4-11. Interconnection of Power Supplies 4-17
Figure 4-12. Timing Diagram for all Series 90-30 Power Supplies 4-18
Figure 4-13. Serial Port Connector 4-19
Figure 4-14. Backup Battery for RAM Memory 4-20
Figure 5-1. Models 311 and 313 (5-Slot) Embedded CPU Baseplates 5-2
Figure 5-2. IC693CHS397 5-Slot Modular CPU Baseplate 5-3
Figure 5-3. CPU Serial Port Connector on Power Supply 5-4
Figure 5-4. CPUs 351, 352, and 363 5-19
Figure 6-1. Backup Battery for RAM Memory 6-1
Figure 6-2. Installing the Battery Accessory Kit 6-10
Figure 7-1. Example of Series 90-30 Standard Density Discrete Output Module 7-3
Figure 7-2. Example of 32-Point I/O Module (IC693MDL654) With Dual Connectors 7-5
Figure 7-3. Example of 32-Point I/O Module (IC693MDL653) With Single Connector 7-5
Figure 7-4. 50-PIN, 32 Point I/O Module Connection Method 7-6
Figure 7-5. Example of Series 90-30 Analog Current Output Module 7-9
Figure 7-6. IC693DVM300 Digital Valve Driver Module 7-12

Contents

Figure 8-1. The IC693CMM301 GCM Module 8-2
Figure 8-2. Genius Bus Wiring Schematic 8-3
Figure 8-3. Example of Genius Communications Network 8-3
Figure 8-4. Enhanced Genius Communications Module 8-4
Figure 8-5. Genius Bus Controller Module 8-6
Figure 8-6. Example of FIP I/O System Configuration 8-10
Figure 8-7. Series 90-30 FIP Bus Controller 8-11
Figure 8-8. Example of FIP Remote I/O Scanner System Configuration 8-12
Figure 8-9. FIP Bus Interface Module 8-13
Figure 8-10. Motion Mate APM Module 8-15
Figure 8-11. Example of Motion Mate APM Servo System 8-16
Figure 8-12. Motion Mate DSM302 Module 8-17
Figure 8-13. Motion Mate DSM314 Module 8-20
Figure 8-14. High Speed Counter (HSC) 8-23
Figure 8-15. Example of a Series 90-30 PLC in a Fanuc I/O LINK Configuration 8-24
Figure 8-16. Example of I/O LINK Master System Configuration 8-25
Figure 8-17. I/O Processor Module 8-27
Figure 8-18. Ethernet Interface Module 8-29
Figure 8-19. Programmable Coprocessor Module (PCM) 8-31
Figure 8-20. Communications Control Module 8-34
Figure 8-21. Alphanumeric Display Coprocessor Module (ADC) 8-35
Figure 8-22. IC693TCM302/303 Temperature Control Module (TCM) 8-37
Figure 8-23. IC693PTM100/101 Components 8-41
Figure 8-24. IC693PTM100/101 Component Mounting 8-42
Figure 9-1. AD693CMM301 State Logic Serial Communications Module 9-2
Figure 9-2. IC693CBL305 WYE Cable 9-3
Figure 9-3. IC693SLP300 State Logic Processor Module for Series 90-30 9-4
Figure 9-4. State Logic Processor Module User Details 9-6
Figure 9-5. Model CSE311 or CSE313 5-Slot Embedded CPU Baseplate 9-9
Figure 9-6. Model CSE323 10-Slot Embedded CPU Baseplate 9-9
Figure 9-7. CPU Models CSE 331 or CSE 340 9-10
Figure 9-8. Serial Port Connector 9-11
Figure 10-1. Serial Port to Work Station Interface Board Cable Connection 10-8
Figure 10-2. Series 90 PLC to Workmaster II Serial Cable 10-9
Figure 10-3. Example of Multidrop Configuration with Converter 10-10
Figure 10-4. Series 90 PLC to Programmer 8-Wire Multidrop, Serial Data Configuration 10-11
Figure 10-5. PCM, ADC, or CMM to Workmaster or PC-XT Serial Cable 10-12

Contents

Figure 10-6. PCM to Workmaster Computer or PC-XT Personal Computer 10-13
Figure 10-7. PCM, ADC, or CMM to Workmaster or PC-AT Serial Cable 10-14
Figure 10-8. PCM to PC-AT Personal Computer 10-15
Figure 10-9. PCM, ADC, or CMM to Workmaster II or PS/2 Serial Cable 10-16
Figure 10-10. PCM to Workmaster II Computer or PS/2 Computer 10-17
Figure 10-11. Connecting Diagram for Multidrop Cable IC690CBL714A 10-19
Figure 10-12. Multidrop Arrangement for Series 90-30 Redundant System 10-20
Figure 10-13. Connecting CPU and APM to Programmer with IC690CBL714A Cable 10-20
Figure 10-14. Multidrop Arrangement for Series 90-70 TMR Redundant System 10-21
Figure 10-15. Detail of I/O Bus Expansion Cables 10-22
Figure 10-16. How to use Split-Ring Ferrules for Foil and Braided Cable Shield 10-26
Figure 10-17. Point-To-Point Cable Wiring for Continuous Shield Custom Length Cables 10-28
Figure 10-18. Point-To-Point Cable Wiring Diagram for Applications Requiring Less Noise Immunity 10-28
Figure 10-19. Earlier Versions of Remote Baseplate Custom WYE Cable Wiring Diagram 10-29
Figure 10-20. Current Remote baseplate (IC693CHS393/399) Custom Wye Cable Wiring Diagram 10-30
Figure 10-21. Example of Connecting Expansion Baseplates 10-31
Figure 10-22. Example of Connecting Expansion and Remote Baseplates 10-32
Figure 10-23. Wiring Connections for IC693CBL303 and Custom-Built Cables 10-34
Figure 10-24. Hand-Held Programmer Cable Connection to a Series 90-30 PLC 10-34
Figure 10-25. Wye Cable 10-35
Figure 10-26. Wye Cable Connections 10-36
Figure 10-27. 32 Point I/O Module to Weidmuller Terminal Block Assembly 10-39
Figure 10-28. IC693CBL310 Cable 10-42
Figure 10-29. Dimensions for Depth of Connector in front of PLC 10-44
Figure 10-30. I/O Connector Cable Specifications 10-45
Figure 10-31. IC693CBL315 Cable 10-49
Figure 10-32. Dimensions for Depth of Connector in front of PLC 10-52
Figure 10-33. IC693CBL316A Serial Cable Illustration and Connector Pinouts 10-53
Figure 10-34. Connector Orientation on I/O Faceplate 10-55
Figure 10-35. I/O Faceplate to Terminal Block Cable 10-55
Figure 10-36. Dimensions for Depth of Connector in front of PLC 10-56
Figure 10-37. C693CBL327/328 Cables 10-57
Figure 10-38. Dimension for Depth of Connector for IC693CBL327/328 10-58
Figure 10-39. Dimensions for Depth of Connector in front of PLC for Custom Built Cables 10-61
Figure 10-40. IC693CBL329/330/331/332/333/334 Cables 10-62
Figure 10-41. Dimension for Depth of Connector 10-63
Figure 10-42. Figure IC693CBL340/341 PTM Interface Cables 10-65

Contents

Figure 10-43. PTM Component Mounting and Cable Connection 10-65
Figure 11-1. WSI Board for the Workmaster II Computer 11-2
Figure 11-2. Location of WSI in a Series II 90-30 PLC System 11-2
Figure 11-3. Example of IC690ACC900 Converter Connection 11-3
Figure 11-4. IC690ACC901 Series 90 SNP Port to RS-232 Adapter 11-4
Figure 11-5. Hand-Held Programmer for the Series 90-30 PLC 11-5
Figure 11-6. Example of PCIF Interface to Series 90-30 I/O 11-7
Figure 12-1. Hard-Wired MCR Circuit Example 12-9
Figure 12-2. Allowable Location of Modules 12-19
Figure 12-3. Series 90-30 Example Layout 12-20
Figure 12-4. Recommended PLC Mounting Orientation 12-21
Figure 12-5. Derated PLC Mounting Orientation 12-21
Figure 13-1. Relationship of Indicator Lights to Terminal Board Connections 13-1
Figure A-1. Series 90 PLC, RS-422 Serial Port Connector Configuration A-3
Figure A-2. Workmaster RS-232 Serial Port Connector Configuration A-4
Figure A-3. IBM-AT/XT Serial Port A-5
Figure A-4. IBM-AT (compatibles) Personal Computer to Series 90 PLCs A-9
Figure A-5. Workmaster or IBM-XT (compatibles) Personal Computer to Series 90 PLCs A-9
Figure A-6. Typical RS-422, Host to PLC Connection, with Handshaking A-10
Figure A-7. Workmaster II/Series 90 PLC Multidrop Connection A-11
Figure A-8. Workmaster/Series 90 PLC Multidrop Connection A-12
Figure A-9. IBM-AT/Series 90 PLC Multidrop Connection A-12
Figure A-10. IBM-XT/Series 90 PLC Multidrop Connection A-13
Figure B-1. Front and Rear View of Converter B-2
Figure B-2. Typical Configuration with Series 90-70 PLC B-3
Figure B-3. Typical Configuration with Series 90-30 PLC B-4
Figure B-4. RS-422/RS-485 to RS-232 Converter Logic Diagram B-6
Figure B-5. Location of Jumpers for User Options B-7
Figure C-1. Isolated/Repeater Converter C-2
Figure C-2. RS-422 Isolated Repeater/RS-232 Converter Logic Diagram C-3
Figure C-3. Example RS-422 Isolated Repeater/RS-232 Converter Connection C-5
Figure C-4. Simple System Configuration Using the Isolated Repeater/Converter C-6
Figure C-5. Complex System Configuration Using the Isolated Repeater/Converter C-6
Figure C-6. Cable A; RS-232 CMM To Converter C-8
Figure C-7. Cable B; RS-422 CMM To Converter C-8
Figure C-8. Cable C; RS422 Twisted Pair C-9
Figure C-9. Cable D; RS-422 Twisted Pair C-10

Contents

Figure C-10. Cable E; RS-232 Converter to CMM C-10
Figure D-1. Series 90 SNP to RS-232 Miniconverter D-1
Figure D-2. Miniconverter to PC-AT D-3
Figure D-3. Miniconverter to Workmaster II, PC-XT, PS/2 ..... D-3
Figure D-4. Miniconverter to 9-Pin Workmaster or PC-XT Computer D-4
Figure E-2. IC690ACC903 Block Diagram E-3
Figure E-3. RS-485 Port Isolator in PLC Network E-4
Figure E-4. Mounting Port Isolator to Panel E-4
Figure E-5. Multidrop Configuration Connecting Devices with 15-Pin Ports and 25-Pin Ports E-5
Figure E-6. Cable for Supplying External Power Through the Port Isolator E-6
Figure H-1. Typical TBQC Terminal Block H-1
Figure H-2. TBQC Faceplate H-5
Figure H-3. IC693ACC329 TBQC Terminal Block H-6
Figure H-4. IC693ACC330 TBQC Terminal Block H-7
Figure H-5. IC693ACC331 TBQC Terminal Block H-8
Figure H-6. IC693ACC332 TBQC Terminal Block H-9
Figure H-7. IC693ACC333 TBQC Terminal Block H-10
Figure H-8. IC693MDL654 32-Point Module H-11
Figure H-9. IC693ACC337 TBQC Terminal Block H-13
Figure I-1. Series 90-30 Multidrop Example I-1
Figure I-2. Multidrop Cable Wiring Diagram I-3
Figure I-3. Connecting CPU and APM to Programmer with IC690CBL714A Cable I-4
Figure I-4. Multidrop Arrangement for Series 90-70 TMR Redundant System I-4
Figure I-5. Multidrop Arrangement for Series 90-30 Redundant System I-5
Figure J-1. IC649AEA102 Ethernet 10BASE-T Transceiver J-1
Figure J-2. IC649AEA103 Ethernet 10BASE2 Transceiver J-2
Figure L-1. 44A720084-001 Line Filter Connections to Series 90-30 Power Supply L-2
Figure L-2. Equivalent Circuit for 44A720084-001 Line Filter L-2
Figure L-3. 44A720084-001 Line Filter Mounting Dimensions L-3

Contents

Table 3-1. Rack Number Selection Switch Settings 3-13
Table 3-2. Series 90-30 Baseplate Comparison 3-22
Table 4-1. Power Supply Comparison 4-1
Table 4-2. IC693PWR321 Power Supply Capacities 4-2
Table 4-3. Specifications for IC693PWR321 Standard AC/DC Input Power Supply 4-3
Table 4-4. IC693PWR330 Power Supply Capacities 4-4
Table 4-5. Specifications for IC693PWR330 High Capacity AC/DC Input Power Supply 4-5
Table 4-6. IC693PWR322 Power Supply Capacities 4-7
Table 4-7. Specifications for IC693PWR322 Power Supply 4-8
Table 4-8. IC693PWR328 Power Supply Capacities 4-10
Table 4-9. Specifications for IC693PWR328 Power Supply 4-11
Table 4-10. IC693PWR331 Power Supply Capacities 4-13
Table 4-11. Specifications for IC693PWR331 Power Supply 4-14
Table 5-1. CPU Firmware and PROM Configurations 5-6
Table 5-2. EPROM and EEPROM Catalog Numbers 5-9
Table 5-3. Series 90-30 CPU Capacities 5-10
Table 5-4. Range and Size of User References for CPU Models 311-341 5-11
Table 5-5. Range and Size of User References for CPU Models 350 through 374 5-12
Table 5-6. Port 1 (RS-232) 5-22
Table 5-7. Port 2 (RS-485) 5-22
Table 7-1. IC693DVM300 Specifications 7-13
Table 7-2. IC693DVM300 Connections 7-14
Table 7-3. Series 90-30 Discrete I/O Modules 7-15
Table 7-4. Series 90-30 Analog I/O Modules 7-16
Table 8-1. Comparison of TCM302 and TCM303 8-39
Table 9-1. System Specifications for Series 90-30 State Logic CPUs 9-12
Table 10-1. Series 90-30 Cable Cross-Reference 10-1
Table 10-2. Expansion Port Pin Assignments 10-25
Table 10-3. Wire List for 32 Point I/O Cables 10-40
Table 10-4. Wire List for 24-Pin Connectors 10-43
Table 10-5. Catalog Numbers for 24-Pin Connector Kits 10-46
Table 10-6. I/O Cable Wire Coding for IC693CBL311 and IC693CBL319 10-47
Table 10-7. I/O Cable Wire Coding for IC693CBL317 and IC693CBL320 10-48
Table 10-8. Catalog Numbers for 24-Pin Connector Kits 10-50
Table 10-9. Wire List for 24-Pin Connectors 10-51
Table 10-10. Catalog Numbers for 24-Pin Connector Kits 10-59

Contents

Table 10-11. Wire List for 24-Pin Connectors 10-60
Table 10-12. TBQC Cable Cross-Reference Table 10-63
Table 11-1. Personal Computer Interface Card Comparison Table 11-7
Table 12-1. Power Supply Feature Comparison Table 12-6
Table 12-2. Maximum Number of Modules Per System 12-11
Table 12-3. Load Requirements (in milliamps) 12-12
Table 13-1. Fuse List for Series 90-30 Modules 13-6
Table 13-2. Spare/Replacement Parts 13-7
Table A-1. Connector/Cable Specifications A-2
Table A-2. Series 90 PLC, RS-422 Serial Port Pin-out A-4
Table A-3. Workmaster RS-232 Serial Port Pins-out A-5
Table A-4. IBM-AT/XT Serial Port Pins-out A-6
Table B-1. RS-232 Interface for Converter B-4
Table B-2. RS-422/RS-485 Interface for Converter B-5
Table B-3. Jumper Configuration for RS-422/RS-485 to RS-232 Converter B-8
Table B-4. Specifications for IC690ACC900 Converter B-9
Table C-1. Isolated Repeater/Converter Pin Assignments C-4
Table D-1. Miniconverter RS-232 Port D-2
Table D-2. Miniconverter RS-422 Port D-2
Table D-3. Miniconverter Specifications D-4
RS-485 Connectors E-2
Table H-1. TBQC Terminal Block Selection Table H-2
Table I-1. Connector and Cable Specifications I-2
Table K-1. Standard ASCII (American Standard Code for Information Interchange) Codes K-1
Table K-2. AWG to Metric Wire Size Conversion K-2
Table K-3. Celsius to Fahrenheit Conversion K-3
Table K-4. General Conversions K-4
Table K-5. Length Equivalents K-5
Table K-6. Area Equivalents K-5
Table K-7. Volume Equivalents I K-6
Table K-8. Volume Equivalents II K-6

Chapter 1 Overview of the Series 90-30 PLC

The Series 90™-30 Programmable Logic Controller (PLC) is a member of the GE Fanuc Series 90 PLC family.

The Basic Parts of a Series 90-30 PLC

The Series 90-30 PLC is very versatile because (1) it is programmable, and (2) it is assembled from a wide variety of modular, plug-together components. Therefore, by choosing the correct components and developing an appropriate program, the PLC can be used for an almost unlimited variety of applications. Although there are many choices of individual hardware components to use in a system, there are just a few basic categories. Each of these component categories is covered in detail in a separate chapter in this manual. They are introduced in this chapter so you can see how they fit together:

- Baseplates
- Power Supplies
- CPUs
- I/O Modules
- Option Modules
- Cables

Baseplates

The baseplates are the foundation of the PLC system because most other components mount on them. As a basic minimum, every system has at least one baseplate, which usually contains the CPU (in which case, it is referred to as "the CPU Baseplate"). Many systems require more modules than can be mounted on one baseplate, so there are also Expansion and Remote baseplates that connect together. The three categories of baseplates, CPU, Expansion, and Remote, are available in two sizes, 5-slot and 10-slot, named according to the number of modules they can hold.

Power Supply Modules

Every baseplate must have its own power supply. The power supply always mounts in a baseplate's left-most slot. There are several power supply models available to meet a variety of requirements.

CPUs

The CPU is the manager of the PLC. Every PLC system must have one. A CPU uses the instructions in its firmware and application program to direct the PLC's operation and to monitor the system to make sure there are no basic faults. Some Series 90-30 CPUs are built into baseplates, but most are contained in plug-in modules. In some cases, the CPU resides in a Personal Computer using a Personal Computer Interface Card that interfaces to Series 90-30 Input, Output, and Option modules.

Input and Output (I/O) Modules

These modules enable the PLC to interface with input and output field devices such as switches, sensors, relays, and solenoids. They are available in both discrete and analog types.

Option Modules

These modules extend the capability of the PLC beyond the basic functions. These provide such things as communications and networking options, motion control, high speed counting, temperature control, interfacing to operator interface stations, etc.

Cables

These connect the PLC components together or to other systems. Many standard prefabricated cables are available from GE Fanuc. They are primarily used to:

- Interconnect baseplates
- Connect a programmer to the CPU or to an option module
- Connect option modules to field devices or other systems.

Assembling a Basic Series 90-30 PLC System

Let's assemble, on paper, a basic system using the following components:

- Baseplate
- Power Supply module
- CPU module
- Some I/O modules

We'll start with the **baseplate**. To keep it simple, we'll use a 5-slot size. Note that a 5-slot baseplate actually has six slots, but the power supply slot is not numbered. Note also, that this baseplate has a CPU slot, which is slot number 1, and it has an expansion connector on the right end, which is used for connecting to another baseplate if the system has more than one baseplate.

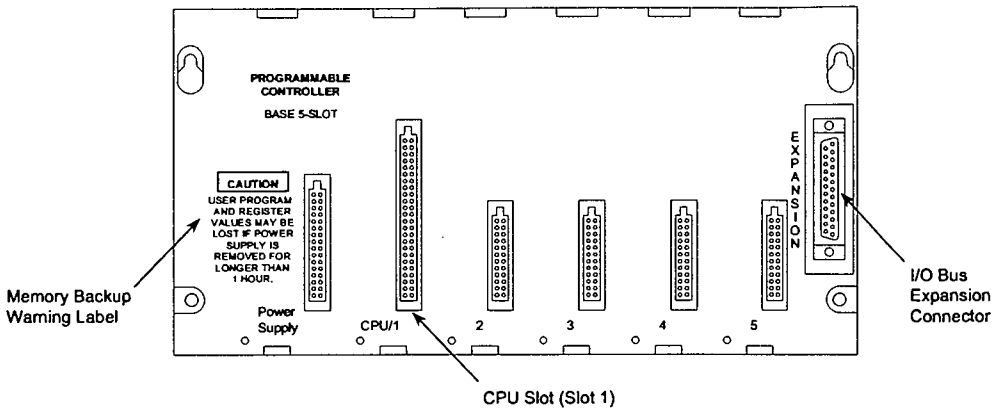

Figure 1-1. Five-Slot CPU Baseplate

Next, we'll add a **power supply** module. It mounts in the unnumbered slot on the left end of the baseplate. This slot has a unique connector that will only fit a power supply module.

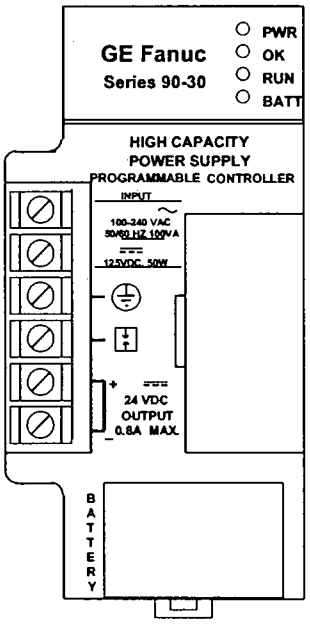

Figure 1-2. Power Supply Module

Then add a **CPU module**. A CPU module can only mount in baseplate slot 1, next to the power supply. Slot 1 has a unique connector that will only fit CPU or special Option modules.

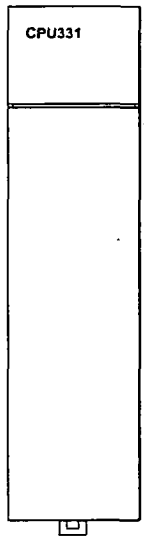

Figure 1-3. CPU Module

To finish, we will add some **I/O modules** to baseplate slots 2 through 5.

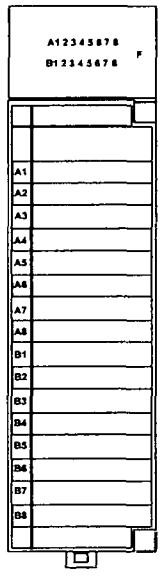

Figure 1-4. I/O Module

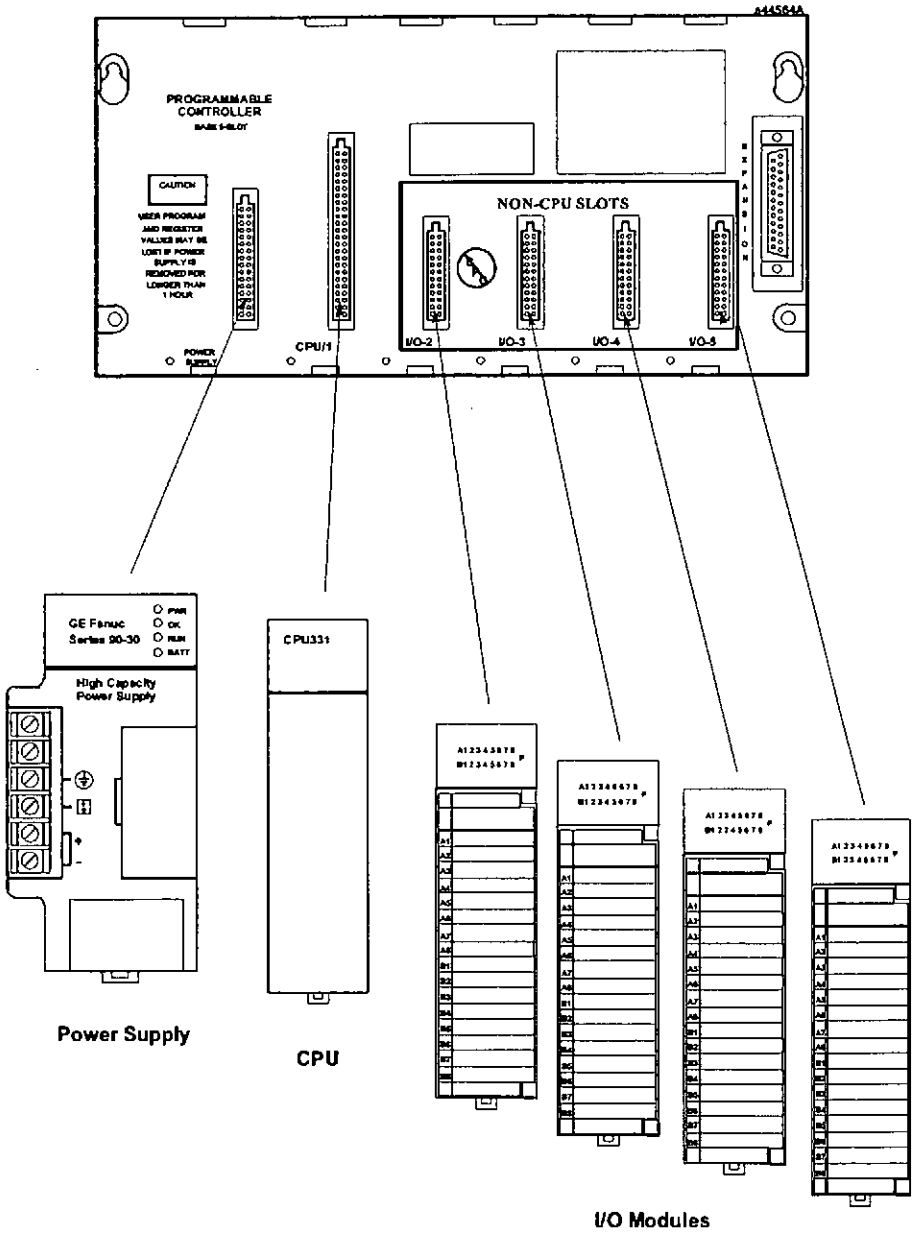

Figure 1-5. Assembling the System

When assembled, the system will look like this:

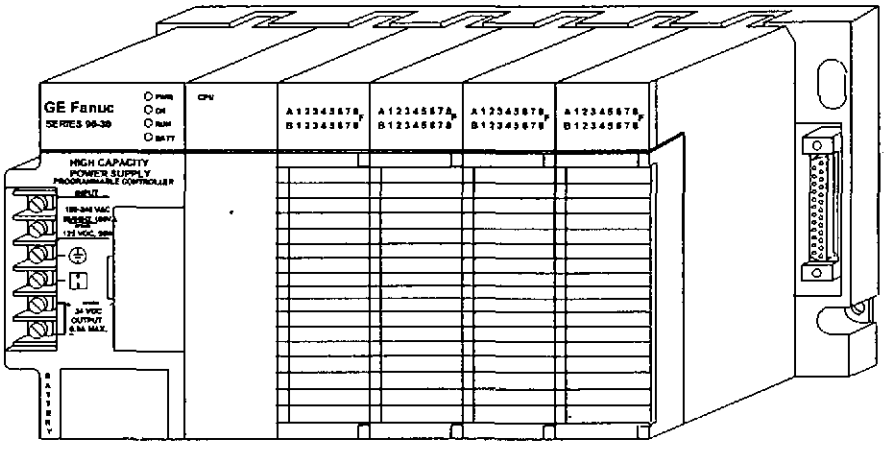

Figure 1-6. A Basic System

An assembly of baseplate and modules such as this one is called a "Rack."

What else would be needed to make this basic system functional?

To make this basic system functional, you would need:

- **Mounting.** Safe, secure mounting for the PLC in a protective enclosure.
- **Wiring.** This includes properly installed incoming power to the power supply, as well as wiring from the I/O modules to field devices such as switches, sensors, solenoids, relays, etc.
- **Program.** An application program for the PLC to run. This is developed with GE Fanuc PLC programming software.

What if the application requires more than five modules?

You could use a 10-slot baseplate, shown in the next picture:

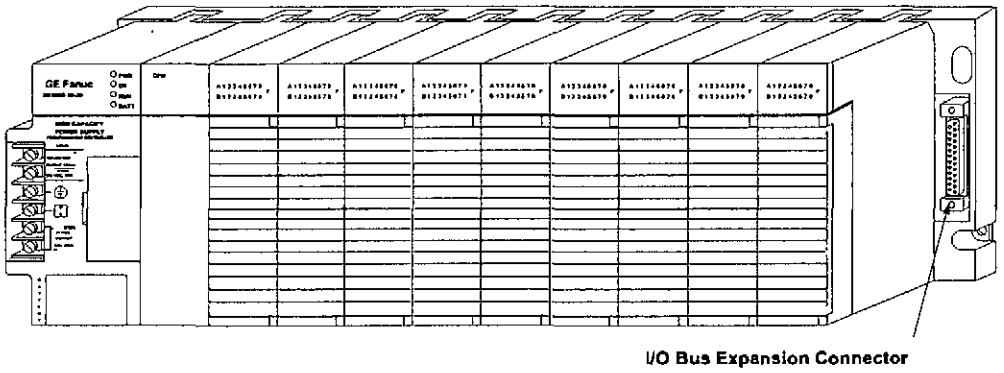

Figure 1-7. Ten-Slot Rack

What if the application requires more than ten modules?

You can add one or more Expansion or Remote racks to this system. Some CPUs can support up to seven additional racks. If you added seven additional 10-slot racks, you could have 70 more modules.

Racks are interconnected in a "daisy-chain" cabling arrangement. This interconnection system is called the "I/O Expansion Bus." The connections are made from one baseplate's I/O Bus Expansion Connector (shown in the figure above) to the next one's. The I/O Bus Expansion Cables, shown below, have a double connector on one end to facilitate these connections.

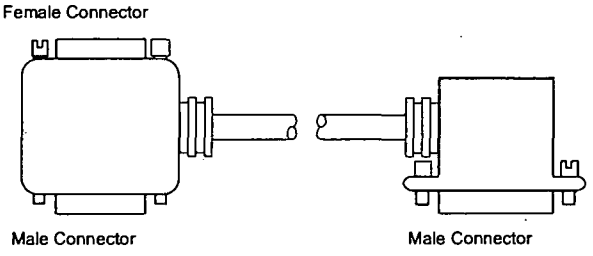

Figure 1-8. I/O Bus Expansion Cable

The next figure shows a system that has a CPU baseplate, one Expansion rack and three Remote racks. Notice that the last rack, the one at the end of the I/O Expansion Bus, must be terminated. A convenient way of terminating the bus is with an IC693ACC307 I/O Bus Terminator Plug, as shown.

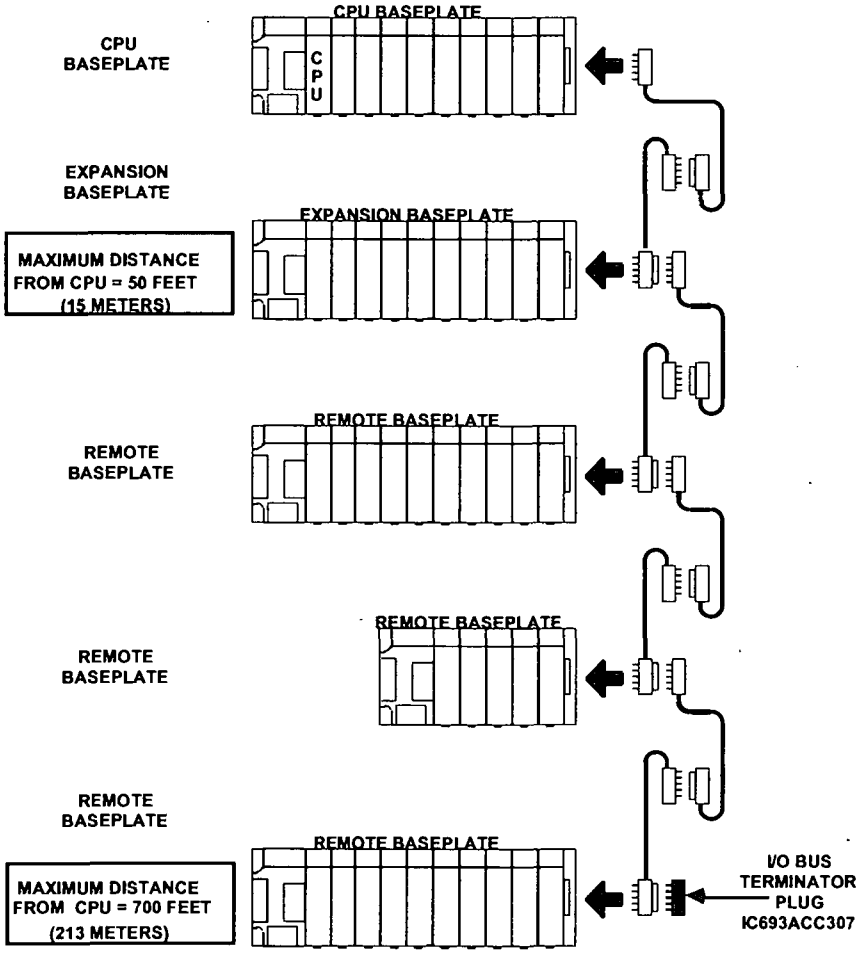

Figure 1-9. Connecting Expansion and Remote Baseplates

What is the Difference Between Expansion and Remote baseplates?

The main factor to consider is distance. How far will the baseplate be from the CPU baseplate? If the cabling distance from the CPU baseplate is 50 feet (15 meters) or less, use an Expansion baseplate. The Expansion baseplate is preferable because of its higher communication speed with the CPU baseplate. However, if a baseplate must be located where it requires a cabling distance from the CPU rack in excess of 50 feet, an Expansion baseplate will not work - a Remote baseplate must be used. The limit for a Remote baseplate is a cabling distance of 700 feet (213 meters) from the CPU baseplate to the farthest Remote baseplate.

What if I need to cover more than 700 feet (213 meters)?

You can cover much greater distances by using Series 90-30 communications option modules. For example, Genius Bus Controller Modules (GBC) can communicate at distances up to 7,500 feet (2,286 meters) over a shielded twisted-pair cable, as shown in Example 1 below. Or, serial communications with Communications Coprocessor Modules (CMM) using the RS-485 standard can cover up to 4,000 feet (1,219 meters), as shown in Example 2 below. And virtually unlimited communication distances can be attained with modems and telephone lines or radio transmitters. Also, there are numerous networking options available such as Ethernet or WorldFIP.

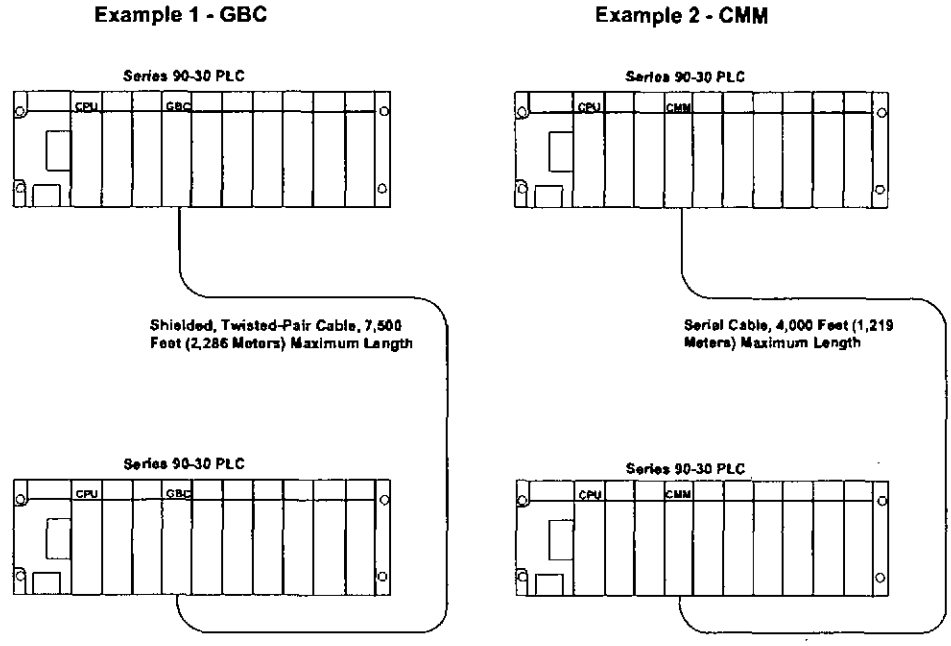

Figure 1-10. Connecting PLCs Using GBC or CMM Modules

Chapter 2 Installation

This chapter discusses installation details only. Other information about the products such as hardware descriptions and specifications, is covered in the applicable chapters.

Important Note

Series 90-30 PLCs must be mounted in a protective enclosure.

The installation instructions described in this chapter apply to PLC installations that do not require special procedures for noisy or hazardous environments. For installations that must conform to more stringent requirements (such as CE Mark), see ***GFK-1179, Installation Requirements for Conformance to Standards.*** *Also see* ***GFK-0867, GE Fanuc Product Agency Approvals, Standards, General Specifications.***

Receiving your Products - Visual Inspection

When you receive your Series 90-30 PLC system, carefully inspect all shipping containers for damage that may have occurred during shipping. If any part of the system is damaged, notify the carrier immediately. The damaged shipping container should be saved as evidence for inspection by the carrier.

As the consignee, it is your responsibility to register a claim with the carrier for damage incurred during shipment. However, GE Fanuc will fully cooperate with you if such action is necessary.

Pre-installation Check

After unpacking Series 90-30 PLC racks, cables, modules, etc., **record all serial numbers**. Serial numbers are printed on the module packaging. Serial numbers are required to make a claim during the warranty period of the equipment. All software product registration cards should be completed and returned to GE Fanuc. See "Module Features" in this chapter for location of module serial numbers. See "Common Baseplate Features" in chapter 3 for location of baseplate serial numbers.

You should verify that all components of the system have been received and that they agree with your order. If the parts received do not agree with your order, call Programmable Control Customer Service at 1-800-432-7521. A Customer Service representative will provide further instructions.

If you require assistance with your installation, GE Fanuc's Technical Support department offers expert help. Call the support number for your area from the list in Chapter 13, "Maintenance and Troubleshooting." The GE Fanuc web site support address is *www.gefanuc.com/support/plc*.

Warranty Claims

Record the serial number of the defective item and contact your distributor for instructions.

2

Working with Series 90-30 Modules

Module Features

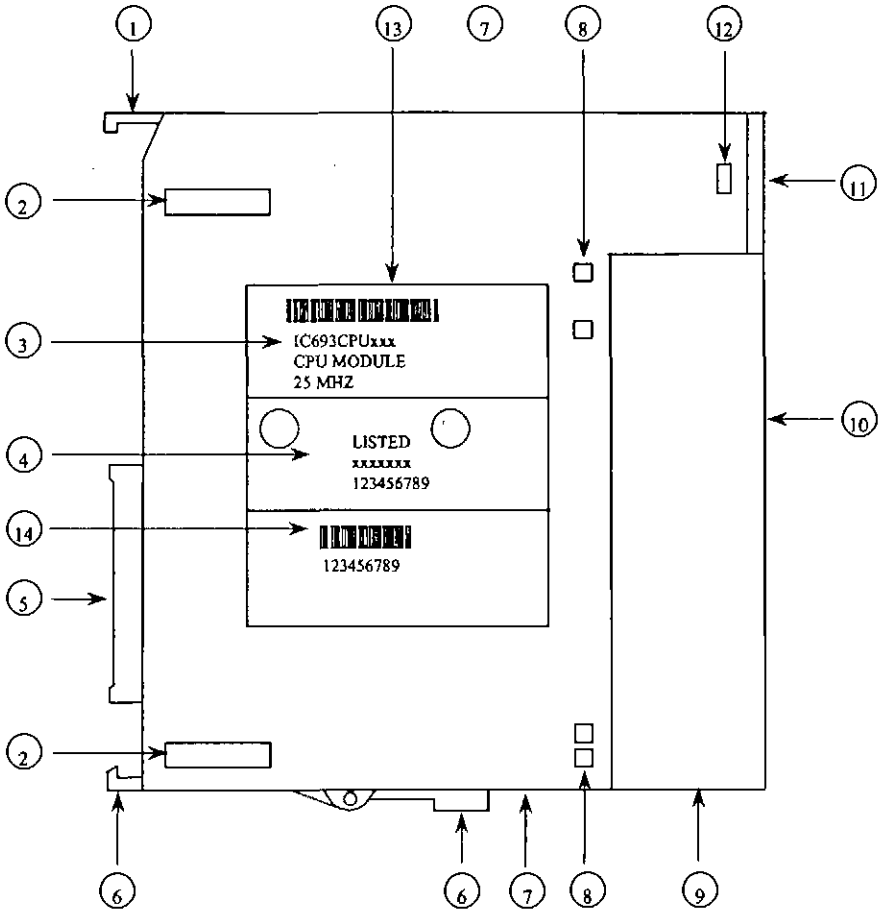

Figure 2-1. Features of Series 90-30 Module

1. Pivot hook
2. Circuit board holding tabs (two on each side of module)
3. Catalog number and description section of label (Includes MAC address for CPU374.)
4. Certification (UL, CE, etc.) section of label
5. Module connector - plugs into baseplate backplane connector
6. Release lever - spring loaded
7. Ventilation openings in module case (top and bottom)
8. Front cover holding tabs (two on each side of module)
9. Front cover (shown) or terminal board (for I/O modules).
10. Front cover faceplate or hinged cover for terminal board.
11. Lens cap (some modules do not have).
12. Lens cap holding tabs (one on each side of module)
13. Module label
14. Serial Number - used to determine module warranty status. (On some modules, the Serial Number may be on a small tag on the back of the module.)

Installing a Module

Warning

Do not insert or remove modules with power applied. This could cause the PLC to stop or malfunction. Injury to personnel and damage to the module or baseplate may result. Also, attempts to force a module into an improper slot type will result in damage to the module and/or the baseplate. Modules will mount in the correct slot type easily, with a minimum of force.

Use the following instructions as a guide when inserting a module into a baseplate slot.

- Check that module catalog number matches slot configuration. Each slot is, or will be, assigned a particular module type during configuration. A Power Supply module must be installed in the left end unnumbered slot only, and a CPU module and some special Option modules can only be installed in Slot 1 of a CPU baseplate. I/O Modules and most Option modules install in slots numbered 2 and higher.
- Grasp the module firmly with terminal board toward you and with rear pivot hook facing away from you.
- Align the module with the desired baseplate slot and connector. Tilt the module upwards so that top rear pivot hook of the module engages the baseplate's top module retainer.
- Swing the module downward until the module's connector engages the baseplate's backplane connector, and the release lever on the bottom of the module snaps into place in the baseplate's bottom module retainer.
- Visually inspect the module to be sure that it properly seated.

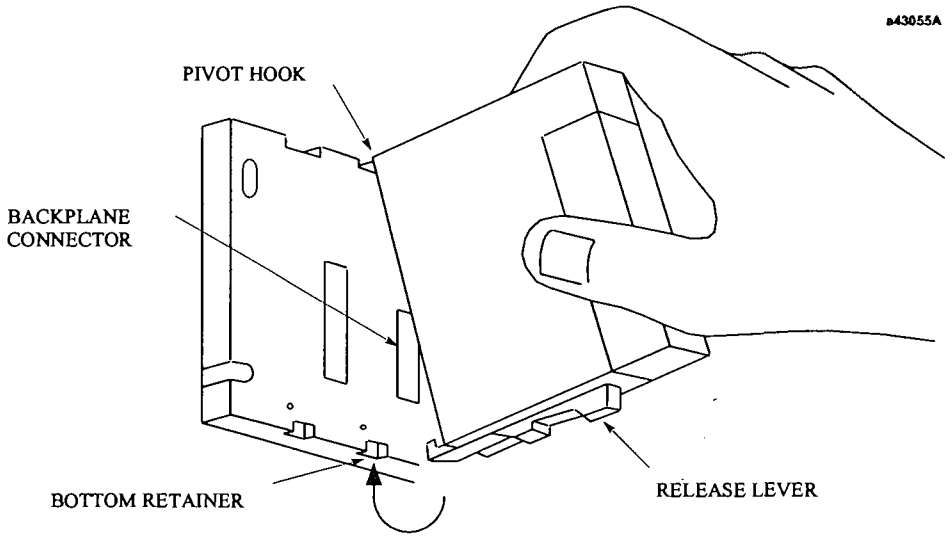

Figure 2-2. Installing a Module

Removing a Module

Warning

Do not insert or remove modules with power applied. This could cause the PLC to stop or malfunction. Injury to personnel and damage to the module or baseplate may result. Also potentially dangerous voltages from user devices may be present on a module's screw terminals even though power to the rack is turned off. Care must be taken any time that you are handling the module's removable terminal board or any wires connected to it.

- If the module has wiring, remove the module's terminal board (NOTE: You do not have to unwire the terminal board) or cables. The procedure for removing a terminal board is described later in this section.
- Locate the release lever at the bottom of the module and firmly press it up, towards the module.
- While holding the module firmly at its top and fully depressing release lever, swing (pivot) the module upward (release lever must be free of its retaining slot).
- Disengage pivot hook at the top rear of the module by moving the module up and away from the baseplate.

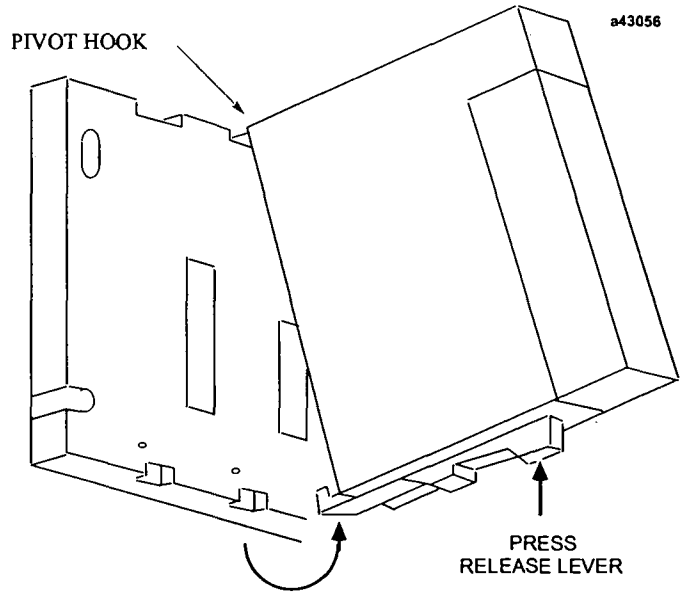

Figure 2-3. Removing a Module

Note

Modules in expansion or remote baseplates can be added, removed, or replaced while the PLC is in RUN mode if power is first removed from the expansion or remote baseplate. I/O data to/from this baseplate will not be updated while power is removed.

Installing a Module's Terminal Board

Note: Modules IC693MDL730F (and later) and IC693MDL731F (and later) have special terminal boards that are equipped with holding screws. For Installation and Removal instructions, please see the section "Installing and Removing Terminal Boards with Holding Screws" later in this chapter.

To install a terminal board (circled numbers refer to drawing below):

- Hook the pivot hook ①, located on the bottom of the terminal board, to the lower slot on the module.
- Push the terminal board toward the module ② until it snaps into place.
- Open the terminal board cover ③ and ensure that the latch on the module is securely holding the terminal board in place.

Caution

Compare the module catalog number on the label on the back of the hinged door (see Figure 2-6) and the label on the side of the module (see below) to ensure that they match. If a wired terminal board is installed on the wrong module type, damage to the module may occur when the system is powered up.

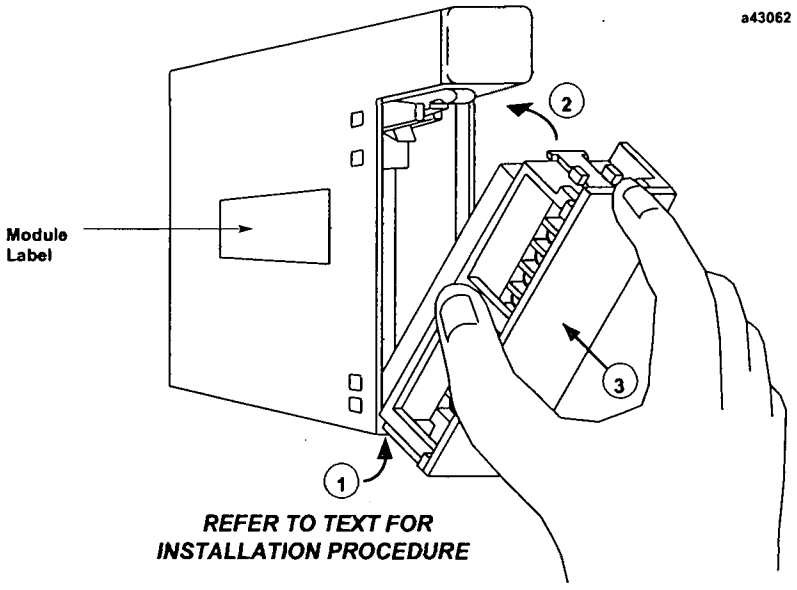

Figure 2-4. Installing an I/O Module's Terminal Board

Removing a Module's Terminal Board

To remove a terminal board:

- Open the plastic terminal board cover.
- Push up on the jacking lever to release the terminal block.

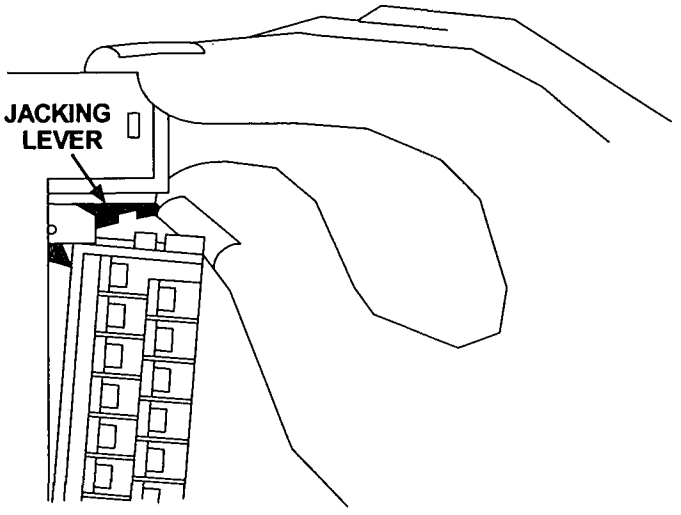

- Grasp pull-tab and pull it towards you until contacts have separated from module housing and bottom pivot hook has disengaged.

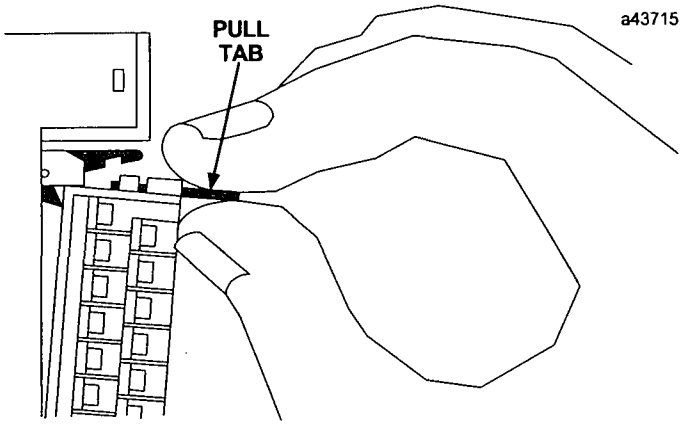

Figure 2-5. Removing a Module's Terminal Board

I/O Module Terminal Board Posts

The terminal board has three posts on the left side. The top and bottom posts hold the terminal board cover in place. The middle post keeps the terminal board wiring in place. If you do not require it to hold the wiring in place, the middle post can be easily snapped off. (Be careful that you do not inadvertently snap it off if you need it to keep your wiring in place.)

Installing and Removing Terminal Boards with Holding Screws

Discrete output modules IC693MDL730F (and later) and IC693MDL731F (and later) have a special terminal board that is equipped with holding screws, shown in the figure below. These screws prevent the terminal board-to-module connections from deteriorating in applications where the PLC is subjected to severe vibration .

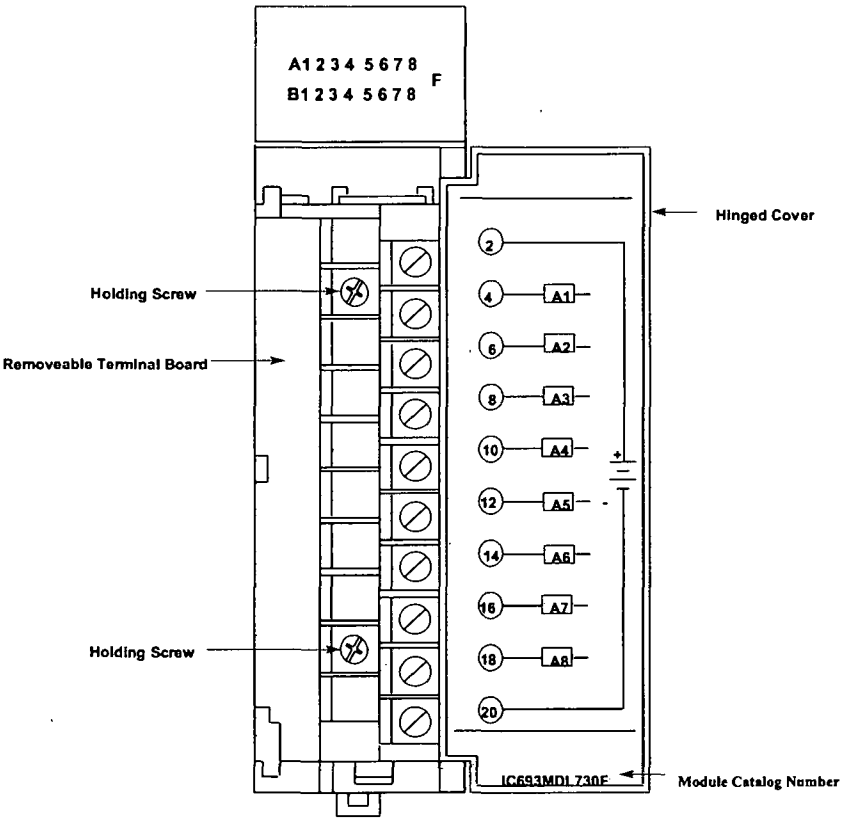

Figure 2-6. Terminal Board with Holding Screws

- **Removing:** To Remove these terminal boards, first loosen the two holding screws on the front of the terminal board, then follow the standard removal instructions in the section "Removing an I/O Module's Terminal Board." The holding screws are held captive in the terminal board and do not have to be completely removed.
- **Installing:** To install these terminal boards, follow the standard installation instructions in the section "Installing an I/O Module's Terminal Board," then tighten the two holding screws to 8 to 10 inch-pounds (1 Newton-meter) of torque.

2

Baseplate Mounting

Warning

Be sure to follow baseplate grounding instructions in this chapter. Failure to properly ground the PLC can result in improper operation, damage to equipment, and injury to personnel.

Mounting a Baseplate to a Panel

- Use four good-quality 8-32 x 1/2 (4 x 12mm) machine screws, lock washers and flat washers. Install the screws in four tapped holes. The "Baseplates" chapter has the applicable dimensions and mounting clearances. Alternately, 10-slot baseplates can be mounted in standard 19-inch racks by using the appropriate adapter. This is also discussed in the "Baseplates" chapter.
- A vertical mounting orientation is preferred for maximum heat dissipation. Other mounting orientations will require derating the Power Supply current capabilities. See Chapter 12, "System Design," for details.
- All baseplates must be grounded. The "Baseplate Safety Grounding" section of this chapter has details.
- The Rack Number Selection switch must be set on each Expansion or Remote baseplate. A CPU baseplate does not require this switch. Rack numbers should be assigned by the system designer. Failure to set the Rack Number Selection switches properly will result in system malfunction. See the "Baseplates" chapter for details on setting these switches.

Mounting a Baseplate to a 19" Rack

Two optional Baseplate Adapter Brackets allow a 10-slot baseplate to be mounted in a 19 inch rack. Each baseplate installation requires only one of the adapter brackets.

- **IC693ACC308 Front Mount Adapter Bracket.** Used to mount a baseplate to the front face of a 19" rack. Install the adapter bracket by inserting the tabs at the top and bottom of the adapter bracket into the corresponding slots at the top and bottom of the plastic baseplate cover. NOTE: Although Figure 2-7 shows the plastic baseplate cover removed, this is for illustration purposes only. It is not necessary to remove the cover to install the bracket. With the bracket in place, insert and tighten the two screws (included with the bracket) through the back of the baseplate holes into the threaded holes in the bracket.

- **IC693ACC313 Recessed Mount Adapter Bracket.** Used to recess mount a baseplate inside a 19" rack. A baseplate mounts on the rear panel of this adapter bracket using four 8-32 (4mm) screws, nuts, lock washers, and flat washers. The Adapter Bracket bolts through its four slotted holes to the face of the 19" rack using applicable hardware (lock washers recommended).

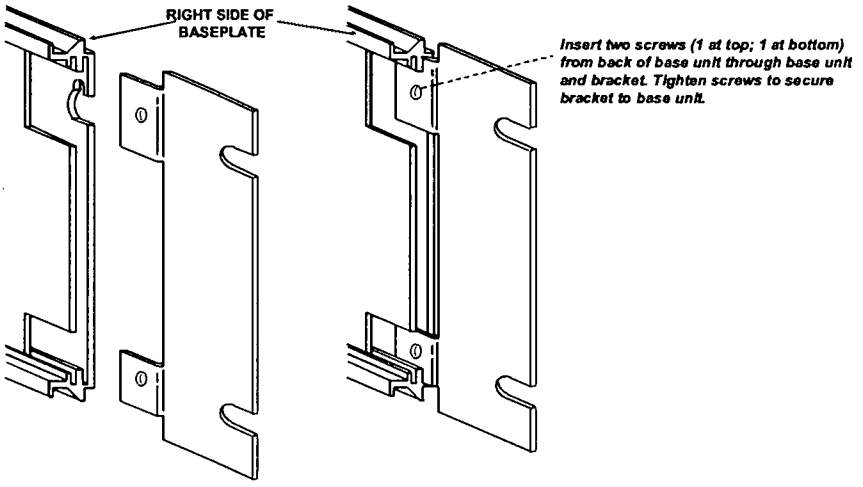

Note: Baseplate is shown with cover removed for illustration purposes. It is not necessary to remove the baseplate cover to install the bracket.

Figure 2-7. IC693ACC308 Front Mount Adapter Bracket Installation

Dimensions for rack mounting a 10-slot baseplate with the IC693ACC308 Front Mount Adapter Bracket are shown in the following figure.

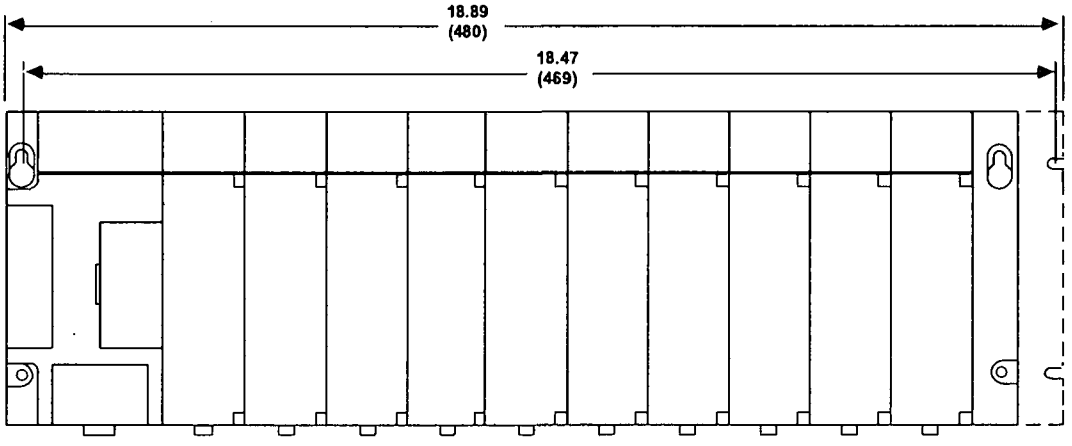

DIMENSIONS IN INCHES (MILLIMETERS IN PARENTHESES)

Figure 2-8. Dimensions for 19-inch Rack Mounting Using IC693ACC308 Adapter Bracket

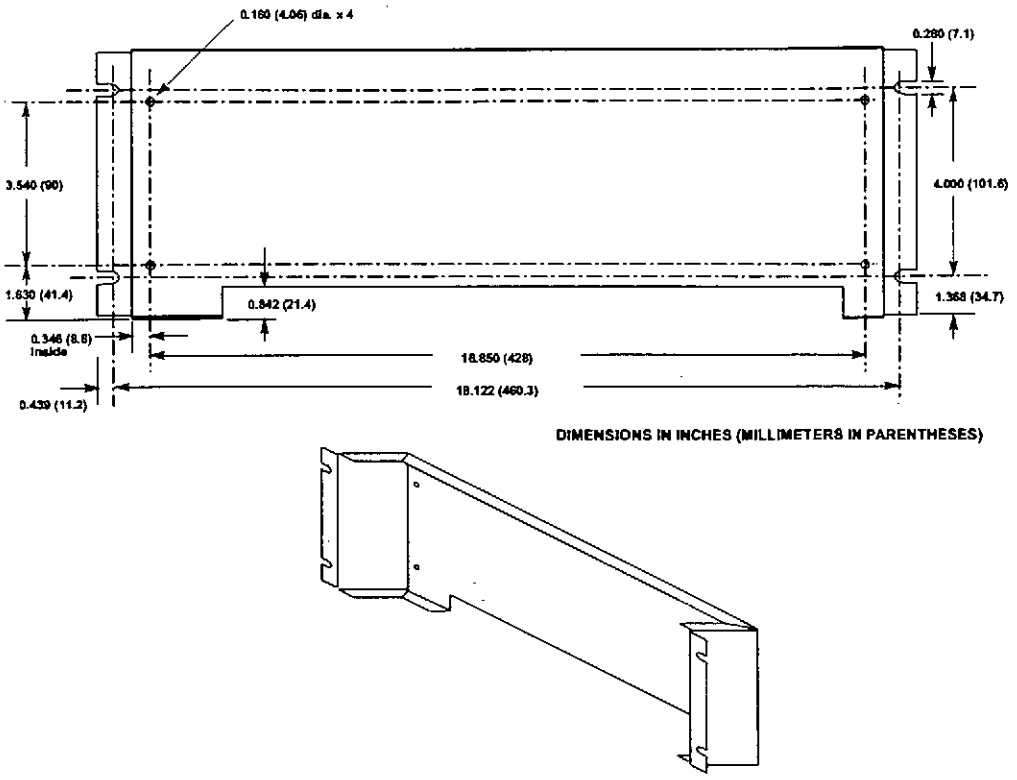

Figure 2-9. IC693ACC313 Recessed Mount Adapter Bracket

Grounding Procedures

System Grounding Procedures

Warning

In addition to the following grounding information, we strongly urge that you follow all applicable codes that apply to your area. For example, in the United States, most areas have adopted the National Electrical Code standard and specify that all wiring conform to its requirements. In other countries, different codes will apply. For maximum safety to personnel and property you must follow these codes. Failure to do so can mean injury or death to personnel, damage to property, or both.

All components of a programmable logic control system and the devices it is controlling must be properly grounded. This is particularly important for the following reasons.

- A low resistance path from all parts of a system to earth minimizes exposure to shock in the event of short circuits or equipment malfunction.
- The Series 90-30 PLC system requires proper grounding for correct operation.

Ground Conductors

- Ground conductors should be connected in a tree fashion with branches routed to a central earth ground point, shown in the figure below. This ensures that no ground conductor carries current from any other branch. This method is shown in the following figure.
- Ground conductors should be as short and as large in size as possible. Braided straps or ground cables (typically green insulation with a yellow tracer - AWG #12 (3.3 mm^2) or larger) can be used to minimize resistance. Conductors must always be large enough to carry the maximum short circuit current of the path being considered.

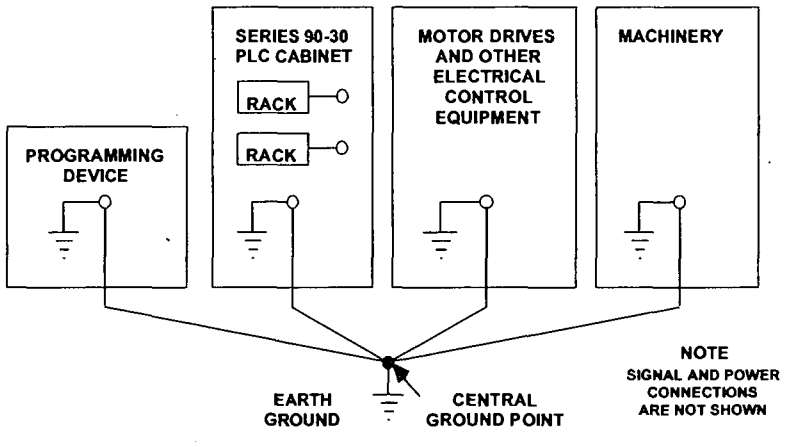

Figure 2-10. Recommended System Grounding

2

Series 90-30 PLC Equipment Grounding

Equipment grounding recommendations and procedures are listed below. These grounding procedures must be properly followed for safe, proper operation of your Series 90-30 PLC system.

Baseplate Safety Grounding

The following recommendations are offered, but applicable safety codes for your area or equipment type should also be consulted. The baseplate's metal back must be grounded using a separate conductor; the baseplate mounting screws are not considered to an acceptable ground connection by themselves. Use a minimum AWG #12 (3.3 mm^2) wire with a ring terminal and star lock washer under the head of one of the baseplate's two lower mounting holes. These two holes have openings to the side to allow connecting a wire and ring terminal under the head of a mounting screw. Connect the other end of this ground wire to a tapped hole in the panel that the baseplate is mounted to, using a machine screw, star lock washer, and flat washer. Alternately, if your panel has a ground stud, it is recommended you use a nut and star lock washer for each wire on the ground stud to ensure adequate grounding. Where connections are made to a painted panel, the paint should be removed so clean, bare metal is exposed at the connection point. Terminals and hardware used should be rated to work with the aluminum baseplate material.

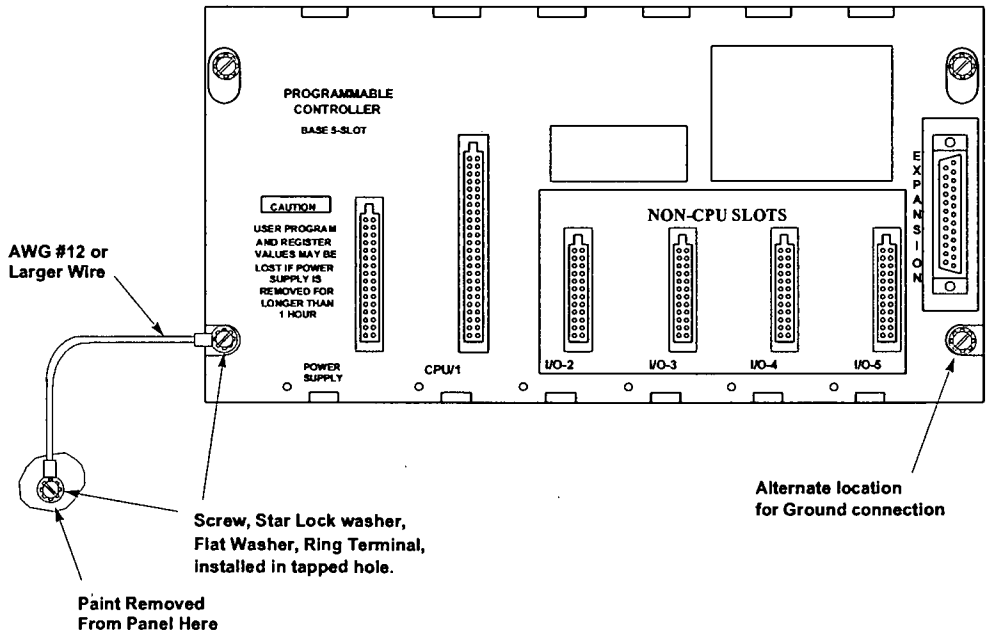

Figure 2-11. Baseplate Grounding

Warning

All baseplates must be grounded to minimize electrical shock hazard. Failure to do so can result in severe personal injury.

All baseplates grouped together in a Series 90-30 PLC system must have a common ground connection. This is especially important for baseplates that are not mounted in the same control cabinet.

Grounding 19" Rack-Mounted Baseplates

There are two Adapter Brackets used for mounting a 10-slot Series 90-30 baseplate to a 19" Rack. Regardless of which of the two Adapter Brackets is used, the 19" Rack should be grounded as per the instructions in "System Grounding Procedures," including Figure 2-10. (For details on the Adapter Brackets, see the "Mounting a Baseplate to a 19" Rack" section earlier in this chapter.)

Nineteen-Inch Rack-mounted PLC baseplates should be grounded according to the guidelines in the "Baseplate Safety Grounding" section, using a separate ground wire from the PLC baseplate as shown in the previous figure (Fig. 2-11).

- If using the **Recessed Mount Adapter Bracket (IC693ACC313)**, the ground wire can be installed as shown in Figure 2-11 with the ground attached to the Recessed Mount Adapter Bracket. An additional ground wire connecting the Adapter Bracket to a solid chassis ground on the 19" Rack should be installed. Use the same or equivalent hardware and paint removal scheme as shown in Figure 2-11.
- If using the **Surface Mount Adapter Bracket (IC693ACC308)**, the ground wire should be run from the baseplate as shown in Figure 2-11, to a solid chassis ground on the 19" Rack. Use the same or equivalent hardware and paint removal scheme as shown in Figure 2-11.

Programmer Grounding

For proper operation, the computer (programmer) running the PLC software must have a ground connection in common with the CPU baseplate. Normally, this common ground connection is provided by ensuring that the programmer's power cord is connected to the same power source (with the same ground reference point) as the baseplate. If it is not possible to ensure this common ground scheme, use a port isolator (IC690ACC903) between the programmer and PLC serial connection. If the programmer ground is at a different potential than the PLC ground, a shock hazard could exist. Also, damage to the ports or converter (if used) could occur when the programmer serial cable is connected between the two.

Warning

Failure to follow programmer grounding recommendations could result in personal injury, equipment damage, or both.

2

Module Shield Grounding

In general, the aluminum PLC baseplate is used for module shield grounding. On some Series 90-30 modules, shield connections to the user terminal connector on the module are routed to the baseplate through the module's backplane connector. Other modules, such as CPUs 351, 352, 363, 364, and 374 require a separate shield ground. These are discussed in the next several sections.

Shield Grounding Information for CPUs with External Port Connections

CPUs with external port connections, the 351, 352, 363, 364, and 374 must have a separate shield ground connection to provide shielding for these ports. Because the design of the ground connection for the CPU351 and 352 is different from that of the CPU363, 364, and 374, each grounding method is discussed in a separate section.

CPU351 and 352 Shield Grounding

The CPU 351 or 352 module must be connected to frame ground at the slot where it is installed. Two methods are provided for making this ground connection. Each CPU comes with an EMC Grounding Kit (44A737591-G01) that contains a ground wire, grounding bracket, and screws.

1. The connection from the CPU to frame ground can be made using the ground wire (part number 44A735970-001R01) that comes with the module in the EMC Grounding Kit. This wire has a stab-on connector on one end for connection to a mating terminal on the bottom of the CPU, and a ring terminal on the other end for connection to a grounded enclosure. Where the ring terminal contacts a painted enclosure panel, either a star lock washer can be installed between the terminal and the panel to cut through the paint, or the paint can be scraped away down to clean, bare metal to ensure a good contact. **Note: The star lock washer method is suitable for a shield ground, but <u>not suitable for a safety ground</u>.**

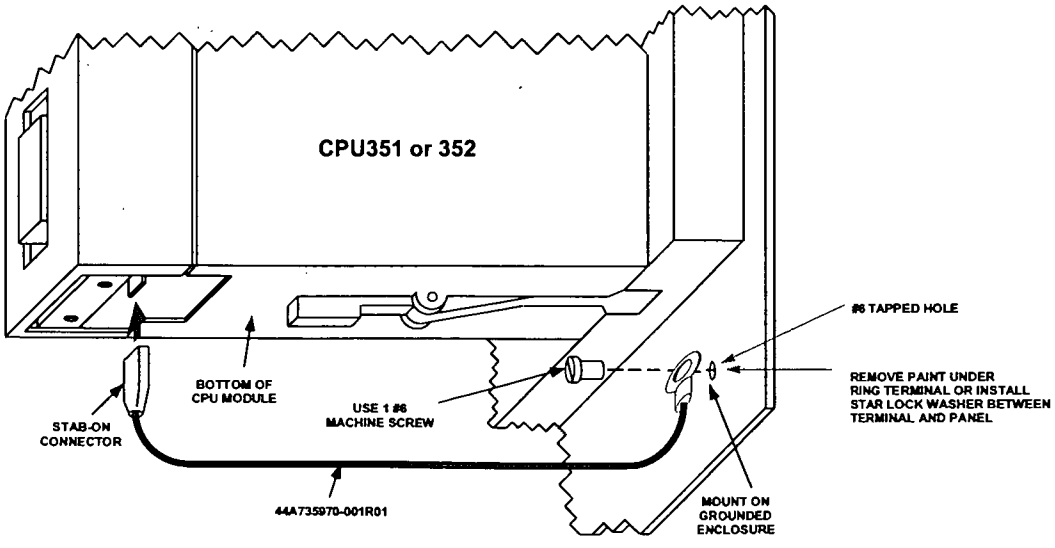

Figure 2-12. CPU 351 or 352 - Attaching Shield Ground Wire

2. The second method, which can be used for systems in noisy environments consists of installing the green ground wire ***and*** the optional grounding bracket (part number 44C715646-001R01). This bracket attaches to the CPU using two #4 thread-rolling screws (part number N666P9004B6) and to the grounded enclosure using two #6 thread-rolling screws (part number N666P13006B6). Two holes must be drilled in the enclosure for mounting this bracket. Also, if the bracket will be attached to a painted surface, the paint should be removed down to bare metal under the bracket to ensure good contact between the bracket and the surface. See the next figure.

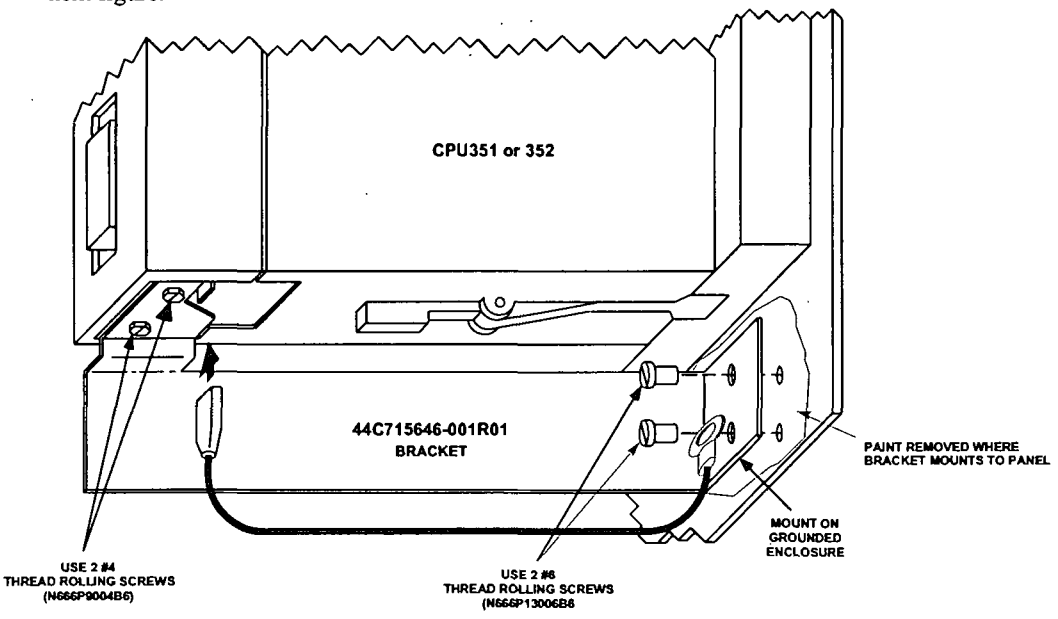

Figure 2-13. CPU 351 or 352 - Mounting the Shield Grounding Bracket and Wire

Note: When the grounding bracket is used, pin 1 of the cable connector that plugs into the Port 2 connector should not be connected. A metal connector shell must be used on the cable for this port, and the cable shield must be terminated at the metal shell instead of pin 1 of the connector.

CPU363, CPU364, and CPU374 Shield Grounding

The CPU363, CPU364, and CPU374 modules must be connected to frame ground at the slot where they are installed. Each module comes with a grounding wire for this purpose. These modules do not support or require the use of a grounding bracket. If the ring terminal on the grounding wire is to be mounted to a painted surface, remove the paint under the ring terminal to ensure good contact, or place a star lock washer between the ring terminal and the painted surface. See the next figure.
Note: The star lock washer method is suitable for a shield ground, but not suitable for a safety ground.

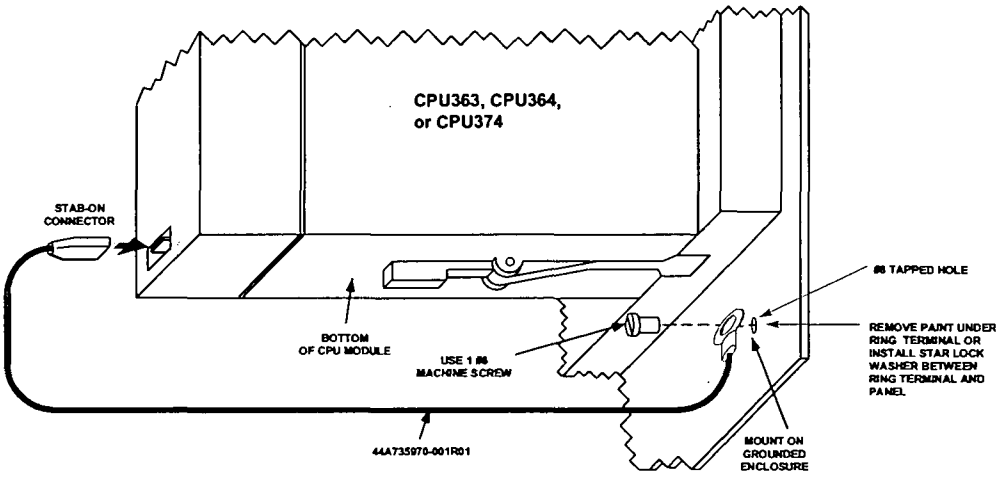

Figure 2-14. CPU 363, CPU364, or CPU374 - Attaching Ground Wire

Additional Modules with Shield Grounding Requirements

Some of the Series 90-30 Option modules, such as the FIP Remote I/O Scanner (IC693BEM330), and DSM modules (IC693DSM302 and IC693DSM314) also have shield grounding requirements. These modules come equipped with suitable grounding hardware. Please refer to each module's user's manual for grounding instructions. Appendix G contains a product to publication cross-reference to help you identify the correct manual.

General Wiring Guidelines

Warning

In addition to the following wiring suggestions, we strongly urge that you follow all wiring and safety codes that apply to your area or your type of equipment. For example, in the United States, most areas have adopted the National Electrical Code standard and specify that all wiring conform to its requirements. In other countries, different codes will apply. For maximum safety to personnel and property you must follow these codes. Failure to do so can lead to personal injury or death, property damage or destruction, or both.

Color Coding Wires

These color codes are commonly used in industrial equipment manufactured in the United States. They are cited here as a reference. Where they are in conflict with codes that apply to your area or your type of equipment, you should follow your applicable codes instead. Besides satisfying code requirements, wire color coding makes testing and troubleshooting safer, faster, and easier.

- Green or green with stripe- Ground
- Black - Primary AC
- Red - Secondary AC
- Blue - DC
- White - Common or neutral
- Yellow - Secondary power source not controlled by the main disconnect. Alerts maintenance personnel that there may be power present (from an external source) even if the equipment is disconnected from its main power source.

Wire Routing

To reduce noise coupling among PLC wires, it is recommended you keep electrically noisy wiring, such as AC power wiring and Discrete Output Module wiring, physically separated from low-level signal wiring such as DC and Analog Input module wiring or communications cables. This can be accomplished by grouping separately, where practical, the following categories of wiring:

- **AC power wiring.** This includes the AC input to the PLC power supply, as well as other AC devices in the control cabinet.
- **Analog Input or Output Module wiring**. This should be shielded to further reduce noise coupling. See the *Series 90-30 I/O Module Specifications Manual*, GFK-0898 for details.
- **Discrete Output Module wiring.** These often switch inductive loads that produce noise spikes when switched off.
- **DC Input Module wiring.** Although suppressed internally, these low-level inputs should be further protected against noise coupling by observing these wiring practices.
- **Communications Cables.** Wiring such as Genius Bus or serial cables should be kept away from noise-producing wiring.

Where AC or Output wiring bundles must pass near noise-sensitive signal wiring bundles, avoid running them beside each other. Route them so that, if they have to cross, they do so at a right angle. This will minimize coupling between them.

Grouping Modules to Keep Wires Segregated

If practical, grouping similar modules together in the PLC racks can help keep wiring segregated. For example, one rack could contain only AC modules, and a different rack only DC modules, with further grouping in each rack by input and output types. For smaller systems, as an example, the left end of a rack could contain Analog modules, the middle could contain DC modules, and the right end could contain AC modules.

Discrete I/O Module Connection Methods

- For modules with 16 points or less, the standard method is to use the removable terminal board which comes with these modules. The removable terminal board makes it easy to prewire field wiring to the user supplied input and output devices, and to replace modules in the field without disturbing existing field wiring.
- Some discrete 16-point I/O modules can be used with an optional Terminal Block Quick Connect (TBQC) assembly. This assembly contains a module faceplate, with built-in connector, that replaces the removable terminal board. The assembly also contains a DIN-rail mounted terminal block and a cable to connect the module to the terminal block. The advantage of this method is that it saves about two hours of wiring time per module compared with hand wiring from a module's removable terminal board to a user-supplied, panel-mounted terminal block or strip.
- Older 32-point I/O modules have one 50-pin connector on the front of the module that is either connected by a cable with a connector on each end to a Weidmuller panel-mounted terminal block (Weidmuller catalog no. 912263), or is connected by a cable with stripped, tinned leads to a user-supplied terminal block or strip.
- Newer 32-point I/O modules have two 24-pin connectors on the front of the module. These module may be wired in one of three ways. (1) Use a pair of cables (IC693CBL327/328 - see data sheet in "Cables" chapter) to connect the module to a user-supplied, panel-mounted terminal block or strip. These cables have a 24-pin connector on one end, and stripped, tinned leads with wire markers on the other end. (2) Use a pair of dual-connector cables to connect the module to a Terminal Block Quick Connect (TBQC) terminal block (IC693ACC377). See Appendix H for details. (3) Make your own custom cables. Instructions are found in the IC693CBL327/328 data sheet in Chapter 10.

Connections to I/O Module Terminal Boards

Series 90-30 PLC I/O terminal boards have either 10 or 20 screw terminals that will accept from two AWG #22 (0.36 mm^2) to two AWG #16 (1.3 mm^2), or one AWG #14 (2.1 mm^2) copper 90°C (194°F) wire(s). Each terminal can accept solid or stranded wires, but the wires into any given terminal should be the same type (both solid or both stranded) to ensure a good connection. Wires are routed to and from the terminals out of the bottom of the terminal board cavity. The suggested torque for the I/O terminal board connection screws is from 9.6 in-lbs to 11.5 in-lbs (1.1–1.3 Newton-meters).

For 24 volt DC input modules, an internal 24 volt power connection is provided on the terminal board to supply a limited number of input devices. Also, a 24 volt DC output is available on the power supply module's terminal board to supply a limited number of output devices.

Terminal Block Quick Connect Installation for 16-Point Discrete Modules

The Terminal Block Quick Connect (TBQC) Assembly is an option for certain Series 90-30 discrete I/O modules. See Appendix H for more information.

- Remove standard terminal board from module.
- Install TBQC faceplate (it has a 24-pin connector).
- Mount the TBQC terminal block. It has a 24-pin connector and a terminal strip, and mounts on a standard 35 mm DIN-rail.
- Connect a TBQC cable between the TBQC faceplate connector on the module and the connector on the TBQC terminal block.
- Wire I/O devices to the terminal block.

Installation of 32-Point Discrete, 50-Pin Connector Modules

These 50-Pin modules are an older design and are not generally used on new systems, unless to fulfill standardization requirements. They are mainly used as replacements for existing installations. For new installations, we recommend the dual 24-pin connector style because they have additional features not found on the older modules (LED indicators, TBQC), and it is much easier to fabricate custom-length cables for them. Installation information is provided here for the convenience of those still using these modules.

Using Weidmuller #912263 Terminal Block

Note: The TBQC is not available for these modules, but you may purchase a Weidmuller #912263 from your electronics distributor for this application.

- Mount the Weidmuller#912263 terminal block. It has a 50-pin connector and a terminal strip, and mounts on a standard 35 mm DIN-rail.
- Connect an IC693CBL306/307 cable between the module's faceplate connector and the connector on the Weidmuller terminal block. See Chapter 10 for cable data.
- Wire I/O devices to the terminal block. See the *Series 90-30 PLC I/O Module Specifications Manual*, GFK-0898, for pin-out information.

Using a Generic Terminal Block or Strip

- Mount terminal block/strip to the enclosure panel.
- Connect an IC693CBL308 or 309 cable, or a custom made cable, to the module's faceplate connector and wire the stripped ends of the cable to the terminal block/strip. See Chapter 10 for cable data.
- Wire I/O devices to the terminal block/strip.

Direct Method

- Connect an IC693CBL308 or 309 cable, or a custom made cable, to the module's faceplate connector and wire the stripped ends of the cable directly to the field devices. See Chapter 10 for cable data. See the Series 90-30 PLC I/O Module Specifications Manual, GFK-0898, for pin-out information.

Installation of Discrete 32-Point, Dual 24-Pin Connector Modules

Using a TBQC

- Mount two TBQC terminal blocks. Each has a 24-pin connector and a terminal strip, and mounts on a standard 35 mm DIN-rail.
- Connect a pair of TBQC cables (IC693CBL329 - 334) between the module's faceplate connector and the connectors on the two TBQC terminal blocks. Note that both a right side and left side cable is required. See Appendix H for a list of cables.
- Wire I/O devices to the terminal blocks. See the Series 90-30 PLC I/O Module Specifications Manual, GFK-0898, for pin-out information.

The Terminal Block Quick Connect (TBQC) Assembly is an option for certain Series 90-30 discrete I/O modules. See Appendix H for more information.

With a Generic Terminal Block/Strip

- Mount terminal block/strip to the enclosure panel.
- Connect an IC693CBL327/328 cables, or a custom made cables, to the module's faceplate connectors, and wire the stripped ends of the cables to the terminal block/strip. Note that both a right side and left side cable is required. See Appendix H for a list of cables. See Chapter 10 for cable data sheets.
- Wire I/O devices to the terminal block/strip. See the Series 90-30 PLC I/O Module Specifications Manual, GFK-0898, for pin-out information.

Direct Method

- Connect an IC693CBL327/328 cable, or a custom made cable, to the module's faceplate connectors, and wire the stripped ends of the cable directly to the field devices. See Chapter 10 for cable data. See the *Series 90-30 PLC I/O Module Specifications Manual*, GFK-0898, for pin-out information.

General Wiring Methods for Analog Modules

Twisted, shielded instrumentation cable is strongly recommended for analog module input or output signal connections. Proper grounding of the shield is also important. For maximum electrical noise suppression, the cable shield should only be grounded at one end of the cable. For Input modules, ground the end that is in the noisiest environment (which often is at the field device end). For Output modules, ground at the module end. See GFK-0898, *Series 90-30 PLC I/O Module Specifications,* for more shield grounding information.

Analog Input Module Wiring Methods

Correcting electrical noise problems can sometimes be a trial-and-error routine. However, in general, it is generally best to ground the cable shield as close to the source of the noise as possible, which is usually at the device end. In troubleshooting noise problems, sometimes it is beneficial to experiment with the shield grounding point location. Remember, the cable shield should be grounded at one end only. Also, it is best to keep the length of stripped cable leads as short as possible to minimize the length of unshielded conductors that will be exposed to the noisy environment. See the *Series 90-30 PLC I/O Module Specifications Manual,* GFK-0898 for additional details.

Using a Generic Terminal Block or Strip

- Mount a terminal strip inside the control enclosure and run a shielded cable from the terminal strip to each input circuit on the module's terminal board terminals.
- Connect each cable's shield to the metal panel next to the terminal strip. Do not connect the shields at the module end (cut shield off at module end of cable and insulate with shrink tubing).
- Wire the field device to the terminal strip with a shielded cable, grounding the shield at the device end only (cut shield off at terminal strip end of cable and insulate with shrink tubing). Also, keep the length of exposed (outside of shield) leads at the terminal strip and device ends as short as possible.

Direct Method

- Run a shielded cable from the field device (transducer, potentiometer, etc.) directly to the module.
- Connect the conductors to the applicable screws on the module's terminal board.

- Ground the shield at the field device end, exposing a minimum amount of conductor to the noisy environment. Do not connect the shield at the module end (cut shield off at module end of cable and insulate with shrink tubing).

TBQC not Recommended for Analog Modules

The Terminal Block Quick Connect (TBQC) Assembly is not recommended for use with analog modules due to cable shielding requirements.

Analog Output Module Wiring

General

Each output should be connected using a good quality shielded wire with the cable shield grounded at the module end. See GFK-0898, *Series 90-30 PLC I/O Module Specifications,* for more information.

Using a Generic Terminal Block or Strip

- Mount a terminal strip inside the control enclosure and run a shielded cable from the terminal strip to each output circuit on the module's terminal board terminals.
- Ground each cable's shield at the module end only. Do not connect the shields at the terminal strip end (cut shields off at terminal strip end of cables and insulate with shrink tubing).
- Wire the field device to the terminal strip with shielded cables, grounding the shields at the terminal strip end only (cut shields off at field device end of cables and insulate with shrink tubing). Also, keep the length of exposed (outside of shield) leads at the terminal strip and device ends as short as possible.

Direct Method

- Run a shielded cable from each field device (transducer, potentiometer, etc.) directly to the module.
- Connect the conductors to the applicable screws on the module's terminal board.
- Ground the shield at the module end only, exposing a minimum amount of conductor to the noisy environment. Do not connect the shield at the device end (cut shield off at device end of cable and insulate with shrink tubing).

TBQC not Recommended for Analog Modules

The Terminal Block Quick Connect (TBQC) Assembly is not recommended for use with analog modules due to cable shielding requirements.

AC Power Source Connections

AC Input Wiring to AC/DC Power Supplies

Warning

If the same AC power source is used to provide AC power to other baseplates in a Series 90-30 PLC System, ensure that all AC input connections are identical at each rack. Do not cross Line 1 (L1) and Line 2 (L2). A resulting difference in potential can injure personnel or cause damage to equipment. Each baseplate must be connected to a common ground.

Ensure that the protective cover is installed over all terminal boards. During normal operation with an AC power source either 120 VAC or 240 VAC is present on the AC Power Supply. The cover protects against accidental shock hazard which could cause severe or fatal injury to the operator or maintenance personnel.

Both the Standard (IC693PWR321) and High Capacity (IC693PWR330) AC/DC power supplies currently have six terminals for user connections. Early versions of some Series 90-30 power supplies had five terminals (see next figure). The wiring methods for both five-terminal and six-terminal types is similar, except that step 3 below does not apply to the five-terminal type.

The power supply terminal boards will accept one AWG #14 (2.1 mm^2) or two AWG #16 (1.3 mm^2) copper 75_ C (167_ F) wires. Each terminal can accept solid or stranded wires, but the wires in any given terminal should be the same type. The suggested torque for the power supply terminal board is 12 in-lbs (1.36 Newton-meters). Open the door protecting the terminal board and make the following connections from the AC power source, and ground connections (system grounding requirements are described in detail later in this chapter).

1. These are wide range supplies that can operate from an AC power source within the nominal range of 100 VAC to 240 VAC at 50/60 Hz. This may vary -15% to +10% for a total maximum range of 85 VAC to 264 VAC. These are auto-ranging supplies that do not require jumper or switch settings for selection of power source voltage.
2. Connect the hot and neutral wires or lines L1 and L2 to the upper two terminals on the terminal board. Connect the safety ground wire to the ground terminal, which is the third terminal from the top, and is marked with a ground symbol.
3. For power supplies with six terminals, the factory jumper between the 3rd and 4th terminals (see figure below), should be left in place for normal installations. However, this jumper must be removed and external surge suppressors installed in installations with a "Floating Neutral" input. Please see the section "Special Instructions for Floating Neutral (IT) Systems" later in this chapter for details.
4. After all connections to Power Supply terminal board have been completed, the protective cover plate should be carefully reinstalled.

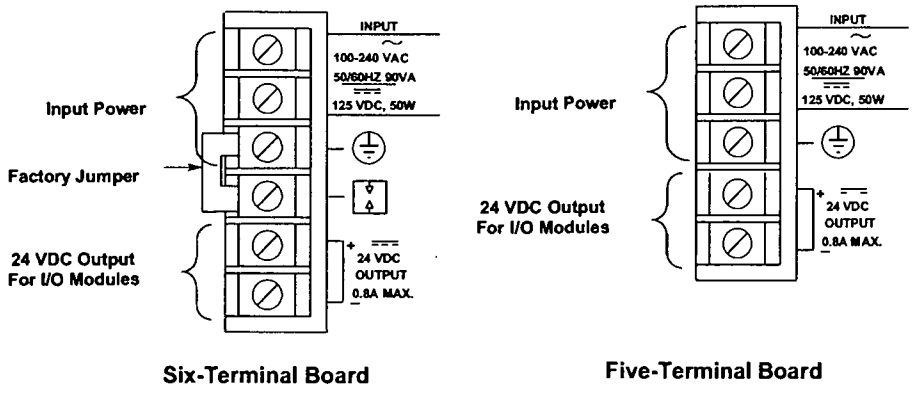

Figure 2-15. Power Supply Terminal Boards

Power Supply Overvoltage Protection Devices

The overvoltage protection devices for this power supply are connected internally to pin 4 on the user terminal board. This pin is normally connected to frame ground (pin 3) with the supplied jumper strap which is installed at the factory. If overvoltage protection is not required *or* is supplied upstream, this feature can be disabled by leaving pin 4 unconnected by removing the jumper strap. Also, this jumper must be removed and external surge suppressors installed in installations with a "Floating Neutral" input, please see the following section "Special Instructions for Floating Neutral (IT) Systems" later in this chapter.

If you want to Hi-pot test this supply, overvoltage protection *must be disabled* during the test by removing the terminal board strap. Re-enable overvoltage protection after testing by reinstalling the strap.

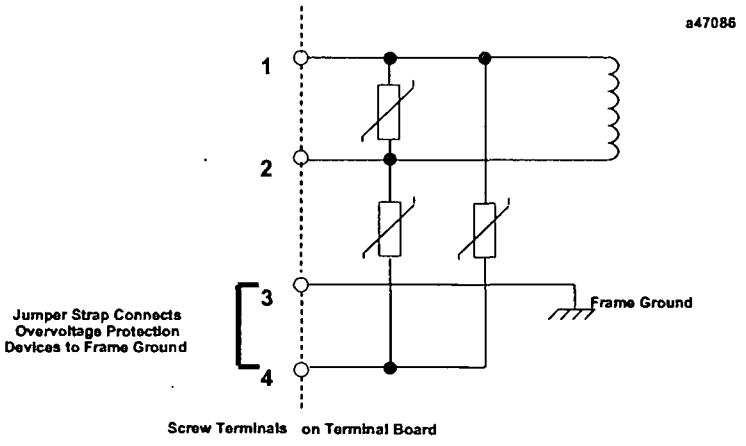

Figure 2-16. Overvoltage Protection Devices and Jumper Strap

Special Installation Instructions for Floating Neutral (IT) Systems

When the AC input power supplies listed below are installed in a system where the Neutral line is **not** referenced to Protective Earth Ground, these special installation instructions must be followed to prevent damage to the power supply.

IC693PWR321S (or later version)
IC693PWR330A (or later version)

Definition of Floating Neutral Systems

A *Floating Neutral System* is a system of power distribution wiring where Neutral and Protective Earth Ground are **not** tied together by a negligible impedance. In Europe this is referred to as an **IT** system (see IEC950). In a *Floating Neutral System*, voltages measured from input terminals to protective earth ground may exceed the 264 Volts AC maximum input voltage specified in the power supply specifications in Chapter 24in this manual.

Example of Floating Neutral System

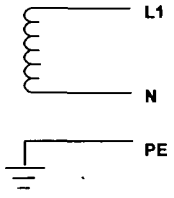

This system **must** be installed using the special installation instructions on the following page.

Systems in which one leg of the power distribution wiring is tied to Protective Earth or a tap between two legs of the power distribution wiring is tied to Protective Earth are **not** *Floating Neutral Systems*.

Examples of Non-Floating Neutral System

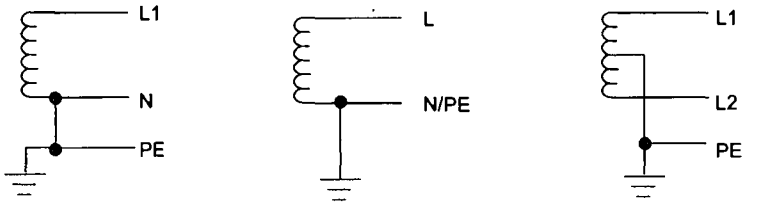

These non-floating neutral systems **do not** require these special installation instructions.

Use These Special Installation Instructions for Floating Neutral Systems

1. The input power terminals should be wired according to the instructions in the "AC Power Source Connections" section of this chapter.
2. The factory installed jumper between terminals 3 and 4 of the Power Supply module **must** be removed if using one of the Power Supplies that have this feature. See the "Overvoltage Protection Devices" section of the "Power Supplies" chapter for details.
3. Voltage surge protection devices, such as MOVs, **MUST** be installed between the following terminals:
   - From L1 to earth ground
   - From L2 (Neutral) to earth ground

The voltage surge devices must be rated such that the system is protected from power line transients that exceed *Line voltage + 100V +(N-PE)*$_{MAX.}$

The expression *N-PE* refers to the voltage potential between neutral and Protective Earth (PE) ground.

For example, in a 240 Volt AC system with neutral floating 50V above earth ground, the transient protection should be rated at:

240V + 100V +50V = 390V

DC Power Source Connections

DC Input Wiring to AC/DC and DC-Only Power Supplies

DC Input power can range from 12 to 30 VDC for the 24 VDC supply, 18 to 56 VDC for the 24/48 VDC supply or 100 to 150 VDC for the 125 VDC supply. All Series 90-30 power supplies have DC input capabilities. The following connection information applies to all of them:

Connect the + and - wires from the power source to the top terminals on the terminal board (+ to the top terminal, - to the second terminal). Connect the third terminal from the top to system ground.

+24 VDC Output (All Supplies)

The bottom two terminals are connected to the isolated 24 volt DC output that can be used to supply power to input circuits (within power limitations of the supply).

Warning

If the same DC input power source is used to provide power to two or more power supplies in a Series 90-30 PLC System, ensure that connection polarity is identical at each rack (top terminal + and second terminal -). Do not cross the Positive (+) and Negative (-) lines. A resulting difference in potential can injure personnel or cause damage to equipment. Also, each baseplate must be connected to a common system ground, described earlier in this chapter.

2

Basic Installation Procedure

Note: Series 90-30 PLCs must be mounted in a protective enclosure. The enclosure should be capable of properly dissipating the heat produced by all of the devices mounted inside it. For details on calculating heat dissipation, refer to Appendix F.

The system design, which includes producing the layout and wiring drawings, should be completed before beginning the installation procedure. This section offers a basic step-by-step approach to installing a Series 90-30 PLC system. Some steps refer to earlier sections of this chapter for additional details. An attempt was made to place the steps in an order that will make the process as efficient as possible. However, due to the wide variance in system designs, this order may not be the most efficient for your system, so you may wish modify this procedure to fit your needs.

1. Gather the schematics, layouts, prints, and other information for the job.

Warning

To avoid the possibility of electrical shock to personnel or damage to your PLC, we recommend that you shut off all power to the system before mounting and wiring the PLC. Also, keep all electronic components away from the area while drilling and tapping to keep metal chips and filings out of these sensitive components.

2. From the layout drawing, determine where the baseplate(s) will be mounted. Lay out the hole locations, either using the dimensions given on your layout drawing or from the "Baseplates" chapter of this manual.
3. Mark the hole locations for the baseplate safety ground wire (see "Baseplate Safety Ground" in this chapter).
4. Mark the hole locations for module shield ground connections (if any). See "Module Shield Ground" (and accompanying sections) in this chapter for instructions.
5. Finish laying (marking hole locations) out the rest of the system. This includes any terminal blocks you will be using. DIN-rail mounted terminal blocks for some of the 32-point I/O modules are manufactured by Weidmuller. DIN-rail mounted GE Fanuc Terminal Block Quick Connect (TBQC) assemblies are optional for some of the 16-point and 32-point discrete I/O modules. If using these TBQCs, refer to Appendix H for data. Also, APM and DSM modules use DIN-rail mounted terminal blocks.

Note

We recommend drilling and tapping all holes before mounting any components. This will avoid getting chips and filings in the components.

6. Drill and tap the marked holes. For baseplate mounting, use 8-32 or 4mm size.
7. Mount the baseplates. Use good quality 8-32 x 1/2 inch or 4 x 12mm size screws. We recommend using star lock washers and flat washers under the screw heads (star lock washer should be located between screw head and flat washer) to ensure a tight baseplate ground connection, and to keep the screws from loosening. Connect each baseplate ground wire as shown in the "Baseplate Safety Ground" section of this chapter.
8. If you have Expansion or Remote racks, determine the correct rack number for each one, then set the rack numbers using the Rack Number Selection dual in-line package (DIP) switch on

the baseplate. Please refer to the "Baseplates" chapter for details on setting these DIP switches. Rack numbers should be assigned by the system programmer because they correspond to system configuration settings and program memory addressing.

9. If you have more than one baseplate (rack), connect the I/O Bus Expansion Cables between the I/O Bus Expansion Connectors, which are located on the right end of the baseplates. The cables are connected in a "daisy-chain" arrangement from one baseplate to the other. This is made possible by the fact that the cables have a dual connector on one end. Therefore, when the cable is plugged into a baseplate connector, the second connector on that end of the cable provides a socket for connecting to the next cable. The data sheet for the I/O Bus Expansion cables (IC693CBL300 etc.) in the "Cables" chapter has sample wiring figures.
10. On the last I/O Bus Expansion Connector, plug in an I/O Bus Expansion Terminator, Catalog Number IC693ACC307 (unless using a cable with built-in terminator resistors, which would either be GE Fanuc cable IC693CBL302, or your own custom-built cable).
11. Install the modules in their correct slots using your system layout drawings. (The label on the side of each module identifies the module type and catalog number.) Refer to the section "Installing Modules" if you are not familiar with how to do this.
12. Connect cables to Option modules. Route cables away from noise-producing wires. See the "Wire Routing" section of this chapter.
13. Be sure to follow the information in the "Wiring Guidelines" section of this chapter to protect the system from electrical noise. Install the power wires to the Power Supply and I/O modules:
    - **I/O modules with removable terminal boards.** You can wire the terminal boards in-place on the modules or remove them from the modules before wiring. Although removing them may help make wiring easier (a previous section "Working with Removable Terminal Boards" shows how to remove a terminal board), care should be taken to avoid mixing them (each terminal board has the catalog number of the module printed on it, and the hinged cover has a wiring diagram for that module type). If you are using wire duct, routing each module's wires through the opening in the duct directly under the module will help to keep each terminal board in its correct position.
    - **I/O Modules with terminal blocks.** Some modules use terminal blocks that mount to the enclosure panel. This includes all 32-point modules and, can include other I/O modules if they are fitted with the optional Terminal Block Quick Connect Assembly. Connect the terminal blocks to the connectors on the modules with the provided cables.
14. Connect the signal (switches, sensors, solenoids, etc.) wires to the terminal boards, or terminal blocks/strips. If wiring to terminal boards, these can be removed for ease of wiring, if desired. See the section "Removing a Module's Terminal Board."
15. When finished wiring the I/O terminal boards (if used and if you removed them for ease of wiring), re-install them on the modules, being careful to match each one with the correct module.

GE Fanuc Automation

P.O. Box 8106
Charlottesville, VA 22906

GFZ-0085

GE Fanuc Automation

Programmable Control Products

Series 90™-30 Programmable Controller

Troubleshooting Guide

GE Fanuc Automation

Programmable Control Products

Series 90™-30 Programmable Controller

Troubleshooting Guide

GFZ-0085 *August 1993*

Notice

This document is based on information available at the time of its publication. While efforts have been made to be accurate, the information contained in this document does not purport to cover all details or variations in hardware and software, nor to provide for every contingency in connection with installation, operation and maintenance. This document may describe features not present in all hardware and software systems. GE Fanuc Automation assumes no obligation of notice to holders of this document with respect to changes subsequently made.

GE Fanuc Automation makes no representation or warranty, expressed, implied, or statutory with respect to, and assumes no responsibility for the accuracy, completeness or usefulness of the information contained in this document. No warranties of merchantability of fitness for purpose shall apply.

The following are trademarks of GE Fanuc Automation North America, Inc.

Alarm Master	CIMSTAR	Helpmate
PROMACRO	Series Six	CIMPLICITY
GEnet	Logicmaster	Series One
Series 90	CIMPLICITY 90–ADS	Genius
Modelmaster	Series Three	VuMaster
ProLoop	CIMPLICITY PowerTRAC	Series Five
Workmaster	Genius Power TRAC	

© Copyright 1993 GE Fanuc Automation North America, Inc.

All Rights Reserved.

Safety Cons' 'erations

General Warnings When Troubleshooting

Stand clear of controlled equipment when power is applied. If the problem is intermittent, sudden unexpected machine motion could occur, causing injury. Also reference NFPA 70E Part II for additional guidelines for safety practices.

Never reach into a machine to operate a switch since unexpected motion could occur, causing injury.

Remove all electrical power at the Main Power Disconnect to ensure total power removal.

Always remove power before inserting or removing modules, or before connecting I/O cabling.

Preface

This guide describes a logical sequence for troubleshooting your Series 90–30 programmable controller. It includes the procedure for changing or adding a EPROM or EEPROM to your CPU. The Series 90–30 PLC is a member of the Series 90™ family of programmable logic controllers from GE Fanuc Automation.

Revisions to this Troubleshooting Guide

This is the first release of this Troubleshooting Guide. Included are models CPU 311, 313, 321, 323, 331 and 341.

Related Publications

Series 90™–30 Programmable Controller Installation Manual (GFK–0356).

Series 90™–30 and 90–20 PLC Hand–Held Programmer User's Manual (GFK–0402)

Logicmaster™ 90 Series 90–30 and 90–20 Programming Software User's Manual (GFK–0466)

Series 90™–30/90–20 Programmable Controllers Reference Manual (GFK–0467)

We Welcome Your Comments and Suggestions

At GE Fanuc Automation, we strive to produce quality technical documentation. After you have used this troubleshooting guide, please take a few moments to write us with your comments and suggestions. Our address is: Manager Technical Publications, GE Fanuc Automation. PO Box 8106, Charlottesville, VA 22906

Drake C. Fink

Sr. Staff Systems Engineer

BEGIN AT THIS SYMBOL ON THE FIRST CHART.

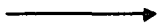

FOLLOW THE PATH WITH THE CORRECT ANSWER IN THE DIRECTION OF THE ARROW

SYMBOLS USED THROUGHOUT THE GUIDE ARE GEOMETRICALLY CODED

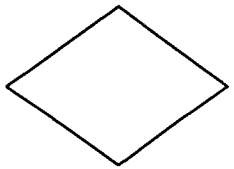

A DIAMOND ASKS A QUESTION

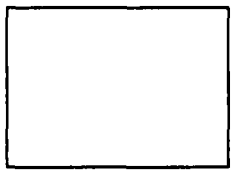

A RECTANGLE TELLS YOU TO DO SOMETHING

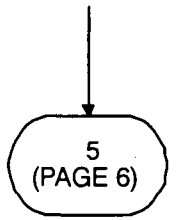

A NUMBERED BUBBLE WITH AN ARROW INTO THE BUBBLE INDICATES THAT THE PROCEDURE IS CONTINUED AT A CORRESPONDINGLY NUMBERED BUBBLE ON THE INDICATED PAGE NUMBER.

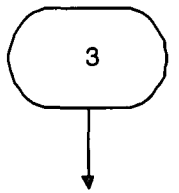

A NUMBERED BUBBLE WITH AN ARROW OUT OF THE BUBBLE INDICATES THE START OF A PROCEDURE ON THAT PAGE.I

Adding or Changing the EEPROM in the 90™-30

Application programs are normally developed in the CPU's RAM memory and executed from RAM memory. If additional program integrity is desired, or operation of the PLC without a battery is desired, an optional EEPROM or EPROM can be installed in a spare socket (labeled PROGRAM PROM) on the Model 311/313 backplane or in a socket on the model 331/341 CPU module. EEPROMs can be written to and read from. EPROMs can be read when installed in the PLC; however, they must be written to using an external PROM programming device.

Following is the procedure for adding or changing the EEPROM or EPROM. For clarity, the term PROM is used to refer to either an EEPROM or an EPROM.

1. Remove power from the system.
2. If 311/313
   - Remove all modules, including the power supply.
   - Remove the plastic cover.
3. If 331/341:
   - Remove CPU from backplane.
   - Remove front plate and bezel. Unsnap circuit board and remove from case.
4. If the socket is the type which has a screw near the top edge (some versions of 311/331), loosen screw at top of PROM socket (CCW twist;).
5. If present, remove old PROM from socket. Replace with or install new PROM. Orient the PROM so the end with a notch (the top of the prom) is toward the top edge of the backplane. Pin 1 of the prom is the first pin on the left as you move counter–clockwise from the notch. On the 311/331, correct installation orients the notch toward the screw.
6. When present, tighten screw at top of PROM socket (CW twist).
7. If 311/313:
   - Replace the plastic cover.
   - Replace all modules, including the power supply.
8. If 331 CPU:
   - Assure jumper JP1, located at the bottom of the PROM socket, is in the 1–2 position for EPROM and the 3–2 position for EEPROM. This informs the CPU firmware which type of device is present.
9. If 331/341 CPU:
   - Replace circuit board in case.
   - Reinstall front plate and bezel.
   - Replace CPU in backplane.

Changing the EEPROM (continued)

10. Apply power. The PLC follows the flowchart found in the "Power–Up Sequence" figure in the Power–Up and Power–Down Section of the *Series 90–30/90–20 Programmable Controllers Reference Manual* (GFK–0467) to determine if a program will be loaded from PROM to RAM.

11. For the EEPROM to be used by the CPU, the CPU configuration must be set to use EEPROM as the "Program Source". You may use the LM90 Configuration software or the HHP to accomplish this.

12. To store the program in RAM, you may use either the Hand–Held Programmer or Logicmaster 90–30, Rev 3.5 or higher. Refer to the instructions in the *HHP User's Manual* (GFK–0402) for HHP. To use Logicmaster 90–30, follow these instructions:

- Start the LM90–30 Programmer Package
- Activate the Utilities Menu (F9)
- Select the EEPROM function (F10)
- Select the WRITE operation
- Verify the items you want to write to EEPROM are selected.
- Press ENTER to start the operation. Refer to the *Logicmaster 90 Series 90–30 and 90–20 Programming Software User's Manual* (GFK–0466) for more information.

Notes and Precautions

1. **WARNING**: Do not discard the lithium–manganese dioxide battery in fire. Do not attempt to discharge the battery. The battery may burst or burn or release hazardous materials. Dispose of the battery as you would any hazardous material.

2. **CAUTION**: After a power fault, the system will come back on in the mode (*STOP, RUN/ENABLED, RUN/DISABLED)* in which it was operating before power loss, unless the power up configuration specifies a particular mode.

3. Not having a battery installed will not prevent the PLC from running. It will generate a PLC fault on power cycle that prevents the PLC from entering *RUN* mode automatically. Clearing this fault will enable the PLC to be placed in *RUN* mode.

4. To short the 'super cap' on a 311/321 PLC:

   - Remove power from the system.
   - Remove all modules, including the power supply.
   - Remove the plastic face plate.
   - Find component C20 along the left edge of the module. This is the 'super cap'. Short the positive (+) and negative (–) leads of this device.
   - Replace the plastic face plate.
   - Replace all modules.
   - Restore power to the system.

5. Supply (input) voltage tolerances for Series 90–30 power supplies:

   IC693PWR321: 100 to 240 VAC
   100 to 250 VDC (125 VDC nominal)

   IC693PWR322: 18 to 56 VDC, 21 VDC
   minimum to start
   24 VDC OR 48 VDC nominal

6. Total cable length must not exceed 50 feet between a CPU rack and an expansion rack. Length must not exceed 700 feet between a CPU rack and a remote rack. No termination plug is needed on a one–rack system.

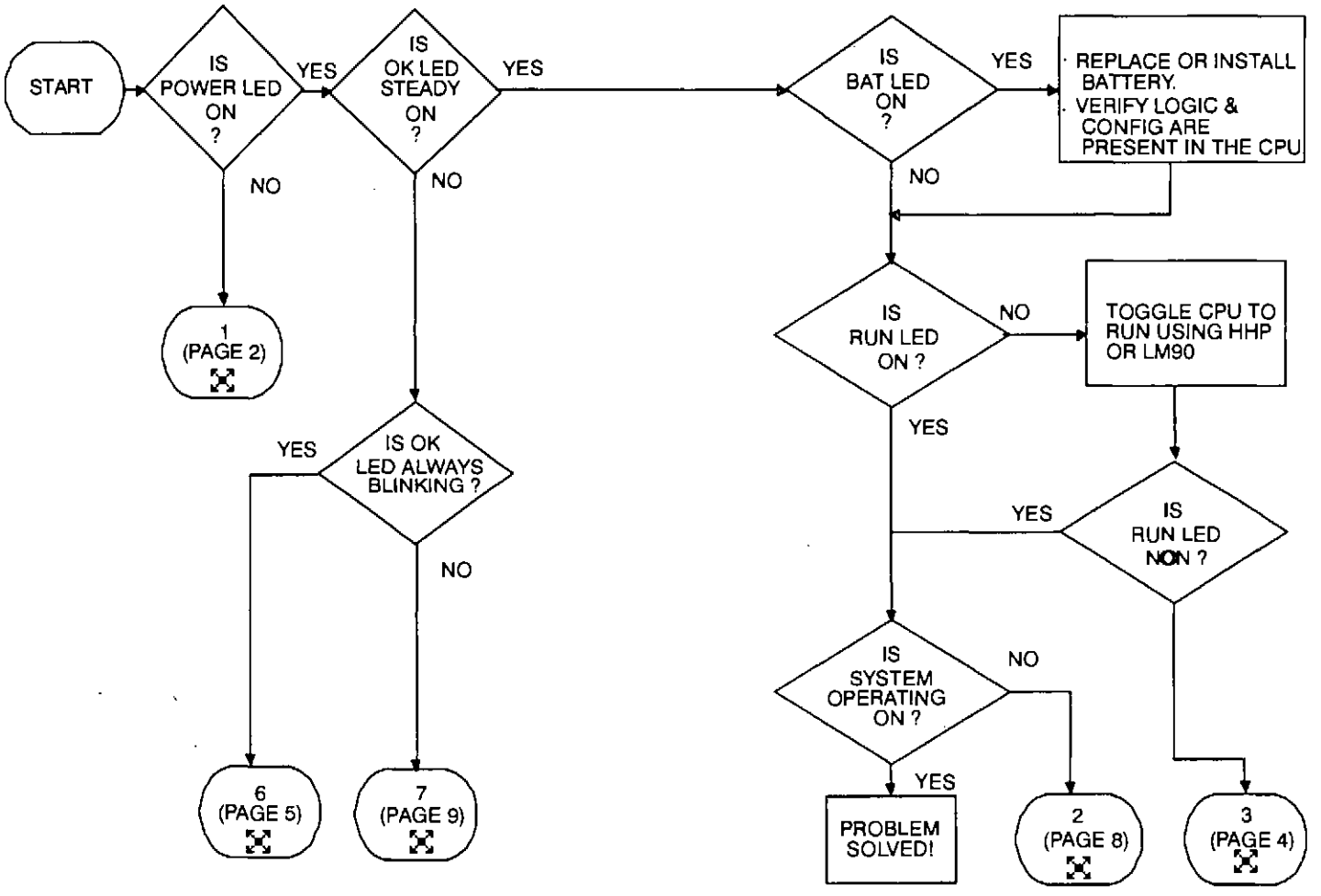

PAGE 1

(Refer to the Preface for information on safety considerations, related publications and the symbols used in this guide.)

DIA30AL
GFZ-0085

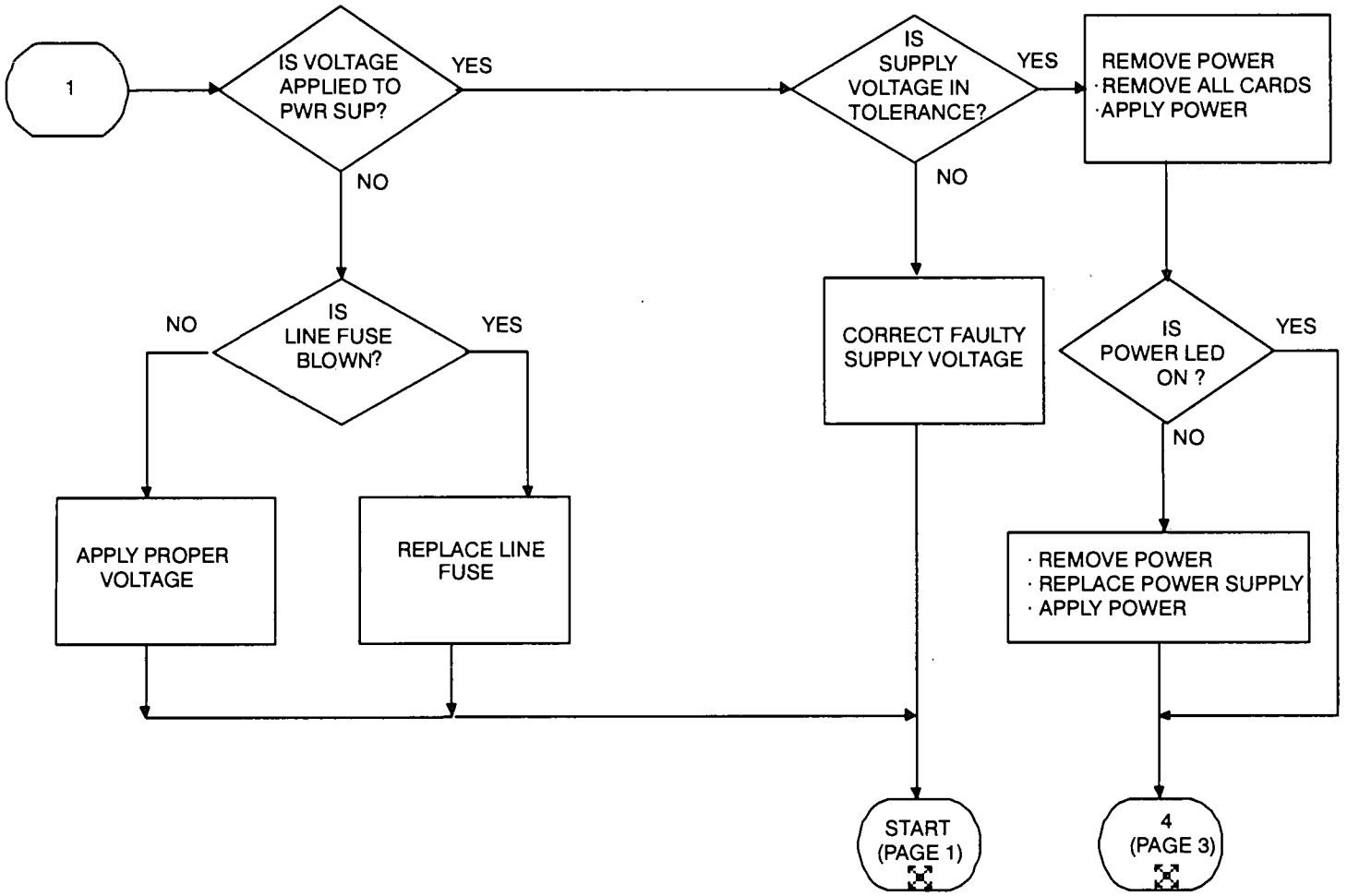

PAGE 2

DIA30BL

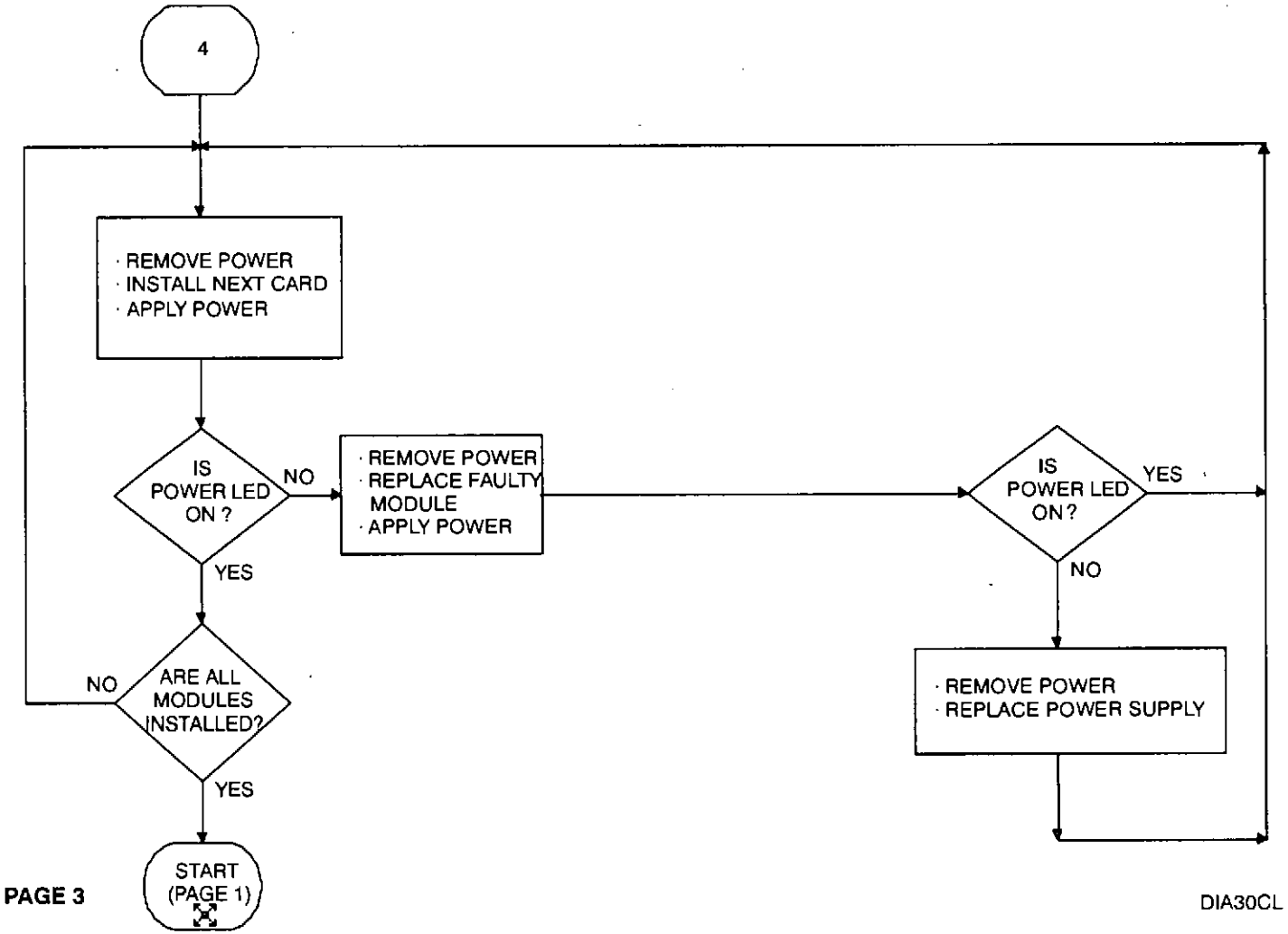
4
· REMOVE POWER
· INSTALL NEXT CARD
· APPLY POWER
IS POWER LED ON ?
NO
· REMOVE POWER
· REPLACE FAULTY MODULE
· APPLY POWER
IS POWER LED ON?
YES
NO
YES
ARE ALL MODULES INSTALLED?
NO
YES
· REMOVE POWER
· REPLACE POWER SUPPLY
START (PAGE 1)
PAGE 3
DIA30CL

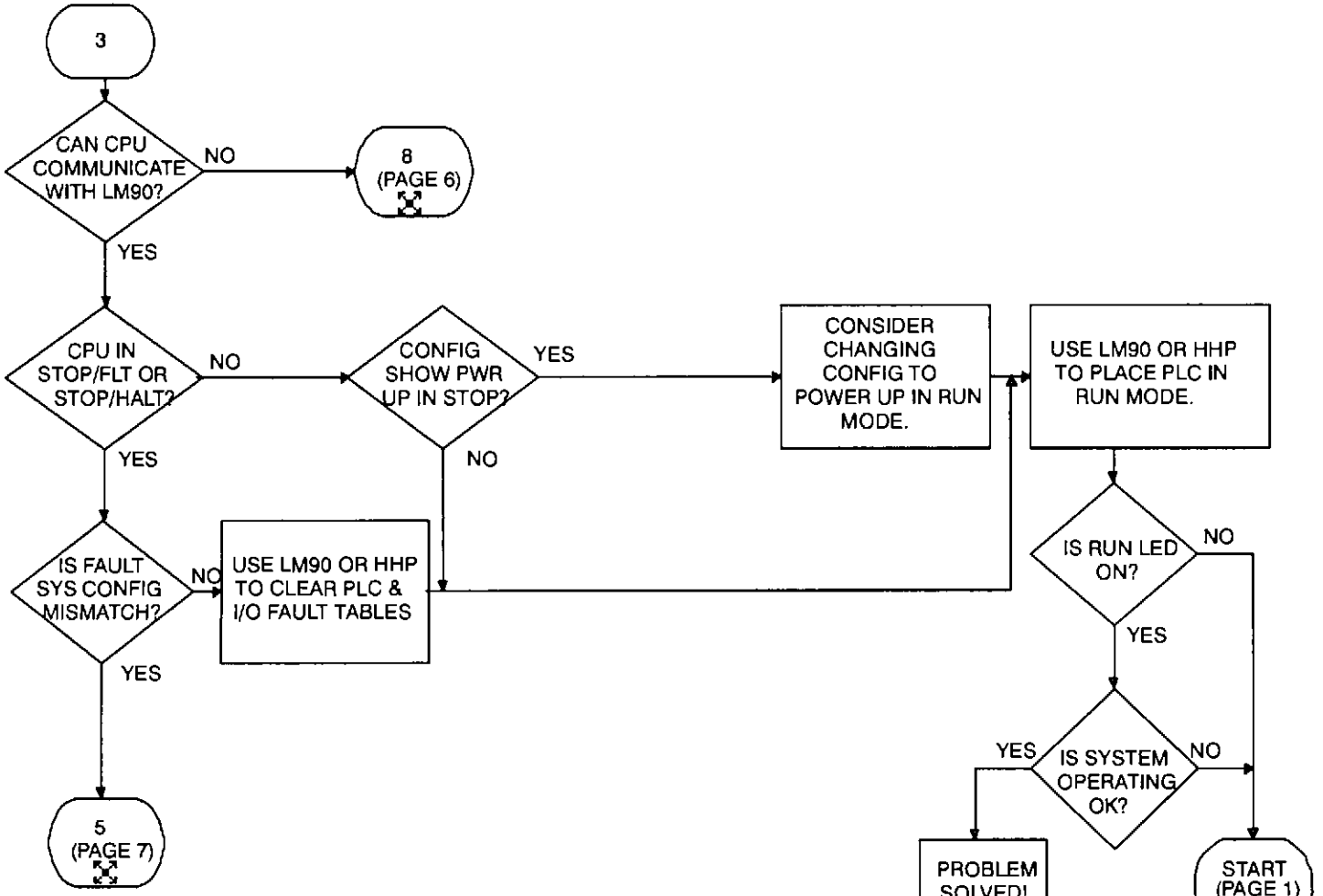

PAGE 4

DIA30DL

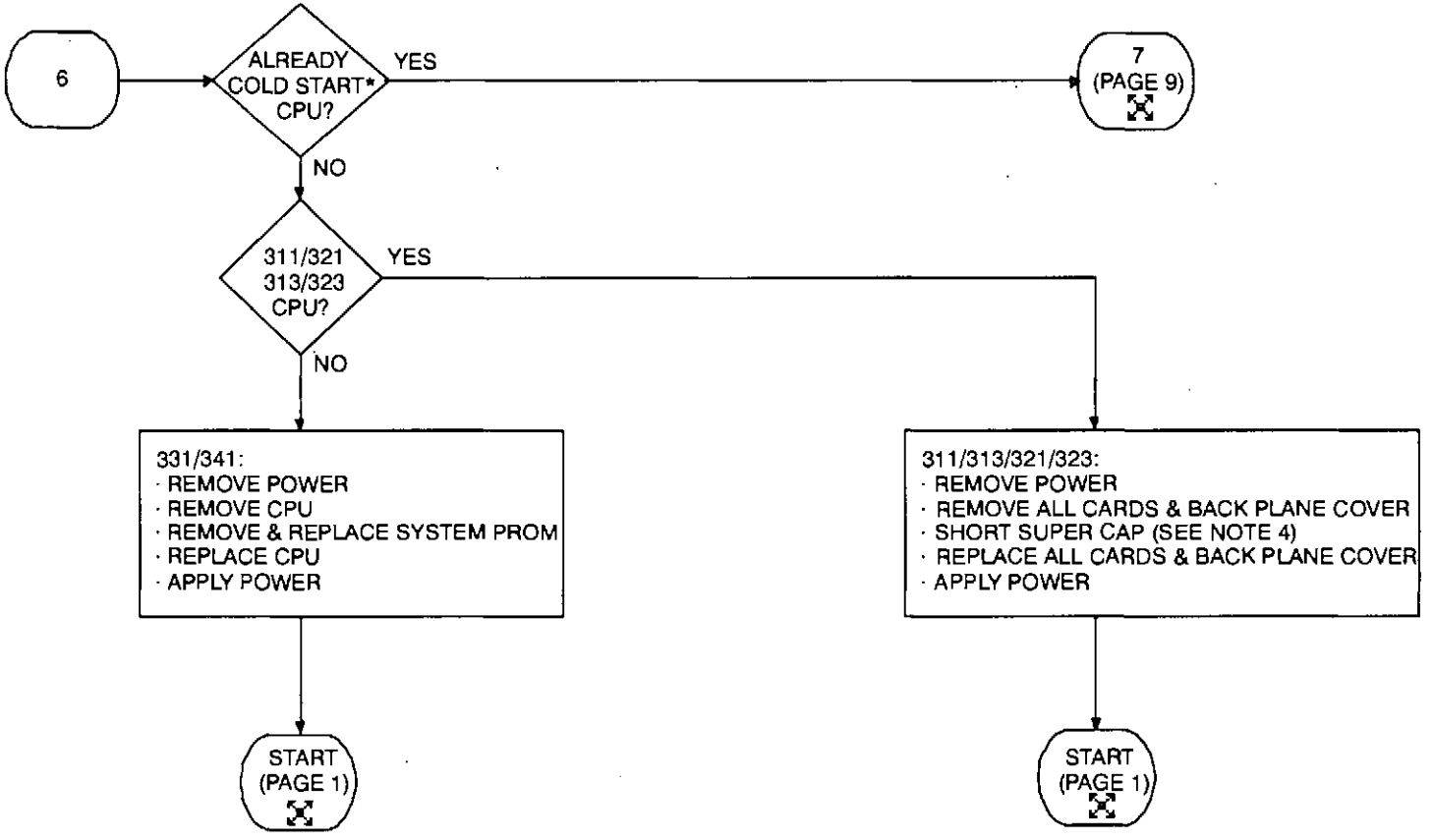

*COLD START DELETES THE CONTENTS OF THE CPU'S MEMORY AND RESTORES COMMUNICATION PARAMETERS (BAUD RATE, PARITY, ETC.) TO THEIR DEFAULT VALUES.

PAGE 5

DIA30EL

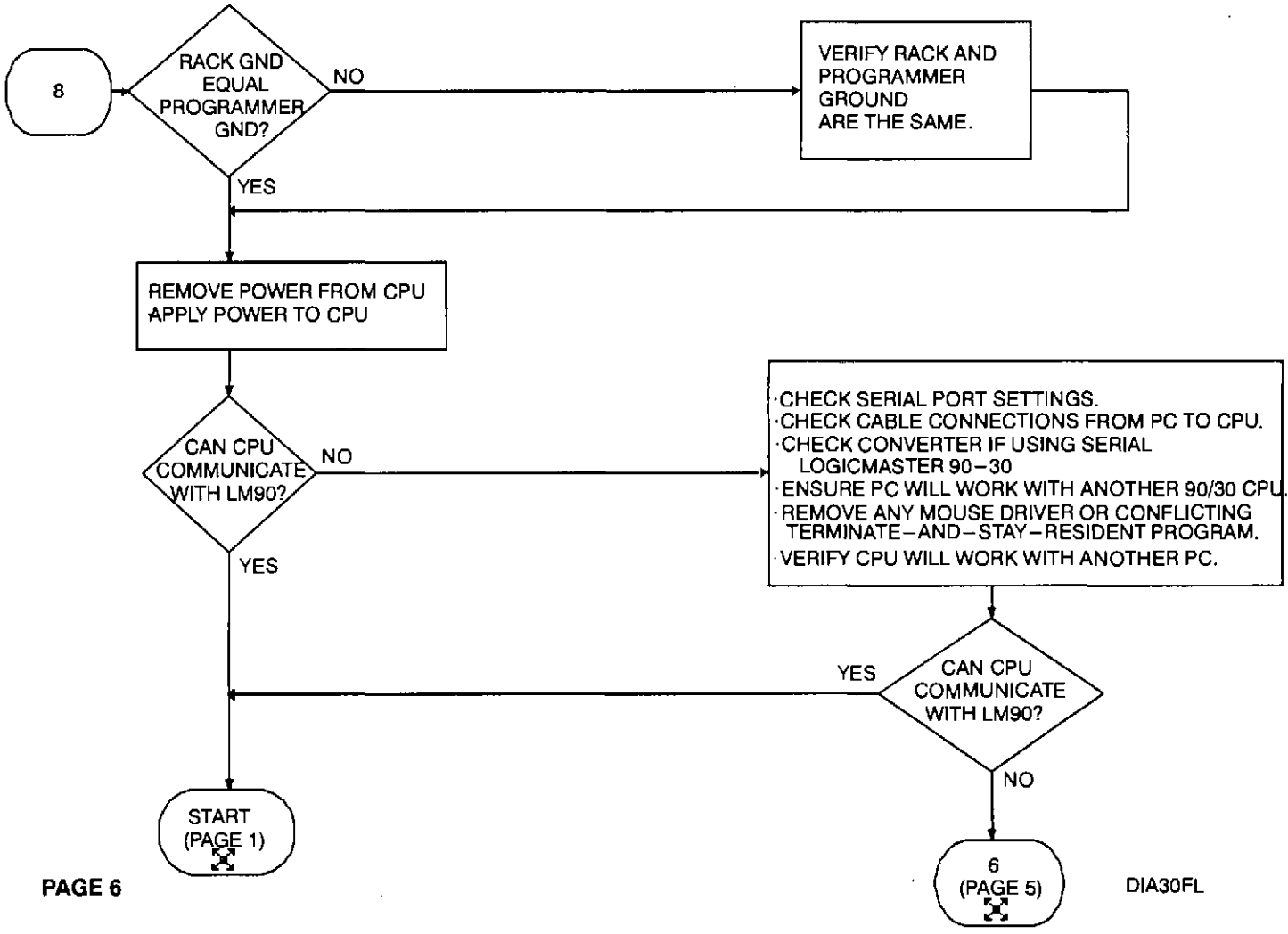
8
RACK GND EQUAL PROGRAMMER GND?
NO
VERIFY RACK AND PROGRAMMER GROUND ARE THE SAME.
YES
REMOVE POWER FROM CPU
APPLY POWER TO CPU
CAN CPU COMMUNICATE WITH LM90?
NO
·CHECK SERIAL PORT SETTINGS.
·CHECK CABLE CONNECTIONS FROM PC TO CPU.
·CHECK CONVERTER IF USING SERIAL LOGICMASTER 90–30
·ENSURE PC WILL WORK WITH ANOTHER 90/30 CPU.
·REMOVE ANY MOUSE DRIVER OR CONFLICTING TERMINATE–AND–STAY–RESIDENT PROGRAM.
·VERIFY CPU WILL WORK WITH ANOTHER PC.
YES
CAN CPU COMMUNICATE WITH LM90?
YES
NO
START (PAGE 1)
6 (PAGE 5)
PAGE 6
DIA30FL

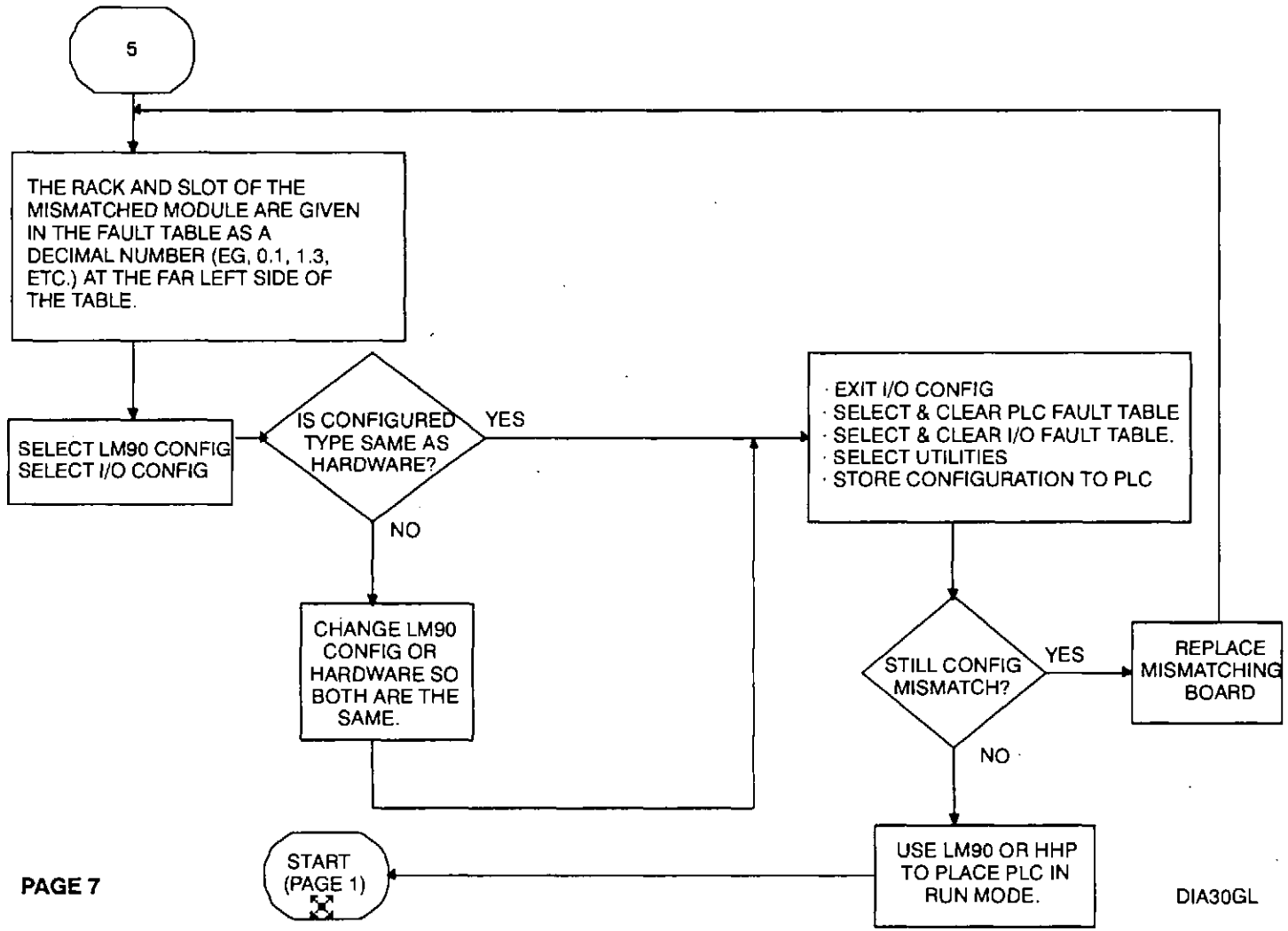
5
THE RACK AND SLOT OF THE MISMATCHED MODULE ARE GIVEN IN THE FAULT TABLE AS A DECIMAL NUMBER (EG, 0.1, 1.3, ETC.) AT THE FAR LEFT SIDE OF THE TABLE.
SELECT LM90 CONFIG
SELECT I/O CONFIG
IS CONFIGURED TYPE SAME AS HARDWARE?
YES
NO
· EXIT I/O CONFIG
· SELECT & CLEAR PLC FAULT TABLE
· SELECT & CLEAR I/O FAULT TABLE.
· SELECT UTILITIES
· STORE CONFIGURATION TO PLC
CHANGE LM90 CONFIG OR HARDWARE SO BOTH ARE THE SAME.
STILL CONFIG MISMATCH?
YES
REPLACE MISMATCHING BOARD
NO
USE LM90 OR HHP TO PLACE PLC IN RUN MODE.
START (PAGE 1)
PAGE 7
DIA30GL

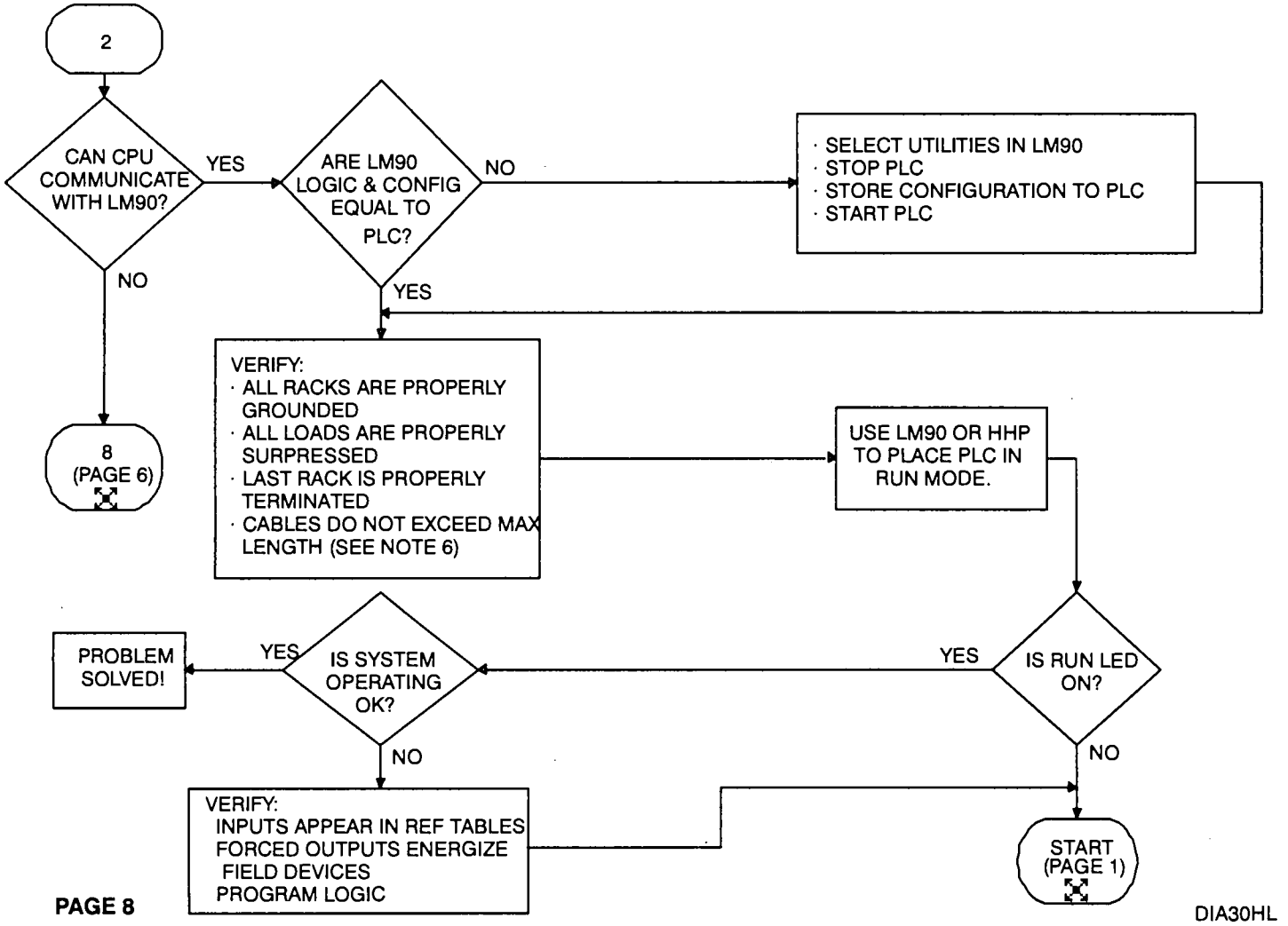
2
CAN CPU COMMUNICATE WITH LM90?
YES
ARE LM90 LOGIC & CONFIG EQUAL TO PLC?
NO
· SELECT UTILITIES IN LM90
· STOP PLC
· STORE CONFIGURATION TO PLC
· START PLC
NO
YES
8 (PAGE 6)
VERIFY:
· ALL RACKS ARE PROPERLY GROUNDED
· ALL LOADS ARE PROPERLY SURPRESSED
· LAST RACK IS PROPERLY TERMINATED
· CABLES DO NOT EXCEED MAX LENGTH (SEE NOTE 6)
USE LM90 OR HHP TO PLACE PLC IN RUN MODE.
PROBLEM SOLVED!
YES
IS SYSTEM OPERATING OK?
YES
IS RUN LED ON?
NO
NO
VERIFY:
INPUTS APPEAR IN REF TABLES
FORCED OUTPUTS ENERGIZE FIELD DEVICES
PROGRAM LOGIC
START (PAGE 1)
PAGE 8
DIA30HL

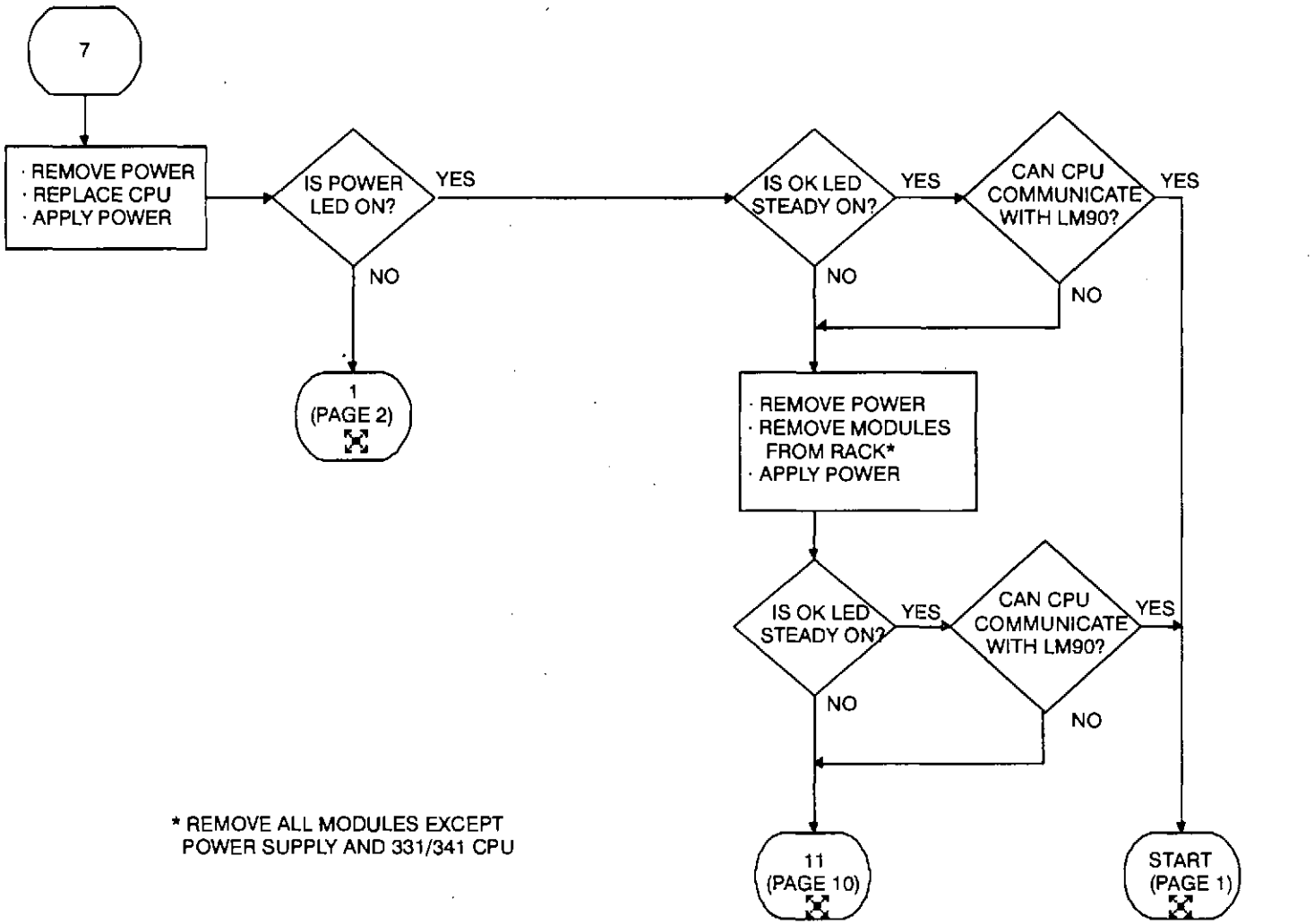

* REMOVE ALL MODULES EXCEPT POWER SUPPLY AND 331/341 CPU

PAGE 9

DIA30JL

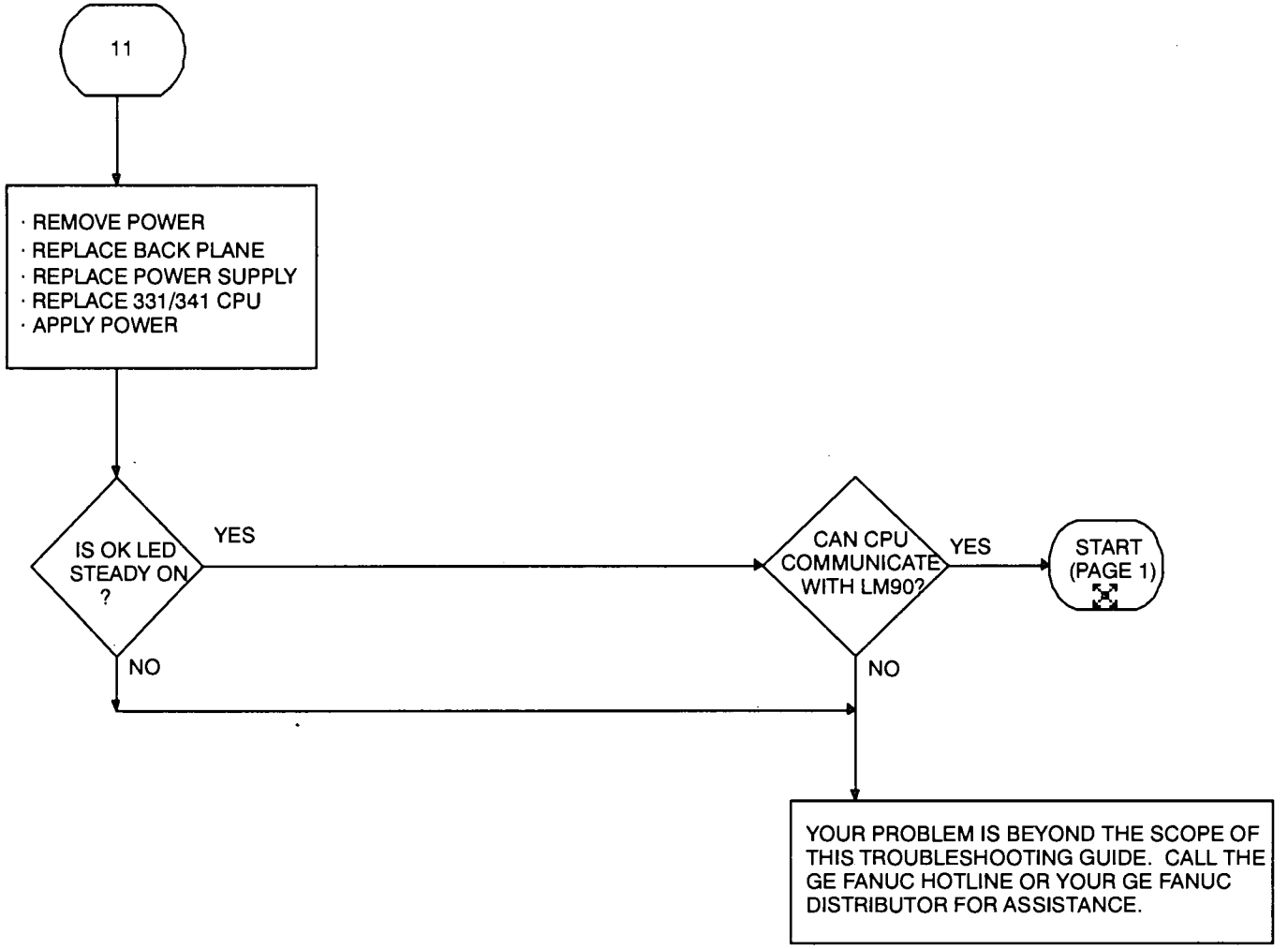

PAGE 10

DIA30KL

POWER EQUIPMENT

ESTABLISHED 1981

DIESEL STANDBY GENERATOR

LOCAL CONTROL PANEL

FUNCTIONAL DESCRIPTION

FOR

Brisbane City Council

19th May 2003

ABBREVIATIONS

G1 Generator 1 Diesel

1. GENERAL

1.1. The PLC for the above operation is a GE Fanuc IC693CPU350. This program has been designed for the use on G1. The operation below controls G1.

1.2. A mode selector switch selects how G1 shall operate :

1.2.1. Off

1.2.2. Manual Mode

1.2.3. Test Mode.

1.2.4. Automatic Mode.

2. MANUAL MODE

2.1. To operate G1 in MANUAL Mode.

2.2. Select this operation by turning the AUTO – TEST – MAN- OFF selector switch to the MANUAL position.

2.3. Press the MANUAL START push button to start the generator.

2.4. The generator will begin to crank.

2.4.1. If it fails to start within the 10 seconds, the starter motor is stopped and a delay of 10 seconds before it will attempt to restart.

2.4.2. The generator set is allowed 3 attempts to start.

2.4.3. If it fails to start on the third attempt, the generator is locked out on FAIL TO START Alarm.

2.4.4. When the generator starts, the starter motor is stopped by a stop cranking input which measures the speed of the generator.

2.4.5. Once the generator has started, there is a 10 second time delay for the oil pressure to stabilise.

2.4.6. If the oil pressure is not up to pressure after the 10 second time delay, the generator shall shut down on LOW OIL PRESS Alarm.

2.4.7. Once the generator is running there is a 5 second warm up time before it is ready to accept load.

2.5. To Manual Transfer to Generator in the MANUAL Mode.

2.5.1. Start the generator and wait for the generator to run up to speed and voltage and ready to accept load.

2.5.2. Press the MANUAL TRANSFER TO GEN push button.

2.5.3. The MAINS ATS shall Open.

2.5.4. After a 30 second delay the GEN ATS shall Close.

2.5.5. If the MAINS ATS fails to Open.

2.5.5.1. After a 5 second delay an Alarm shall be generated and the MAINS CONNECTED indicator shall flash to indicate the Alarm.

2.5.5.2. The system shall return back to MAINS ATS operation.

2.5.6. If the GEN ATS fails to Close.

2.5.6.1. After a 5 second delay an Alarm shall be generated and the GENERATOR CONNECTED indicator shall flash to indicate the Alarm.

2.5.6.2. The system shall return back to MAINS ATS operation.

2.6. To Manual Transfer to Mains in the MANUAL Mode.

2.6.1. The GENERATOR ATS is Closed.

2.6.2. Press the MAN TRANSFER TO MAINS push button.

2.6.3. The GEN ATS shall Open.

2.6.4. After a 30 second delay the MAINS ATS shall Close.

2.6.5. If the GEN ATS fails to Open.

2.6.5.1. After a 5 second delay an Alarm shall be generated and the GENERATOR CONNECTED indicator shall flash to indicate the Alarm.

2.6.5.2. The system shall return back to GEN ATS operation.

2.6.6. If the MAINS ATS fails to Close.

2.6.6.1. After a 5 second delay an Alarm shall be generated and the MAINS CONNECTED indicator shall flash to indicate the Alarm.

2.6.6.2. The system shall return back to GEN ATS operation.

2.7. To stop the generator in the MANUAL Mode.

2.7.1. When the generator is running, it may be stopped by pressing the MANUAL STOP push button.

2.7.2. If the generator is still GEN ATS operation. The MANUAL TRANSFER TO MAINS is initiated.

2.7.3. When the GEN ATS is Open, the generator will enter the cool down time of 1 second.

2.7.4. After the cool down time, the generator will shut down.

2.7.5. Once the generator has shut down there is a 15 second delay before it may be restarted. This is to ensure the engine has mechanically stopped.

3. NON-PERMANENT SITE, MANUAL MODE

3.1. To operate G1 in a Non-Permanent Site Location in MANUAL Mode.

3.2. Connect the generator cables to the site generator CB ensuring the site generator CB is OFF. See BCC procedures.

3.3. A plug with shorting links is required to be installed. It is required to be plugged into the 27 Pin Station Plug.

3.3.1. Pins 11 and 12 are required to be connected. This is to indicate that the Mains ATS is Closed. If they are not connected a MAINS ATS Alarm shall be indicated.

3.4. Select from the AUTO – TEST – MAN- OFF selector switch to the MANUAL position.

3.5. Press the MANUAL START push button to start the generator.

3.6. The generator will begin to crank.

3.6.1. If it fails to start within the 10 seconds, the starter motor is stopped and a delay of 10 seconds before it will attempt to restart.

3.6.2. The generator set is allowed 3 attempts to start.

3.6.3. If it fails to start on the third attempt, the generator is locked out on FAIL TO START Alarm.

3.6.4. When the generator starts, the starter motor is stopped by a stop cranking input which measures the speed of the generator.

3.6.5. Once the generator has started, there is a 10 second time delay for the oil pressure to stabilise.

3.6.6. If the oil pressure is not up to pressure after the 10 second time delay, the generator shall shut down on LOW OIL PRESS Alarm.

3.6.7. Once the generator is running there is a 5 second warm up time before it is ready to accept load.

3.7. To connect the generator to the site load.

3.7.1. Manually switch over to the generator supply via the site CB's. See BCC procedures.

3.7.2. Do not use the MANUAL TRANSFER TO GEN or the MAN TRANSFER TO MAINS push buttons.

3.8. To disconnect the generator from the site load.

3.8.1. Manually switch over to the mains supply via the site CB's. See BCC procedures.

3.8.2. Do not use the MANUAL TRANSFER TO GEN or the MAN TRANSFER TO MAINS push buttons.

3.9. To stop the generator in the MANUAL Mode.

3.9.1. When the generator is running, it may be stopped by pressing the MANUAL STOP push button.

3.9.2. The generator will enter the cool down time of 1 second.

3.9.3. After the cool down time, the generator will shut down.

3.9.4. Once the generator has shut down there is a 15 second delay before it may be restarted. This is to ensure the engine has mechanically stopped.

4. TEST OPERATION

4.1. To operate the generator in the TEST Mode.

4.2. Select this operation by turning the AUTO – TEST – MAN- OFF selector switch to the TEST position.

4.3. If the selector is changed to MAN while the generator is operating on TEST, the system shall change to MANUAL TRANSFER TO GEN.

4.4. The generator shall begin to crank.

4.4.1. If it fails to start within the 10 seconds, the starter motor is stopped and a delay of 10 seconds before it will attempt to restart.

4.4.2. The generator is allowed 3 attempts to start.

4.4.3. If it fails to start on the third attempt, the generator is faulted on FAIL TO START Alarm.

4.5. When the generator starts, the starter motor is stopped by a stop cranking input which measures the speed of the generator.

4.6. The MAINS ATS shall Open.

4.7. Once the generator has started, there is a 10 second time delay for the oil pressure to stabilise.

4.8. If the oil pressure is not up to pressure after the 10 second time delay, the generator shall shut down on LOW OIL PRESS Alarm.

4.9. Once the generator is running there is a 5 second warm up time before it is ready to accept load.

4.10. After the warm up time has expired and the MAINS ATS has been open for 30 seconds the GEN ATS shall Close.

4.11. If the MAINS ATS fails to Open.

4.11.1. After a 5 second delay an Alarm shall be generated and the MAINS CONNECTED indicator shall flash to indicate the Alarm.

4.11.2. The system shall shut down and return back to MAINS ATS operation.

4.12. If the GEN ATS fails to Close.

4.12.1. After a 5 second delay an Alarm shall be generated and the GENERATOR CONNECTED indicator shall flash to indicate the Alarm.

4.12.2. The system shall shut down and return back to MAINS ATS operation.

4.13. To stop the generator in the TEST Mode.

4.13.1. Select this operation by turning the AUTO – TEST – MAN- OFF selector switch to the AUTO or OFF position.

4.13.2. The GEN ATS shall Open.

4.13.3. After a 30 second delay the MAINS ATS shall Close.

4.13.4. If the GEN ATS fails to Open.

4.13.4.1. After a 5 second delay an Alarm shall be generated and the GENERATOR CONNECTED indicator shall flash to indicate the Alarm.

4.13.4.2. The system shall return back to GEN ATS operation.

4.13.5. If the MAINS ATS fails to Close.

4.13.5.1. After a 5 second delay an Alarm shall be generated and the MAINS CONNECTED indicator shall flash to indicate the Alarm.

4.13.5.2. The system shall return back to GEN ATS operation.

4.13.6. When the GEN ATS is Open, the generator will enter the cool down time of 5 minutes.

4.13.7. After the cool down time, the generator will shut down.

4.13.8. If a Mains Failure occurs during the cool down period the generator shall transfer back to the GENERATOR ATS without shutting down.

4.13.9. Once the generator has shut down there is a 15 second delay before it may be restarted. This is to ensure the engine has mechanically stopped.

5. AUTOMATIC OPERATION

5.1. To operate the generator in the AUTO Mode.

5.2. Select this operation by turning the AUTO – TEST – MAN- OFF selector switch to the AUTO position.

5.3. The Phase Failure Relay from the clients switch board shall give a Start Signal for the generators to run.

5.4. The Remote Start Command.

5.4.1. The generator shall begin to crank.

5.4.1.1. If it fails to start within the 10 seconds, the starter motor is stopped and a delay of 10 seconds before it will attempt to restart.

5.4.1.2. The generator is allowed 3 attempts to start.

5.4.1.3. If it fails to start on the third attempt, the generator is faulted on FAIL TO START Alarm.

5.4.2. When the generator starts, the starter motor is stopped by a stop cranking input which measures the speed of the generator.

5.4.3. The MAINS ATS shall Open.

5.4.4. Once the generator has started, there is a 10 second time delay for the oil pressure to stabilise.

5.4.5. If the oil pressure is not up to pressure after the 10 second time delay, the generator shall shut down on LOW OIL PRESS Alarm.

5.4.6. Once the generator is running there is a 5 second warm up time before it is ready to accept load.

5.4.7. After the warm up time has expired and the MAINS ATS has been open for 30 seconds the GEN ATS shall Close.

5.4.8. If the MAINS ATS fails to Open.

5.4.8.1. After a 5 second delay an Alarm shall be generated and the MAINS CONNECTED indicator shall flash to indicate the Alarm.

5.4.8.2. The system shall shut down and return back to MAINS ATS operation.

5.4.9. If the GEN ATS fails to Close.

5.4.9.1. After a 5 second delay an Alarm shall be generated and the GENERATOR CONNECTED indicator shall flash to indicate the Alarm.

5.4.9.2. The system shall shut down and return back to MAINS ATS operation.

5.5. To stop the generator in the AUTO Mode.

5.5.1. The Phase Failure Relay from the clients switch board shall give a Stop Signal for the generators to run.

5.5.2. The Remote Stop Command.

5.5.3. There is a 2 minute proving time for the Phase Failure Relay.

5.5.4. After the 2 minute proving time the GEN ATS shall Open.

5.5.5. After a 30 second delay the MAINS ATS shall Close.

5.5.6. If the GEN ATS fails to Open.

5.5.6.1. After a 5 second delay an Alarm shall be generated and the GENERATOR CONNECTED indicator shall flash to indicate the Alarm.

5.5.6.2. The system shall return back to GEN ATS operation.

5.5.7. If the MAINS ATS fails to Close.

5.5.7.1. After a 5 second delay an Alarm shall be generated and the MAINS CONNECTED indicator shall flash to indicate the Alarm.

5.5.7.2. The system shall return back to GEN ATS operation.

5.5.8. When the GEN ATS is Open, the generator will enter the cool down time of 5 minutes.

5.5.9. After the cool down time, the generator will shut down.

5.5.10. If a Mains Failure occurs during the cool down period the generator shall transfer back to the GENERATOR ATS without shutting down.

5.5.11. Once the generator has shut down there is a 15 second delay before it may be restarted. This is to ensure the engine has mechanically stopped.

6. FAULT OPERATION

6.1. Emergency Stop Operation.

6.1.1. Operation of the Emergency Stop push button immediately shuts down the generator and Opens the Generator CB. The Emergency Stop is latched, and requires manual resetting to release the Emergency Stop push button.

6.1.2. After the Emergency Stop push button is released, a fault reset will need to be initiated to reset the PLC.

6.2. HIGH HIGH Alarm Operation.

6.2.1. The Generator CB is Opened immediately.

6.2.2. The generator is shut down immediately.

6.2.3. The following alarms will initiate a HIGH HIGH Alarm condition :-

6.2.3.1. Emergency Stop Fault

6.2.3.2. MEN Fault

6.2.3.3. Low Oil Pressure Shutdown Fault, 10 Seconds Startup Delay

6.2.3.4. High Engine Temperature Shutdown Fault, 30 Second Startup Delay

6.2.3.5. Low Radiator Level Fault, 5 Second Delay

6.2.3.6. Over Speed Fault

6.3. HIGH Alarm Operation

6.3.1. The Generator CB is Opened immediately.

6.3.2. Once the generator circuit breaker is opened, the generator will run through its normal cool down time and shut down.

6.3.3. The following alarms will initiate a HIGH Alarm condition:-

6.3.3.1. Generator Under Speed Fault, 5 Second Delay

6.3.3.2. Alternator Under Voltage Fault, 5 Second Delay

6.3.3.3. Alternator Over Voltage Fault, 5 Second Delay

6.3.3.4. Generator CB Tripped Fault

6.3.3.5. Alternator High Temperature Fault, 30 Second Startup Delay

6.4. MEDIUM Alarm Operation.

6.4.1. A Normal Shutdown shall be Initiated.

6.4.2. If the GEN ATS does not Open then the Generator CB is Opened.

6.4.3. The following alarms will initiate a MEDIUM Alarm condition :-

6.4.3.1. Fuel Empty Level Fault, 5 Second Delay

6.4.3.2. Fail To Start Fault, 3 Attempts

6.5. LOW Alarm Operation.

6.5.1. A Warning has occurred on the generator. The generator will not shut down.

6.5.2. The following alarms will initiate a LOW Alarm condition :-

6.5.2.1. Low Oil Pressure Warning Alarm, 10 Seconds Startup Delay

6.5.2.2. High Engine Temperature Warning Alarm, 30 Second Startup Delay

6.5.2.3. Fuel Low Level Alarm, 5 Second Delay

6.5.2.4. Battery Charger AC Supply Failed Alarm, 60 Second Delay

6.5.2.5. Control Battery Low Volts Alarm, 30 Second Delay

6.5.2.6. Start Battery Low Volts Alarm, 60 Second Delay

Table of Contents

Overview 1
Main Rack: Base 10 Slot (IC693CHS391) 1
Detailed View 2
IC693PWR331 Power Supply 24 VDC 30W 2
Power Consumption 2
Settings 2
IC693CPU350 Series 90-30 CPU Model 350 2
Settings 2
Scan 2
Memory 2
Power Consumption 3
IC693CMM311 Communications Coprocessor 3
Settings 3
Port 1 3
Port 2 3
Power Consumption 3
IC693MDL645 16 Circuit Input 24 VDC Positive / Negative Logic 3
Settings 3
Wiring 3
Power Consumption 3
IC693MDL645 16 Circuit Input 24 VDC Positive / Negative Logic 4
Settings 4
Wiring 4
Power Consumption 4
IC693MDL645 16 Circuit Input 24 VDC Positive / Negative Logic 4
Settings 4
Wiring 4
Power Consumption 4
IC693MDL940 16 Circuit Output Relay 2A 4
Settings 4
Wiring 4
Power Consumption 4
IC693MDL940 16 Circuit Output Relay 2A 5
Settings 5
Wiring 5
Power Consumption 5
IC693MDL940 16 Circuit Output Relay 2A 5
Settings 5
Wiring 5
Power Consumption 5
Reference Details 6
%I References 6
%Q References 6

11/06/04 3:02 BCC_4000_4 Page: 1

Main Rack: Base 10 Slot (IC693CHS391)

Main Rack: Slot 0

IC693PWR331 Power Supply 24 VDC 30W

Power Consumption

Voltages / Supplied

+5VDC (Watts) 30
+24VDC Relay Power (Watts) 15
+24VDC Isolated (Watts) 20
Total System: 30

Settings

Parameters / Values

Hand Held Programmer: No
Converter: 0

Main Rack: Slot 1

IC693CPU350 Series 90-30 CPU Model 350

Settings

Parameters / Values

I/O Scan-Stop: No
Power Up Mode: Run
Logic / Configuration From: RAM
Registers: RAM
Passwords: Disabled
Checksum Words: 8
Data Rate (bps): 19200
Parity: Odd
Stop Bits: 1
Modem Turnaround Time (.01 Sec / Count): 0
Idle Time (Sec): 10
Timer Faults: Disabled
SNP ID:
Key Switch Run/Stop: Enabled
Memory Protect: Disabled
Ignore Fatal Faults: Disabled

Scan

Parameters / Values

Sweep Mode: Normal
Sweep Timer (mSec): N/A

Memory

Parameters / Values

%I Discrete Input: 2048
%Q Discrete Output: 2048
%S System Use: 128
%M Internal Discrete: 4096
%T Temporary Status: 256
%G Genius® Global: 1280
%AI Analog Input: 2048
%AQ Analog Output: 512
%R Register Memory: 9999

Power Consumption

Parameters / Values

+5VDC (Watts) 3.35
+24VDC Relay Power (Watts) 0
+24VDC Isolated (Watts) 0

Main Rack: Slot 2

IC693CMM311 Communications Coprocessor

Settings

Parameters / Values

Configuration Mode: RTU Only

Port 1

Parameters / Values

RTU Enable: Yes
Data Rate (bps): 9600
Flow Control: None
Parity: None
Station Address: 1

Port 2

Parameters / Values

RTU Enable: Yes
Interface: RS485
Data Rate (bps): 9600
Flow Control: None
Parity: None
Station Address: 1

Power Consumption

Parameters / Values

+5VDC (Watts) 2.00
+24VDC Relay Power (Watts) 0
+24VDC Isolated (Watts) 0

Main Rack: Slot 3

IC693MDL645 16 Circuit Input 24 VDC Positive / Negative Logic

Settings

Parameters / Values

Reference Address: %I00001
Length: 16

Wiring

Terminal / Wiring Information

From Terminal 1 to Terminal 20 : No wiring information.

Power Consumption

Parameters / Values

+5VDC (Watts) 0.40
+24VDC Relay Power (Watts) 0

+24VDC Isolated (Watts) 0.6

Main Rack: Slot 4

IC693MDL645 16 Circuit Input 24 VDC Positive / Negative Logic

Settings

Parameters / Values

Reference Address: %I00017
Length: 16

Wiring

Terminal / Wiring Information

From Terminal 1 to Terminal 20 : No wiring information.

Power Consumption

Parameters / Values

+5VDC (Watts) 0.40
+24VDC Relay Power (Watts) 0
+24VDC Isolated (Watts) 0.6

Main Rack: Slot 5

IC693MDL645 16 Circuit Input 24 VDC Positive / Negative Logic

Settings

Parameters / Values

Reference Address: %I00033
Length: 16

Wiring

Terminal / Wiring Information

From Terminal 1 to Terminal 20 : No wiring information.

Power Consumption

Parameters / Values

+5VDC (Watts) 0.40
+24VDC Relay Power (Watts) 0
+24VDC Isolated (Watts) 0.6

Main Rack: Slot 7

IC693MDL940 16 Circuit Output Relay 2A

Settings

Parameters / Values

Reference Address: %Q00001
Length: 16

Wiring

Terminal / Wiring Information

From Terminal 1 to Terminal 20 : No wiring information.

Power Consumption

Parameters / Values
+5VDC (Watts) 0.04
+24VDC Relay Power (Watts) 3.24
+24VDC Isolated (Watts) 0

Main Rack: Slot 8

IC693MDL940 16 Circuit Output Relay 2A

Settings

Parameters / Values
Reference Address: %Q00017
Length: 16

Wiring

Terminal / Wiring Information
From Terminal 1 to Terminal 20 : No wiring information.

Power Consumption

Parameters / Values
+5VDC (Watts) 0.04
+24VDC Relay Power (Watts) 3.24
+24VDC Isolated (Watts) 0

Main Rack: Slot 9

IC693MDL940 16 Circuit Output Relay 2A

Settings

Parameters / Values
Reference Address: %Q00033
Length: 16

Wiring

Terminal / Wiring Information
From Terminal 1 to Terminal 20 : No wiring information.

Power Consumption

Parameters / Values
+5VDC (Watts) 0.04
+24VDC Relay Power (Watts) 3.24
+24VDC Isolated (Watts) 0

%I References

Overlap	Start	End	Addr	Mem Type	Cat Num
	1	16	(0.3)	Consumed	IC693MDL645
	17	32	(0.4)	Consumed	IC693MDL645
	33	48	(0.5)	Consumed	IC693MDL645

Total %I: 48 Highest Reference: 48

%Q References

Overlap	Start	End	Addr	Mem Type	Cat Num
	1	16	(0.7)	Produced	IC693MDL940
	17	32	(0.8)	Produced	IC693MDL940
	33	48	(0.9)	Produced	IC693MDL940

Total %Q: 48 Highest Reference: 48

Name	Type	Len	Address	Description	Stored Val	Scope	Ret	Ovr	E
SEL_AUTO	BIT	1	%I00001	Selector Switch Auto		Global	R		
SEL_TEST	BIT	1	%I00002	Selector Switch Test		Global	R		
SEL_MAN	BIT	1	%I00003	Selector Switch Manual		Global	R		
EM_STOP_PB	BIT	1	%I00004	Emergency Stop PB		Global	R		
LAMP_TEST_PB	BIT	1	%I00005	Lamp Test PB		Global	R		
[illegible]_RESET_PB	BIT	1	%I00006	Alarm Reset PB		Global	R		
[illegible]_MUTE_PB	BIT	1	%I00007	Alarm Mute PB		Global	R		
MAN_STR_PB	BIT	1	%I00008	Manaul Start PB		Global	R		
MAN_STP_PB	BIT	1	%I00009	Manual Stop PB		Global	R		
MAN_TRF_MAINS_PB	BIT	1	%I00010	Manual Transfer to Mains PB		Global	R		
MAN_TRF_GEN_PB	BIT	1	%I00011	Manual Transfer to Generator PB		Global	R		
SPD_STP_CRK	BIT	1	%I00017	Crank Cutout Relay		Global	R		
SPD_UNDER	BIT	1	%I00018	Under Speed Relay		Global	R		
SPD_OVER	BIT	1	%I00019	Over Speed Relay		Global	R		
VOLTS_UNDER	BIT	1	%I00020	Under Voltage Relay		Global	R		
VOLTS_OVER	BIT	1	%I00021	Over Voltage Relay		Global	R		
ALT_TEMP	BIT	1	%I00022	Alternator High Temperature Relay		Global	R		
GEN_CB_TRIP	BIT	1	%I00023	Generator CB Tripped		Global	R		
MEN_FLT	BIT	1	%I00024	MEN Fault Relay		Global	R		
BAT_CHG_AC	BIT	1	%I00025	Battery Charger AC Relay		Global	R		
BAT_CONT_LOW_V	BIT	1	%I00026	Control Battery Charger Low Voltage		Global	R		
BAT_STR_LOW_V	BIT	1	%I00027	Start Battery Charger Low Voltage		Global	R		
MAINS_FAILED	BIT	1	%I00033	BCC Mains Failed		Global	R		
MAINS_ATS_CLS	BIT	1	%I00034	BCC Mains ATS Closed		Global	R		
[illegible]_ATS_CLS	BIT	1	%I00035	BCC Generator ATS Closed		Global	R		
[illegible]_STR	BIT	1	%I00036	BCC Remote Start		Global	R		
REM_STP	BIT	1	%I00037	BCC Remote Stop		Global	R		
OIL_P_LOW_SD	BIT	1	%I00041	Low Oil Pressure Shutdown		Global	R		
OIL_P_LOW_W	BIT	1	%I00042	Low Oil Pressure Warning		Global	R		
ENG_T_HI_SD	BIT	1	%I00043	High Engine Temperature Shutdown		Global	R		
ENG_T_HI_W	BIT	1	%I00044	High Engine Temperature Warning		Global	R		
RAD_WATER_LOW	BIT	1	%I00045	Low Radiator Water Level		Global	R		
FUEL_LEV_LOW	BIT	1	%I00046	Low Fuel Level		Global	R		
FUEL_LEV_EMPTY	BIT	1	%I00047	Fuel Empty		Global	R		
CAN_DOORS_OPEN	BIT	1	%I00048	Canopy Doors Open		Global	R		
STEP_1	BIT	1	%M00001	Step Sequence No.1		Global			
STEP_2_E	BIT	1	%M00002	Step Sequence No.2		Global			
STEP_3	BIT	1	%M00003	Step Sequence No.3		Global			
STEP_4	BIT	1	%M00004	Step Sequence No.4		Global			
STEP_5	BIT	1	%M00005	Step Sequence No.5		Global			
STEP_6	BIT	1	%M00006	Step Sequence No.6		Global			
STEP_7	BIT	1	%M00007	Step Sequence No.7		Global			
STEP_8	BIT	1	%M00008	Step Sequence No.8		Global			
STEP_9	BIT	1	%M00009	Step Sequence No.9		Global			
STEP_2_GE	BIT	1	%M00022	Step Sequence No.2 GE		Global			
[illegible]_OFF	BIT	1	%M00101	Generator OFF		Global			
[illegible]_TEST_STR	BIT	1	%M00102	Auto_Test Start / Stop		Global			
REMOTE_STR	BIT	1	%M00103	Remote Start		Global			
MAINS_FAIL_STP	BIT	1	%M00104	Mains Failed Stop		Global			
REMOTE_STP	BIT	1	%M00105	Remote Stop		Global			
TEST_STR	BIT	1	%M00106	Test Start		Global			
TEST_STP	BIT	1	%M00107	Test Stop		Global			
GEN_RUN_OFF	BIT	1	%M00108	Generator Run Off		Global			
ENABLE_OFFLINE	BIT	1	%M00109	Enable Generator to go Offline		Global			
HH_ALM_OS1	BIT	1	%M00110	High High Alarm One Shot		Global			
H_ALM_OS1	BIT	1	%M00111	High Alarm One Shot		Global			
H_ALM_OS2	BIT	1	%M00112	High Alarm One Shot		Global			
M_ALM_OS1	BIT	1	%M00113	Medium Alarm One Shot		Global			
M_ALM_OS2	BIT	1	%M00114	Medium Alarm One Shot		Global			
M_ATS_ALM_OS1	BIT	1	%M00115	Mains ATS Alarm One Shot		Global			
M_ATS_ALM_OS2	BIT	1	%M00116	Mains ATS Alarm One Shot		Global			
MAINS_FAIL_STR	BIT	1	%M00117	Mains Fail Start		Global			
GEN_RUNNING	BIT	1	%M00201	Generator Running		Global			
FAIL_STR_TM	BIT	1	%M00202	Failed to Start Time		Global			
FAIL_STR_DLY	BIT	1	%M00203	Failed to Start Pulse Delay		Global			

Program: BCC_4000_4 A: GLOBAL VARIABL

Name	Type	Len	Address	Description	Stored Val	Scope	Ret	Ovr	E
FAIL_STR_CNT	BIT	1	%M00204	Failed to Start Counter		Global			
CRK_CUTOUT	BIT	1	%M00205	Generator Crank Cutout		Global			
ENB_STR_DLY	BIT	1	%M00206	Enable Start Delay for Alarms		Global			
OIL_P_DLY	BIT	1	%M00207	Oil Pressure Alarm Delay		Global			
[illegible]_UP_DLY	BIT	1	%M00208	Startup Alarm Delay		Global			
[illegible]TS_OPN_1	BIT	1	%M00209	Mains ATS Open Command		Global			
G_ATS_CLS_1	BIT	1	%M00210	Generator ATS Close Command		Global			
G_ATS_OPN_1	BIT	1	%M00211	Generator ATS Open Command		Global			
M_ATS_CLS_1	BIT	1	%M00212	Mains ATS Close Command		Global			
M_ATS_CLS_ENB	BIT	1	%M00213	Mains ATS Close Enable		Global			
G_ATS_CLS_ENB	BIT	1	%M00214	Generator ATS Close Enable		Global			
HIGH_HIGH_ALM	BIT	1	%M00300	High High Alarm		Global			
EM_STP_ALM	BIT	1	%M00301	Emergency Stop Alarm		Global			
MEN_ALM	BIT	1	%M00302	MEN Alarm		Global			
OIL_P_SD_ALM	BIT	1	%M00303	Low Oil Pressure Shutdown Alarm		Global			
ENG_T_SD_ALM	BIT	1	%M00304	High Engine Temperature Shutdown Alarm		Global			
RAD_WATER_LOW_ALM	BIT	1	%M00305	Low Radiator Water Level Alarm		Global			
SPD_OVER_ALM	BIT	1	%M00306	Over Speed Alarm		Global			
RAD_WATER_LOW_DLY	BIT	1	%M00315	Radiator Water Level Low Delay		Global			
SPD_OVER_DLY	BIT	1	%M00316	Over Speed Delay Timer		Global	R		
HIGH_ALM	BIT	1	%M00320	High Alarm		Global			
[illegible]_UNDER_ALM	BIT	1	%M00321	Under Speed Alarm		Global			
[illegible]TS_UNDER_ALM	BIT	1	%M00322	Alternator Voltage Under Alarm		Global			
VOLTS_OVER_ALM	BIT	1	%M00323	Alternator Voltage Over Alarm		Global			
GEN_CB_TRIP_ALM	BIT	1	%M00324	Generator CB Tripped Alarm		Global			
ALT_TEMP_ALM	BIT	1	%M00325	Alternator High Temperature Alarm		Global			
SPD_UNDER_DLY	BIT	1	%M00331	Under Speed Alarm Delay		Global			
VOLTS_UNDER_DLY	BIT	1	%M00332	Under Voltage Alarm Delay		Global			
VOLTS_OVER_DLY	BIT	1	%M00333	Over Voltage Alarm Delay		Global			
MEDIUM_ALM	BIT	1	%M00340	Medium Alarm		Global			
FUEL_LEV_EMPTY_ALM	BIT	1	%M00341	Fuel Empty Alarm		Global			
FAIL_TO_STR_ALM	BIT	1	%M00342	Fail to Start Alarm		Global			
FUEL_LEV_EMPTY_DLY	BIT	1	%M00351	Fuel Level Empty Alarm Delay		Global			
LOW_ALM	BIT	1	%M00360	Low Alarm		Global			
OIL_P_W_ALM	BIT	1	%M00361	Low Oil Pressure Warning Alarm		Global			
ENG_T_W_ALM	BIT	1	%M00362	High Engine Temperature Warning Alarm		Global			
FUEL_LEV_LOW_ALM	BIT	1	%M00363	Low Fuel Level Alarm		Global			
BAT_CHG_AC_ALM	BIT	1	%M00364	Battery Charger AC Alarm		Global			
[illegible]CONT_LOW_V_ALM	BIT	1	%M00365	Control Battery Charger Low Voltage Alarm		Global			
BAT_STR_LOW_V_ALM	BIT	1	%M00366	Start Battery Charger Low Voltage Alarm		Global			
FUEL_LEV_LOW_DLY	BIT	1	%M00373	Fuel Level Low Alarm Delay		Global	R		
BAT_CHG_AC_DLY	BIT	1	%M00374	Battery Charger AC Failure Delay		Global	R		
BAT_CONT_LOW_V_DLY	BIT	1	%M00375	Control Battery Low Voltage Delay		Global	R		
BAT_STR_LOW_V_DLY	BIT	1	%M00376	Start Battery Low Voltage Delay		Global	R		
MAINS_ATS_OPN_ALM	BIT	1	%M00381	Mains ATS Failed to Open Alarm		Global			
MAINS_ATS_CLS_ALM	BIT	1	%M00382	Mains ATS Failed to Close Alarm		Global			
GEN_ATS_OPN_ALM	BIT	1	%M00383	Generator ATS Failed to Open Alarm		Global			
GEN_ATS_CLS_ALM	BIT	1	%M00384	Generator ATS Failed to Close Alarm		Global			
NEW_ALM	BIT	1	%M00400	New Alarm		Global	R		
%M00401	BIT	1	%M00401	**No Description**		Global	R		

Program: BCC_4000_4 A: GLOBAL VARIABI

Name	Type	Len	Address	Description	Stored Val	Scope	Ret	Ovr	E
%M00402	BIT	1	%M00402	**No Description**		Global	R		
%M00403	BIT	1	%M00403	**No Description**		Global	R		
%M00404	BIT	1	%M00404	**No Description**		Global	R		
%M00405	BIT	1	%M00405	**No Description**		Global	R		
%M00406	BIT	1	%M00406	**No Description**		Global	R		
[illegible]00421	BIT	1	%M00421	**No Description**		Global	R		
00422	BIT	1	%M00422	**No Description**		Global	R		
%M00423	BIT	1	%M00423	**No Description**		Global	R		
%M00424	BIT	1	%M00424	**No Description**		Global	R		
%M00425	BIT	1	%M00425	**No Description**		Global	R		
%M00441	BIT	1	%M00441	**No Description**		Global	R		
%M00442	BIT	1	%M00442	**No Description**		Global	R		
%M00461	BIT	1	%M00461	**No Description**		Global	R		
%M00462	BIT	1	%M00462	**No Description**		Global	R		
%M00463	BIT	1	%M00463	**No Description**		Global	R		
%M00464	BIT	1	%M00464	**No Description**		Global	R		
%M00465	BIT	1	%M00465	**No Description**		Global	R		
%M00466	BIT	1	%M00466	**No Description**		Global	R		
%M00481	BIT	1	%M00481	**No Description**		Global	R		
%M00482	BIT	1	%M00482	**No Description**		Global	R		
%M00483	BIT	1	%M00483	**No Description**		Global	R		
%M00484	BIT	1	%M00484	**No Description**		Global	R		
AUTO_IND	BIT	1	%Q00001	Controls in Auto Indicator		Global			
TEST_IND	BIT	1	%Q00002	Controls in Test Indicator		Global			
MAN_IND	BIT	1	%Q00003	Controls in Manual Indicator		Global			
REM_STR_IND	BIT	1	%Q00004	Remote Start Indicator		Global			
MAINS_AVAIL_IND	BIT	1	%Q00005	Mains Available Indicator		Global			
MAINS_CON_IND	BIT	1	%Q00006	Mains Connected Indicator		Global			
(_RUN_IND	BIT	1	%Q00007	Generator Running Indicator		Global			
(_CON_IND	BIT	1	%Q00008	Generator Connected Indicated		Global			
MAINS_FAILED_IND	BIT	1	%Q00009	Mains Failed Indicator		Global			
EM_STOP_IND	BIT	1	%Q00010	Emergency Stop Indicator		Global			
MEN_FLT_IND	BIT	1	%Q00011	MEN Fault Indicator		Global			
OIL_P_LOW_SD_IND	BIT	1	%Q00012	Low Oil Pressure Shutdown Indicator		Global			
OIL_P_LOW_W_IND	BIT	1	%Q00013	Low Oil Pressure Warning Indicator		Global			
ENG_T_HI_SD_IND	BIT	1	%Q00014	High Engine Temperature Shutdown Indicator		Global			
ENG_T_HI_W_IND	BIT	1	%Q00015	High Engine Temperature Warning Indicator		Global			
RAD_WATER_LOW_IND	BIT	1	%Q00016	Low Radiator Water Level Indicator		Global			
FUEL_LEV_EMPTY_IND	BIT	1	%Q00017	Fuel Empty Indicator		Global			
FUEL_LEV_LOW_IND	BIT	1	%Q00018	Low Fuel Level Indicator		Global			
SPD_OVER_IND	BIT	1	%Q00019	Over Speed Indicator		Global			
SPD_UNDER_IND	BIT	1	%Q00020	Under Speed Indicator		Global			
FAIL_TO_STR_IND	BIT	1	%Q00021	Fail to Start Indicator		Global			
VOLTS_UNDER_IND	BIT	1	%Q00022	Alternator Voltage Under Indicator		Global			
V S_OVER_IND	BIT	1	%Q00023	Alternator Voltage Over Indicator		Global			
ALT_TEMP_IND	BIT	1	%Q00024	Alternator High Temperature Indicator		Global			
GEN_CB_TRIP_IND	BIT	1	%Q00025	Generator CB Tripped Indicator		Global			
BAT_CHG_AC_IND	BIT	1	%Q00026	Battery Charger AC Indicator		Global			
BAT_CONT_LOW_V_IND	BIT	1	%Q00027	Control Battery Charger Low Voltage Indicator		Global			
BAT_STR_LOW_V_IND	BIT	1	%Q00028	Start Battery Charger Low Voltage Indicator		Global			
CAN_DOORS_OPEN_IND	BIT	1	%Q00029	Canopy Doors Open Indicator		Global			
MAINS_ATS_OPN_CMD	BIT	1	%Q00033	BCC Mains ATS Open Command		Global			
GEN_ATS_CLS_CMD	BIT	1	%Q00034	BCC Generator ATS Close Command		Global			
GEN_SD_ALM	BIT	1	%Q00035	BCC Generator Shutdown Alarm		Global			
GEN_W_ALM	BIT	1	%Q00036	BCC Generator Warning Alarm		Global			

Program: BCC_4000_4 A: GLOBAL VARIABI

Name	Type	Len	Address	Description	Stored Val	Scope	Ret	Ovr	E
FUEL_LOW	BIT	1	%Q00037	BCC Low Fuel		Global			
GEN_RUN	BIT	1	%Q00038	BCC Generator Running		Global			
GEN_CON	BIT	1	%Q00039	BCC Generator Connected		Global			
SMR	BIT	1	%Q00040	Starter Motor Relay		Global			
GCR	BIT	1	%Q00041	Governor Control Relay		Global			
[illegible]R	BIT	1	%Q00042	Audible Alarm Relay		Global			
[illegible]AR	BIT	1	%Q00043	Generator Shunt Trip Relay		Global			
DOORS_OPEN	BIT	1	%Q00044	BCC Doors Open Alarm		Global			
GEN_AUTO	BIT	1	%Q00045	Generator Auto Mode		Global			
SEQ_CNT	WORD	1	%R00001	Sequence Counter		Global	R		
MODBUS_INPUTS	WORD	1	%R00002	Modbus Digital Inputs		Global	R		
MODBUS_OUTPUTS	WORD	1	%R00005	Modbus Digital Outputs		Global	R		
MODBUS_STATUS_1	WORD	1	%R00008	Modbus Status 1		Global	R		
MODBUS_STATUS_2	WORD	1	%R00009	Modbus Status 2		Global	R		
MODBUS_ALARMS	WORD	1	%R00010	Modbus Alarms		Global	R		
%R00100	WORD	3	%R00100	**No Description**		Global	R		
%R00103	WORD	3	%R00103	**No Description**		Global	R		
%R00106	WORD	3	%R00106	**No Description**		Global	R		
%R00109	WORD	3	%R00109	**No Description**		Global	R		
%R00112	WORD	3	%R00112	**No Description**		Global	R		
%R00115	WORD	3	%R00115	**No Description**		Global	R		
%R00118	WORD	3	%R00118	**No Description**		Global	R		
%R00121	WORD	3	%R00121	**No Description**		Global	R		
%R00124	WORD	3	%R00124	**No Description**		Global	R		
%R00127	WORD	3	%R00127	**No Description**		Global	R		
%R00130	WORD	3	%R00130	**No Description**		Global	R		
%R00133	WORD	3	%R00133	**No Description**		Global	R		
%R00136	WORD	3	%R00136	**No Description**		Global	R		
[illegible]0139	WORD	3	%R00139	**No Description**		Global	R		
[illegible]0200	WORD	3	%R00200	**No Description**		Global	R		
%R00203	WORD	3	%R00203	**No Description**		Global	R		
%R00206	WORD	3	%R00206	**No Description**		Global	R		
%R00209	WORD	3	%R00209	**No Description**		Global	R		
%R00212	WORD	3	%R00212	**No Description**		Global	R		
%R00215	WORD	3	%R00215	**No Description**		Global	R		
%R00218	WORD	3	%R00218	**No Description**		Global	R		
%R00221	WORD	3	%R00221	**No Description**		Global	R		
%R00224	WORD	3	%R00224	**No Description**		Global	R		
%R00227	WORD	3	%R00227	**No Description**		Global	R		
%R00230	WORD	3	%R00230	**No Description**		Global	R		
%R00300	WORD	3	%R00300	**No Description**		Global	R		
%R00303	WORD	3	%R00303	**No Description**		Global	R		
%R00306	WORD	3	%R00306	**No Description**		Global	R		
%R00309	WORD	3	%R00309	**No Description**		Global	R		
%R00312	WORD	3	%R00312	**No Description**		Global	R		
%R00315	WORD	3	%R00315	**No Description**		Global	R		
%R00318	WORD	3	%R00318	**No Description**		Global	R		
%R00321	WORD	3	%R00321	**No Description**		Global	R		
%R00324	WORD	3	%R00324	**No Description**		Global	R		
%R00327	WORD	3	%R00327	**No Description**		Global	R		
%R00330	WORD	3	%R00330	**No Description**		Global	R		
%[illegible]0333	WORD	3	%R00333	**No Description**		Global	R		
%[illegible]0336	WORD	3	%R00336	**No Description**		Global	R		
%R00339	WORD	3	%R00339	**No Description**		Global	R		
FST_SCN	BIT	1	%S00001	Set to 1 when the current sweep is the first sweep		Global	R		
LST_SCAN	BIT	1	%S00002	Reset from 1 to 0 when the current sweep is the last sweep		Global	R		
T_10MS	BIT	1	%S00003	0.01 Second Timer Contact		Global	R		
T_100MS	BIT	1	%S00004	0.1 Second Timer Contact		Global	R		
T_1S	BIT	1	%S00005	1 Second Timer Contact		Global	R		
T_1M	BIT	1	%S00006	1 Minute Timer Contact		Global	R		
ALW_ON	BIT	1	%S00007	Always ON		Global	R		
ALW_OFF	BIT	1	%S00008	Always OFF		Global	R		
PLC_BAT	BIT	1	%S00014	Set to indicate a bad battery in the CPU		Global	R		
%R00400	WORD	1	%R00400	**No Description**		Global	R		

Program: BCC_4000_4 A: GLOBAL VARIABL

Name	Type	Len	Address	Description	Stored Val	Scope	Ret	Ovr	E
FST_SCN	BIT	1	%S00001	Set to 1 when the current sweep is the first sweep		System	R		
LST_SCN	BIT	1	%S00002	Reset from 1 to 0 when the current sweep is the last sweep		System	R		
T_10MS	BIT	1	%S00003	0.01 second timer contact		System	R		
T_100MS	BIT	1	%S00004	0.1 second timer contact		System	R		
T_SEC	BIT	1	%S00005	1.0 second timer contact		System	R		
T_MIN	BIT	1	%S00006	1.0 minute timer contact		System	R		
ALW_ON	BIT	1	%S00007	Always ON		System	R		
ALW_OFF	BIT	1	%S00008	Always OFF		System	R		
SY_FULL	BIT	1	%S00009	Set when the PLC fault table fills up		System	R		
IO_FULL	BIT	1	%S00010	Set when the I/O fault table fills up		System	R		
OVR_PRE	BIT	1	%S00011	Set when an override exists in %I, %Q, %M or %G memory		System	R		
PRG_CHK	BIT	1	%S00013	Set when background program check is active		System	R		
PLC_BAT	BIT	1	%S00014	Set to indicate a bad battery in a Release 4 or later CPU		System	R		
SNPXACT	BIT	1	%S00017	SNP-X host is actively attached to the CPU		System	R		
SNPX_RD	BIT	1	%S00018	SNP-X host has read data from the CPU		System	R		
SNPX_WT	BIT	1	%S00019	SNP-X host has written data to the CPU		System	R		
R_N_OK	BIT	1	%S00020	Set ON when a relational function using REAL data is success		System	R		
CONTCON	BIT	1	%S00032	Reserved for use by the programming software for cont contact		System	R		
PB_SUM	BIT	1	%SA0001	Set when PLC checksum does not match app checksum		System	R		
OV_SWP	BIT	1	%SA0002	Set when PLC sweep time is longer than user specified sweep time		System	R		
APL_FLT	BIT	1	%SA0003	Set when an application fault occurs		System	R		
CFG_MM	BIT	1	%SA0009	Set when a config mismatch is detected during system powerup		System	R		
HRD_CPU	BIT	1	%SA0010	Set when the diagnostics detects a problem with the CPU hardware		System	R		
LOW_BAT	BIT	1	%SA0011	Set when a low battery fault occurs		System	R		
LOS_RCK	BIT	1	%SA0012	Set when an expansion rack stops communicating with the CPU		System	R		
LOS_IOM	BIT	1	%SA0014	Set when an I/O module stops communicating with the PLC CPU		System	R		
LOS_SIO	BIT	1	%SA0015	Set when an option module stops communicating with the PLC CPU		System	R		
ADD_RCK	BIT	1	%SA0017	Set when an expansion rack is added to the system		System	R		
ADD_IOM	BIT	1	%SA0019	Set when an I/O module is added to a rack		System	R		
ADD_SIO	BIT	1	%SA0020	Set when an option module is added to a rack		System	R		
HRD_SIO	BIT	1	%SA0027	Set when a hardware failure is detected in an option module		System	R		
SFT_SIO	BIT	1	%SA0031	Set when an unrecoverable fault is detected in an option module		System	R		
BAD_RAM	BIT	1	%SB0010	Set when the CPU detects		System	R		

Name	Type	Len	Address	Description	Stored Val	Scope	Ret	Ovr	E
				corrupted RAM memory at powerup					
BAD_PWD	BIT	1	%SB0011	Set when a password violation occurs		System	R		
SFT_CPU	BIT	1	%SB0013	Set when the CPU detects an unrecoverable error in the software		System	R		
STOR_ER	BIT	1	%SB0014	Set when an error occurs during a programmer store operation		System	R		
ANY_FLT	BIT	1	%SC0009	Set when any fault occurs		System	R		
SY_FLT	BIT	1	%SC0010	Set when fault occurs where an entry is put in the PLC fault tbl		System	R		
IO_FLT	BIT	1	%SC0011	Set when fault occurs where an entry is put in the I/O fault tbl		System	R		
SY_PRES	BIT	1	%SC0012	Set as long as there is at least one entry in the PLC fault tbl		System	R		
IO_PRES	BIT	1	%SC0013	Set as long as there is at least one entry in the I/O fault tbl		System	R		
HRD_FLT	BIT	1	%SC0014	Set when a hardware fault occurs		System	R		
SFT_FLT	BIT	1	%SC0015	Set when a software fault occurs		System	R		

1 Written for EPAC.
Project: Brisbane City Council, Standby Generator Program.

2 FST_SCN PRESETS

%S00001
Set to 1 when the current sweep is the first sweep

3 SEQ

4 MAIN

5 ALARM

6 AUD_ALM

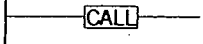

7 MODBUS

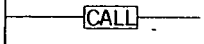

Γ um: BCC_4000_4 A: _M

1 Generator Sequence No.1
Generator Stopped

2
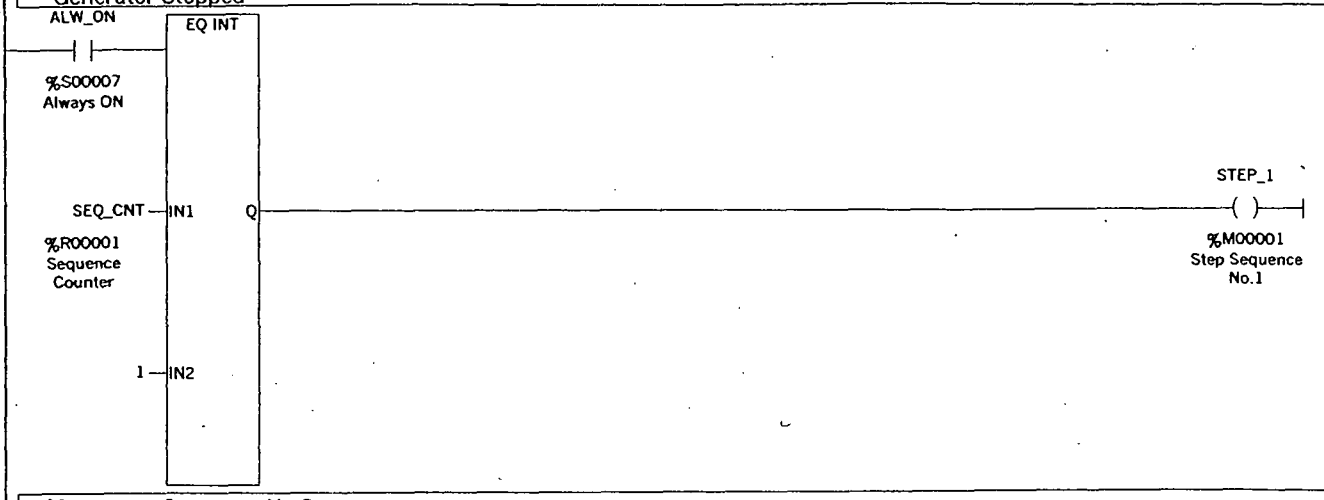

3 Generator Sequence No.2
Generator Starting

4
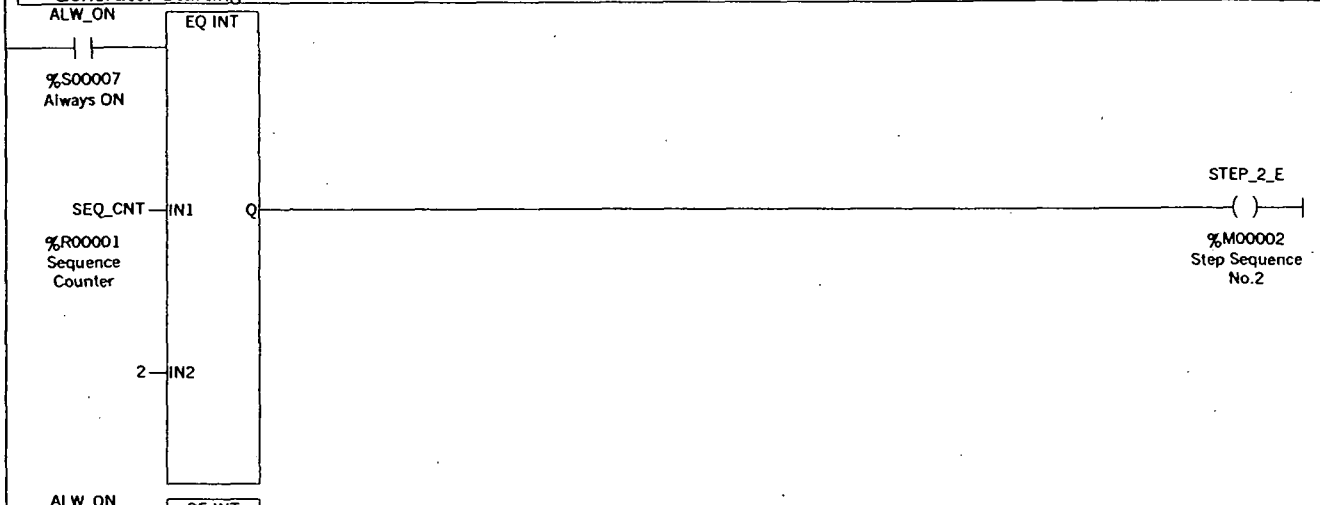

5
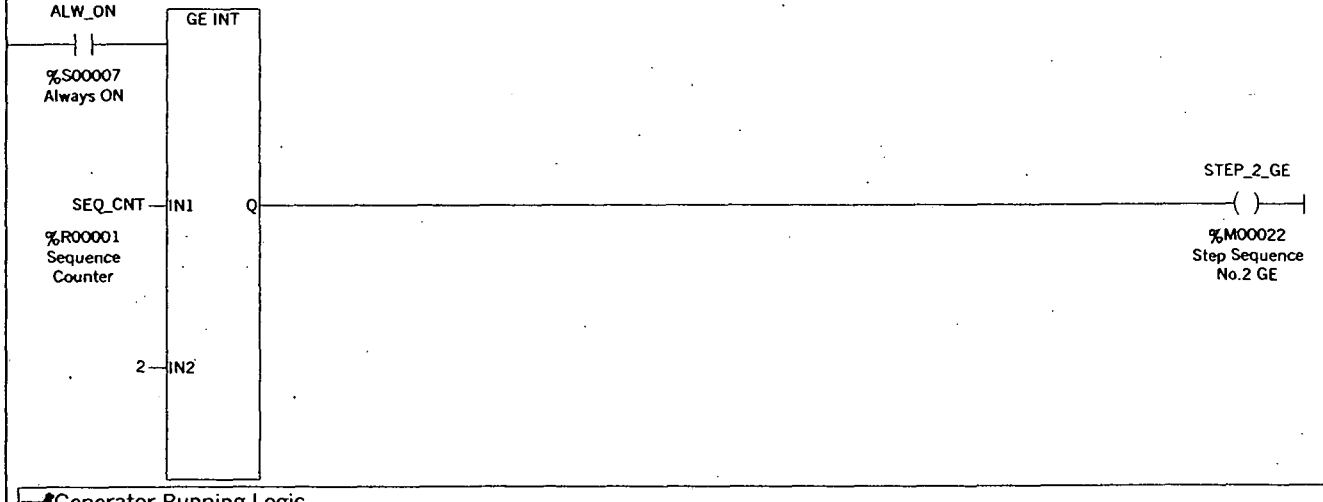

6 Generator Running Logic

7
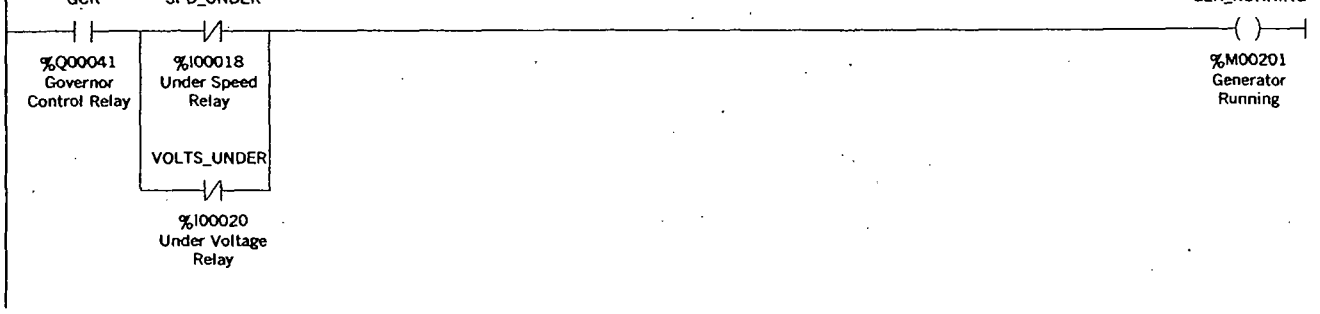

Γ um: BCC_4000_4 A: M

8 Generator Starter Motor and Governor Logic

9
STEP_2_E %M00002 Step Sequence No.2
SPD_STP_CRK %I00017 Crank Cutout Relay
FAIL_STR_TM %M00202 Failed to Start Time
CRK_CUTOUT %M00205 Generator Crank Cutout
SMR %Q00040 Starter Motor Relay

10
STEP_2_GE %M00022 Step Sequence No.2 GE
HIGH_HIGH_A... %M00300 High High Alarm
GCR %Q00041 Governor Control Relay

11 Generator Fail To Start Timers and Counters

12
STEP_2_E %M00002 Step Sequence No.2
SPD_STP_CRK %I00017 Crank Cutout Relay
FAIL_STR_DLY %M00203 Failed to Start Pulse Delay
TMR TENTHS %R00200 100 PV %R00200
FAIL_STR_TM %M00202 Failed to Start Time

13
FAIL_STR_TM %M00202 Failed to Start Time
TMR TENTHS %R00203 100 PV %R00203
FAIL_STR_DLY %M00203 Failed to Start Pulse Delay

14
FAIL_STR_TM %M00202 Failed to Start Time
UPCTR %R00206 3 PV
FAIL_STR_CNT %M00204 Failed to Start Counter
STEP_2_E %M00002 Step Sequence No.2 R %R00206

15
STEP_2_E %M00002 Step Sequence No.2
GCR %Q00041 Governor Control Relay
SPD_STP_CRK %I00017 Crank Cutout Relay
FAIL_STR_TM %M00202 Failed to Start Time
CRK_CUTOUT %M00205 Generator Crank Cutout
TMR TENTHS %R00209 10 PV %R00209
CRK_CUTOUT %M00205 Generator Crank Cutout

Program: BCC_4000_4 A: M

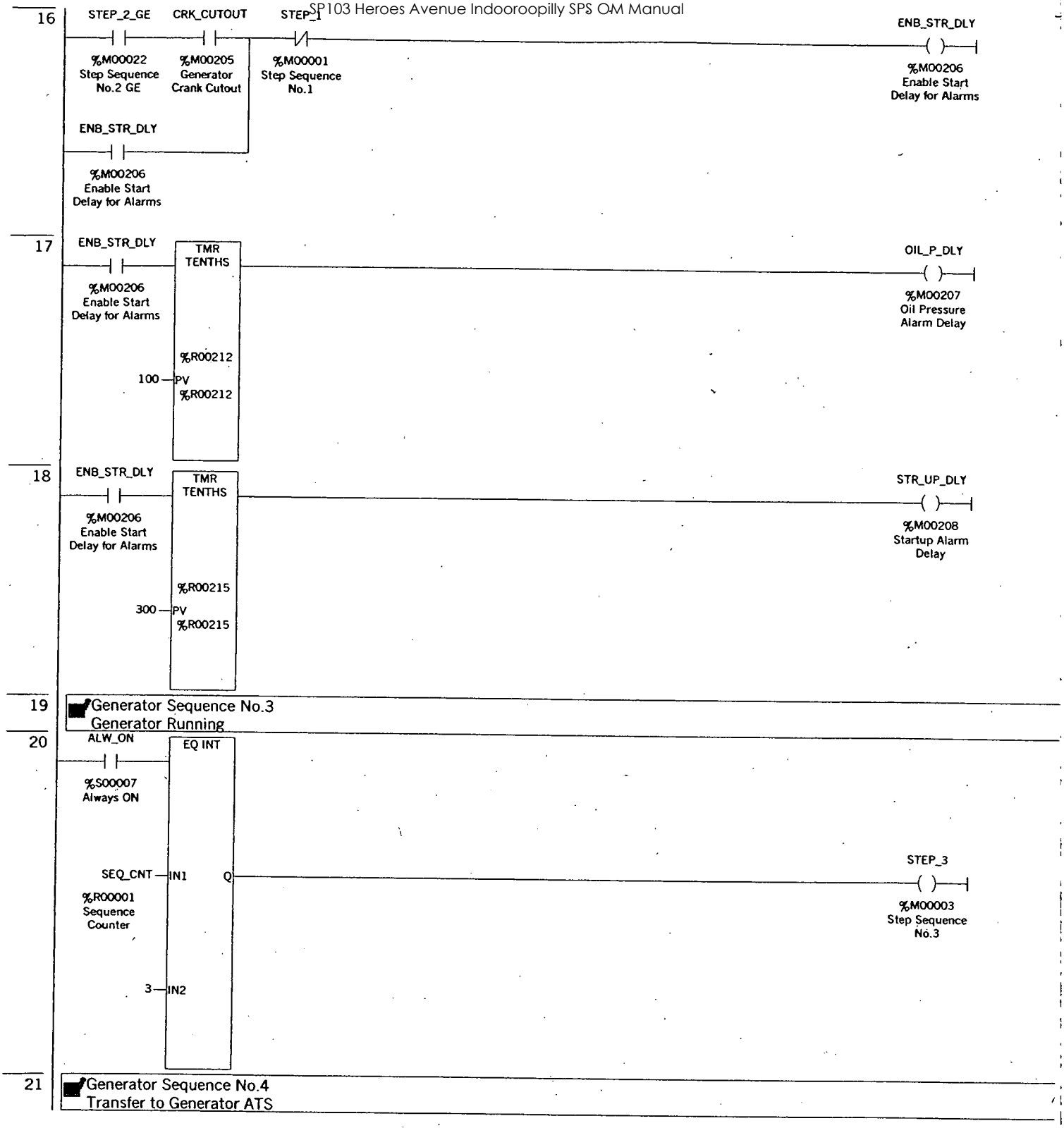

] am: BCC_4000_4 A: M/

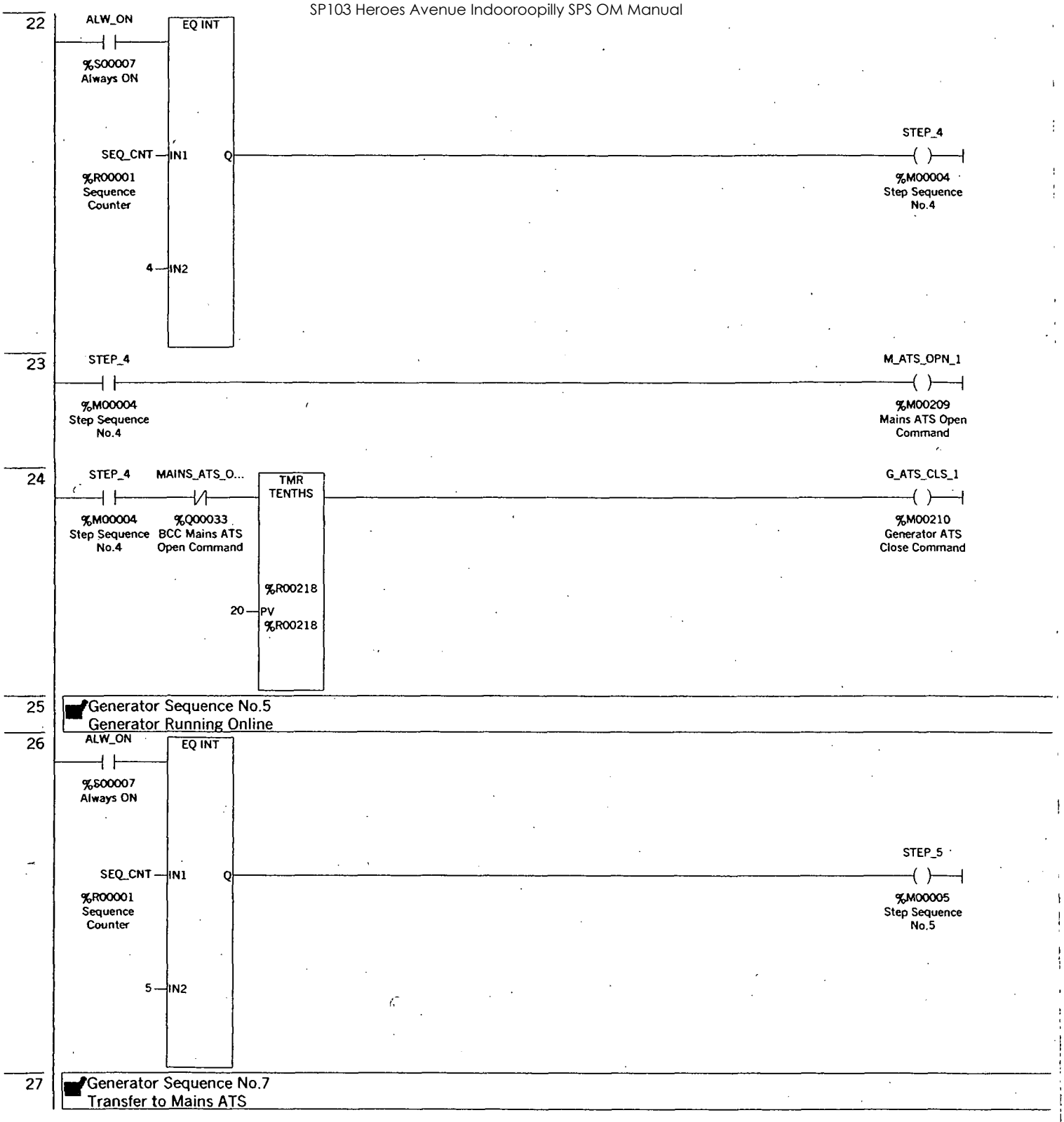

P m: BCC_4000_4 A: M/

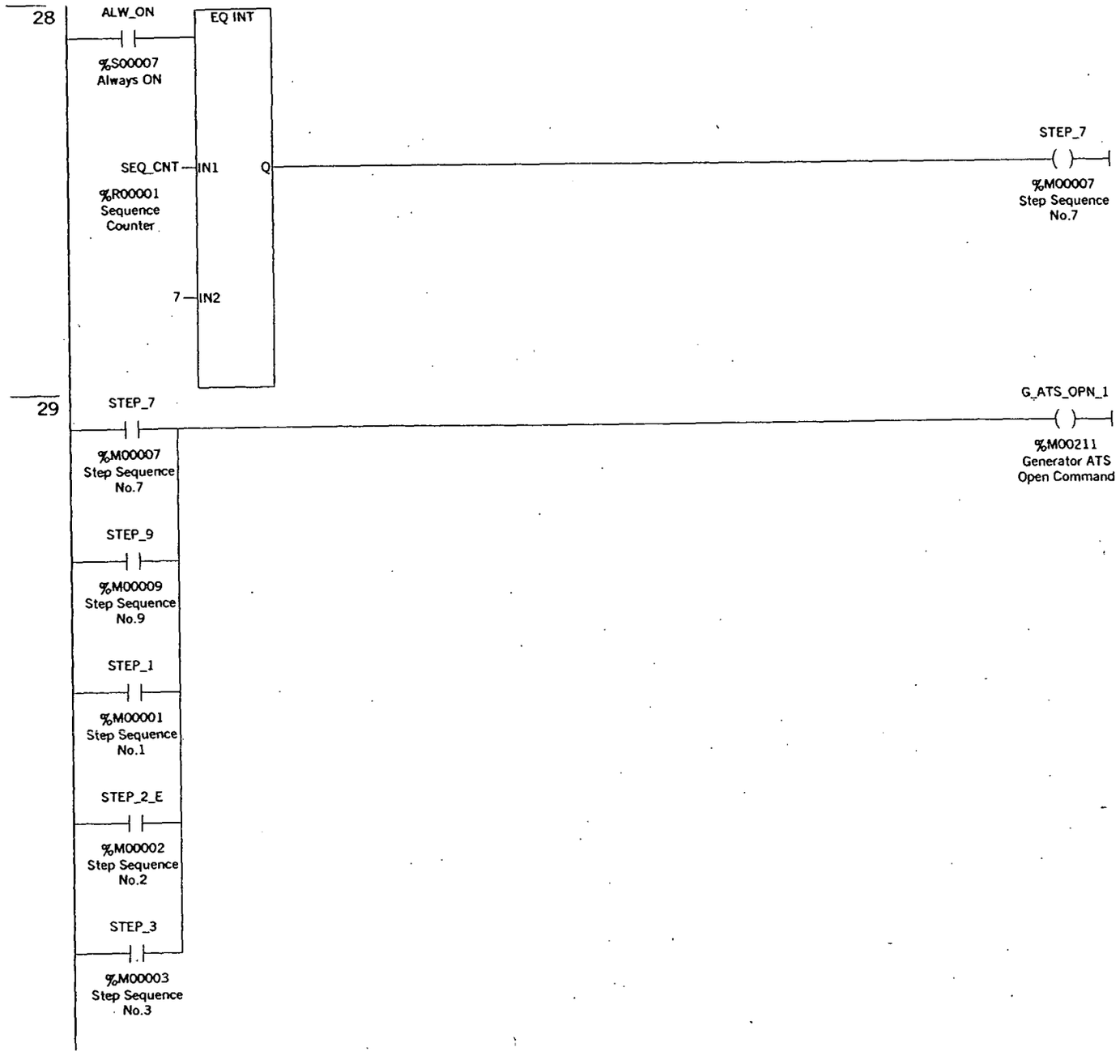
28
ALW_ON
%S00007
Always ON
EQ INT
SEQ_CNT
IN1
Q
%R00001
Sequence
Counter
7
IN2
STEP_7
%M00007
Step Sequence
No.7
29
STEP_7
%M00007
Step Sequence
No.7
G_ATS_OPN_1
%M00211
Generator ATS
Open Command
STEP_9
%M00009
Step Sequence
No.9
STEP_1
%M00001
Step Sequence
No.1
STEP_2_E
%M00002
Step Sequence
No.2
STEP_3
%M00003
Step Sequence
No.3

am: BCC_4000_4

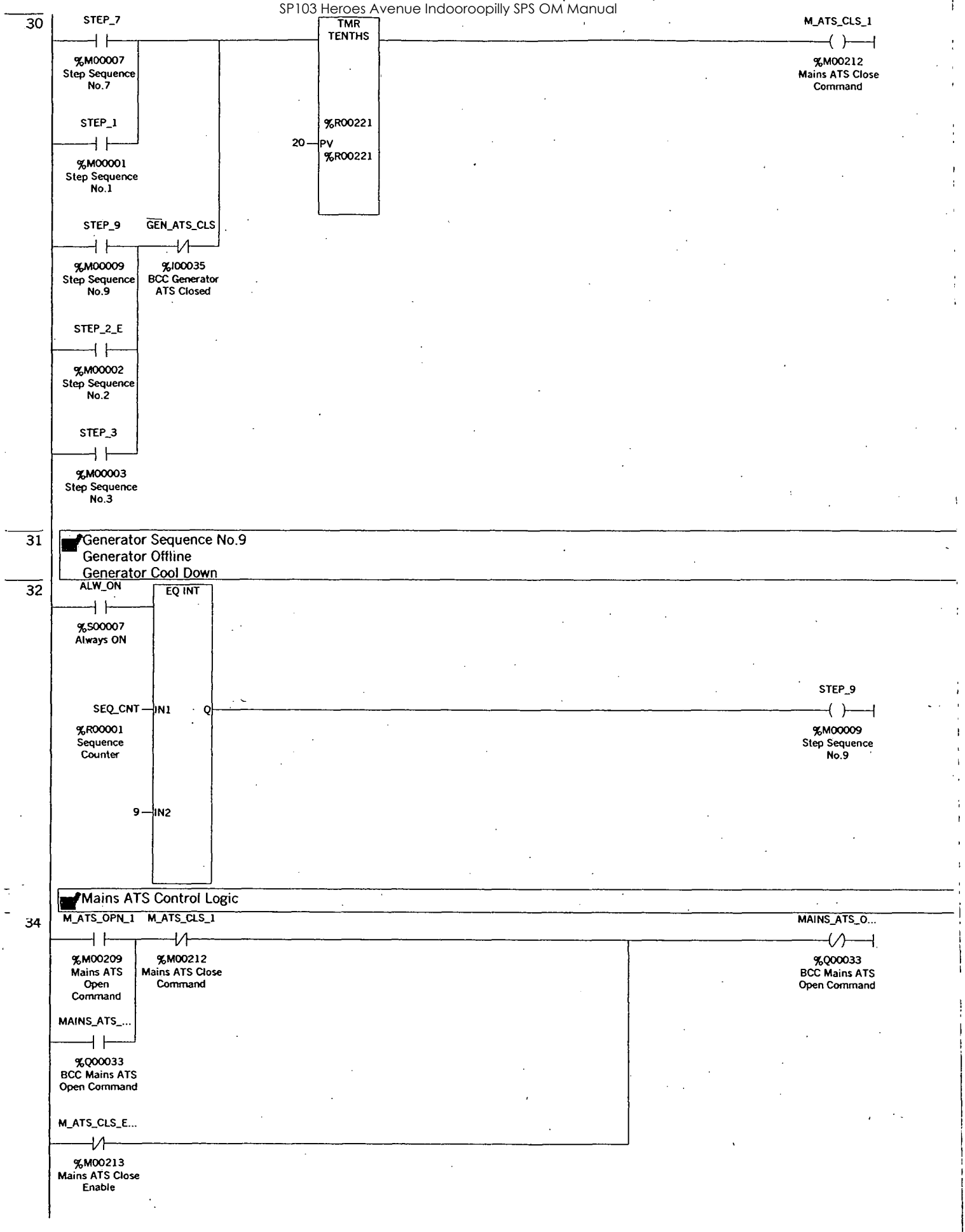

P m: BCC_4000_4 A: M

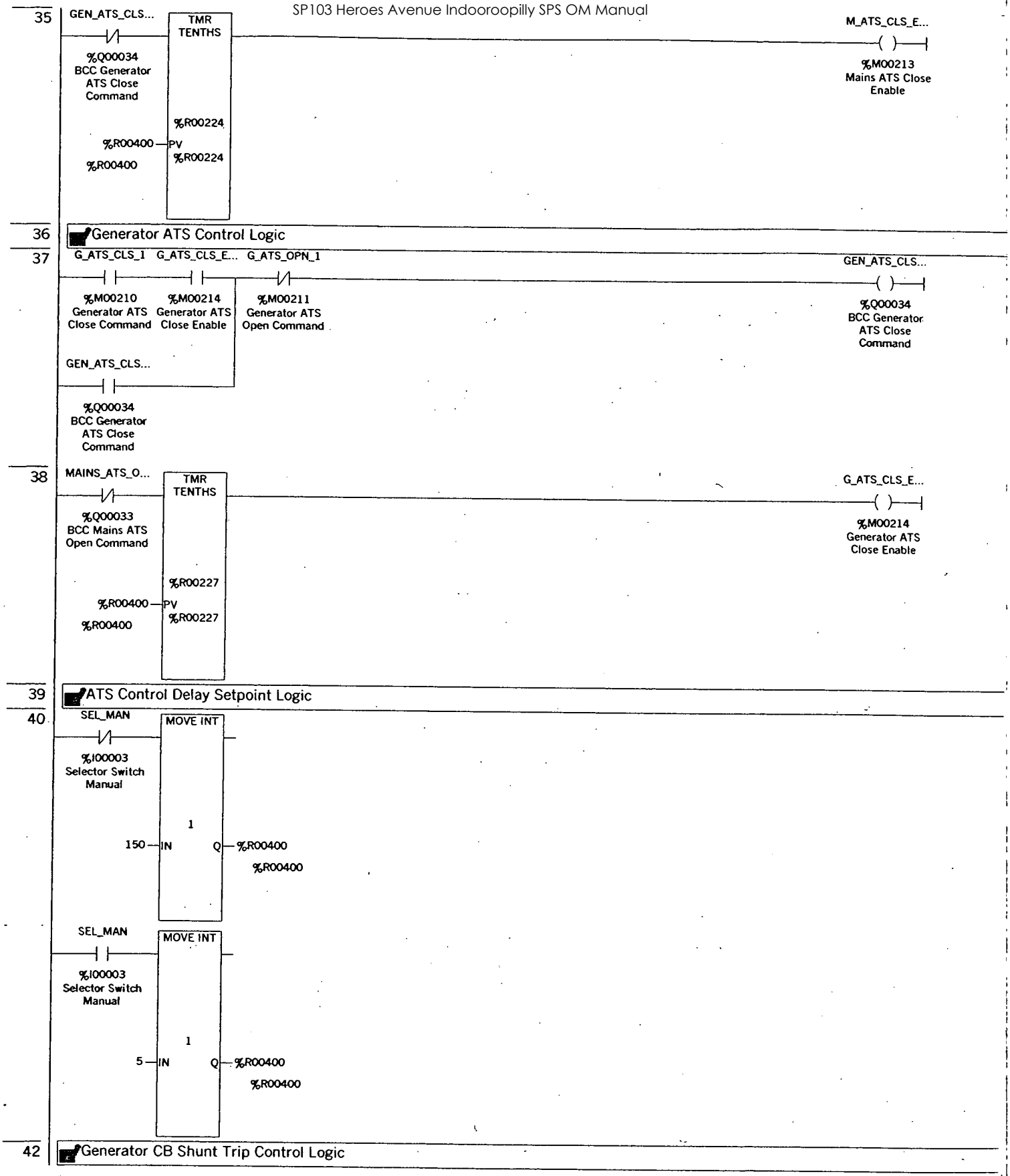

I um: BCC_4000_4 A: M

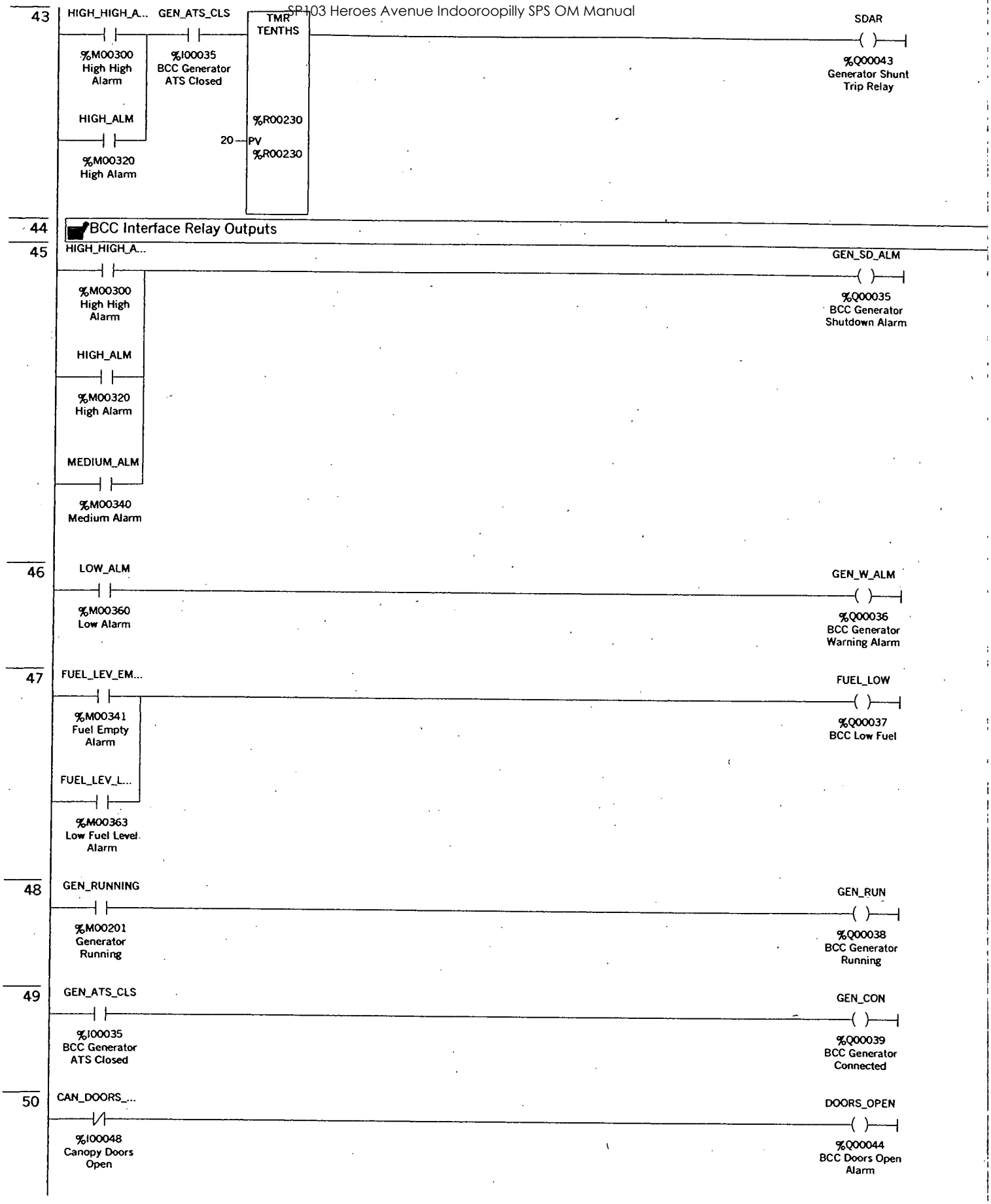

F m: BCC_4000_4 A: M

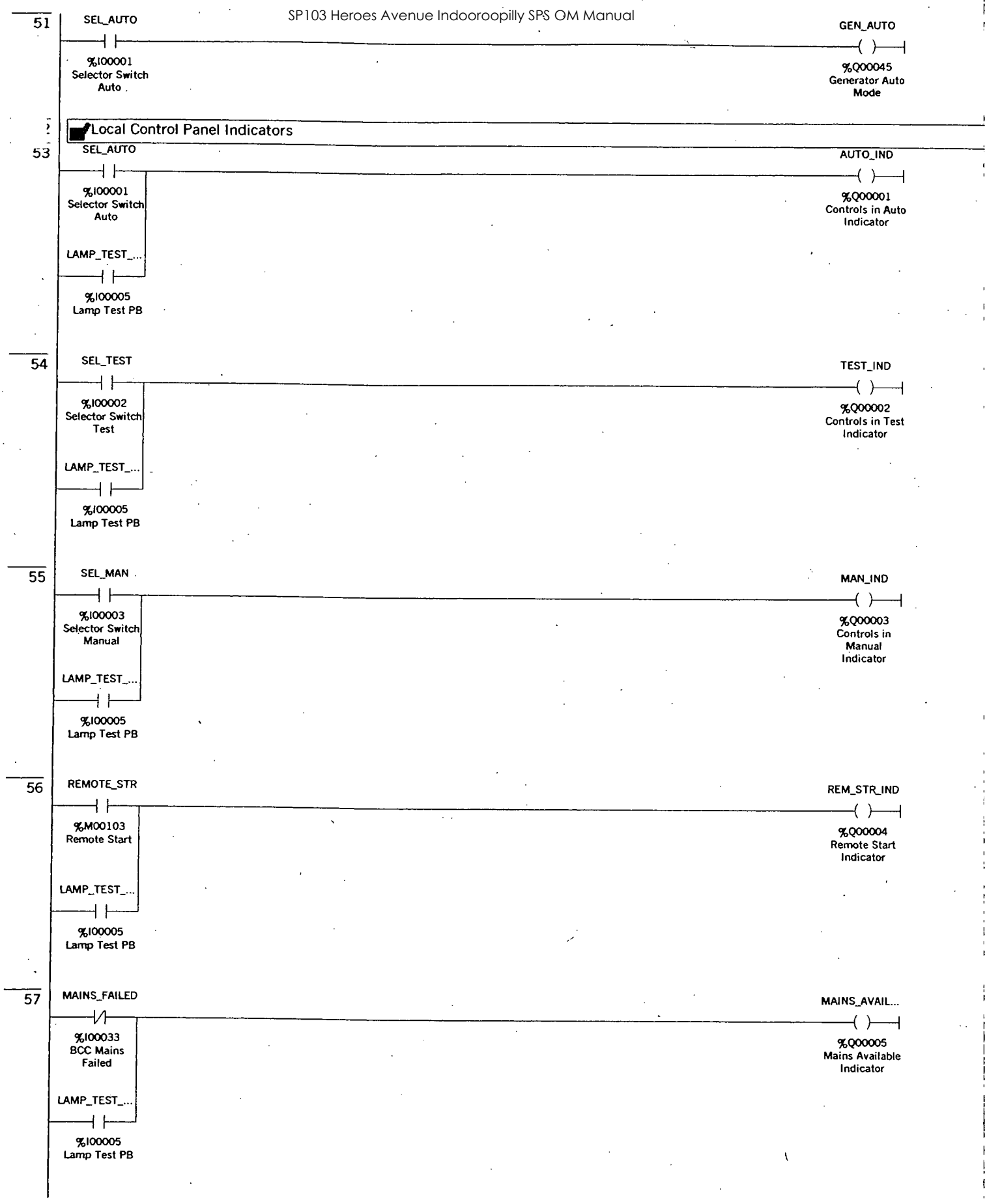

F m: BCC_4000_4 A: M

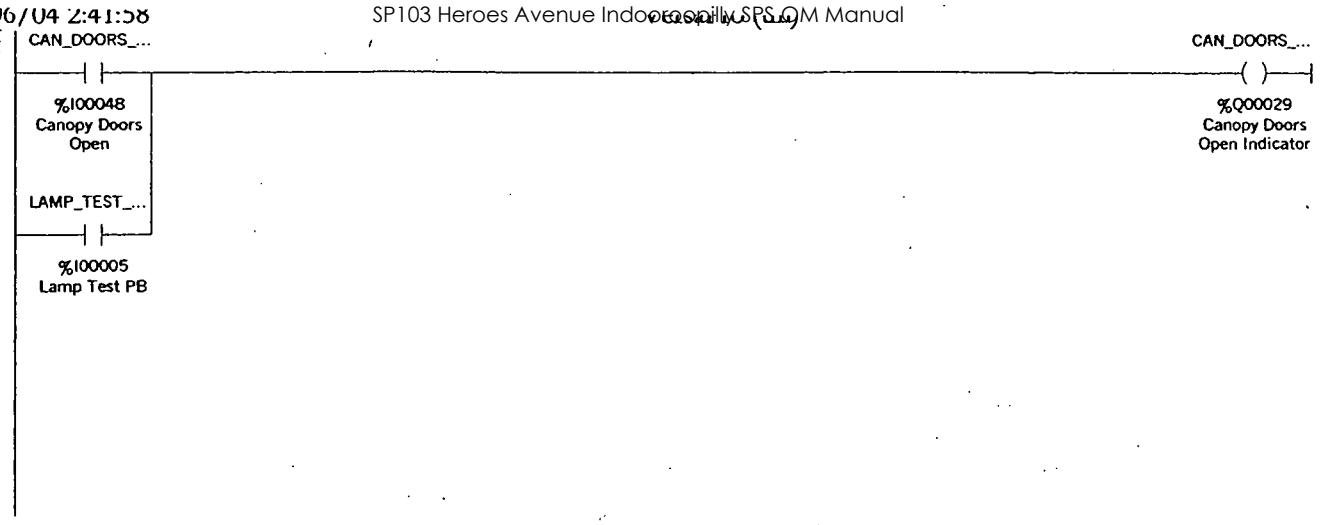

am: BCC_4000_4 A: M

1 Presets Routine
Move 1 to the Sequence Counter

2

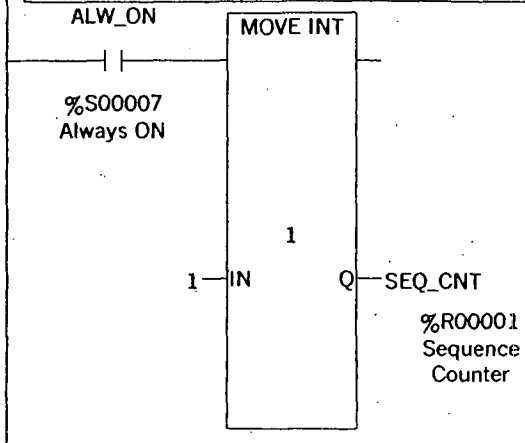

] arm: BCC_4000_4 A: PRESI

1 Generator Modbus RTU Slave Interface
40001 - Generator Sequence Number

2
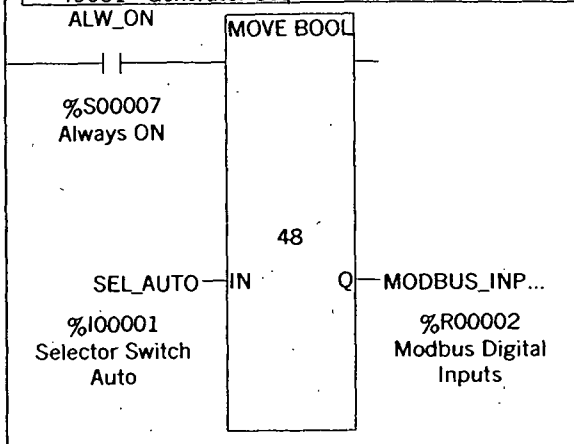

3
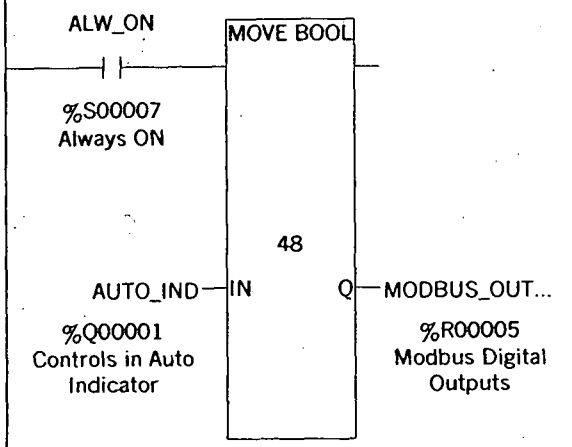

4
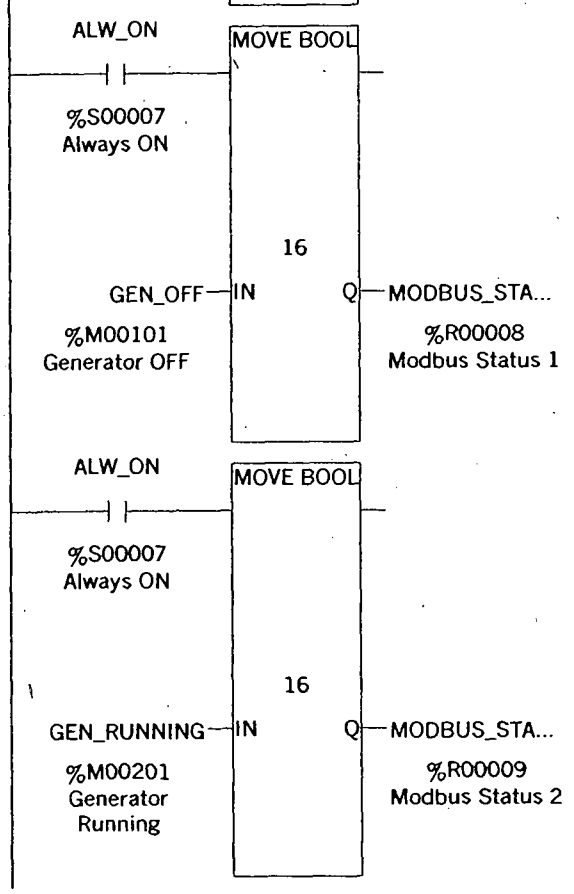

P m: BCC_4000_4 A: MODI

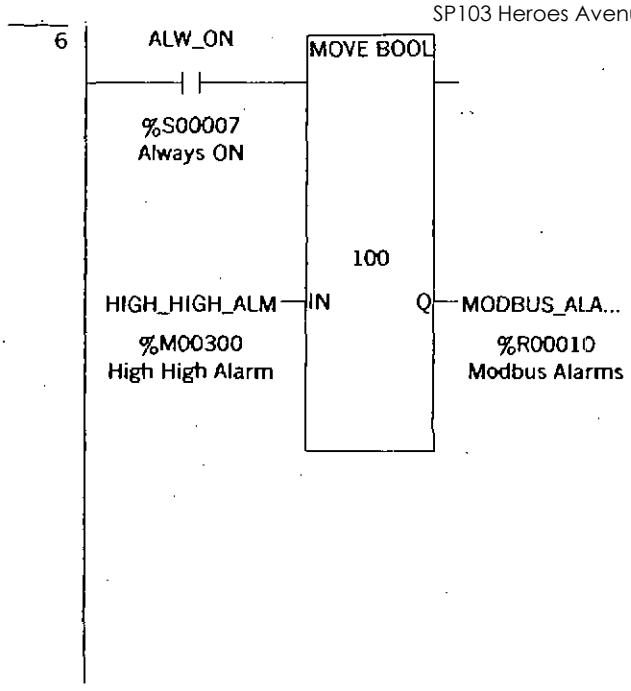

am: BCC_4000_4 A: MODI

1 Generator OFF State

2
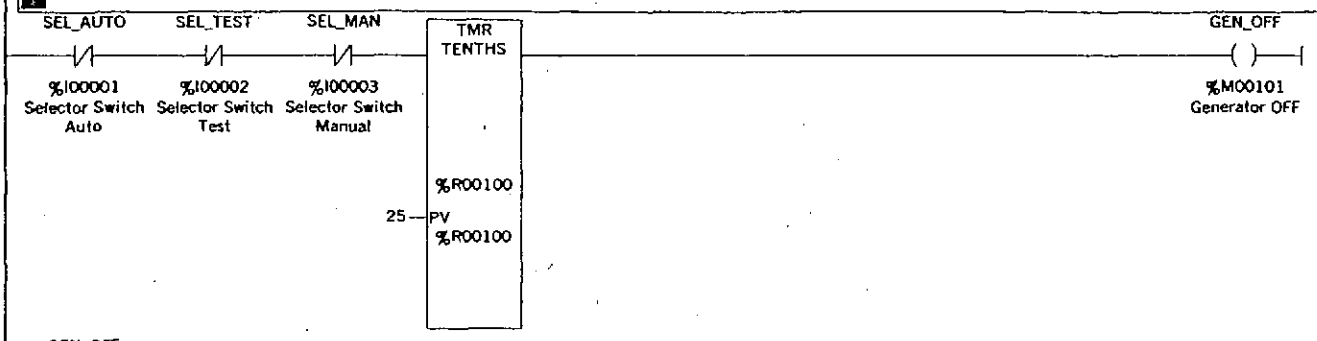

3
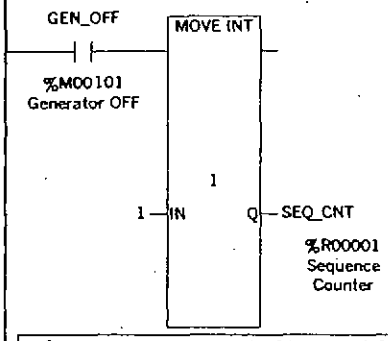

4 Generator Automatic Start and Stop Logic

5
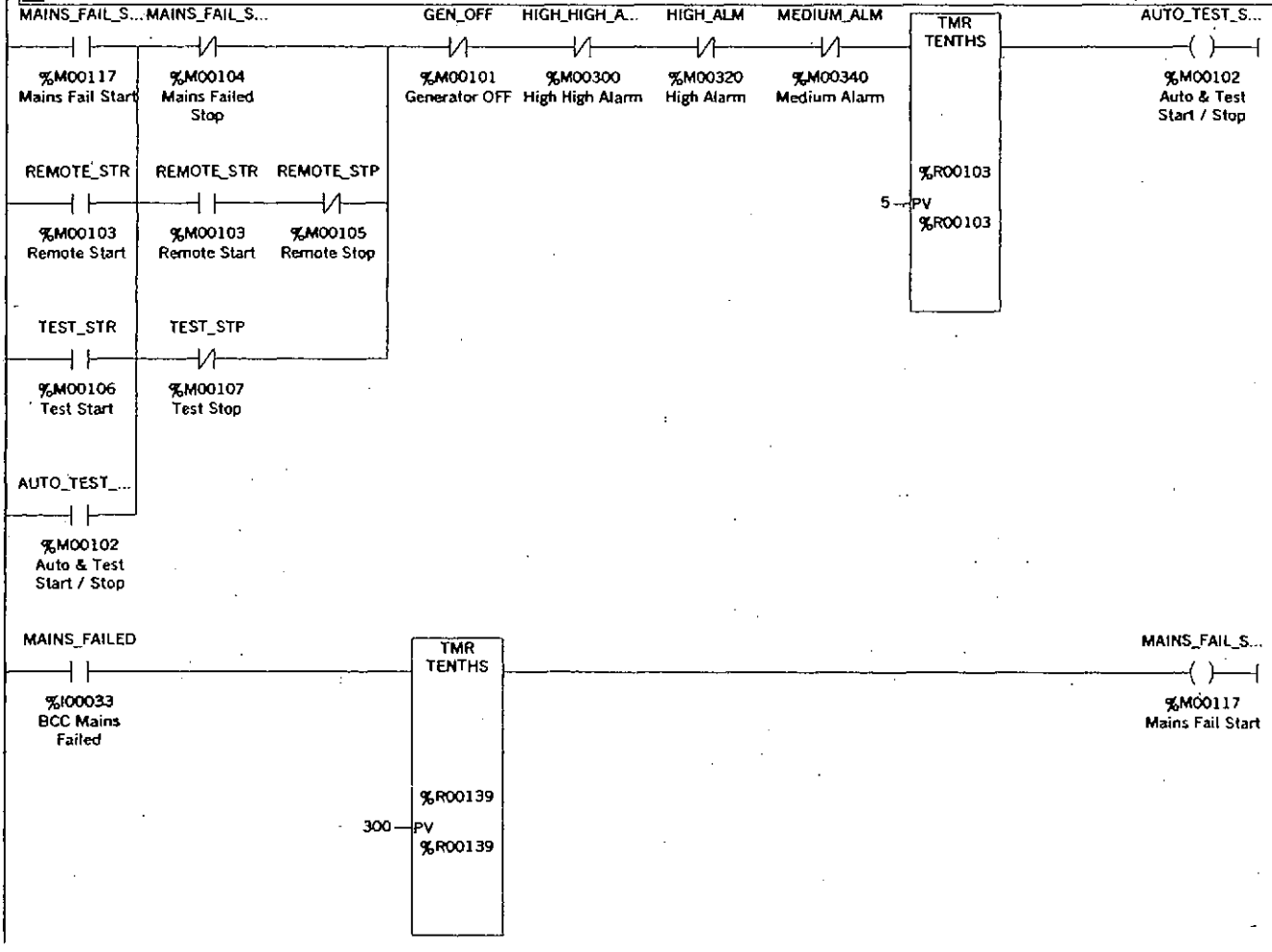

Program: BCC_4000_4 A:

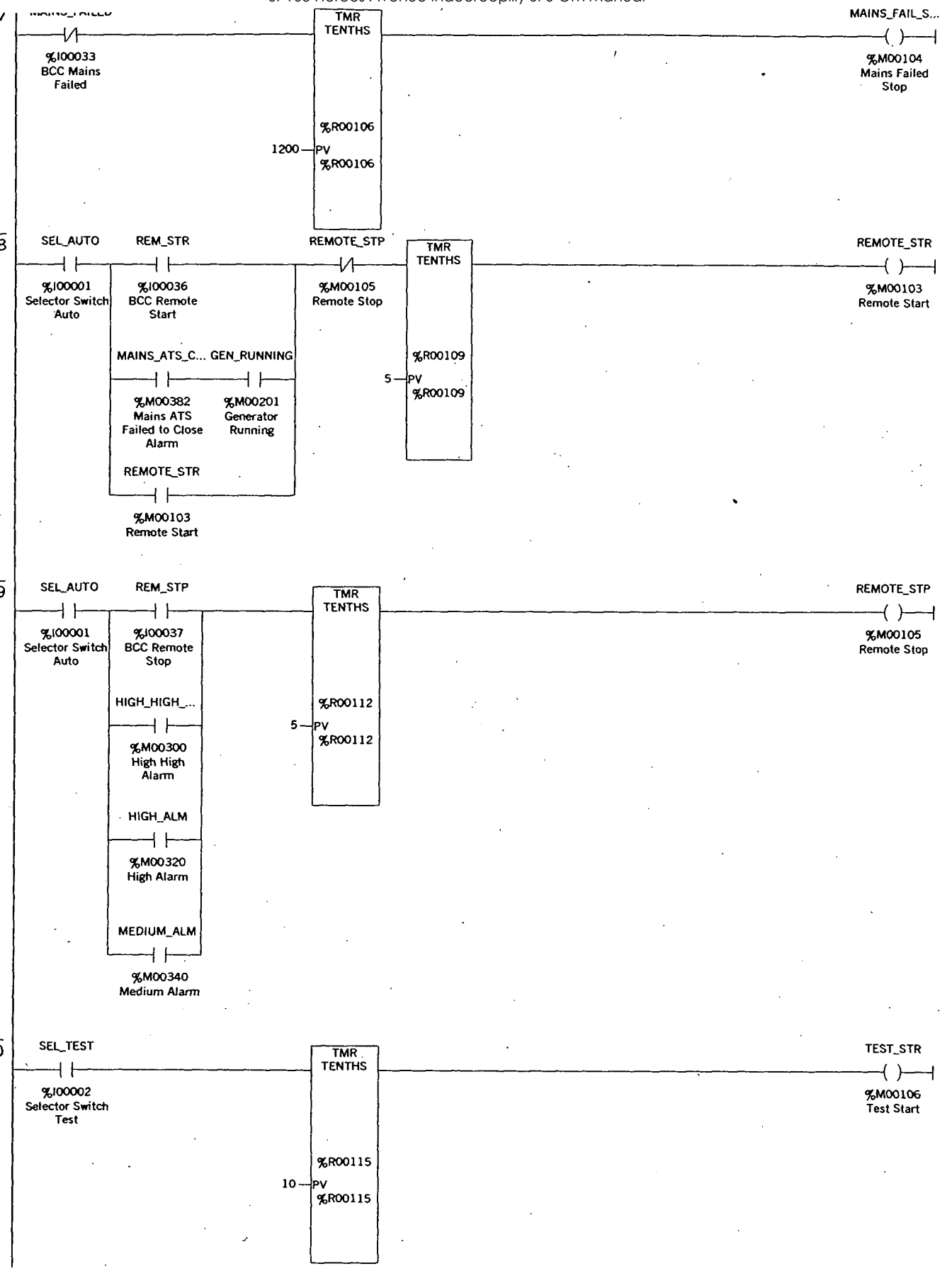

P1 n: BCC_4000_4 A: SI

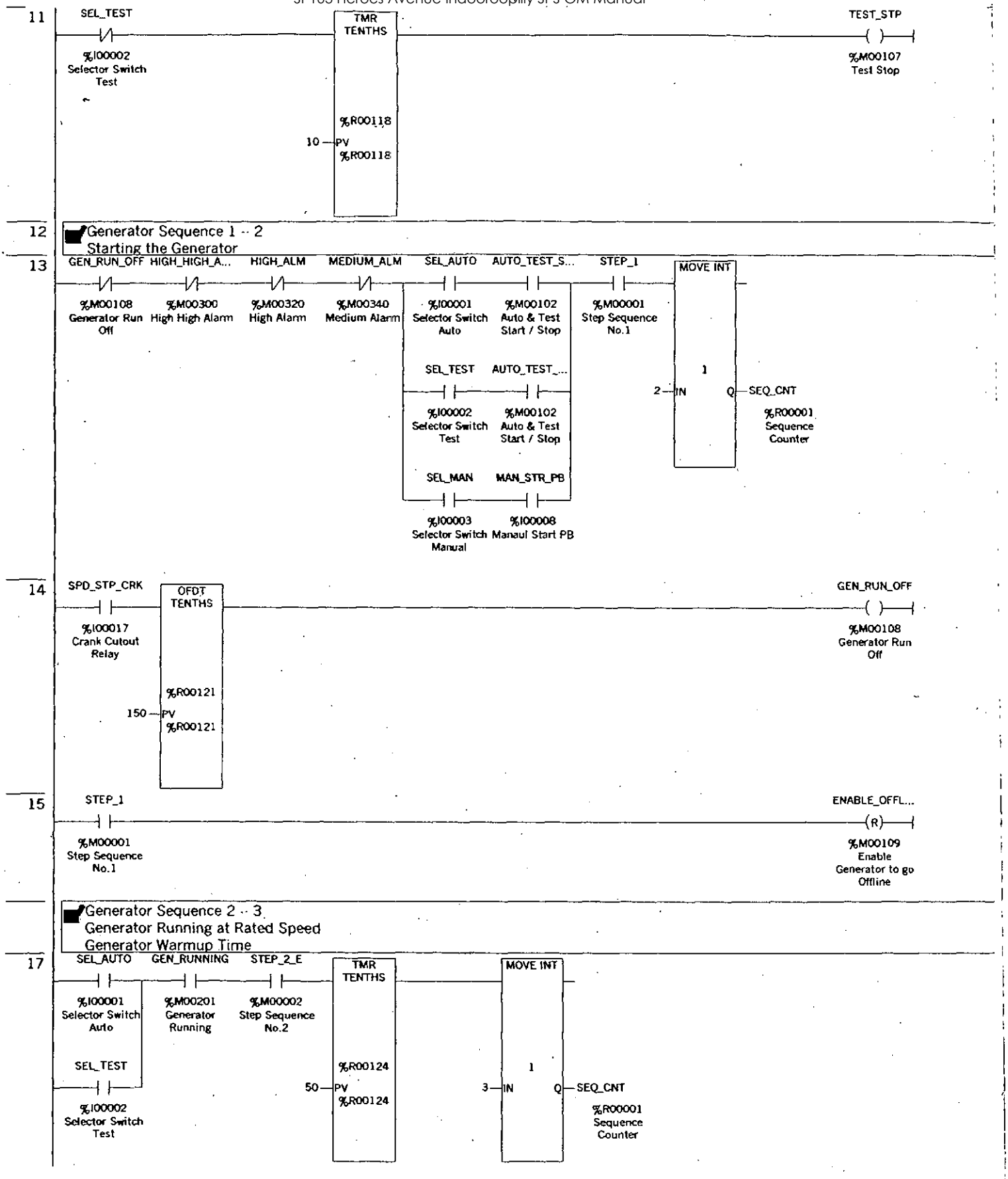

P1 n: BCC_4000_4 A: S

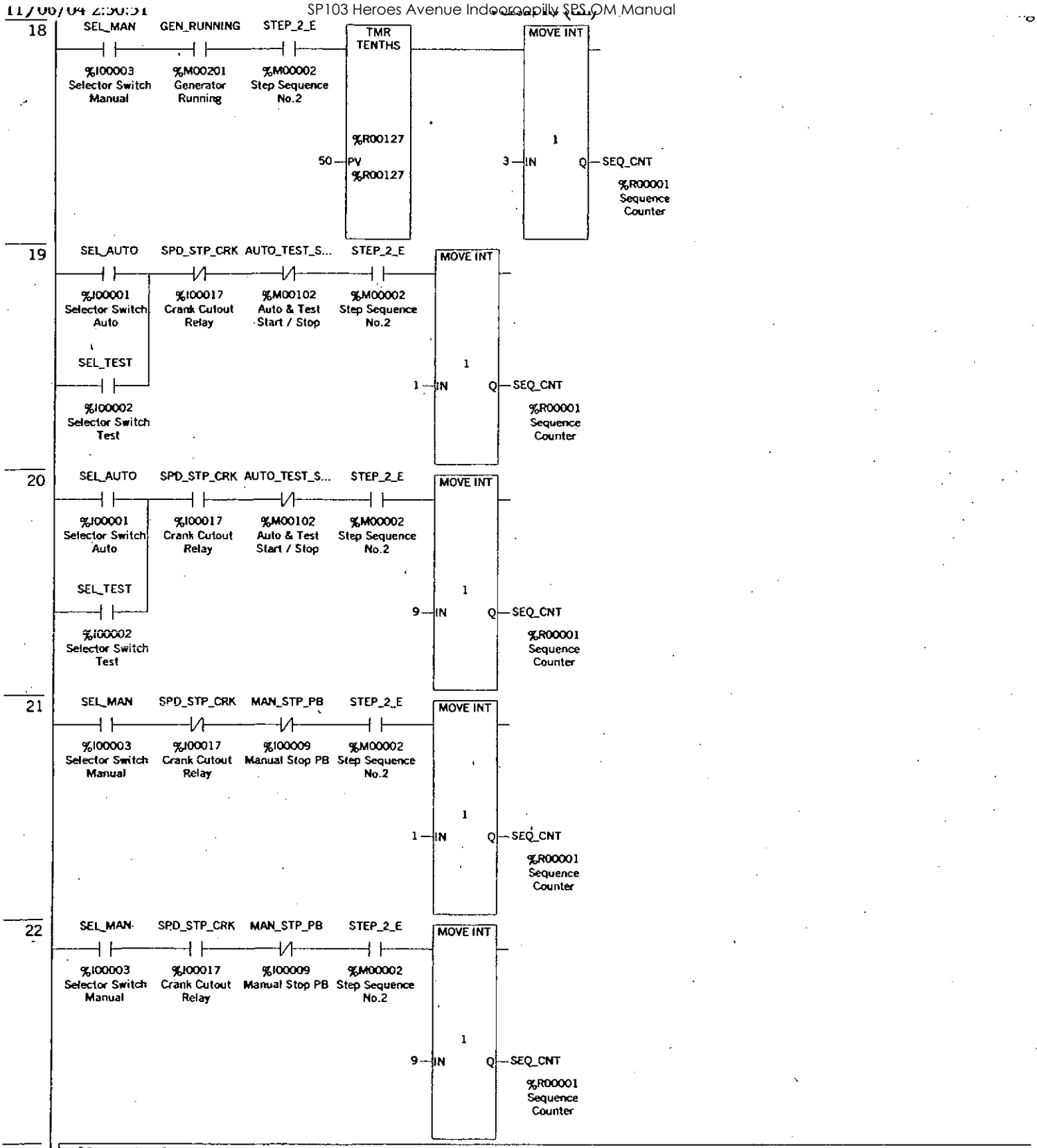

P m: BCC_4000_4 A:

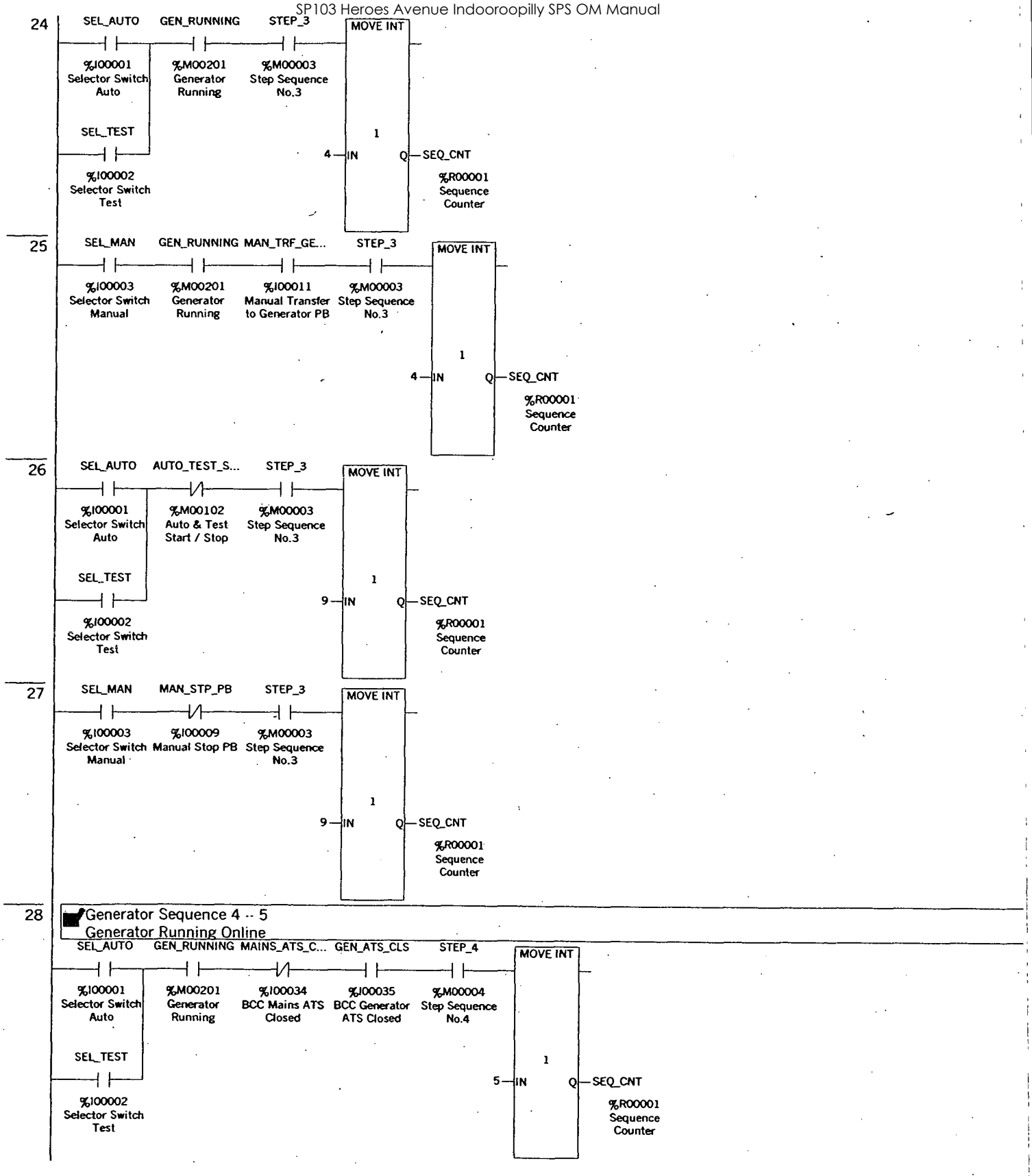

I ...am: BCC_4000_4 A:

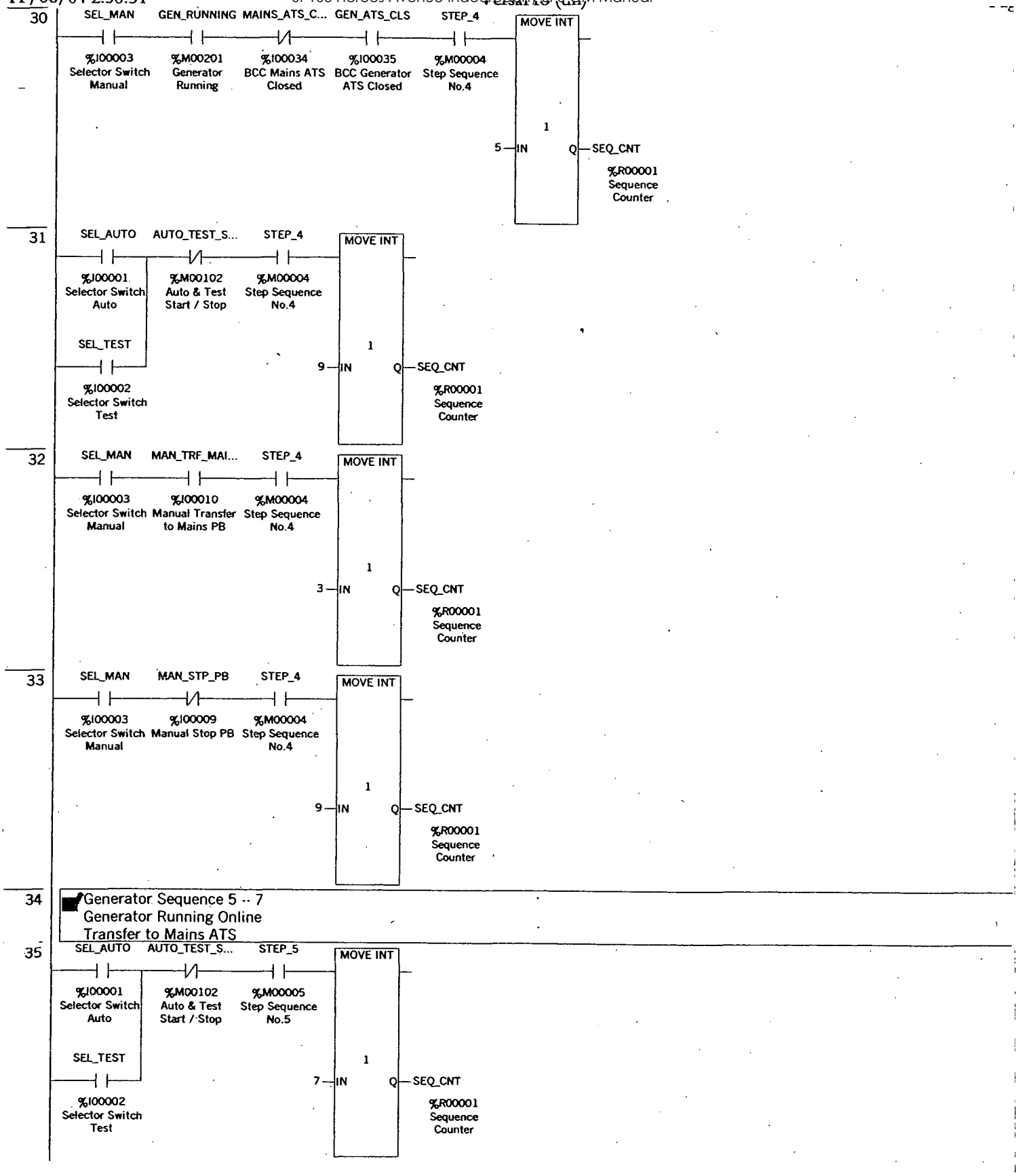

...am: BCC_4000_4 A:

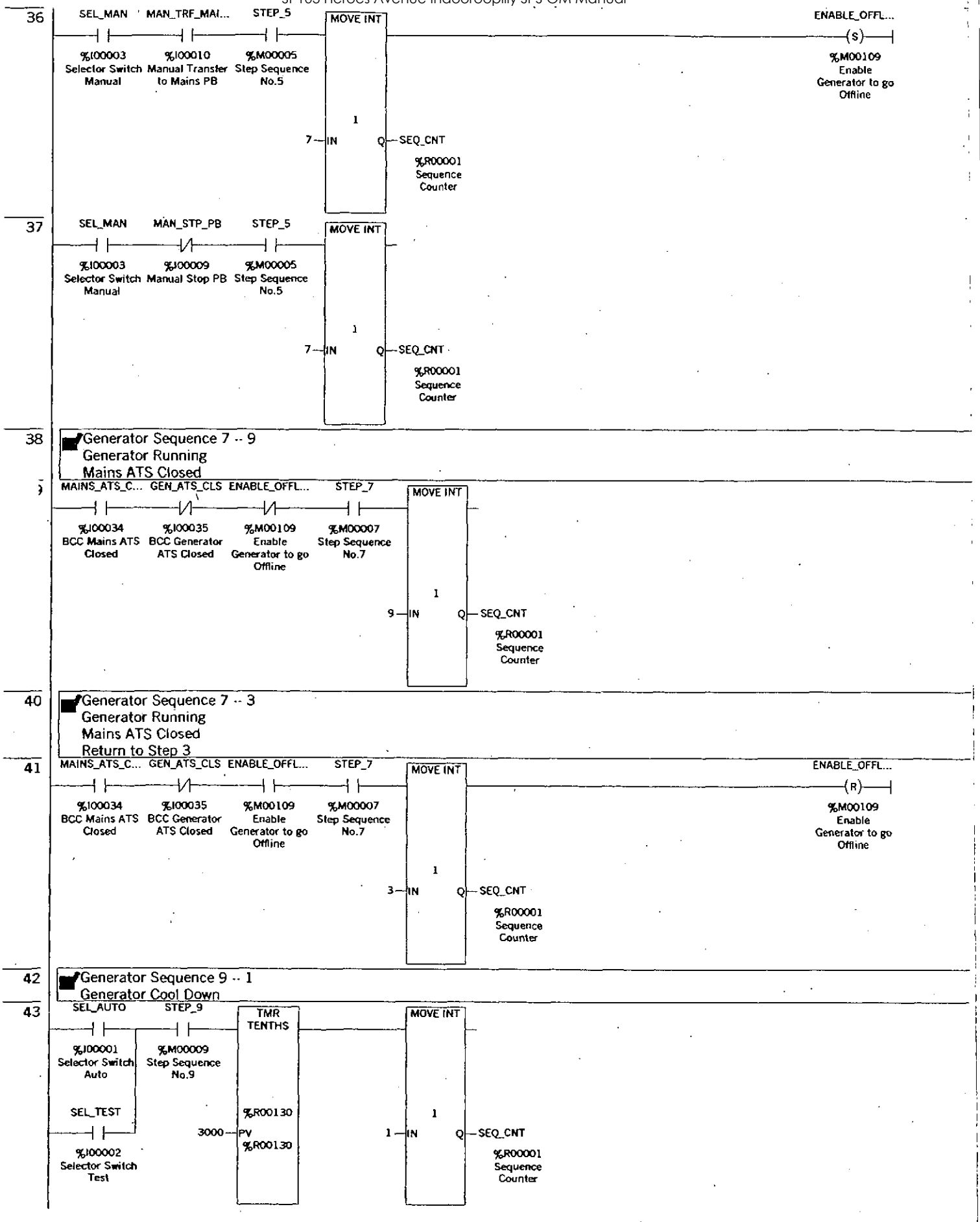

Program: BCC_4000_4 A:

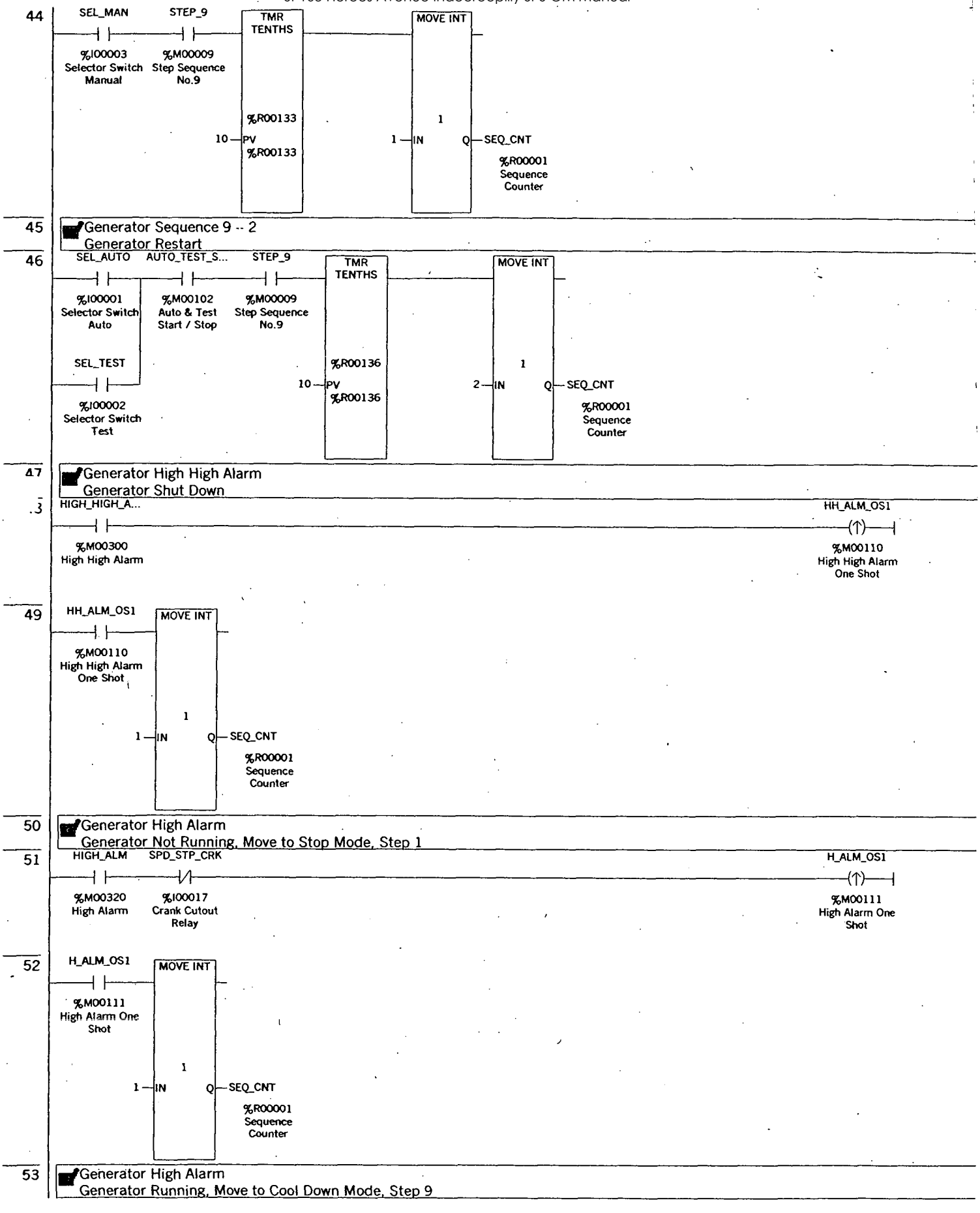

P...m: BCC_4000_4 A: S

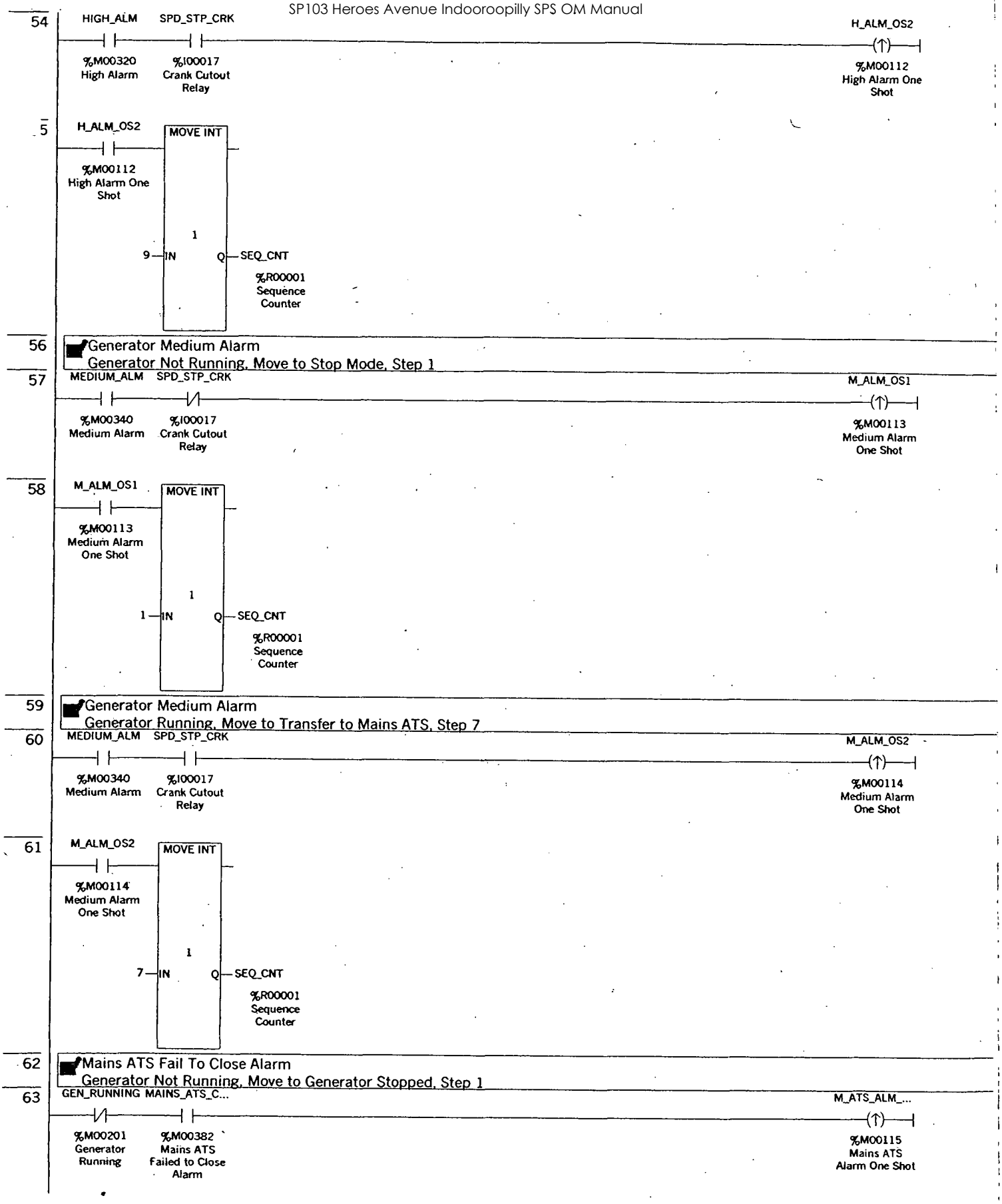

I um: BCC_4000_4 A:

64

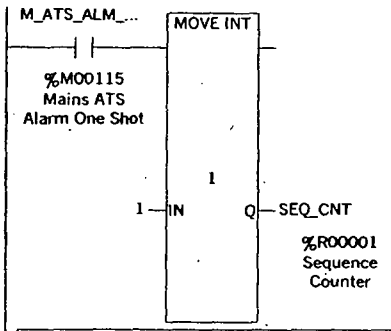

65

Mains ATS Fail To Close Alarm
Generator Running, Move to Transfer to Generator ATS, Step 4

66

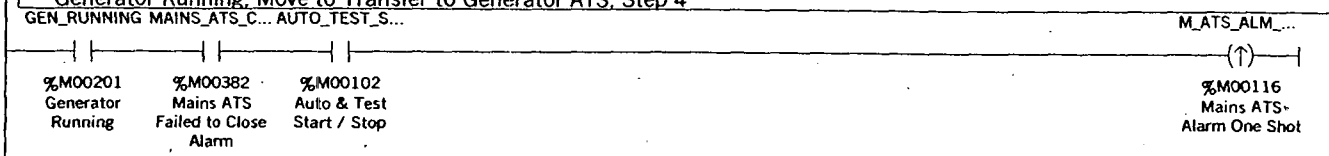

67

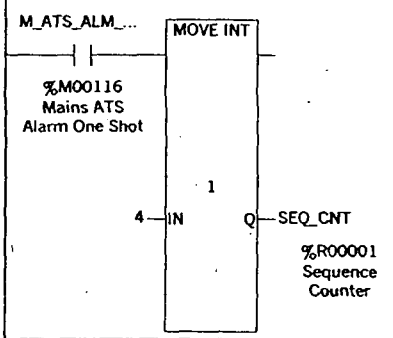

68

Generator Sequence Counter is Out of Range.
Reset to Step 1

69

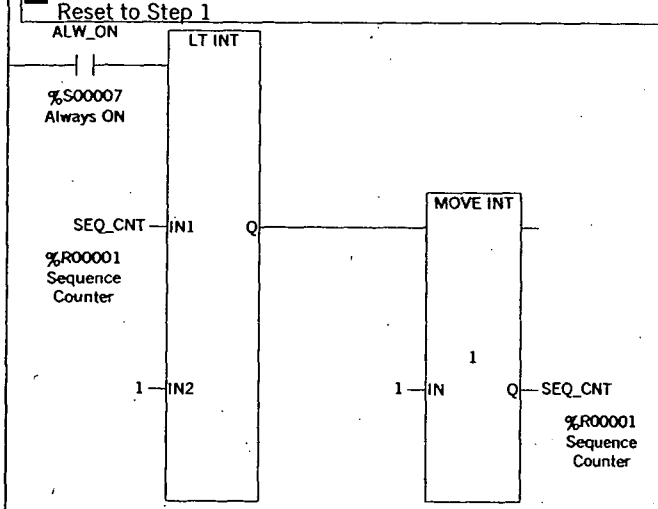

70

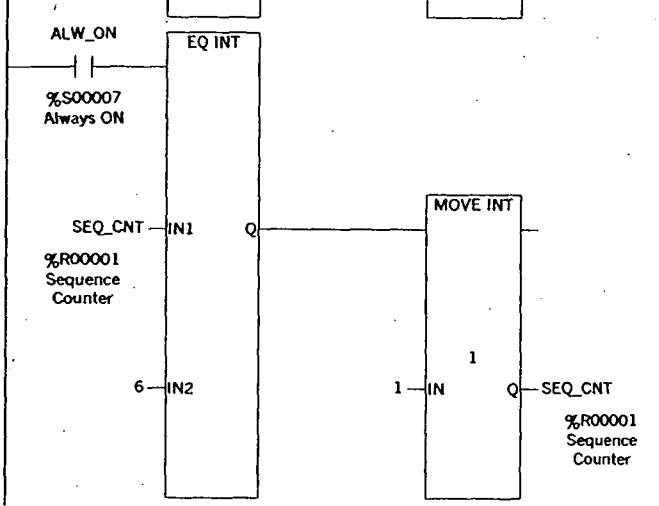

Pr x: BCC_4000_4 A: S

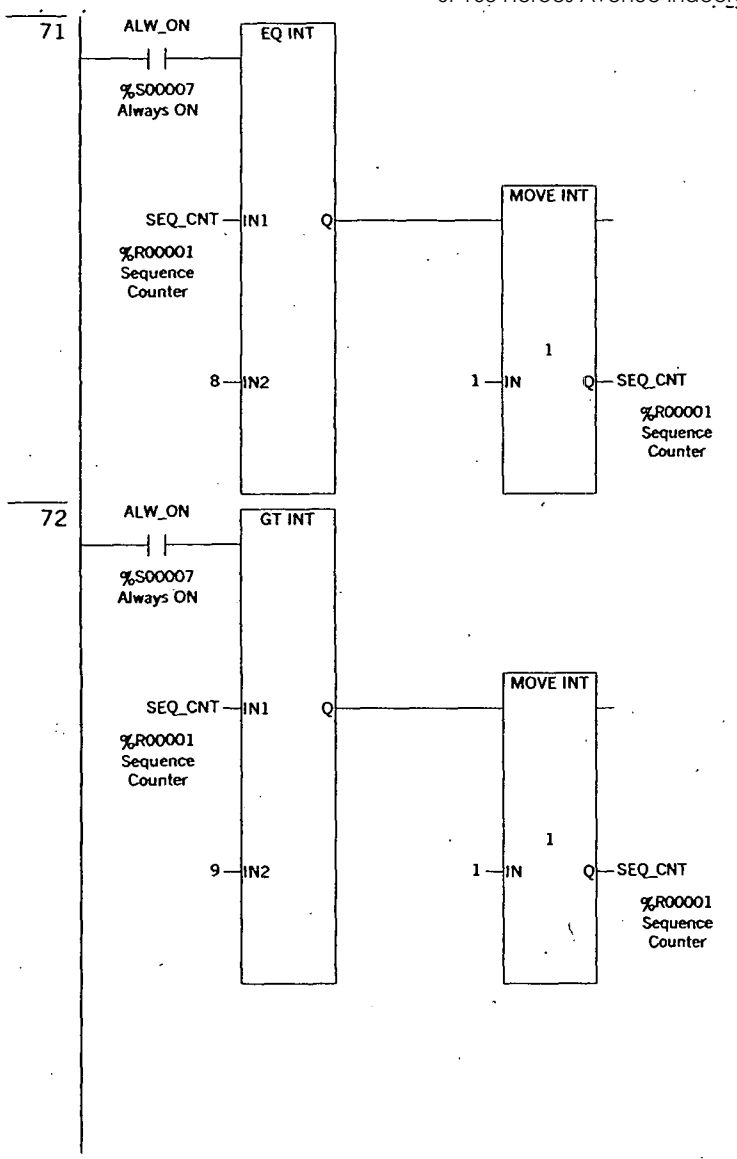

F m: BCC_4000_4 A:

1 Generator High High Alarms

2

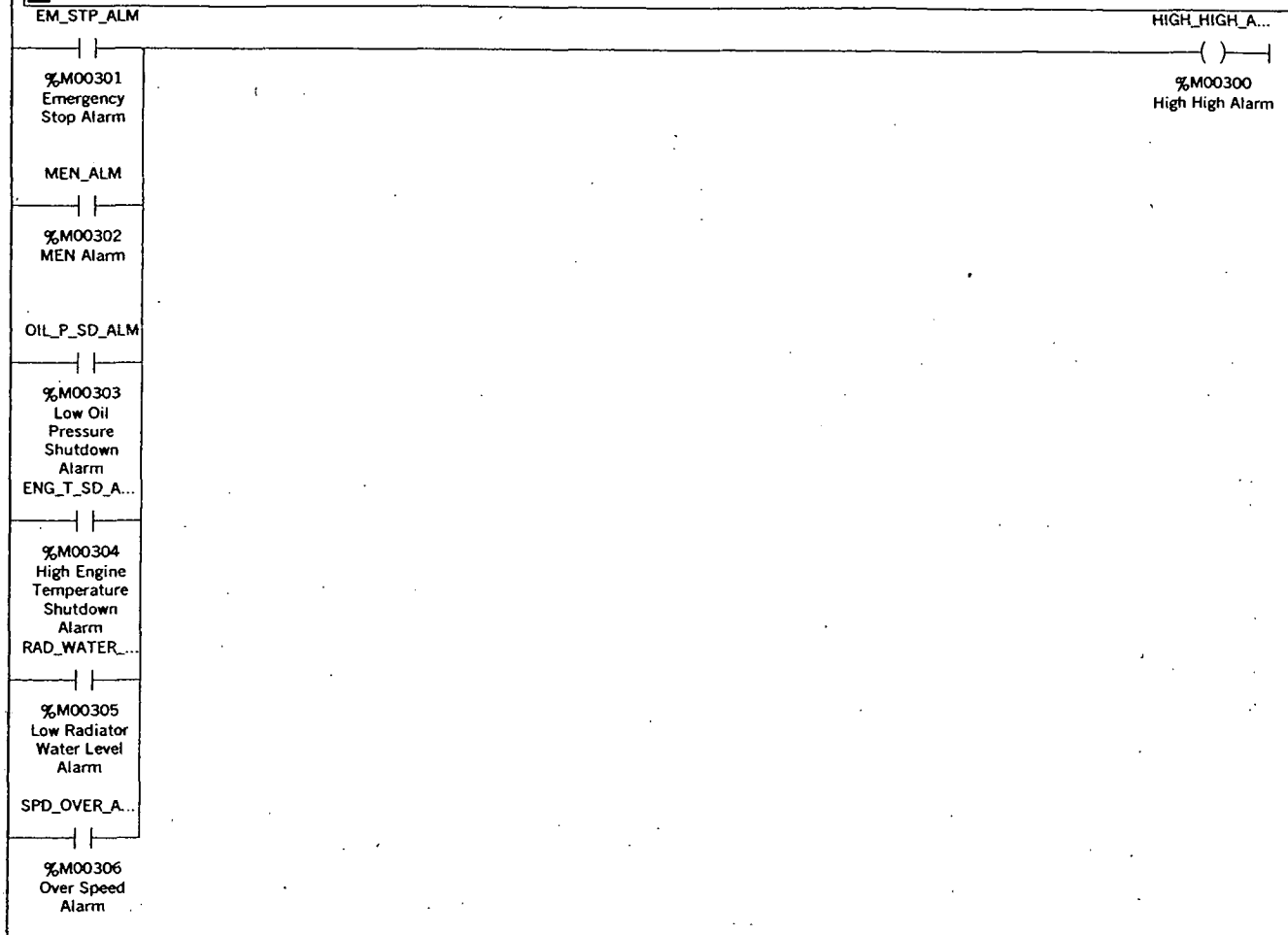

3 Generator High Alarms

4

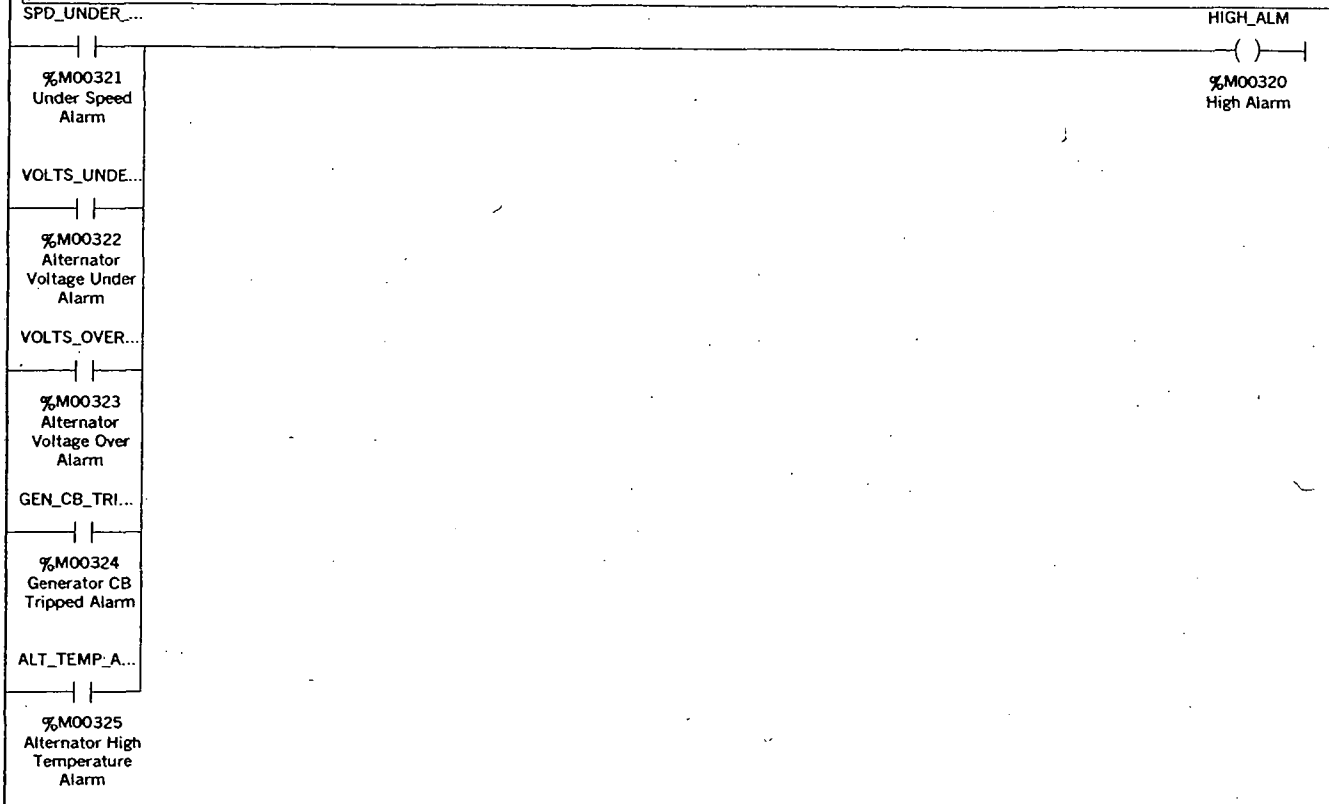

5 Generator Medium Alarms

ram: BCC_4000_4 A: ALA

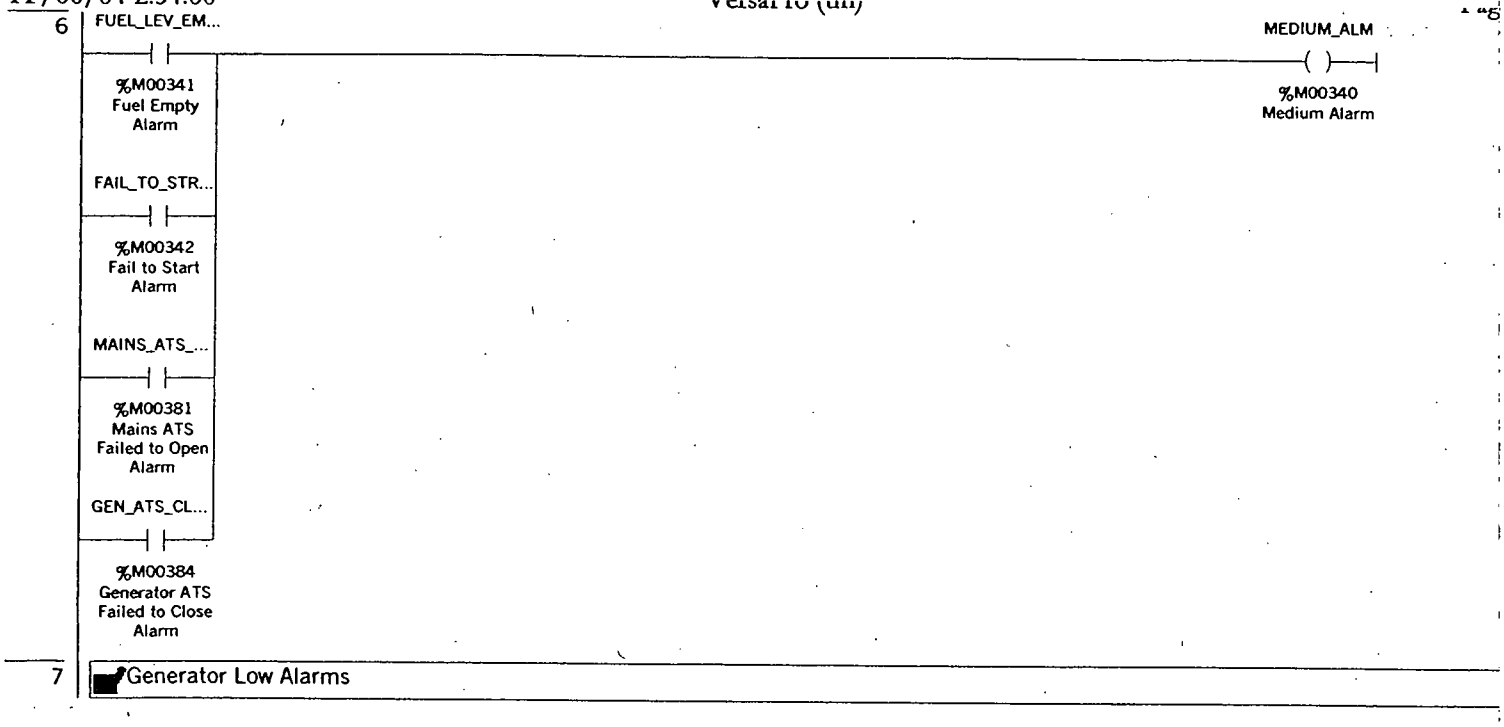
6
FUEL_LEV_EM...
%M00341
Fuel Empty
Alarm
FAIL_TO_STR...
%M00342
Fail to Start
Alarm
MAINS_ATS_...
%M00381
Mains ATS
Failed to Open
Alarm
GEN_ATS_CL...
%M00384
Generator ATS
Failed to Close
Alarm
MEDIUM_ALM
%M00340
Medium Alarm
7
Generator Low Alarms

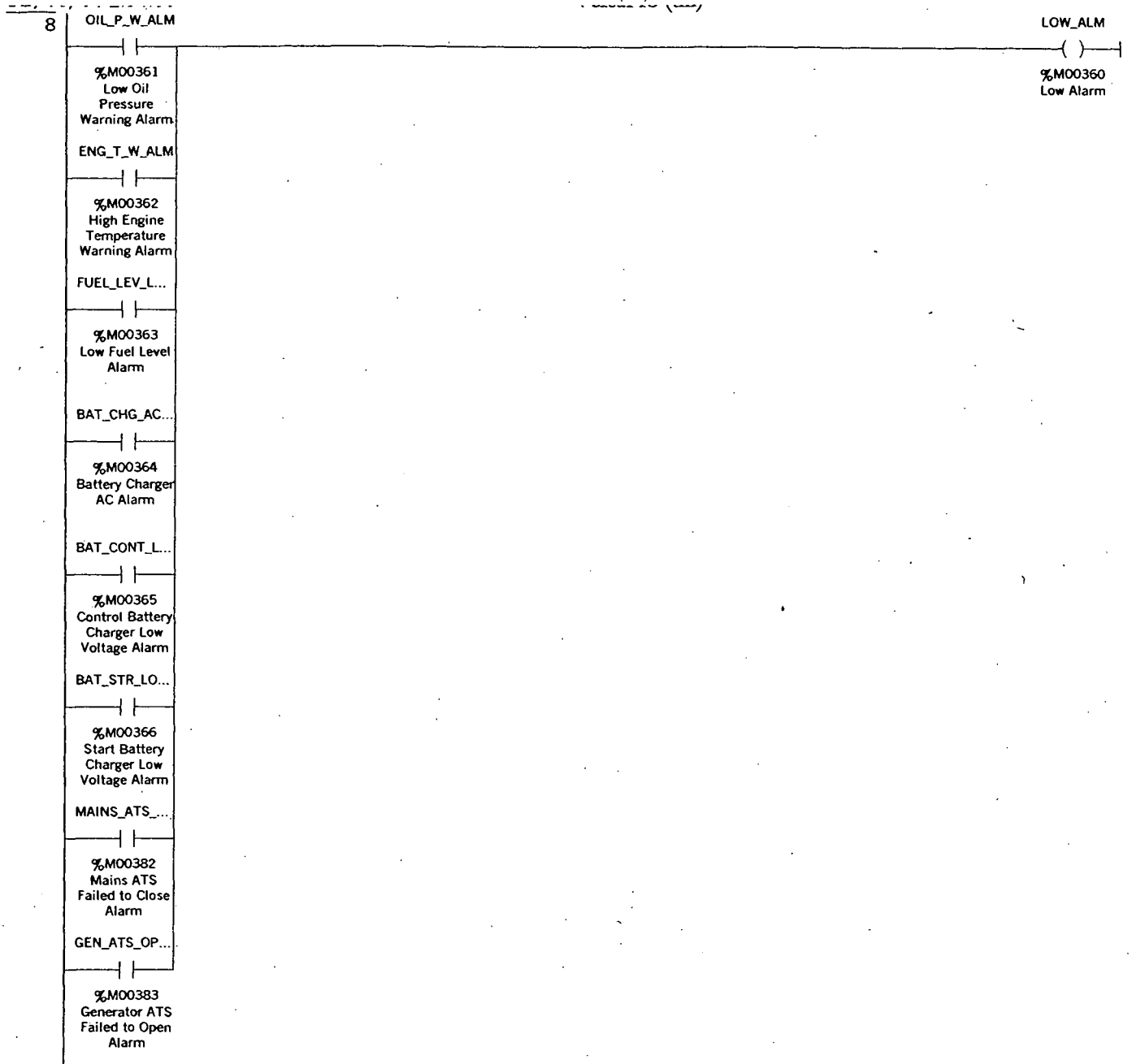

ram: BCC_4000_4 A: ALA

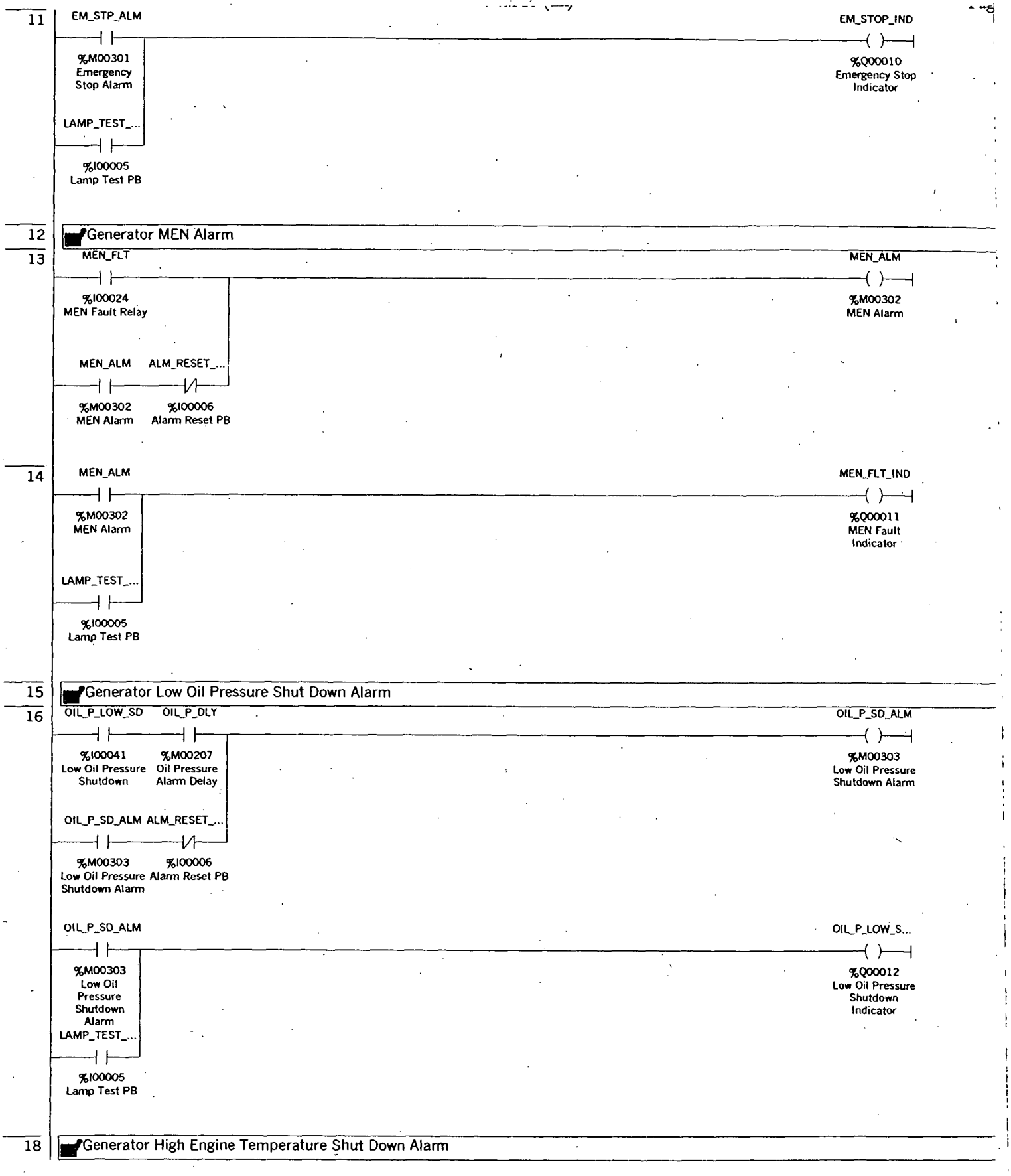

I um: BCC_4000_4 A: ALA

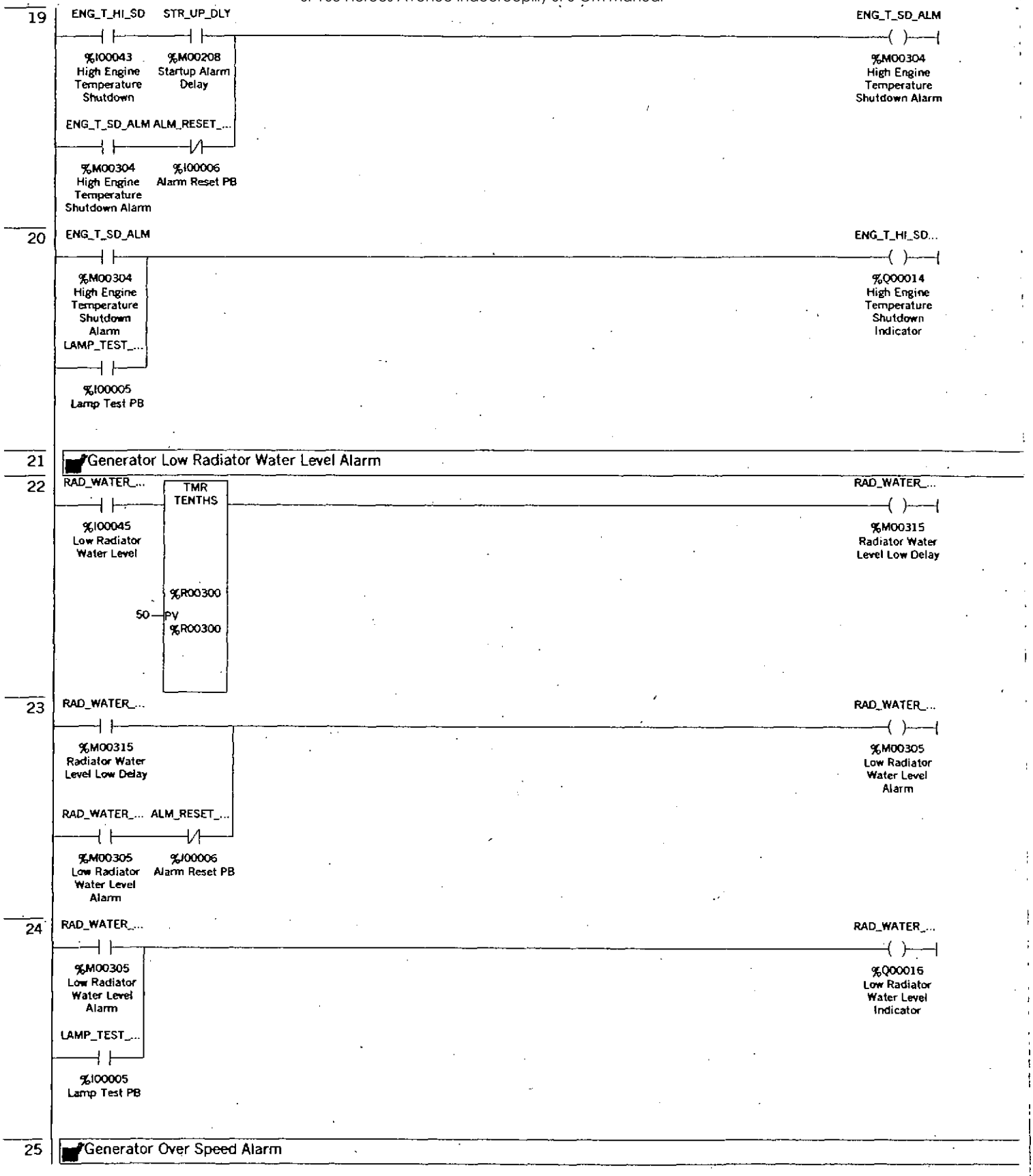

am: BCC_4000_4 A: ALA

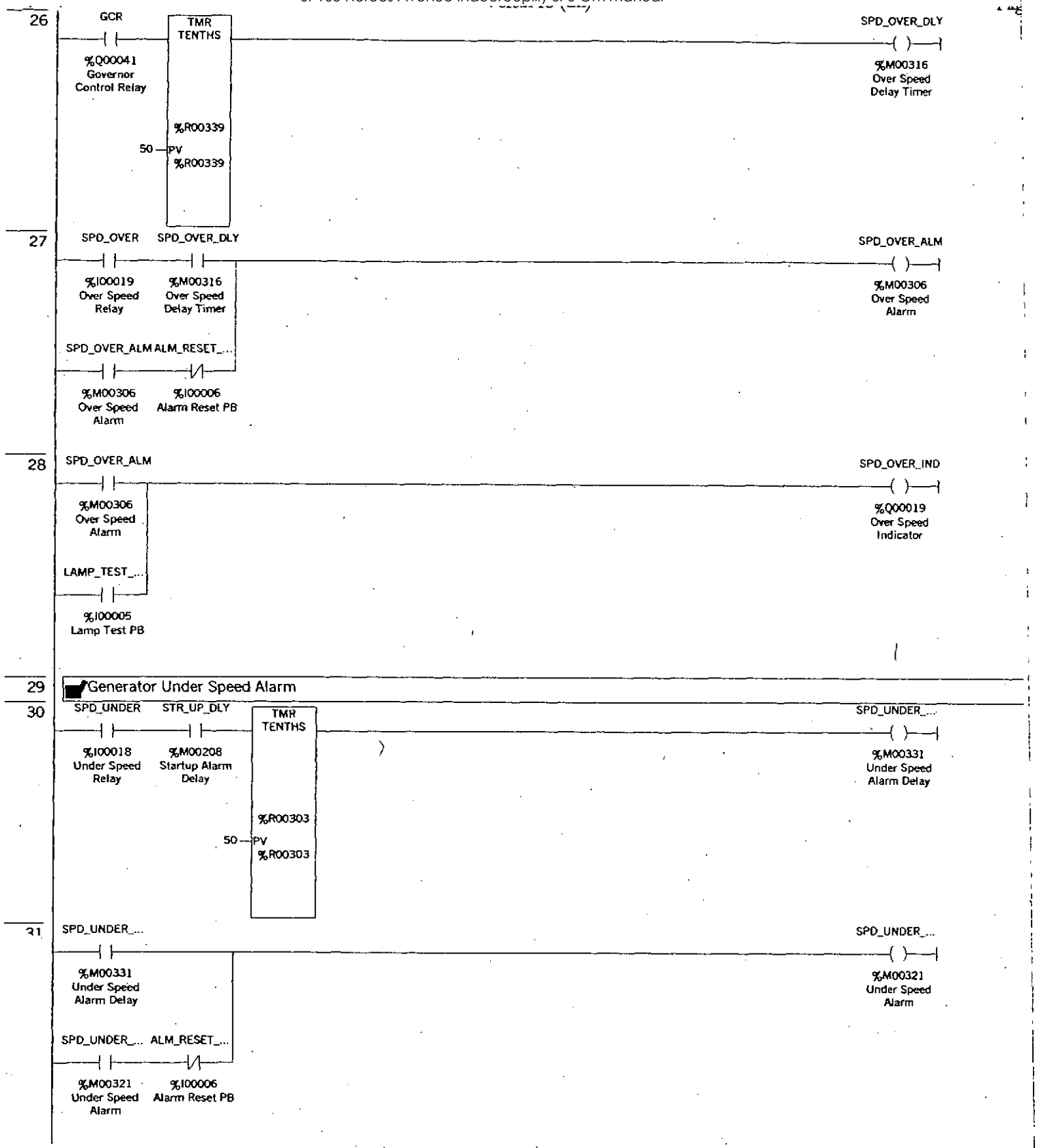

I m: BCC_4000_4 A: ALA

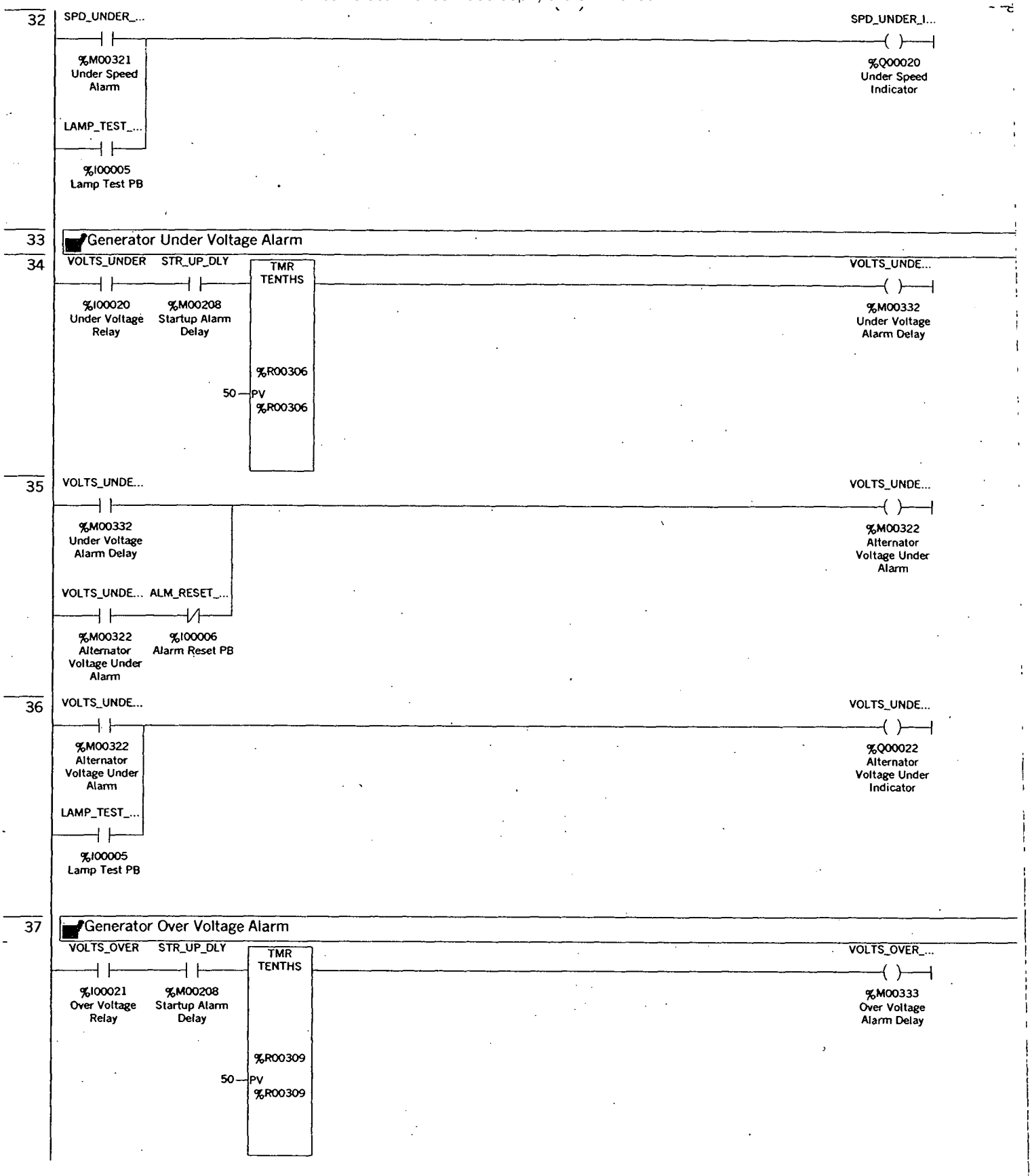

P m: BCC_4000_4 A: ALA

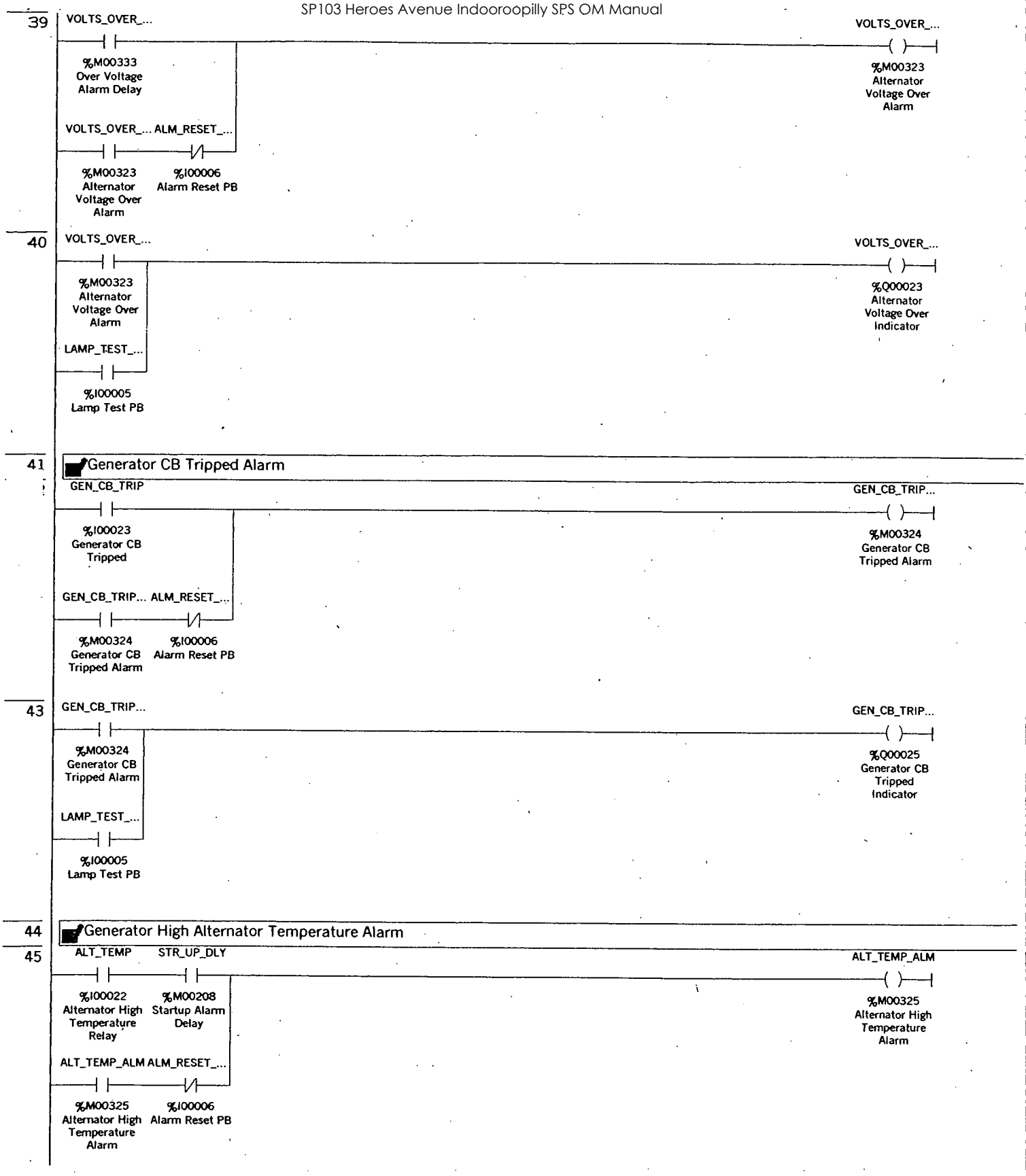

Program: BCC_4000_4 A: ALA

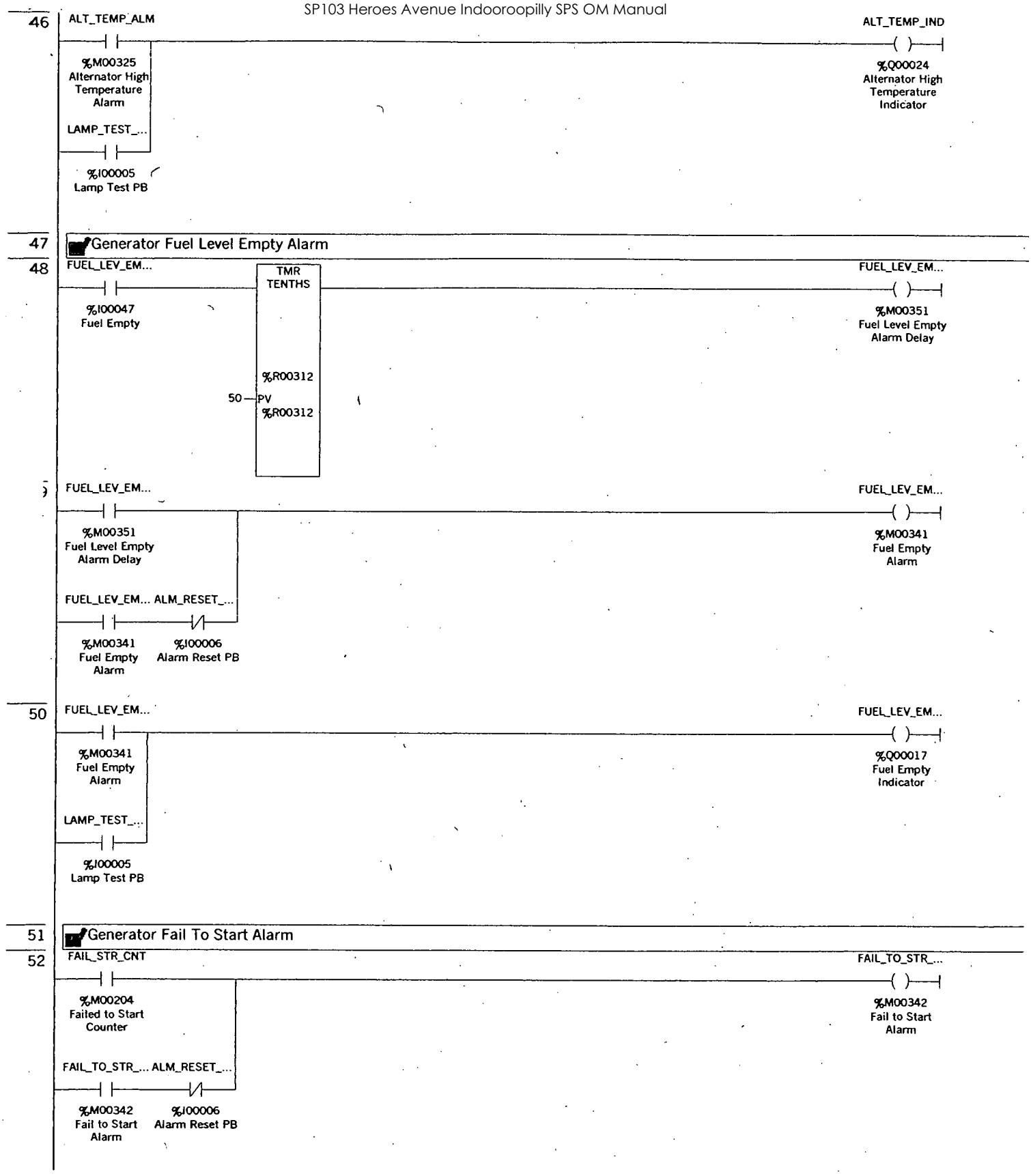

Program: BCC_4000_4 A: ALA

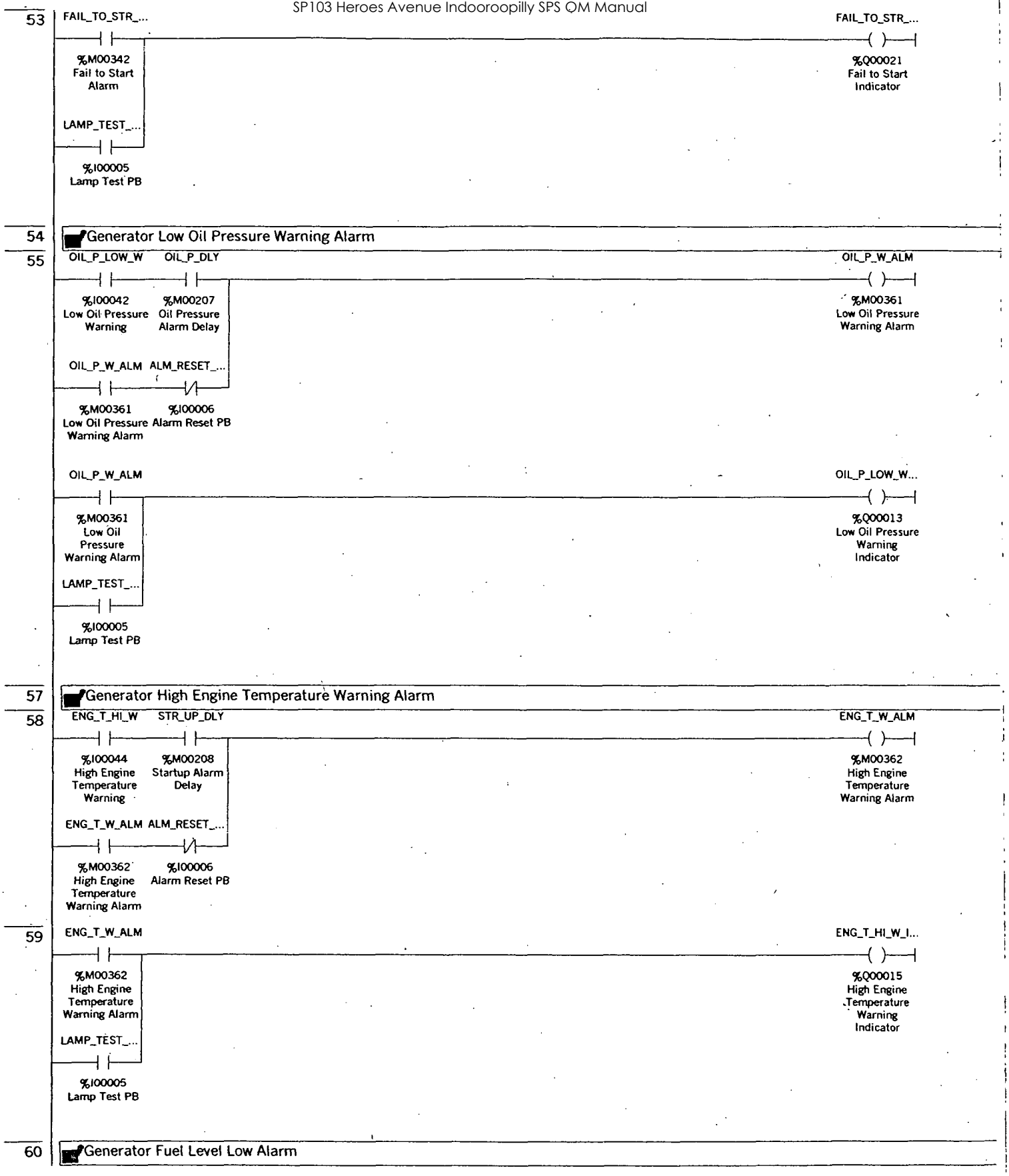

Program: BCC_4000_4

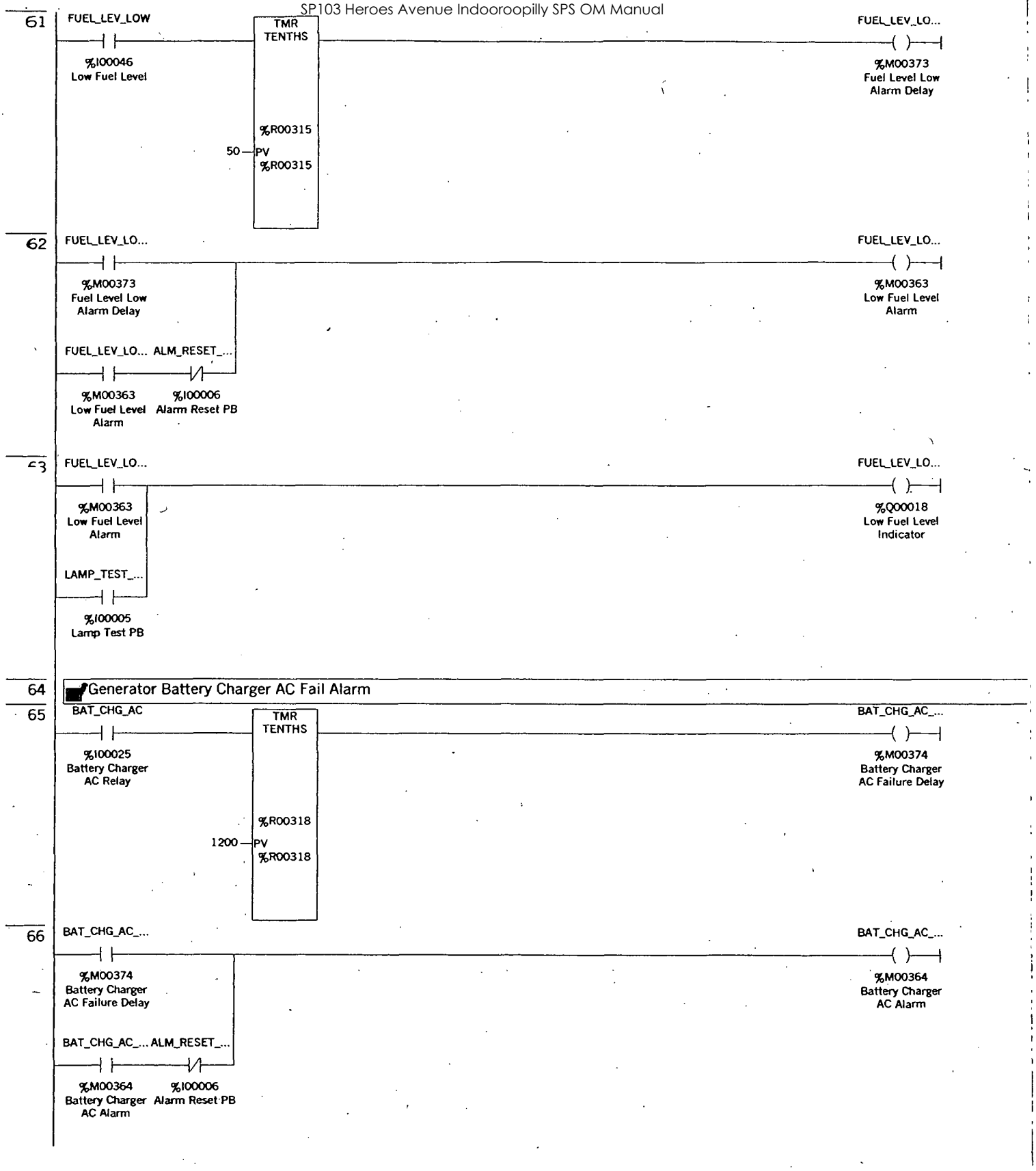

Program: BCC_4000_4 A: AL

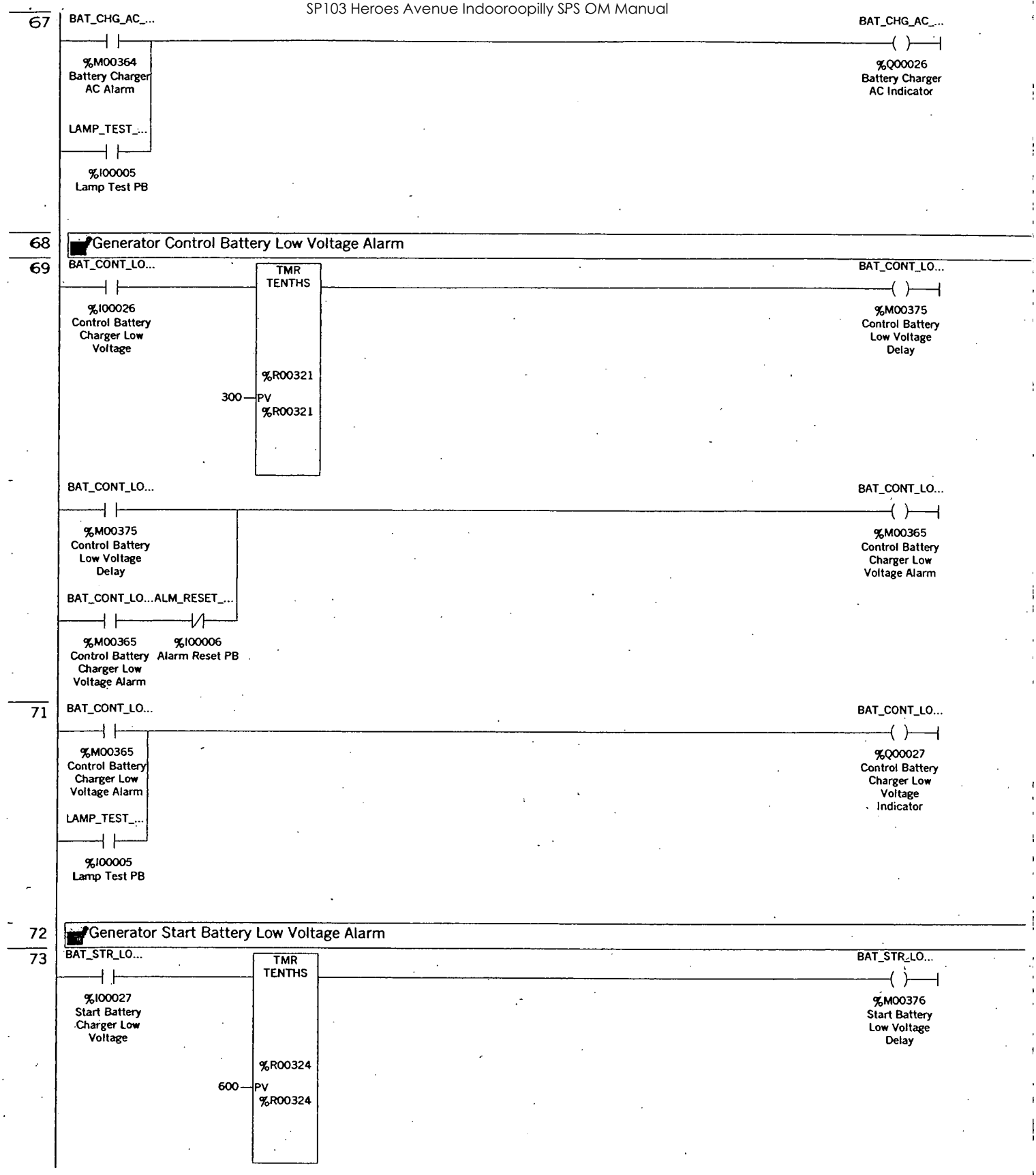

Program: BCC_4000_4 A: ALA

74

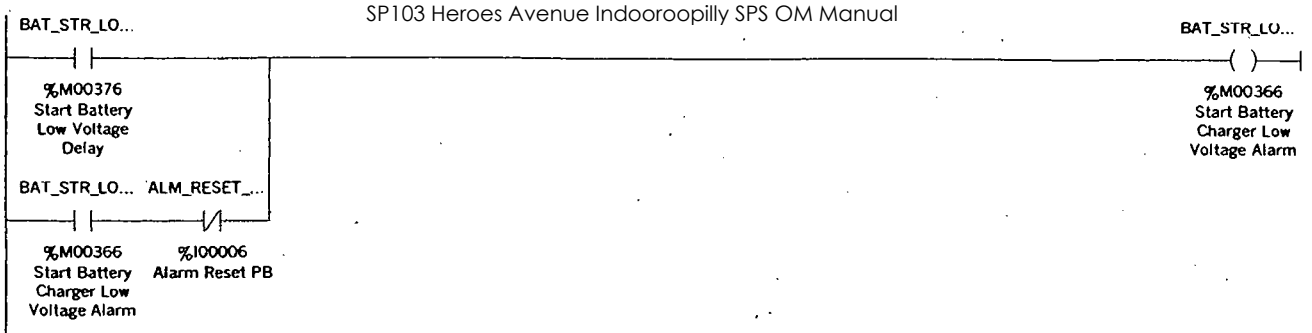

75

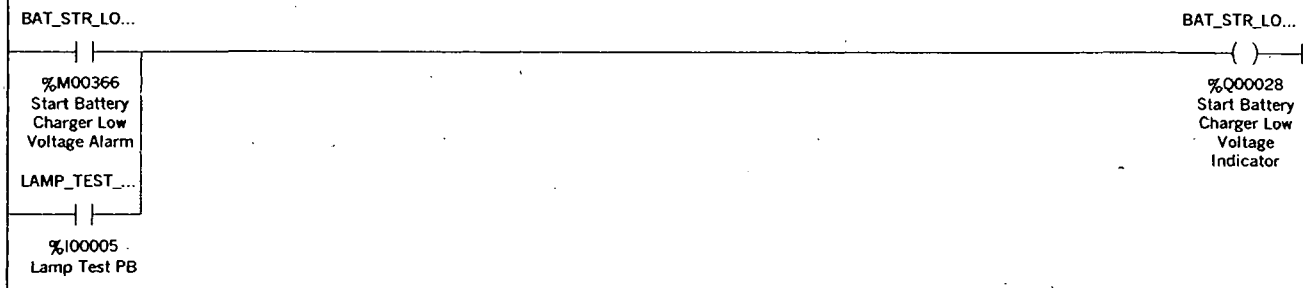

76 Mains ATS Fail to Open Alarm

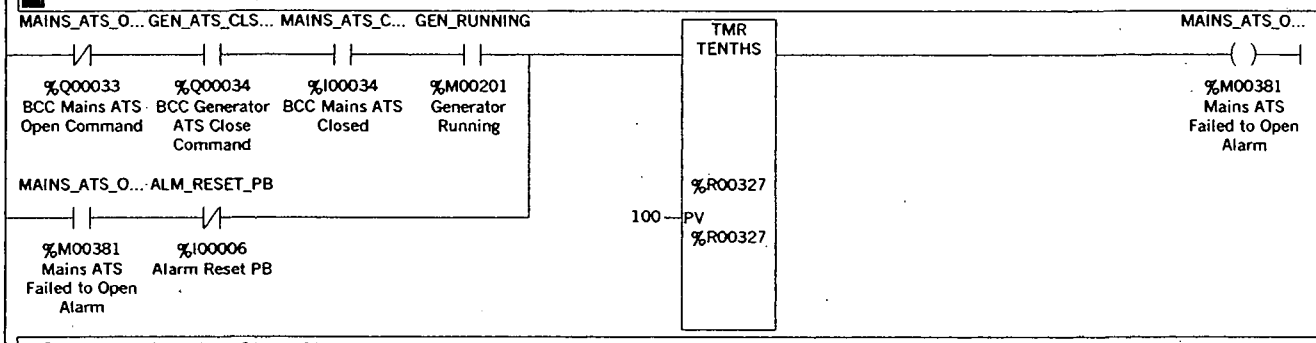

78 Mains ATS Fail to Close Alarm

79

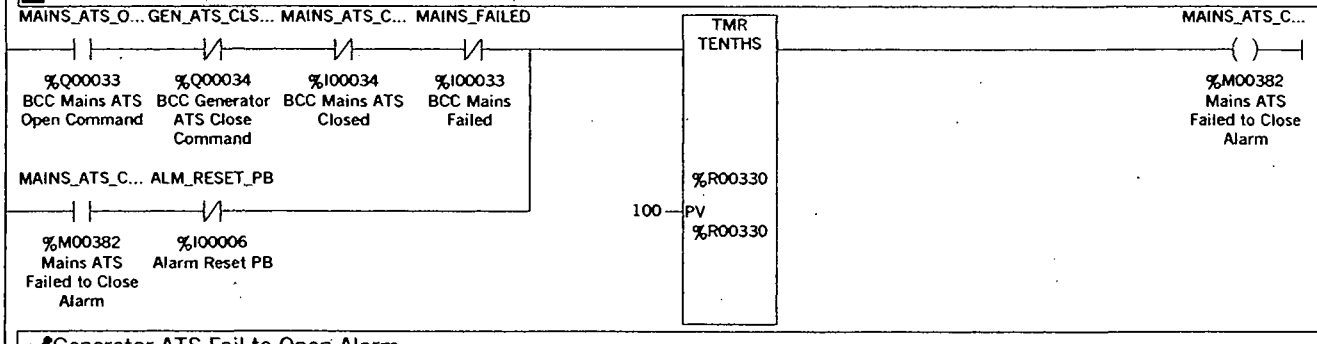

80 Generator ATS Fail to Open Alarm

81

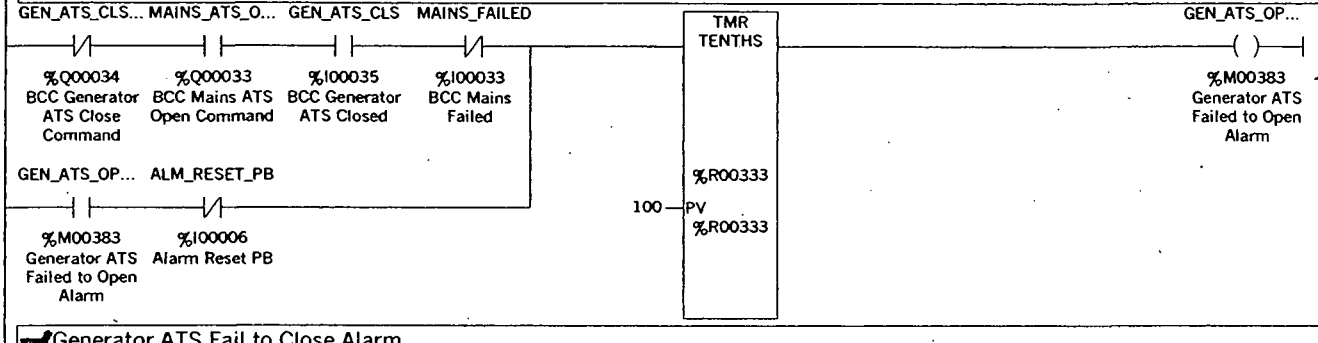

82 Generator ATS Fail to Close Alarm

Program: BCC_4000_4 A: AL/

83

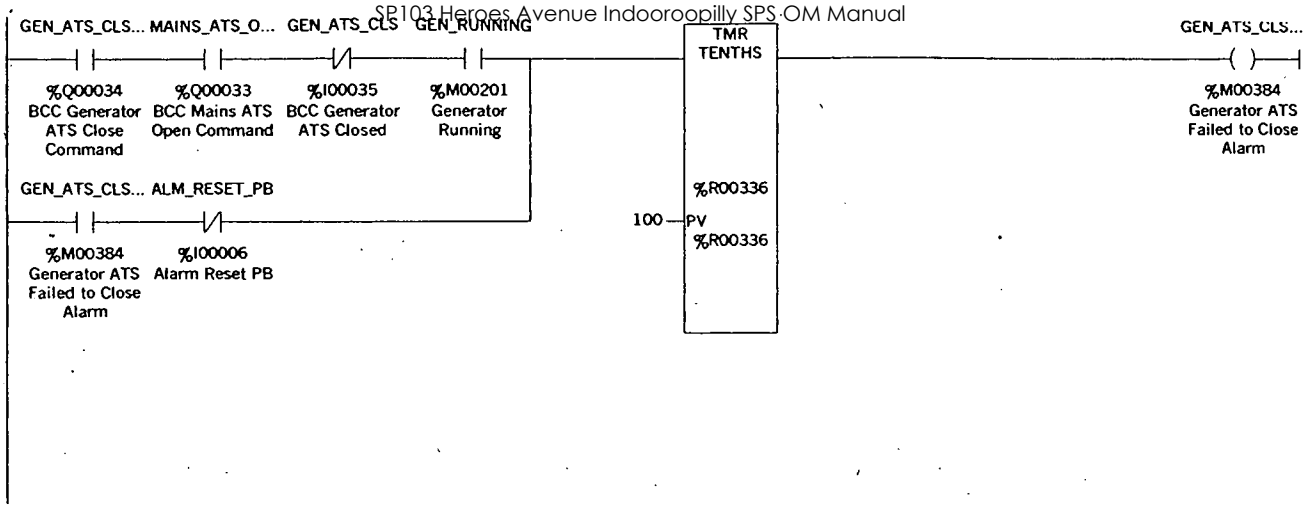

Program: BCC_4000_4 A: ALA

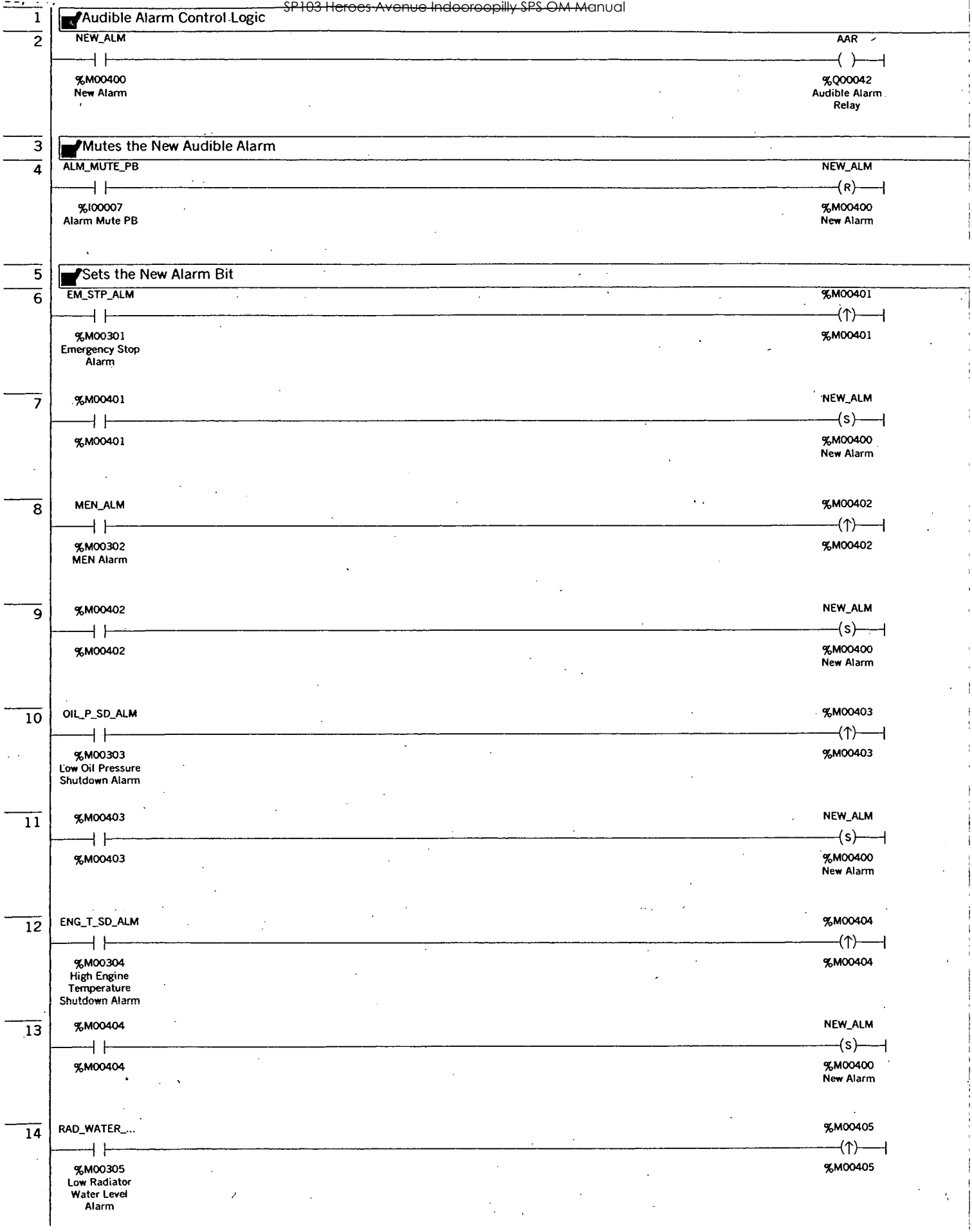

Program: BCC_4000_4 A: AUD_

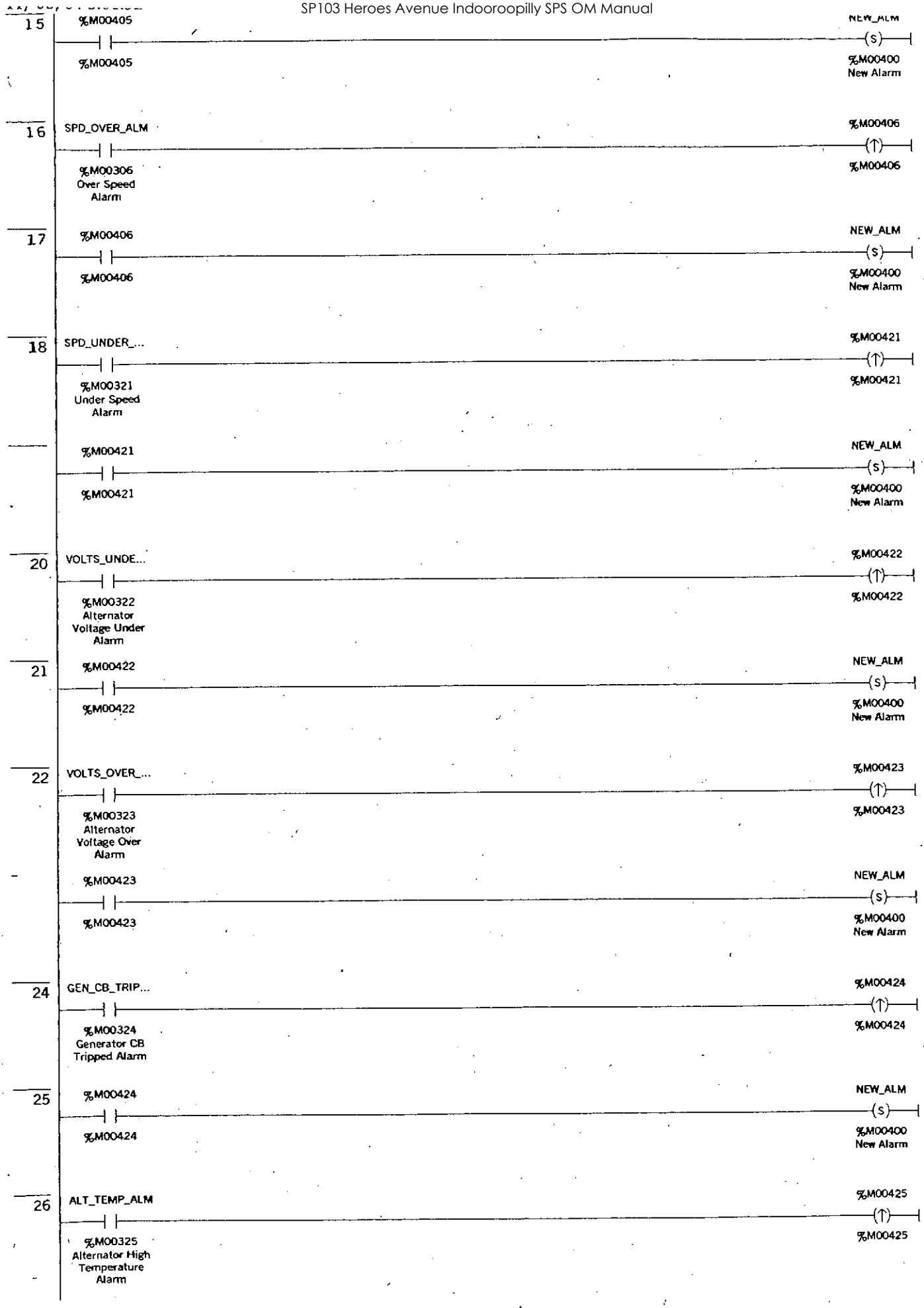

Program: BCC_4000_4 A: AUD_

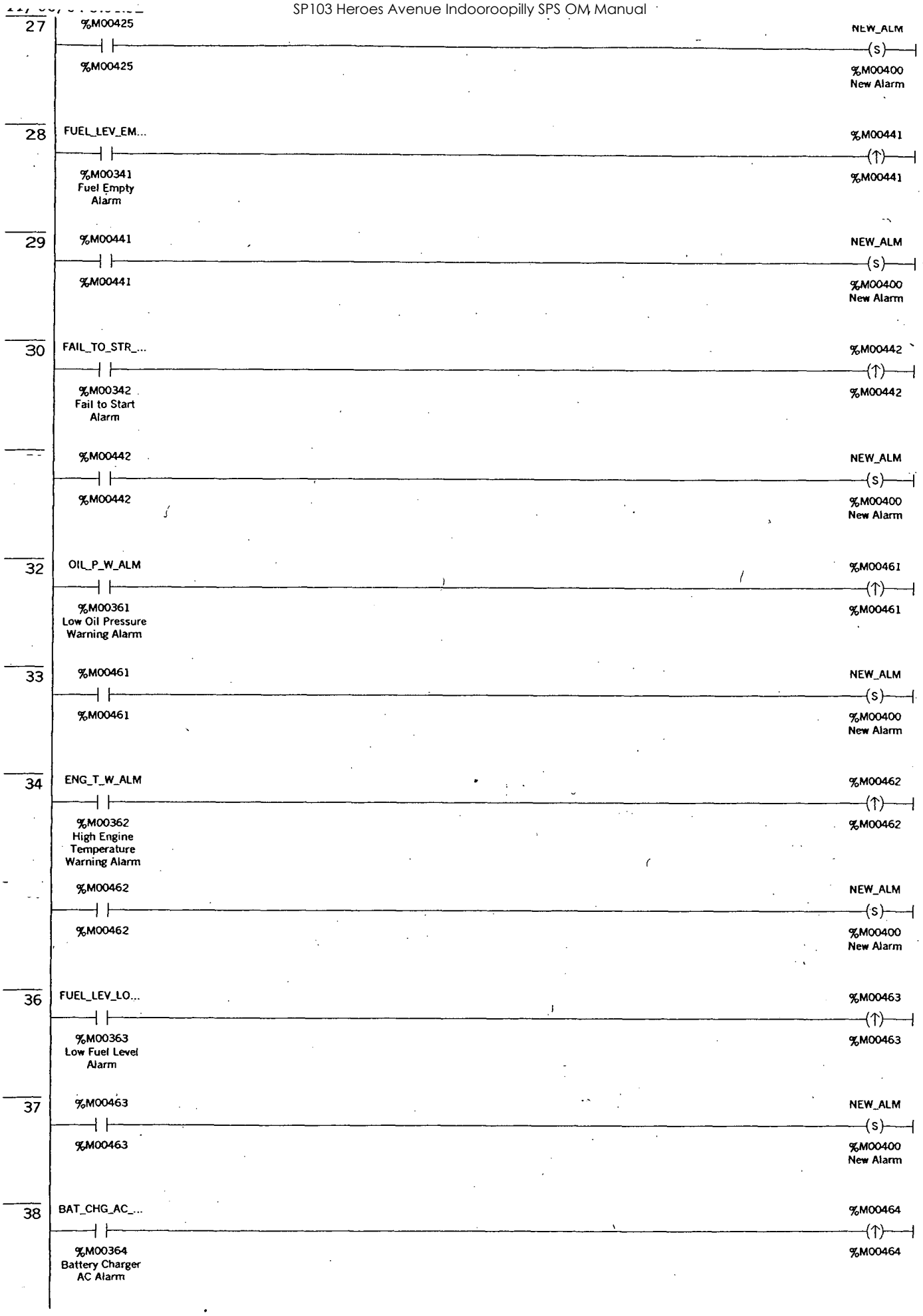

Program: BCC_4000_4 A: AUD_

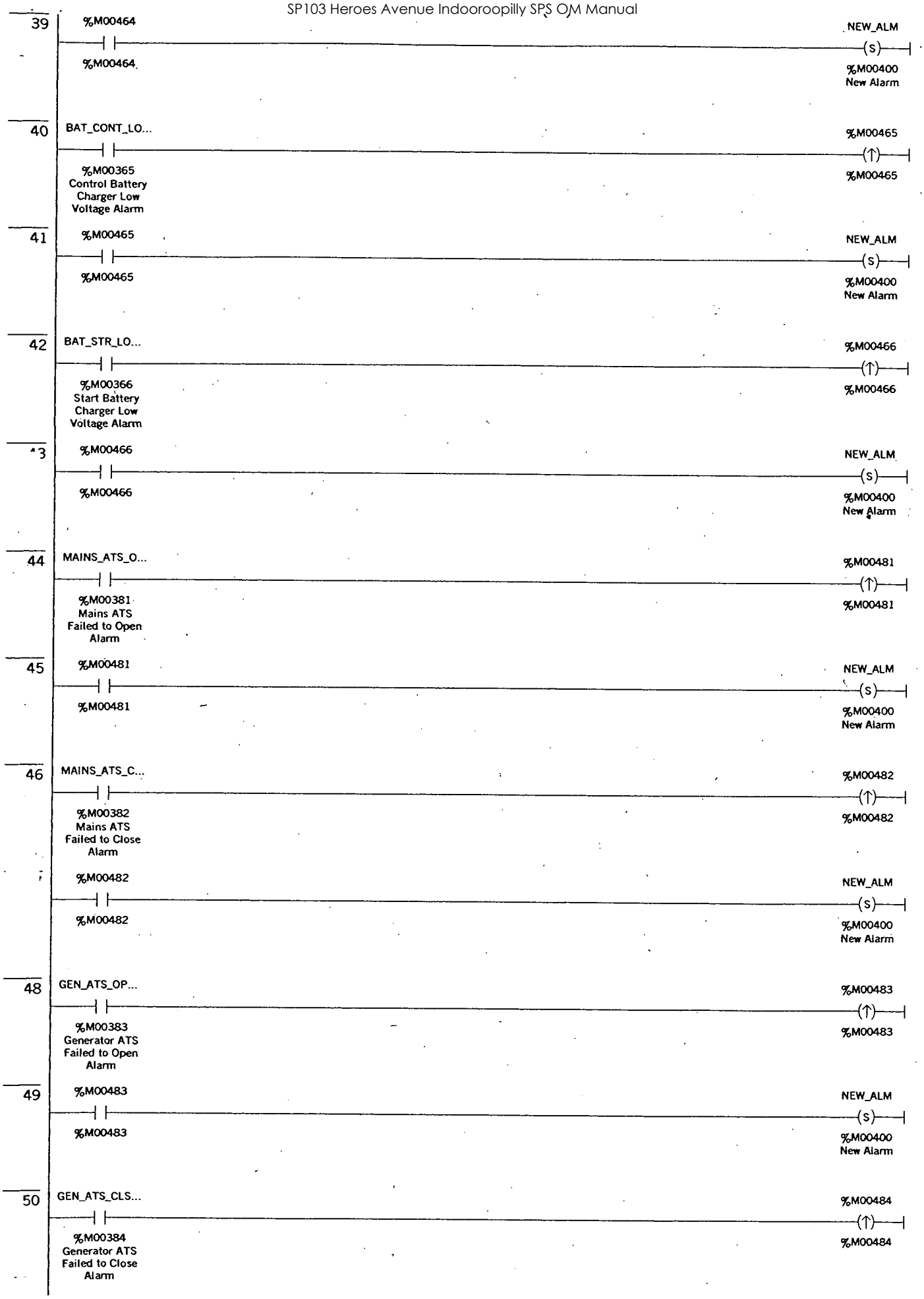

Program: BCC_4000_4 A: AUD_A

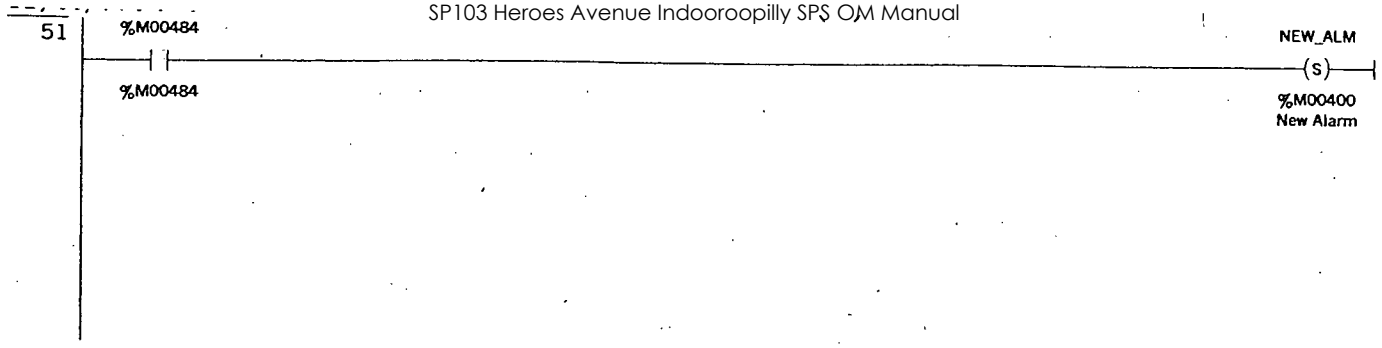

Program: BCC_4000_4 A: AUD_/

NTB Design

Folder Name..... BCC_4000_2
Nickname..... C4000_2
Location..... C:\Program Files\GE Fanuc Automation\VersaPro \Project\BCC_4000_2
Created.....27-Jun-03, 16:36:03
Modified..... 03-Jul-03, 18:02:02
Description.....BCC, Standby Generator, 4000

Block Name:..... AUD_ALM.blk
Description:..... Control Logic for the Audiable Alarm Logic.
Block Type:.....Ladder

1 Audible Alarm Control Logic

2 NEW_ALM → %M00400 New Alarm ( ) AAR → %Q00042 Audible Alarm Relay

3 Mutes the New Audible Alarm

4 ALM_MUTE_PB → %I00007 Alarm Mute PB (R) NEW_ALM → %M00400 New Alarm

5 Sets the New Alarm Bit

6 EM_STP_ALM → %M00301 Emergency Stop Alarm (↑) %M00401 → %M00401

7 %M00401 → %M00401 (S) NEW_ALM → %M00400 New Alarm

8 MEN_ALM → %M00302 MEN Alarm (↑) %M00402 → %M00402

9 %M00402 → %M00402 (S) NEW_ALM → %M00400 New Alarm

10 OIL_P_SD_ALM → %M00303 Low Oil Pressure Shutdown Alarm (↑) %M00403 → %M00403

11 %M00403 → %M00403 (S) NEW_ALM → %M00400 New Alarm

12 ENG_T_SD_ALM → %M00304 High Engine Temperature Shutdown Alarm (↑) %M00404 → %M00404

13 %M00404 → %M00404 (S) NEW_ALM → %M00400 New Alarm

14 RAD_WATER_LOW_ALM → %M00305 Low Radiator Water Level Alarm (↑) %M00405 → %M00405

15 %M00405 → %M00405 (S) NEW_ALM → %M00400 New Alarm

16 SPD_OVER_ALM → %M00306 Over Speed Alarm (↑) %M00406 → %M00406

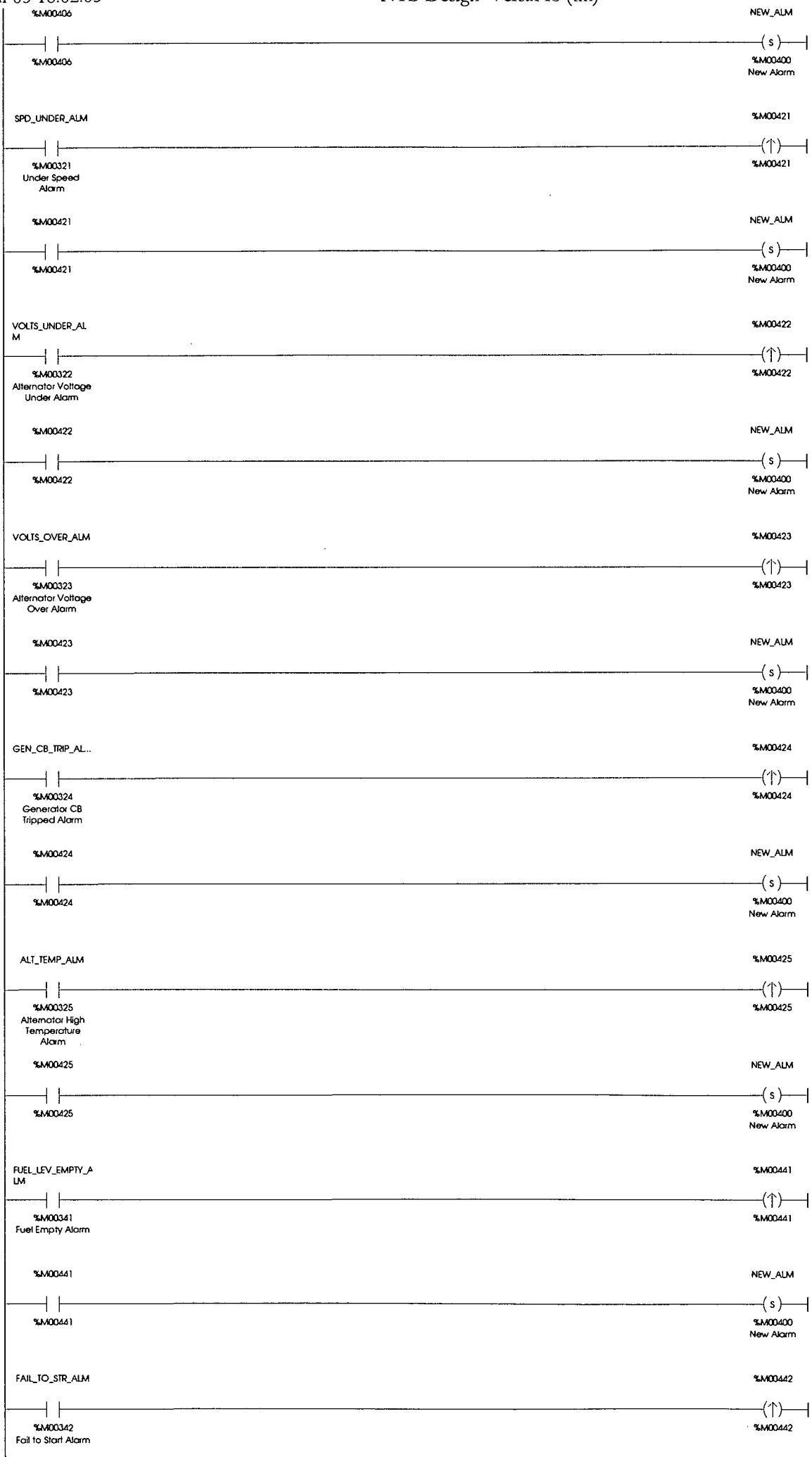
17
%M00406
%M00406
NEW_ALM
(s)
%M00400
New Alarm
18
SPD_UNDER_ALM
%M00321
Under Speed Alarm
%M00421
(↑)
%M00421
19
%M00421
%M00421
NEW_ALM
(s)
%M00400
New Alarm
20
VOLTS_UNDER_ALM
%M00322
Alternator Voltage Under Alarm
%M00422
(↑)
%M00422
21
%M00422
%M00422
NEW_ALM
(s)
%M00400
New Alarm
22
VOLTS_OVER_ALM
%M00323
Alternator Voltage Over Alarm
%M00423
(↑)
%M00423
23
%M00423
%M00423
NEW_ALM
(s)
%M00400
New Alarm
24
GEN_CB_TRIP_AL...
%M00324
Generator CB Tripped Alarm
%M00424
(↑)
%M00424
25
%M00424
%M00424
NEW_ALM
(s)
%M00400
New Alarm
26
ALT_TEMP_ALM
%M00325
Alternator High Temperature Alarm
%M00425
(↑)
%M00425
27
%M00425
%M00425
NEW_ALM
(s)
%M00400
New Alarm
28
FUEL_LEV_EMPTY_ALM
%M00341
Fuel Empty Alarm
%M00441
(↑)
%M00441
29
%M00441
%M00441
NEW_ALM
(s)
%M00400
New Alarm
30
FAIL_TO_STR_ALM
%M00342
Fail to Start Alarm
%M00442
(↑)
%M00442

31
%M00442
%M00442
NEW_ALM
(S)
%M00400
New Alarm

3
OIL_P_W_ALM
%M00361
Low Oil Pressure
Warning Alarm
%M00461
(↑)
%M00461

33
%M00461
%M00461
NEW_ALM
(S)
%M00400
New Alarm

34
ENG_T_W_ALM
%M00362
High Engine
Temperature
Warning Alarm
%M00462
(↑)
%M00462

35
%M00462
%M00462
NEW_ALM
(S)
%M00400
New Alarm

EL_LEV_LOW_AL
%M00363
Low Fuel Level
Alarm
%M00463
(↑)
%M00463

37
%M00463
%M00463
NEW_ALM
(S)
%M00400
New Alarm

38
BAT_CHG_AC_AL
M
%M00364
Battery Charger
AC Alarm
%M00464
(↑)
%M00464

39
%M00464
%M00464
NEW_ALM
(S)
%M00400
New Alarm

AT_CONT_LOW_
_ALM
%M00365
Control Battery
Charger Low
Voltage Alarm
%M00465
(↑)
%M00465

41
%M00465
%M00465
NEW_ALM
(S)
%M00400
New Alarm

42
BAT_STR_LOW_V_A
LM
%M00366
Start Battery
Charger Low
Voltage Alarm
%M00466
(↑)
%M00466

43
%M00466
%M00466
NEW_ALM
(S)
%M00400
New Alarm

MAINS_ATS_OPN_
LM
%M00381
Mains ATS Failed
to Open Alarm
%M00481
(↑)
%M00481

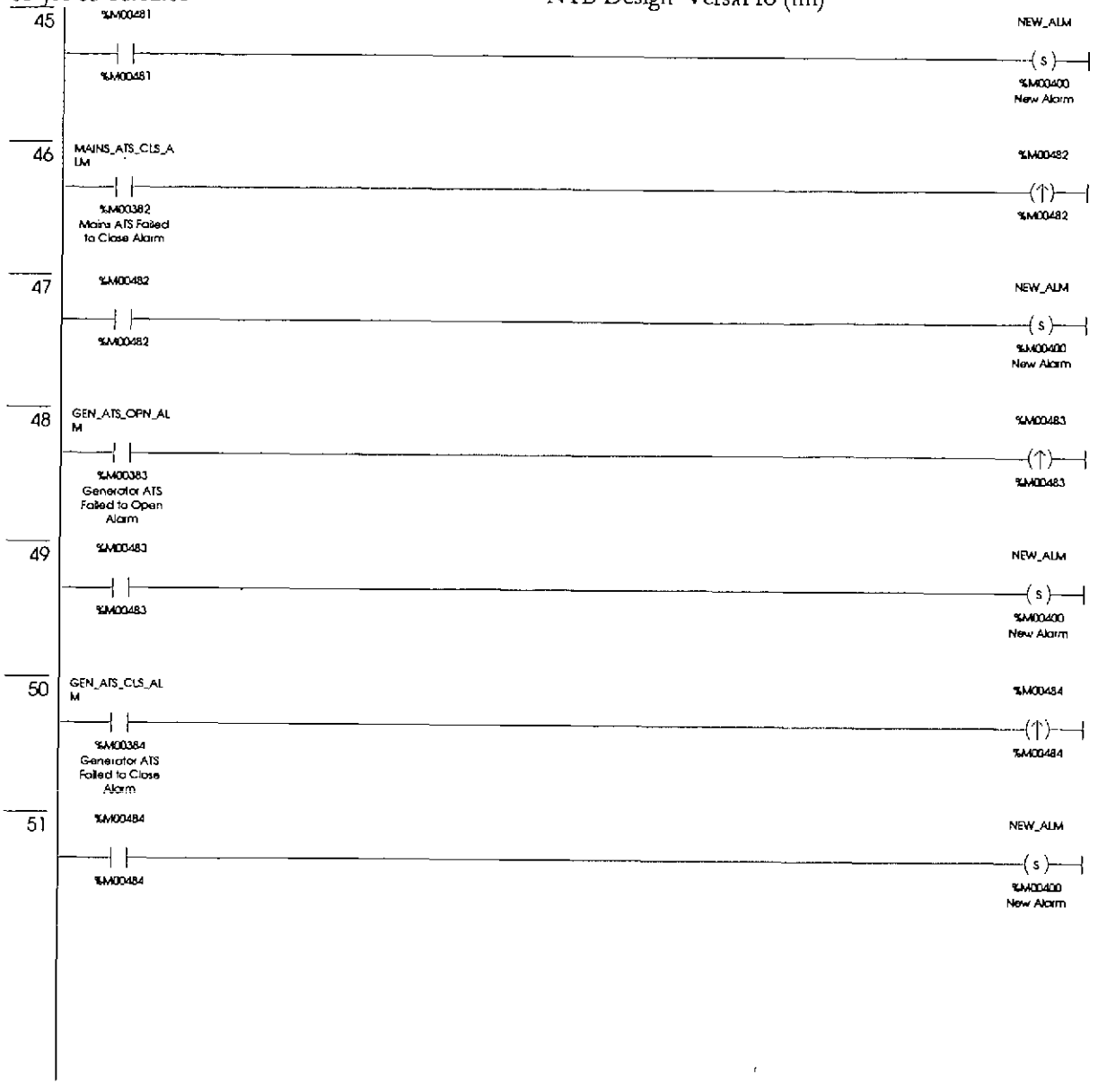
45
%M00481
%M00481
NEW_ALM
S
%M00400
New Alarm
46
MAINS_ATS_CLS_ALM
%M00382
Mains ATS Failed to Close Alarm
%M00482
%M00482
47
%M00482
%M00482
NEW_ALM
S
%M00400
New Alarm
48
GEN_ATS_OPN_ALM
%M00383
Generator ATS Failed to Open Alarm
%M00483
%M00483
49
%M00483
%M00483
NEW_ALM
S
%M00400
New Alarm
50
GEN_ATS_CLS_ALM
%M00384
Generator ATS Failed to Close Alarm
%M00484
%M00484
51
%M00484
%M00484
NEW_ALM
S
%M00400
New Alarm

Block Name:.....ALARM.blk
Description:.....Control Logic for the Generator Alarms.
Block Type:.....Ladder

1 Generator High High Alarms

2

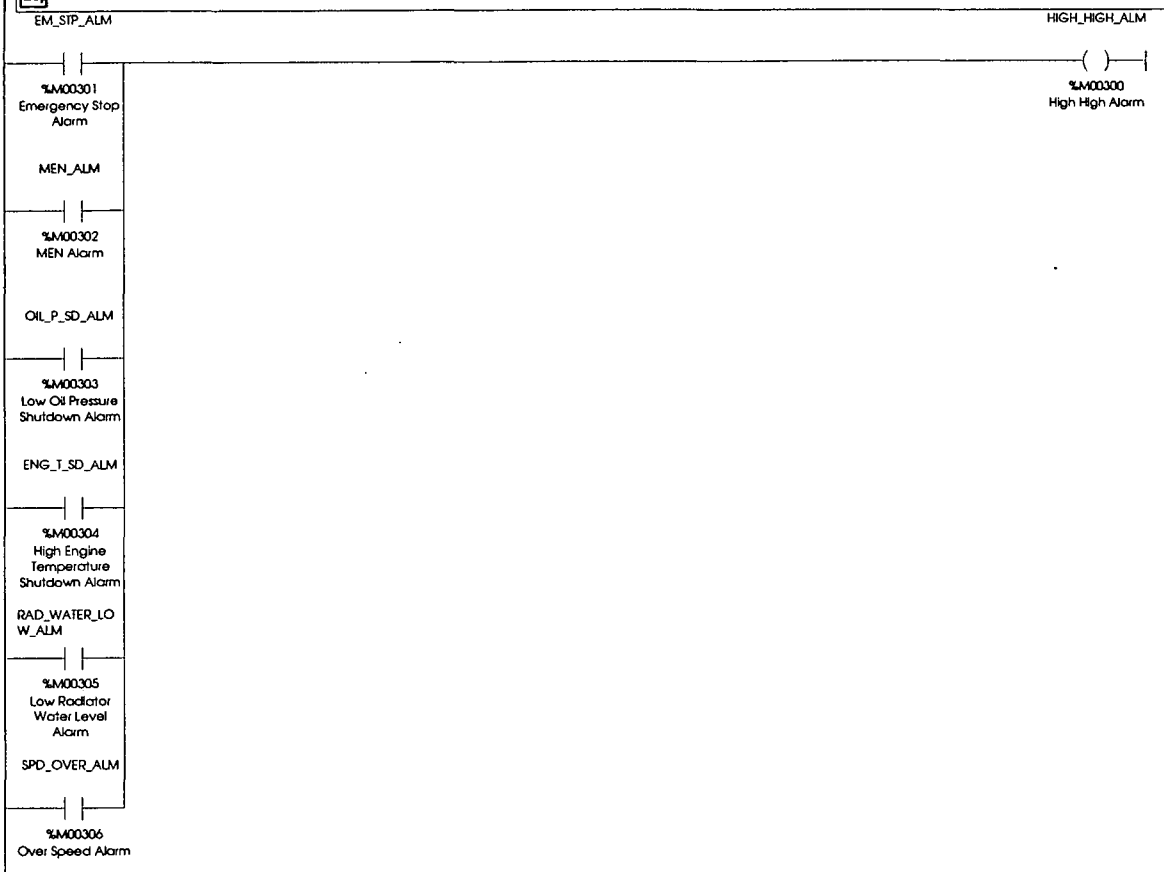

3 Generator High Alarms

4

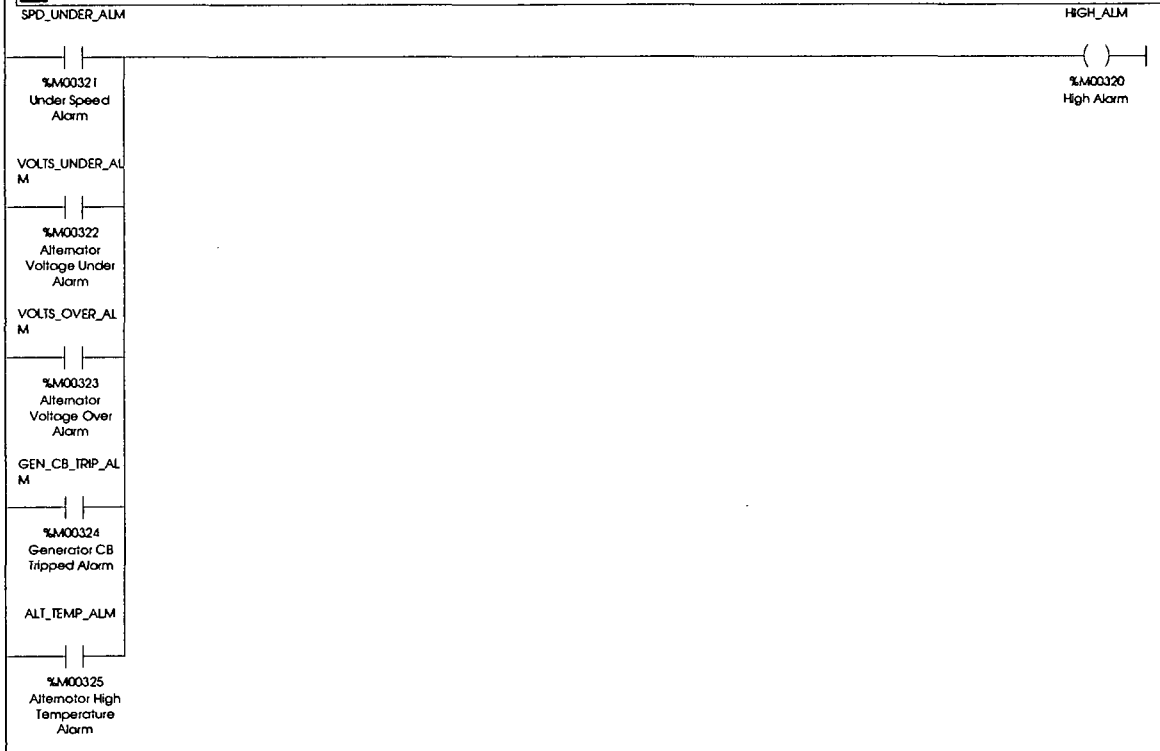

5 Generator Medium Alarms

6

FUEL_LEV_EMPTY_ALM
%M00341
Fuel Empty Alarm

MEDIUM_ALM
%M00340
Medium Alarm

FAIL_TO_STR_ALM
%M00342
Fail to Start Alarm

MAINS_ATS_OPN_ALM
%M00381
Mains ATS Failed to Open Alarm

GEN_ATS_CLS_ALM
%M00384
Generator ATS Failed to Close Alarm

7

Generator Low Alarms

8

OIL_P_W_ALM
%M00361
Low Oil Pressure Warning Alarm

LOW_ALM
%M00360
Low Alarm

ENG_T_W_ALM
%M00362
High Engine Temperature Warning Alarm

FUEL_LEV_LOW_ALM
%M00363
Low Fuel Level Alarm

BAT_CHG_AC_ALM
%M00364
Battery Charger AC Alarm

BAT_CONT_LOW_V_ALM
%M00365
Control Battery Charger Low Voltage Alarm

BAT_STR_LOW_V_ALM
%M00366
Start Battery Charger Low Voltage Alarm

MAINS_ATS_CLS_ALM
%M00382
Mains ATS Failed to Close Alarm

GEN_ATS_OPN_ALM
%M00383
Generator ATS Failed to Open Alarm

9

Generator Emergency Stop Alarm

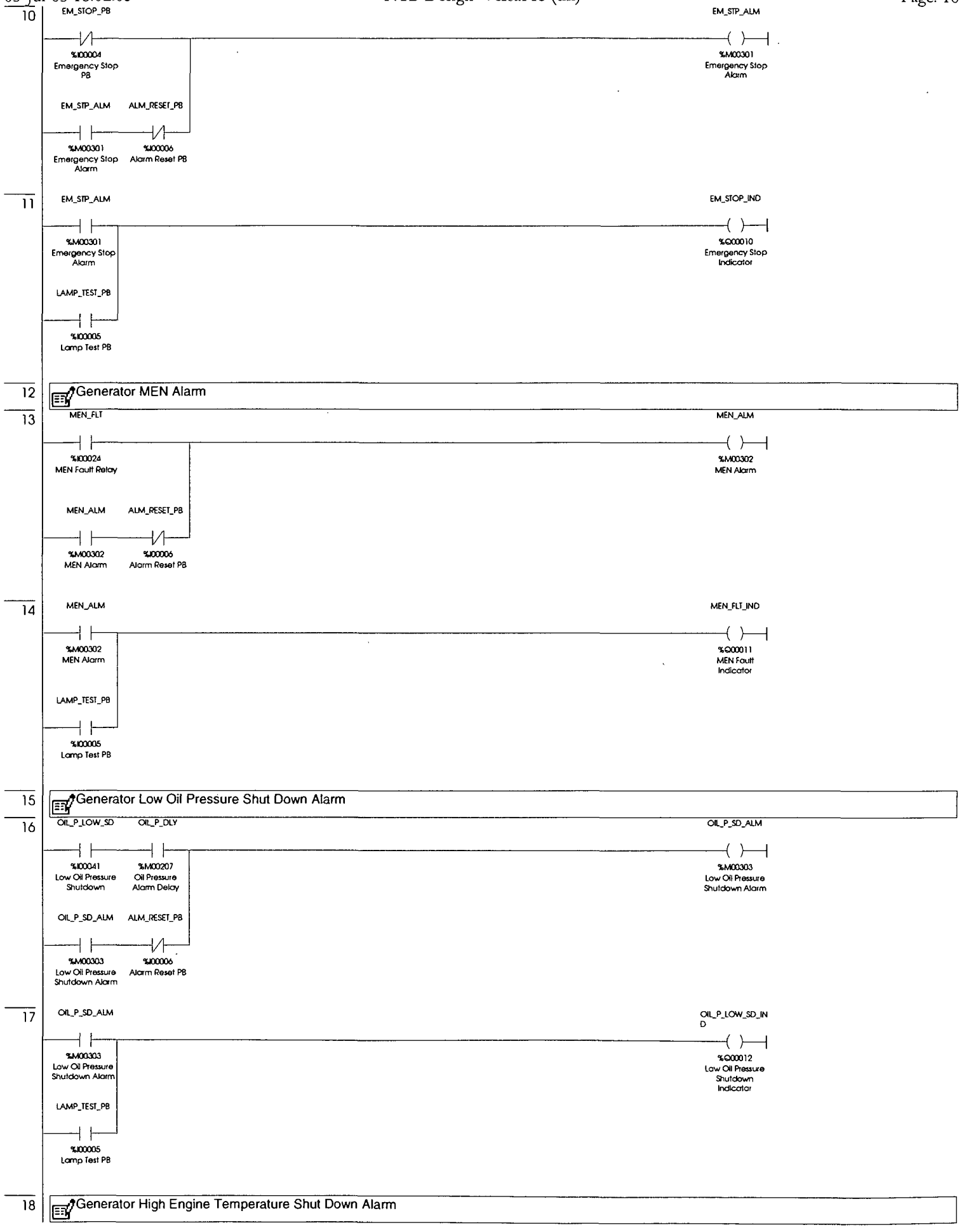
10
EM_STOP_PB
%I00004
Emergency Stop PB
EM_STP_ALM
%M00301
Emergency Stop Alarm
EM_STP_ALM
%M00301
Emergency Stop Alarm
ALM_RESET_PB
%I00006
Alarm Reset PB
11
EM_STP_ALM
%M00301
Emergency Stop Alarm
EM_STOP_IND
%Q00010
Emergency Stop Indicator
LAMP_TEST_PB
%I00005
Lamp Test PB
12
Generator MEN Alarm
13
MEN_FLT
%I00024
MEN Fault Relay
MEN_ALM
%M00302
MEN Alarm
MEN_ALM
%M00302
MEN Alarm
ALM_RESET_PB
%I00006
Alarm Reset PB
14
MEN_ALM
%M00302
MEN Alarm
MEN_FLT_IND
%Q00011
MEN Fault Indicator
LAMP_TEST_PB
%I00005
Lamp Test PB
15
Generator Low Oil Pressure Shut Down Alarm
16
OIL_P_LOW_SD
%I00041
Low Oil Pressure Shutdown
OIL_P_DLY
%M00207
Oil Pressure Alarm Delay
OIL_P_SD_ALM
%M00303
Low Oil Pressure Shutdown Alarm
OIL_P_SD_ALM
%M00303
Low Oil Pressure Shutdown Alarm
ALM_RESET_PB
%I00006
Alarm Reset PB
17
OIL_P_SD_ALM
%M00303
Low Oil Pressure Shutdown Alarm
OIL_P_LOW_SD_IND
%Q00012
Low Oil Pressure Shutdown Indicator
LAMP_TEST_PB
%I00005
Lamp Test PB
18
Generator High Engine Temperature Shut Down Alarm

19
ENG_T_HI_SD
%I00043
High Engine Temperature Shutdown
STR_UP_DLY
%M00208
Startup Alarm Delay
ENG_T_SD_ALM
%M00304
High Engine Temperature Shutdown Alarm
ENG_T_SD_ALM
%M00304
High Engine Temperature Shutdown Alarm
ALM_RESET_PB
%I00006
Alarm Reset PB

20
ENG_T_SD_ALM
%M00304
High Engine Temperature Shutdown Alarm
LAMP_TEST_PB
%I00005
Lamp Test PB
ENG_T_HI_SD_IND
%Q00014
High Engine Temperature Shutdown Indicator

21 Generator Low Radiator Water Level Alarm

22
RAD_WATER_LOW
%I00045
Low Radiator Water Level
TMR TENTHS
%R00300
50 PV
%R00300
RAD_WATER_LOW_DLY
%M00315
Radiator Water Level Low Delay

23
RAD_WATER_LOW_DLY
%M00315
Radiator Water Level Low Delay
RAD_WATER_LOW_ALM
%M00305
Low Radiator Water Level Alarm
RAD_WATER_LOW_ALM
%M00305
Low Radiator Water Level Alarm
ALM_RESET_PB
%I00006
Alarm Reset PB

24
RAD_WATER_LOW_ALM
%M00305
Low Radiator Water Level Alarm
LAMP_TEST_PB
%I00005
Lamp Test PB
RAD_WATER_LOW_IND
%Q00016
Low Radiator Water Level Indicator

25 Generator Over Speed Alarm

26
GCR
%Q00041
Governor Control Relay
TMR TENTHS
%R00339
50 PV
%R00339
SPD_OVER_DLY
%M00316
Over Speed Delay Timer

27

SPD_OVER %I00019 Over Speed Relay
SPD_OVER_DLY %M00316 Over Speed Delay Timer
SPD_OVER_ALM %M00306 Over Speed Alarm
SPD_OVER_ALM %M00306 Over Speed Alarm
ALM_RESET_PB %I00006 Alarm Reset PB

28

SPD_OVER_ALM %M00306 Over Speed Alarm
LAMP_TEST_PB %I00005 Lamp Test PB
SPD_OVER_IND %Q00019 Over Speed Indicator

29

Generator Under Speed Alarm

30

SPD_UNDER %I00018 Under Speed Relay
STR_UP_DLY %M00208 Startup Alarm Delay
TMR TENTHS %R00303
50 PV %R00303
SPD_UNDER_DLY %M00331 Under Speed Alarm Delay

31

SPD_UNDER_DLY %M00331 Under Speed Alarm Delay
SPD_UNDER_ALM %M00321 Under Speed Alarm
ALM_RESET_PB %I00006 Alarm Reset PB
SPD_UNDER_ALM %M00321 Under Speed Alarm

32

SPD_UNDER_ALM %M00321 Under Speed Alarm
LAMP_TEST_PB %I00005 Lamp Test PB
SPD_UNDER_IND %Q00020 Under Speed Indicator

33

Generator Under Voltage Alarm

34

VOLTS_UNDER %I00020 Under Voltage Relay
STR_UP_DLY %M00208 Startup Alarm Delay
TMR TENTHS %R00306
50 PV %R00306
VOLTS_UNDER_D... %M00332 Under Voltage Alarm Delay

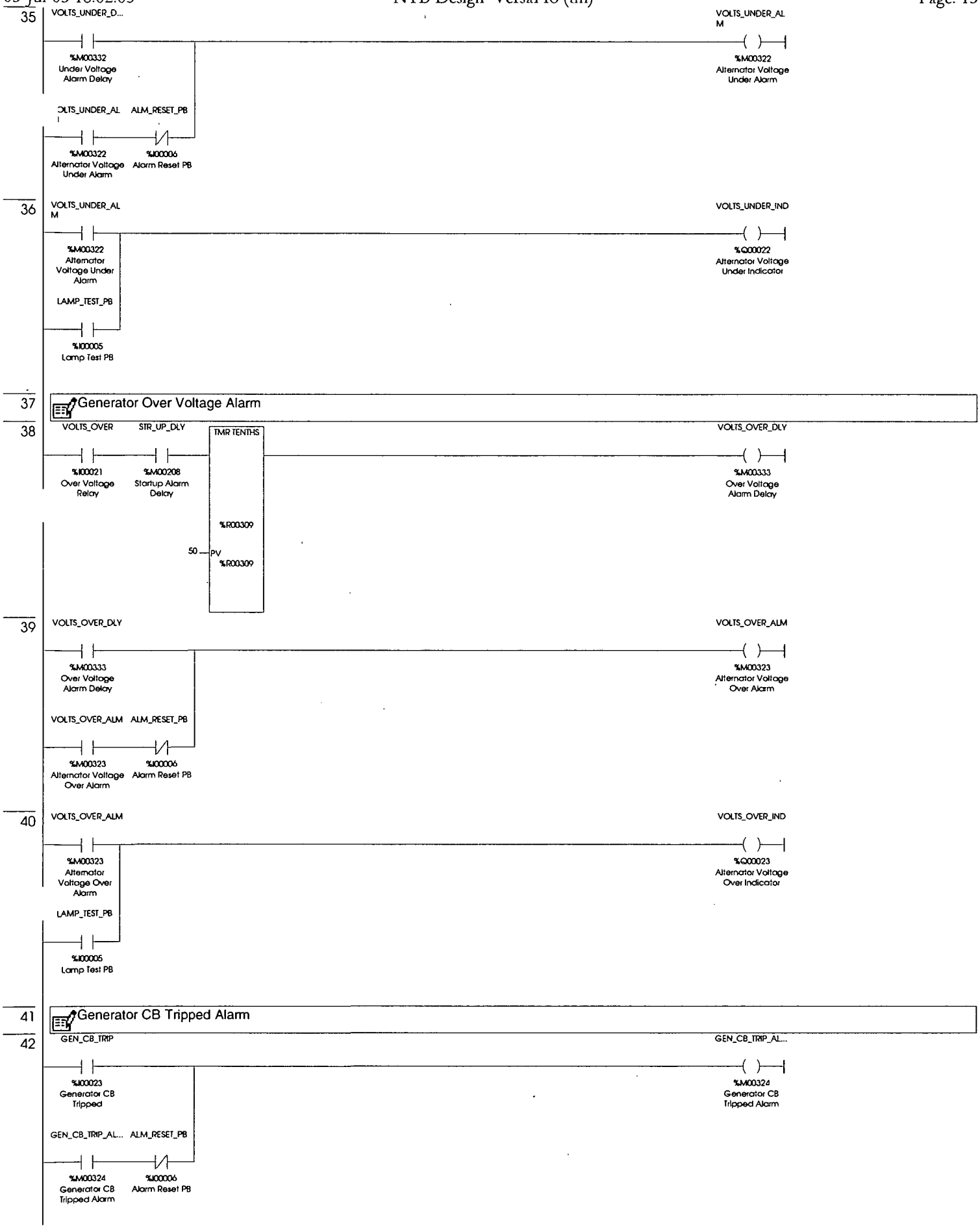
35
VOLTS_UNDER_D...
%M00332
Under Voltage Alarm Delay
VOLTS_UNDER_AL M
%M00322
Alternator Voltage Under Alarm
OLTS_UNDER_AL
ALM_RESET_PB
%M00322
Alternator Voltage Under Alarm
%I00006
Alarm Reset PB
36
VOLTS_UNDER_AL M
VOLTS_UNDER_IND
%M00322
Alternator Voltage Under Alarm
%Q00022
Alternator Voltage Under Indicator
LAMP_TEST_PB
%I00005
Lamp Test PB
37
Generator Over Voltage Alarm
38
VOLTS_OVER
STR_UP_DLY
TMR TENTHS
VOLTS_OVER_DLY
%I00021
Over Voltage Relay
%M00208
Startup Alarm Delay
%R00309
50
PV
%R00309
%M00333
Over Voltage Alarm Delay
39
VOLTS_OVER_DLY
VOLTS_OVER_ALM
%M00333
Over Voltage Alarm Delay
%M00323
Alternator Voltage Over Alarm
VOLTS_OVER_ALM
ALM_RESET_PB
%M00323
Alternator Voltage Over Alarm
%I00006
Alarm Reset PB
40
VOLTS_OVER_ALM
VOLTS_OVER_IND
%M00323
Alternator Voltage Over Alarm
%Q00023
Alternator Voltage Over Indicator
LAMP_TEST_PB
%I00005
Lamp Test PB
41
Generator CB Tripped Alarm
42
GEN_CB_TRIP
GEN_CB_TRIP_AL...
%I00023
Generator CB Tripped
%M00324
Generator CB Tripped Alarm
GEN_CB_TRIP_AL...
ALM_RESET_PB
%M00324
Generator CB Tripped Alarm
%I00006
Alarm Reset PB

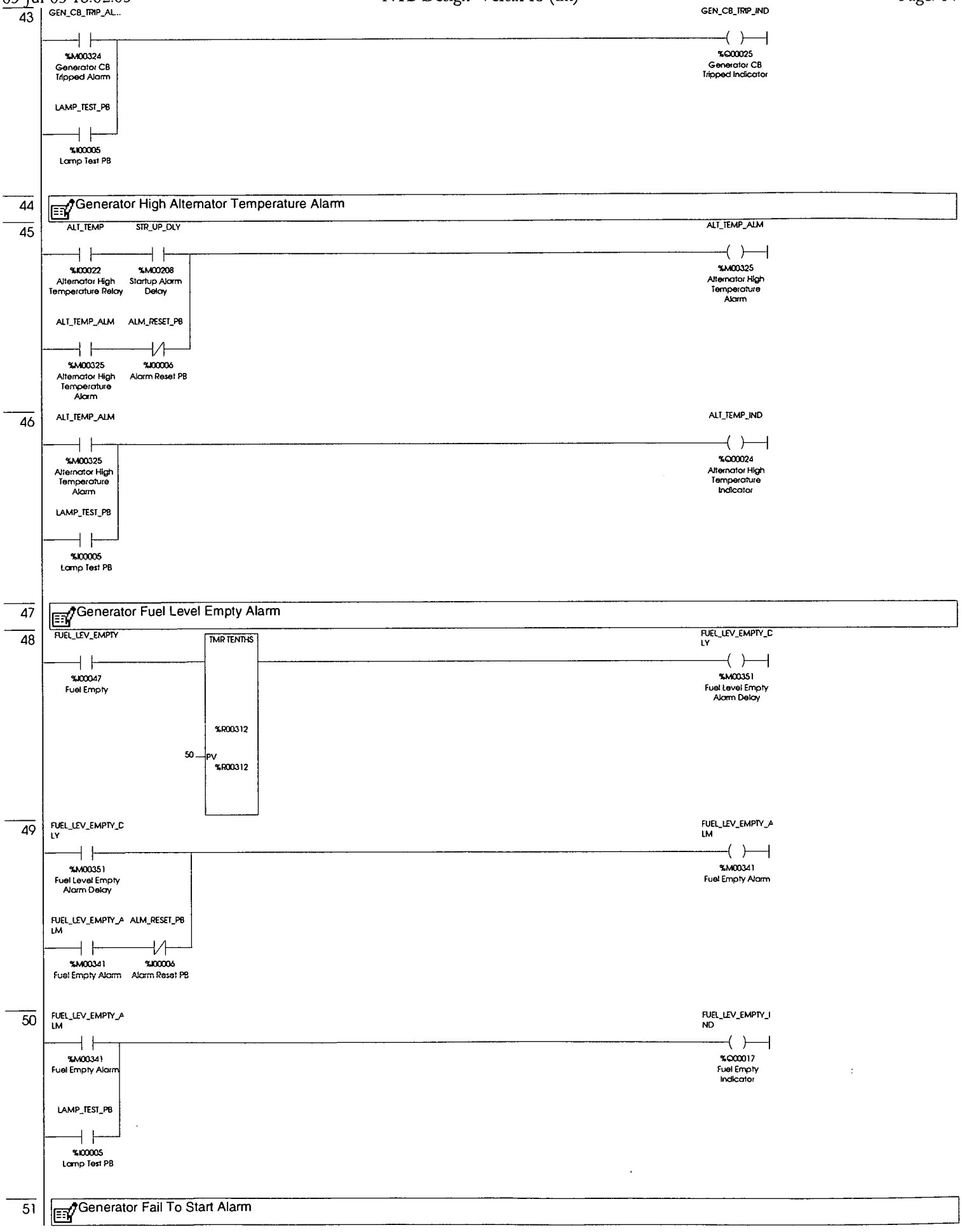
43
GEN_CB_TRIP_AL...
%M00324
Generator CB
Tripped Alarm
LAMP_TEST_PB
%I00005
Lamp Test PB
GEN_CB_TRIP_IND
%Q00025
Generator CB
Tripped Indicator
44
Generator High Alternator Temperature Alarm
45
ALT_TEMP
%I00022
Alternator High
Temperature Relay
STR_UP_DLY
%M00208
Startup Alarm
Delay
ALT_TEMP_ALM
%M00325
Alternator High
Temperature
Alarm
ALM_RESET_PB
%I00006
Alarm Reset PB
ALT_TEMP_ALM
%M00325
Alternator High
Temperature
Alarm
46
ALT_TEMP_ALM
%M00325
Alternator High
Temperature
Alarm
LAMP_TEST_PB
%I00005
Lamp Test PB
ALT_TEMP_IND
%Q00024
Alternator High
Temperature
Indicator
47
Generator Fuel Level Empty Alarm
48
FUEL_LEV_EMPTY
%I00047
Fuel Empty
TMR TENTHS
%R00312
50
PV
%R00312
FUEL_LEV_EMPTY_C
LY
%M00351
Fuel Level Empty
Alarm Delay
49
FUEL_LEV_EMPTY_C
LY
%M00351
Fuel Level Empty
Alarm Delay
FUEL_LEV_EMPTY_A
LM
%M00341
Fuel Empty Alarm
ALM_RESET_PB
%I00006
Alarm Reset PB
FUEL_LEV_EMPTY_A
LM
%M00341
Fuel Empty Alarm
50
FUEL_LEV_EMPTY_A
LM
%M00341
Fuel Empty Alarm
LAMP_TEST_PB
%I00005
Lamp Test PB
FUEL_LEV_EMPTY_I
ND
%Q00017
Fuel Empty
Indicator
51
Generator Fail To Start Alarm

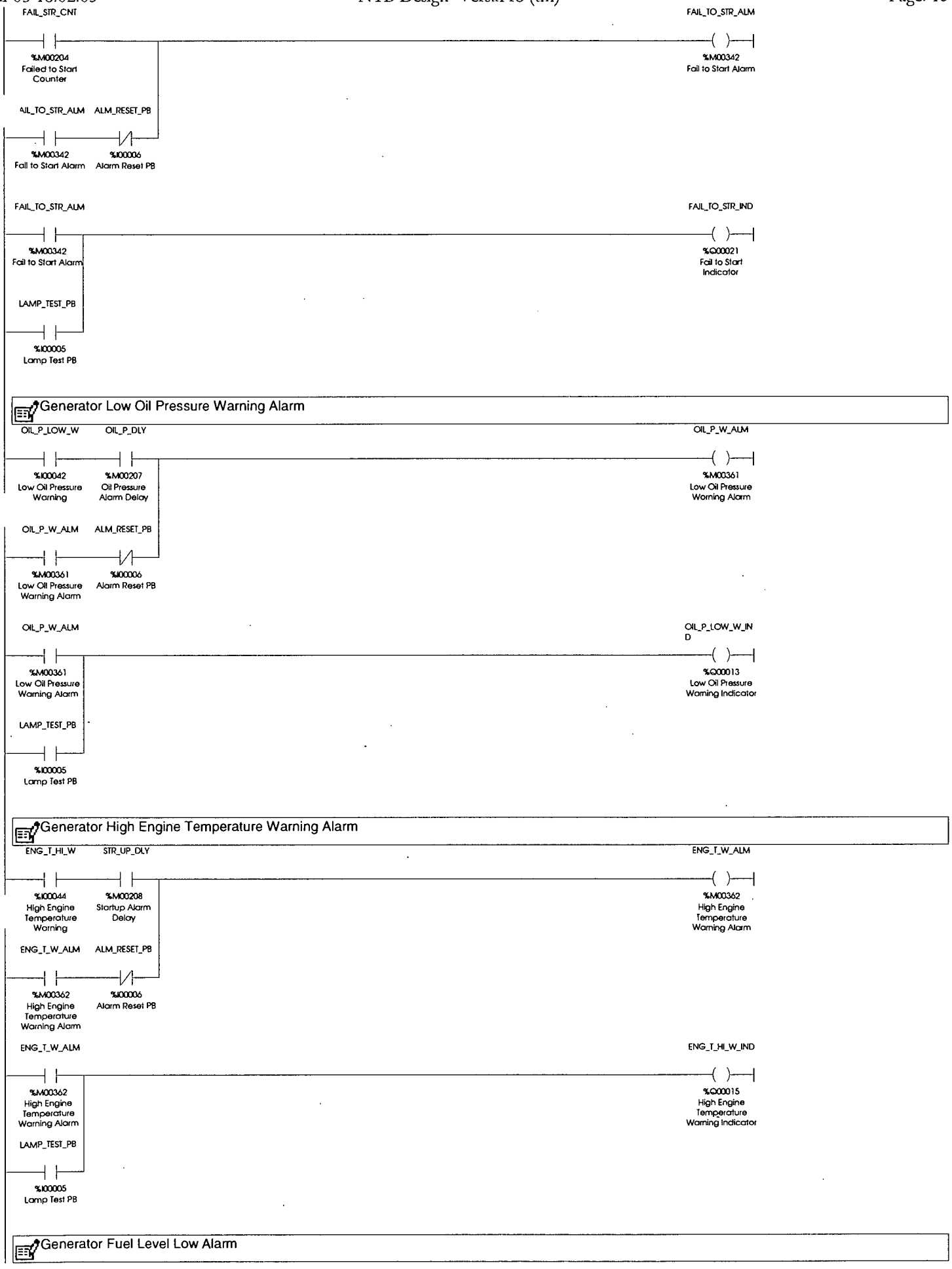
52
FAIL_STR_CNT
%M00204
Failed to Start Counter
FAIL_TO_STR_ALM
%M00342
Fail to Start Alarm
AIL_TO_STR_ALM
ALM_RESET_PB
%M00342
Fail to Start Alarm
%I00006
Alarm Reset PB
53
FAIL_TO_STR_ALM
%M00342
Fail to Start Alarm
FAIL_TO_STR_IND
%Q00021
Fail to Start Indicator
LAMP_TEST_PB
%I00005
Lamp Test PB
54
Generator Low Oil Pressure Warning Alarm
55
OIL_P_LOW_W
OIL_P_DLY
%I00042
Low Oil Pressure Warning
%M00207
Oil Pressure Alarm Delay
OIL_P_W_ALM
%M00361
Low Oil Pressure Warning Alarm
OIL_P_W_ALM
ALM_RESET_PB
%M00361
Low Oil Pressure Warning Alarm
%I00006
Alarm Reset PB
56
OIL_P_W_ALM
%M00361
Low Oil Pressure Warning Alarm
OIL_P_LOW_W_IND
%Q00013
Low Oil Pressure Warning Indicator
LAMP_TEST_PB
%I00005
Lamp Test PB
57
Generator High Engine Temperature Warning Alarm
58
ENG_T_HI_W
STR_UP_DLY
%I00044
High Engine Temperature Warning
%M00208
Startup Alarm Delay
ENG_T_W_ALM
%M00362
High Engine Temperature Warning Alarm
ENG_T_W_ALM
ALM_RESET_PB
%M00362
High Engine Temperature Warning Alarm
%I00006
Alarm Reset PB
59
ENG_T_W_ALM
%M00362
High Engine Temperature Warning Alarm
ENG_T_HI_W_IND
%Q00015
High Engine Temperature Warning Indicator
LAMP_TEST_PB
%I00005
Lamp Test PB
60
Generator Fuel Level Low Alarm

61
FUEL_LEV_LOW
%I00046
Low Fuel Level
TMR TENTHS
%R00315
50 PV
%R00315
FUEL_LEV_LOW_DLY
%M00373
Fuel Level Low Alarm Delay

62
FUEL_LEV_LOW_DLY
%M00373
Fuel Level Low Alarm Delay
FUEL_LEV_LOW_ALM
%M00363
Low Fuel Level Alarm
FUEL_LEV_LOW_ALM
%M00363
Low Fuel Level Alarm
ALM_RESET_PB
%I00006
Alarm Reset PB

63
FUEL_LEV_LOW_ALM
%M00363
Low Fuel Level Alarm
FUEL_LEV_LOW_IND
%Q00018
Low Fuel Level Indicator
LAMP_TEST_PB
%I00005
Lamp Test PB

64
Generator Battery Charger AC Fail Alarm

65
BAT_CHG_AC
%I00025
Battery Charger AC Relay
TMR TENTHS
%R00318
600 PV
%R00318
BAT_CHG_AC_DLY
%M00374
Battery Charger AC Failure Delay

66
BAT_CHG_AC_DLY
%M00374
Battery Charger AC Failure Delay
BAT_CHG_AC_ALM
%M00364
Battery Charger AC Alarm
BAT_CHG_AC_ALM
%M00364
Battery Charger AC Alarm
ALM_RESET_PB
%I00006
Alarm Reset PB

67
BAT_CHG_AC_ALM
%M00364
Battery Charger AC Alarm
BAT_CHG_AC_IND
%Q00026
Battery Charger AC Indicator
LAMP_TEST_PB
%I00005
Lamp Test PB

68
Generator Control Battery Low Voltage Alarm

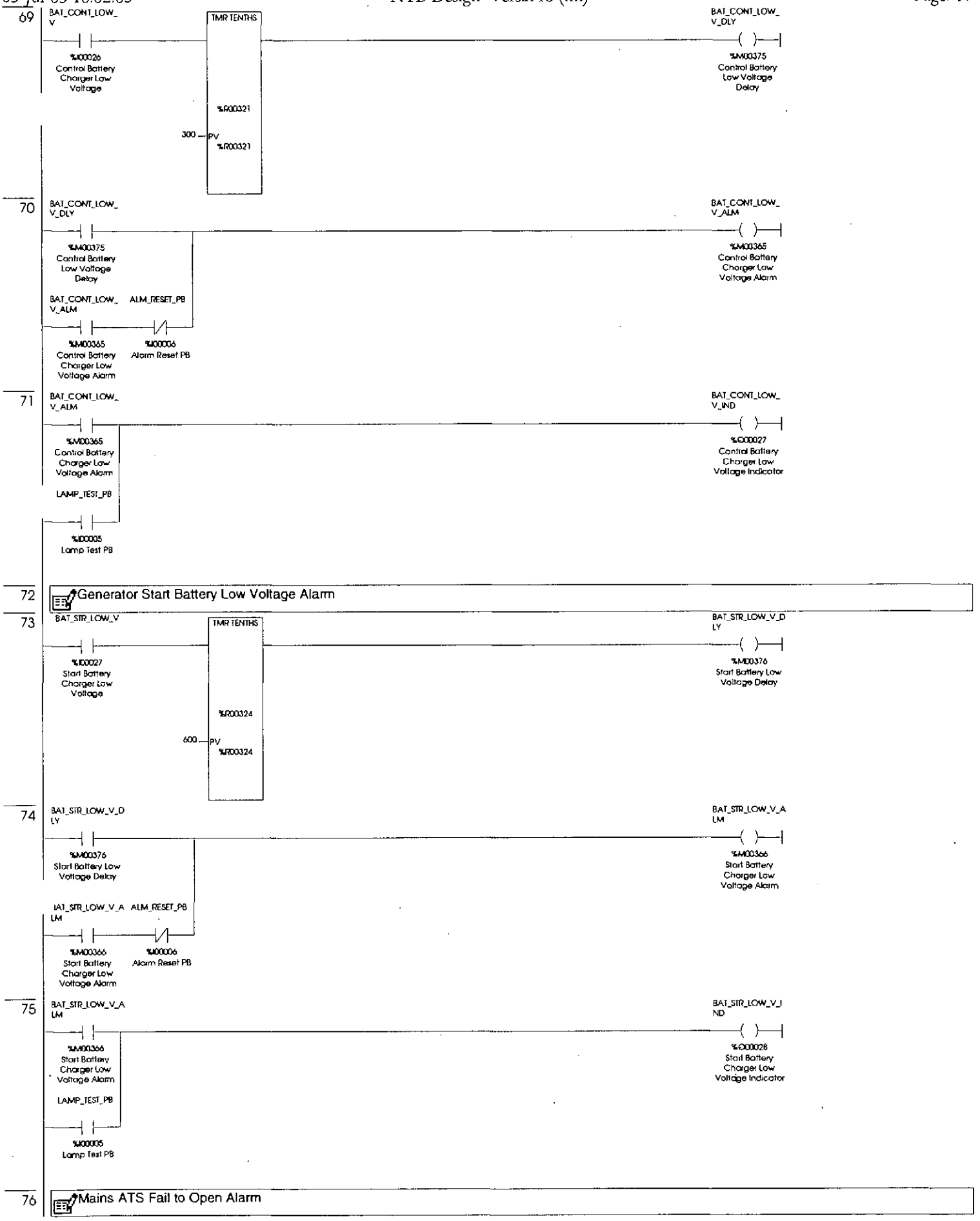
69
BAT_CONT_LOW_V
%I00026
Control Battery Charger Low Voltage
TMR TENTHS
%R00321
300
PV
%R00321
BAT_CONT_LOW_V_DLY
%M00375
Control Battery Low Voltage Delay
70
BAT_CONT_LOW_V_DLY
%M00375
Control Battery Low Voltage Delay
BAT_CONT_LOW_V_ALM
%M00365
Control Battery Charger Low Voltage Alarm
ALM_RESET_PB
%I00006
Alarm Reset PB
71
BAT_CONT_LOW_V_ALM
%M00365
Control Battery Charger Low Voltage Alarm
LAMP_TEST_PB
%I00005
Lamp Test PB
BAT_CONT_LOW_V_IND
%Q00027
Control Battery Charger Low Voltage Indicator
72
Generator Start Battery Low Voltage Alarm
73
BAT_STR_LOW_V
%I00027
Start Battery Charger Low Voltage
TMR TENTHS
%R00324
600
PV
%R00324
BAT_STR_LOW_V_DLY
%M00376
Start Battery Low Voltage Delay
74
BAT_STR_LOW_V_DLY
%M00376
Start Battery Low Voltage Delay
BAT_STR_LOW_V_ALM
%M00366
Start Battery Charger Low Voltage Alarm
ALM_RESET_PB
%I00006
Alarm Reset PB
75
BAT_STR_LOW_V_ALM
%M00366
Start Battery Charger Low Voltage Alarm
LAMP_TEST_PB
%I00005
Lamp Test PB
BAT_STR_LOW_V_IND
%Q00028
Start Battery Charger Low Voltage Indicator
76
Mains ATS Fail to Open Alarm

77

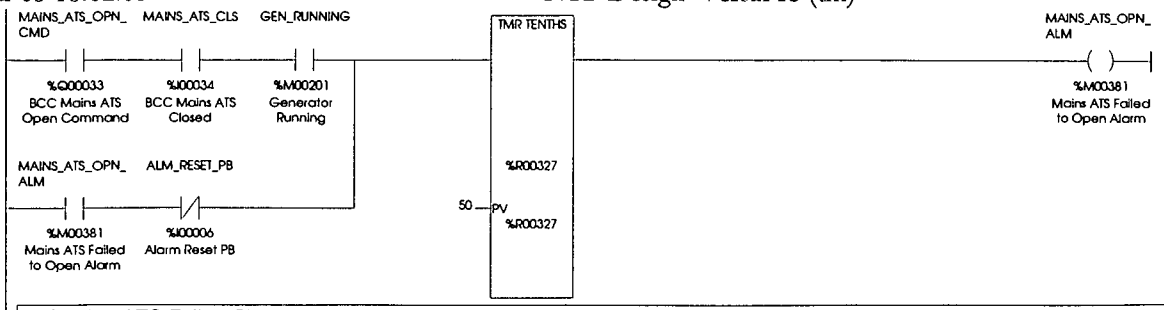

78 Mains ATS Fail to Close Alarm

79

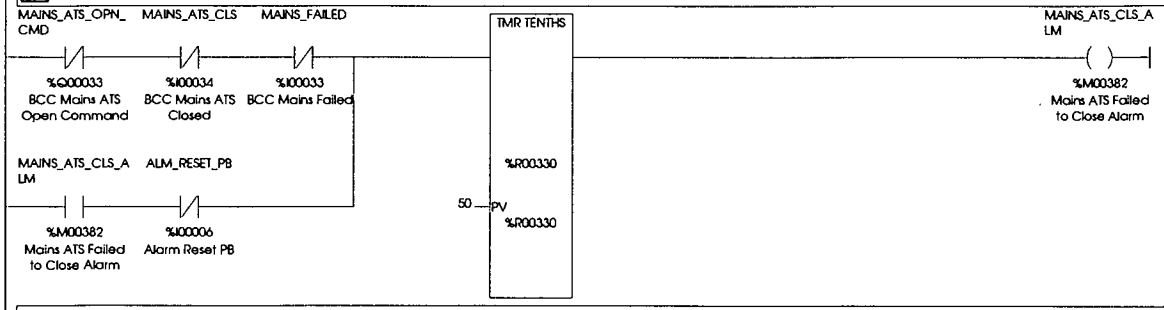

80 Generator ATS Fail to Open Alarm

81

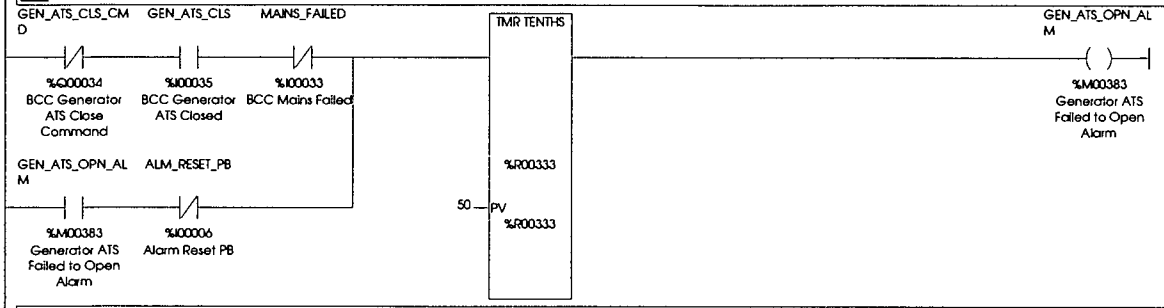

82 Generator ATS Fail to Close Alarm

83

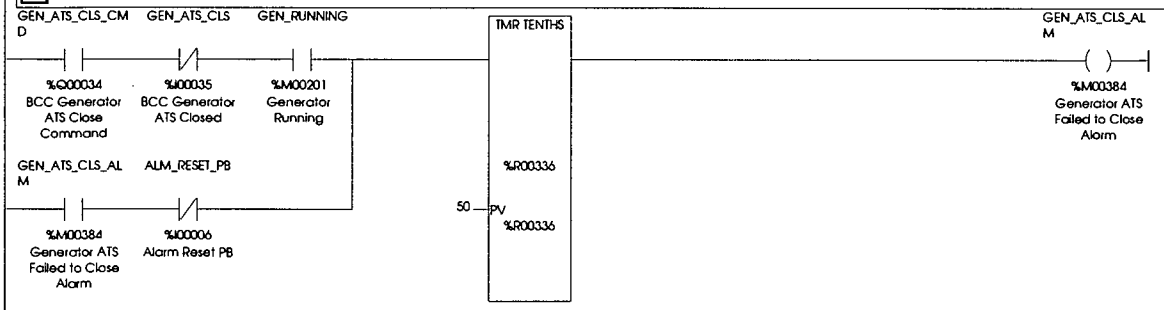

Block Name:.....SEQ.blk
Description:.....Control Logic for the Generator Operation Sequences.
Block Type:.....Ladder

1 Generator OFF State

2
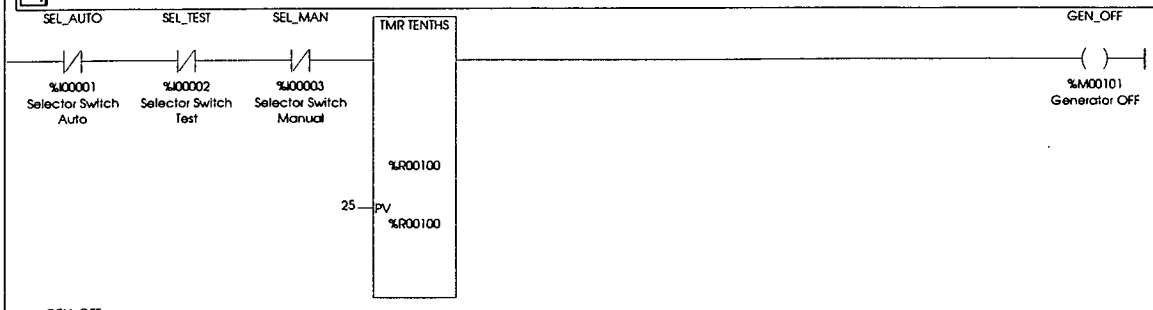

3
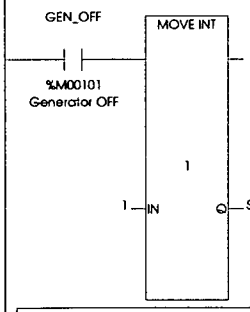

4 Generator Automatic Start and Stop Logic

5
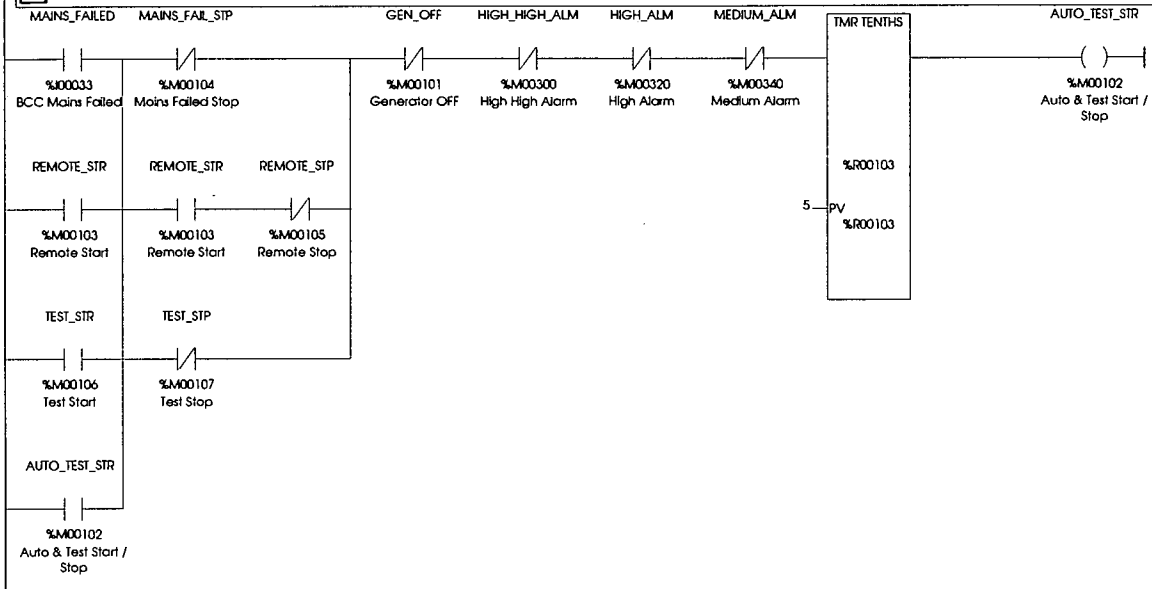

6
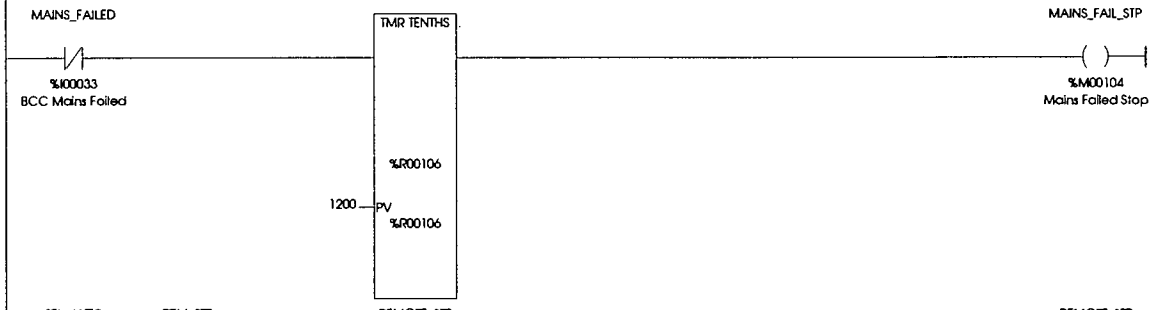

7
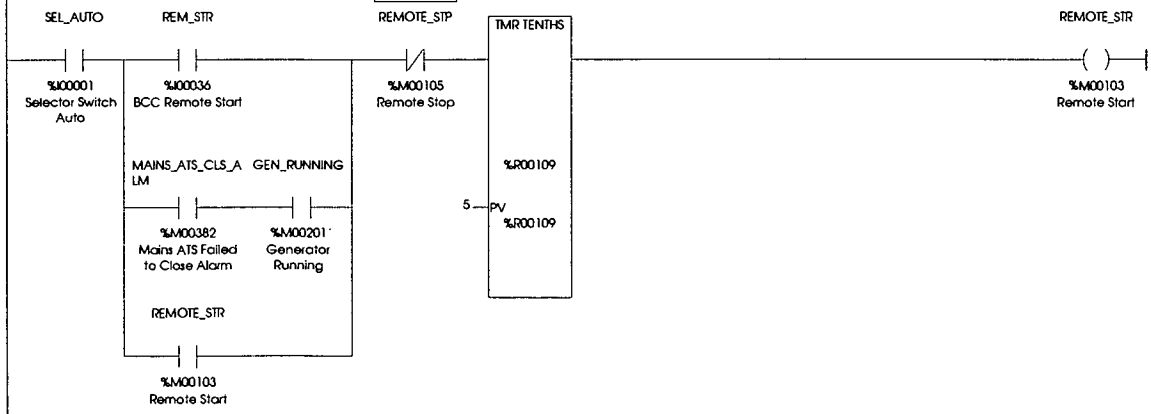

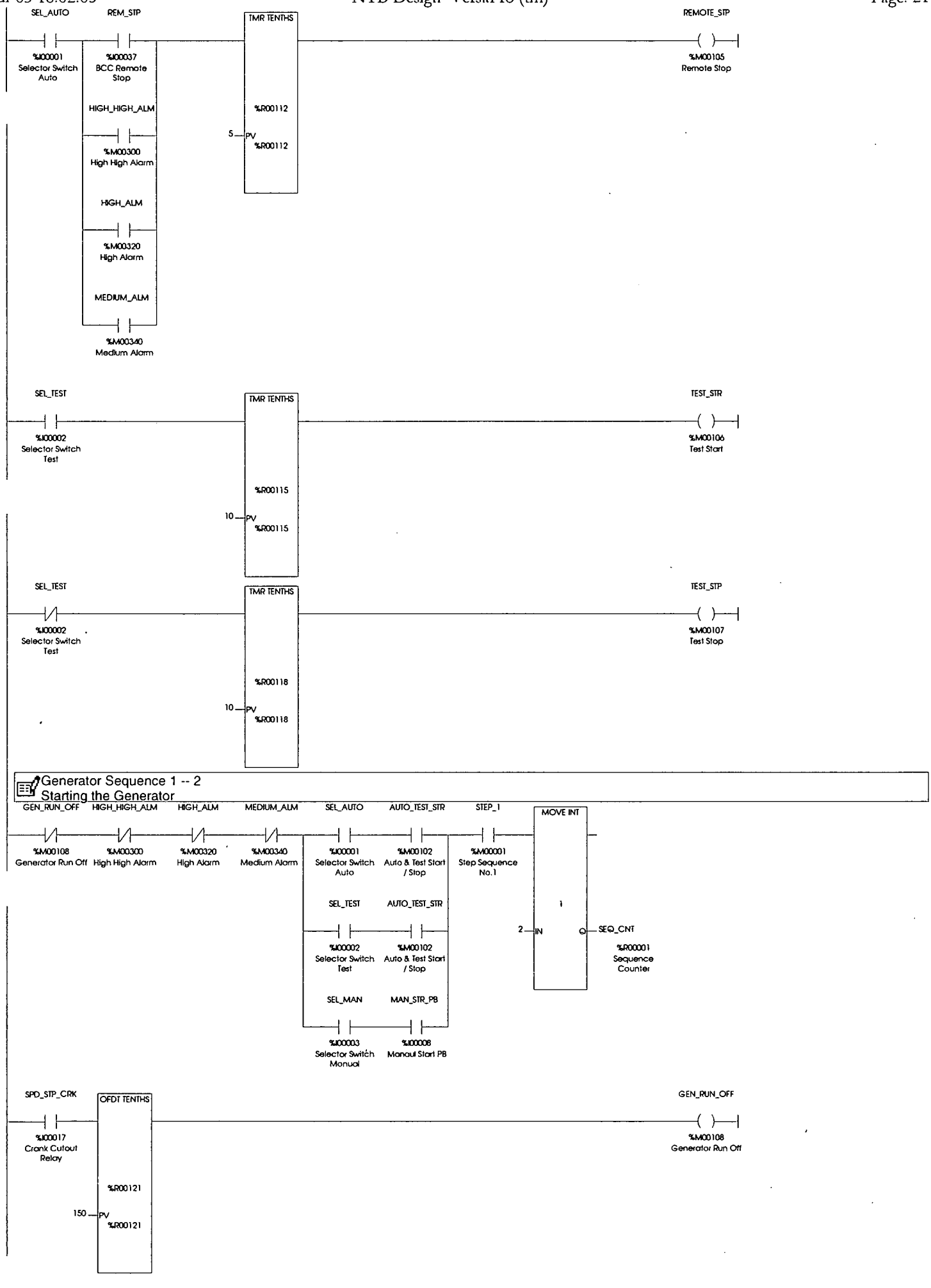
8
SEL_AUTO
%I00001
Selector Switch
Auto
REM_STP
%I00037
BCC Remote
Stop
HIGH_HIGH_ALM
%M00300
High High Alarm
HIGH_ALM
%M00320
High Alarm
MEDIUM_ALM
%M00340
Medium Alarm
TMR TENTHS
%R00112
5
PV
%R00112
REMOTE_STP
%M00105
Remote Stop
9
SEL_TEST
%I00002
Selector Switch
Test
TMR TENTHS
%R00115
10
PV
%R00115
TEST_STR
%M00106
Test Start
10
SEL_TEST
%I00002
Selector Switch
Test
TMR TENTHS
%R00118
10
PV
%R00118
TEST_STP
%M00107
Test Stop
11
Generator Sequence 1 -- 2
Starting the Generator
12
GEN_RUN_OFF
%M00108
Generator Run Off
HIGH_HIGH_ALM
%M00300
High High Alarm
HIGH_ALM
%M00320
High Alarm
MEDIUM_ALM
%M00340
Medium Alarm
SEL_AUTO
%I00001
Selector Switch
Auto
AUTO_TEST_STR
%M00102
Auto & Test Start
/ Stop
STEP_1
%M00001
Step Sequence
No.1
SEL_TEST
%I00002
Selector Switch
Test
AUTO_TEST_STR
%M00102
Auto & Test Start
/ Stop
SEL_MAN
%I00003
Selector Switch
Manual
MAN_STR_PB
%I00008
Manual Start PB
MOVE INT
1
2
IN
Q
SEQ_CNT
%R00001
Sequence
Counter
13
SPD_STP_CRK
%I00017
Crank Cutout
Relay
OFDT TENTHS
%R00121
150
PV
%R00121
GEN_RUN_OFF
%M00108
Generator Run Off

14

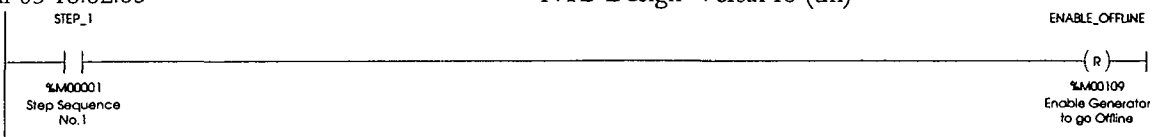

15

Generator Sequence 2 -- 3
Generator Running at Rated Speed
Generator Warmup Time

16

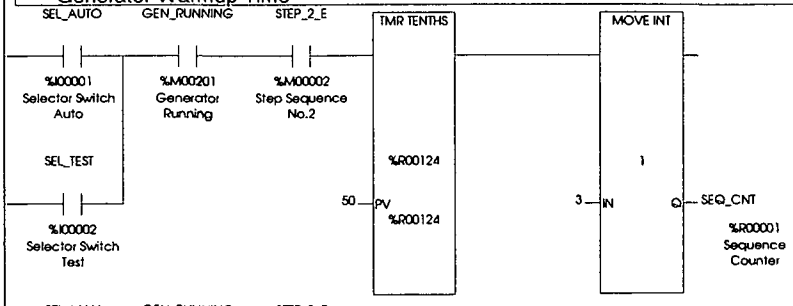

17

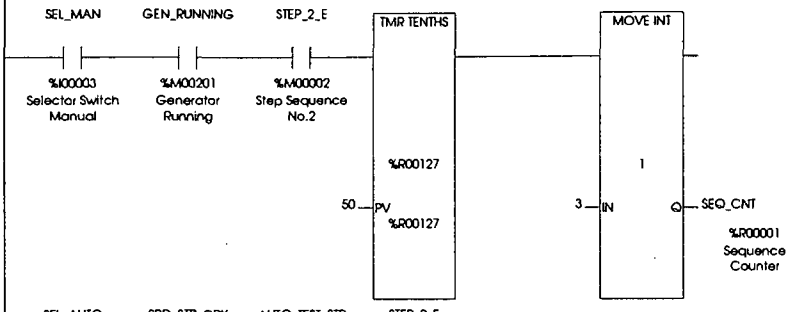

18

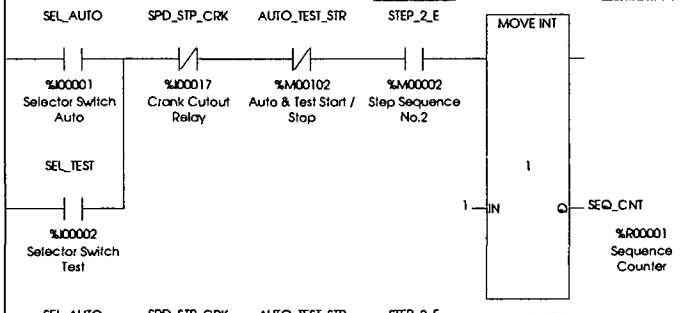

19

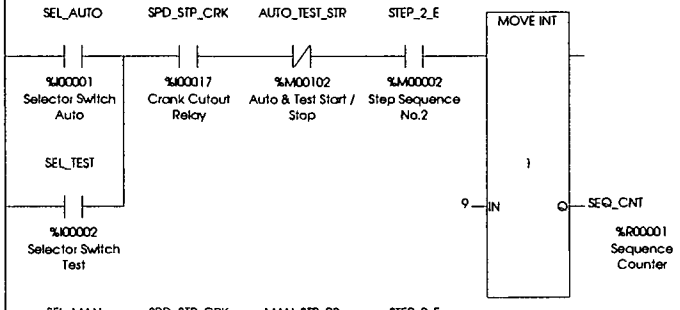

20

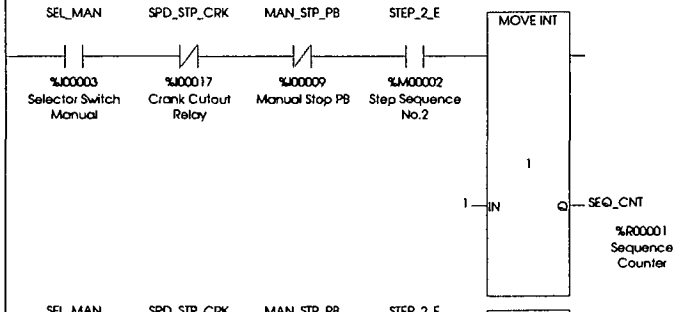

21

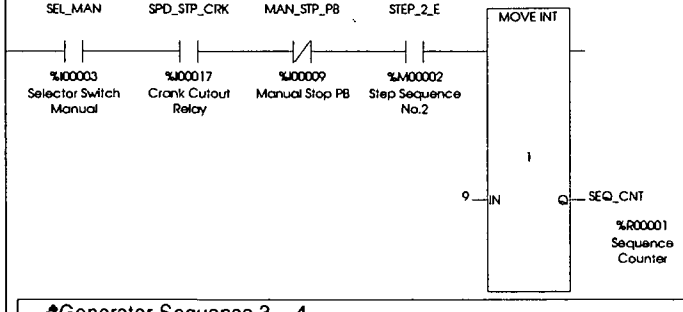

22

Generator Sequence 3 -- 4
Generator Running at Rated Speed
Transfer to Generator ATS

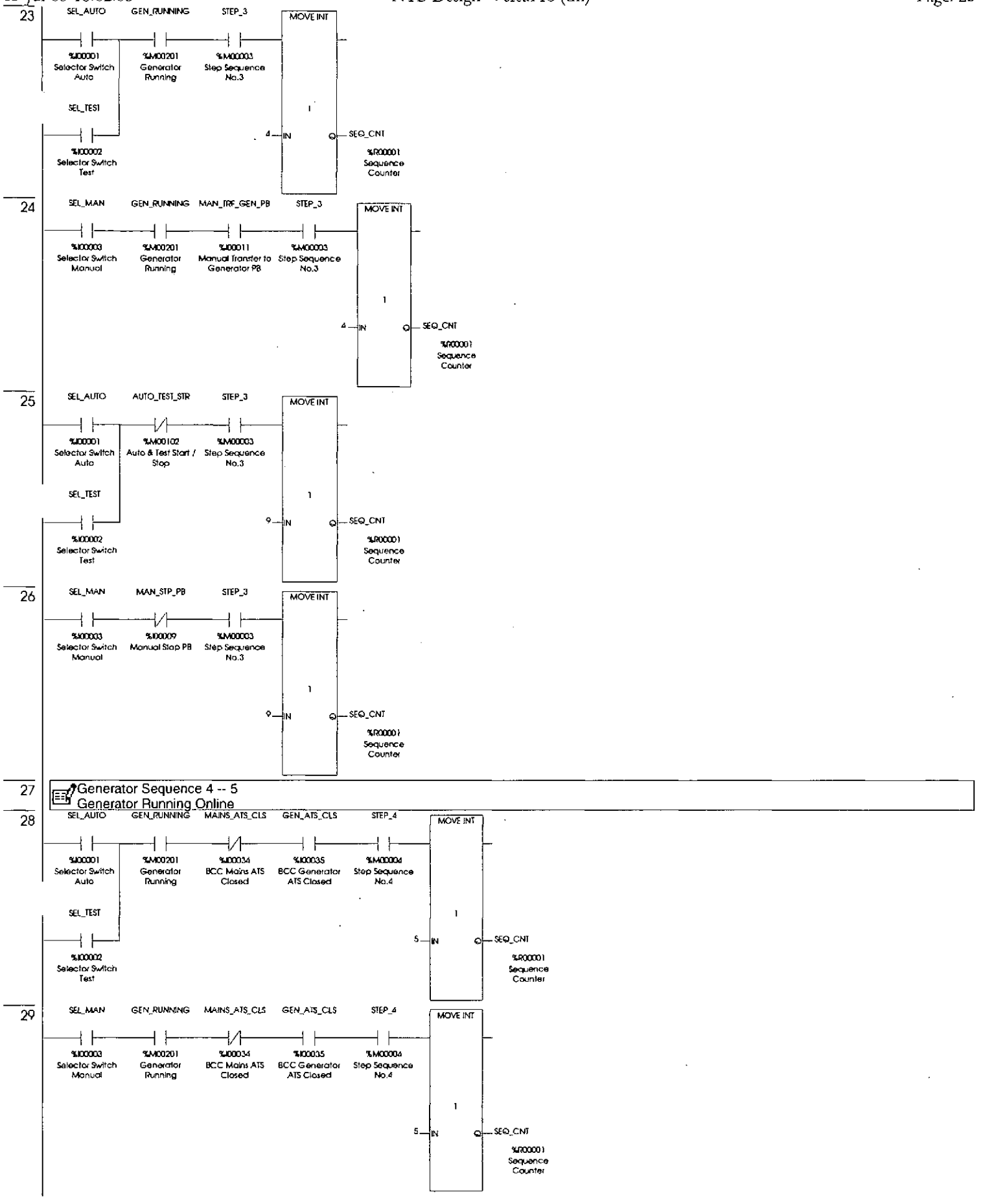
23
SEL_AUTO
GEN_RUNNING
STEP_3
MOVE INT
%I00001 Selector Switch Auto
%M00201 Generator Running
%M00003 Step Sequence No.3
SEL_TEST
%I00002 Selector Switch Test
1
4 IN
SEQ_CNT
%R00001 Sequence Counter
24
SEL_MAN
GEN_RUNNING
MAN_TRF_GEN_PB
STEP_3
MOVE INT
%I00003 Selector Switch Manual
%M00201 Generator Running
%I00011 Manual Transfer to Generator PB
%M00003 Step Sequence No.3
1
4 IN
SEQ_CNT
%R00001 Sequence Counter
25
SEL_AUTO
AUTO_TEST_STR
STEP_3
MOVE INT
%I00001 Selector Switch Auto
%M00102 Auto & Test Start / Stop
%M00003 Step Sequence No.3
SEL_TEST
%I00002 Selector Switch Test
1
9 IN
SEQ_CNT
%R00001 Sequence Counter
26
SEL_MAN
MAN_STP_PB
STEP_3
MOVE INT
%I00003 Selector Switch Manual
%I00009 Manual Stop PB
%M00003 Step Sequence No.3
1
9 IN
SEQ_CNT
%R00001 Sequence Counter
27
Generator Sequence 4 -- 5
Generator Running Online
28
SEL_AUTO
GEN_RUNNING
MAINS_ATS_CLS
GEN_ATS_CLS
STEP_4
MOVE INT
%I00001 Selector Switch Auto
%M00201 Generator Running
%I00034 BCC Mains ATS Closed
%I00035 BCC Generator ATS Closed
%M00004 Step Sequence No.4
SEL_TEST
%I00002 Selector Switch Test
1
5 IN
SEQ_CNT
%R00001 Sequence Counter
29
SEL_MAN
GEN_RUNNING
MAINS_ATS_CLS
GEN_ATS_CLS
STEP_4
MOVE INT
%I00003 Selector Switch Manual
%M00201 Generator Running
%I00034 BCC Mains ATS Closed
%I00035 BCC Generator ATS Closed
%M00004 Step Sequence No.4
1
5 IN
SEQ_CNT
%R00001 Sequence Counter

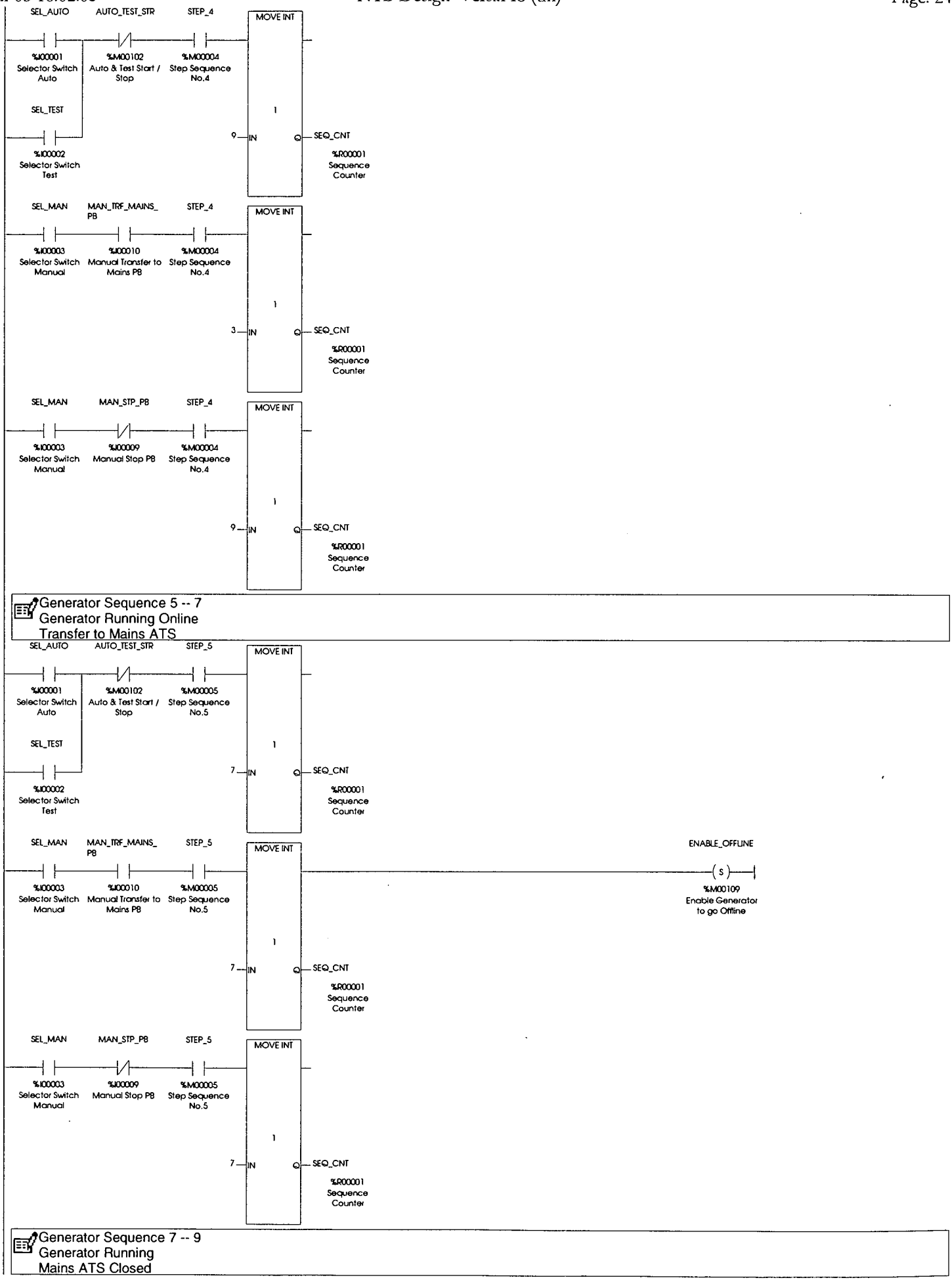
30
SEL_AUTO
AUTO_TEST_STR
STEP_4
%I00001 Selector Switch Auto
%M00102 Auto & Test Start / Stop
%M00004 Step Sequence No.4
SEL_TEST
%I00002 Selector Switch Test
MOVE INT
1
9 IN
Q SEQ_CNT
%R00001 Sequence Counter
31
SEL_MAN
MAN_TRF_MAINS_PB
STEP_4
%I00003 Selector Switch Manual
%I00010 Manual Transfer to Mains PB
%M00004 Step Sequence No.4
MOVE INT
1
3 IN
Q SEQ_CNT
%R00001 Sequence Counter
32
SEL_MAN
MAN_STP_PB
STEP_4
%I00003 Selector Switch Manual
%I00009 Manual Stop PB
%M00004 Step Sequence No.4
MOVE INT
1
9 IN
Q SEQ_CNT
%R00001 Sequence Counter
33
Generator Sequence 5 -- 7
Generator Running Online
Transfer to Mains ATS
34
SEL_AUTO
AUTO_TEST_STR
STEP_5
%I00001 Selector Switch Auto
%M00102 Auto & Test Start / Stop
%M00005 Step Sequence No.5
SEL_TEST
%I00002 Selector Switch Test
MOVE INT
1
7 IN
Q SEQ_CNT
%R00001 Sequence Counter
35
SEL_MAN
MAN_TRF_MAINS_PB
STEP_5
%I00003 Selector Switch Manual
%I00010 Manual Transfer to Mains PB
%M00005 Step Sequence No.5
MOVE INT
1
7 IN
Q SEQ_CNT
%R00001 Sequence Counter
ENABLE_OFFLINE
S
%M00109 Enable Generator to go Offline
36
SEL_MAN
MAN_STP_PB
STEP_5
%I00003 Selector Switch Manual
%I00009 Manual Stop PB
%M00005 Step Sequence No.5
MOVE INT
1
7 IN
Q SEQ_CNT
%R00001 Sequence Counter
37
Generator Sequence 7 -- 9
Generator Running
Mains ATS Closed

38

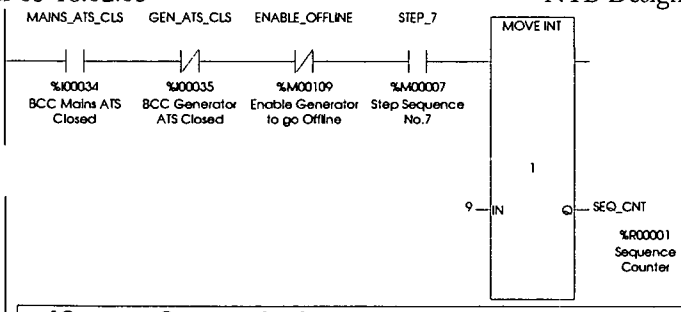

39 Generator Sequence 7 -- 3
Generator Running
Mains ATS Closed
Return to Step 3

40

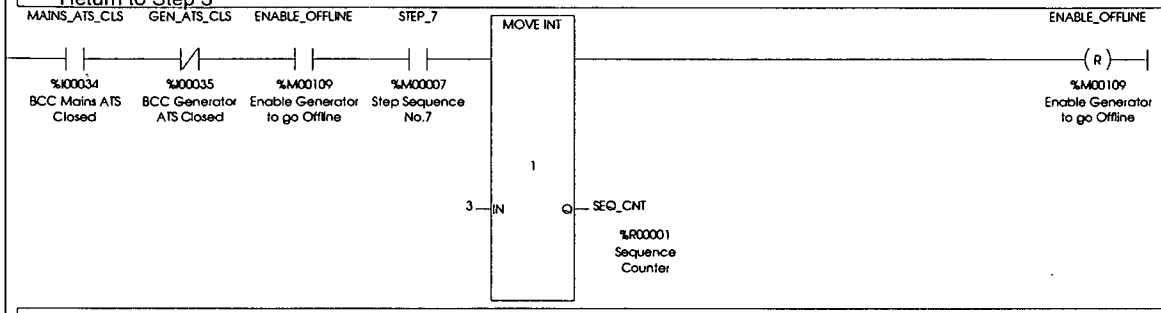

41 Generator Sequence 9 -- 1
Generator Cool Down

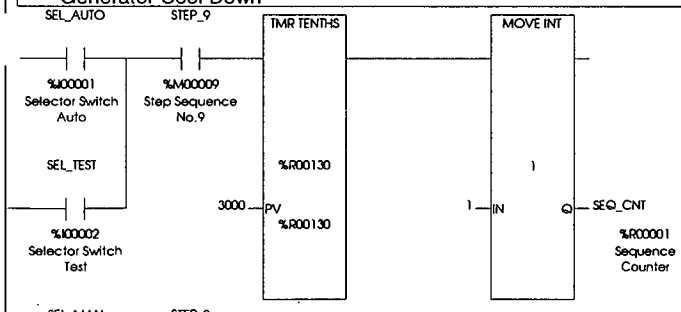

43

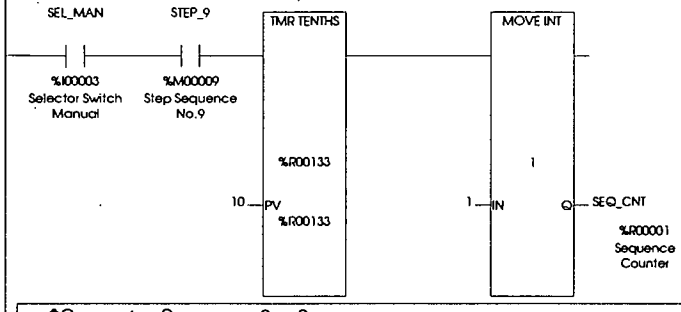

44 Generator Sequence 9 -- 2
Generator Restart

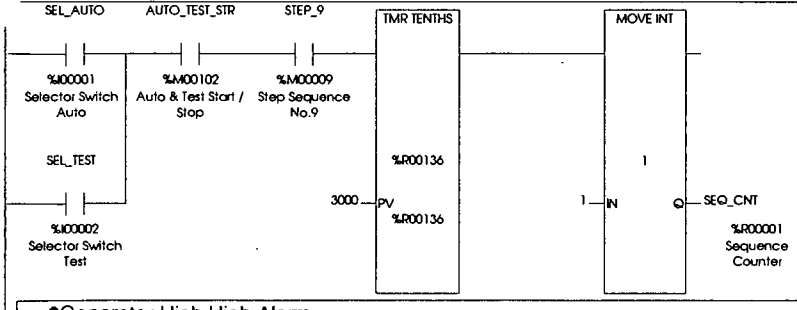

46 Generator High High Alarm
Generator Shut Down

47

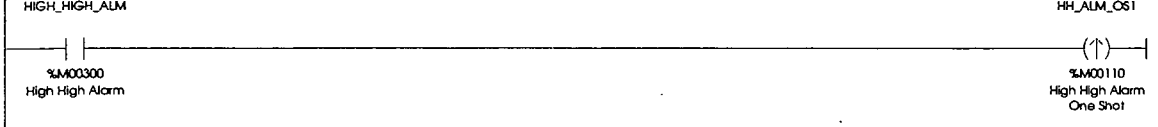

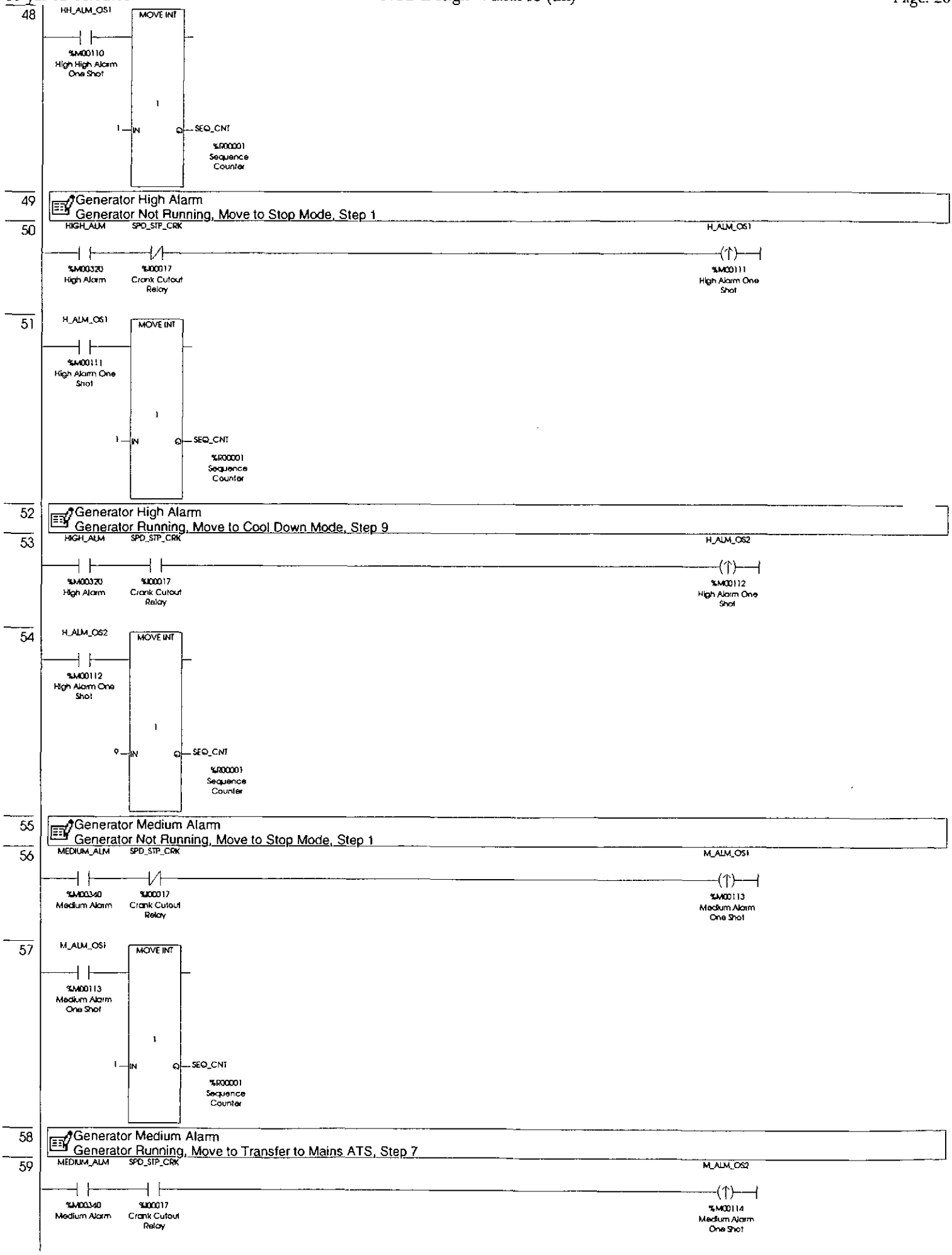
48
HH_ALM_OS1
%M00110
High High Alarm One Shot
MOVE INT
1
IN
Q
SEQ_CNT
%R00001
Sequence Counter
49
Generator High Alarm
Generator Not Running, Move to Stop Mode, Step 1
50
HIGH_ALM
SPD_STP_CRK
H_ALM_OS1
%M00320
High Alarm
%I00017
Crank Cutout Relay
%M00111
High Alarm One Shot
51
H_ALM_OS1
%M00111
High Alarm One Shot
MOVE INT
1
IN
Q
SEQ_CNT
%R00001
Sequence Counter
52
Generator High Alarm
Generator Running, Move to Cool Down Mode, Step 9
53
HIGH_ALM
SPD_STP_CRK
H_ALM_OS2
%M00320
High Alarm
%I00017
Crank Cutout Relay
%M00112
High Alarm One Shot
54
H_ALM_OS2
%M00112
High Alarm One Shot
MOVE INT
9
IN
Q
SEQ_CNT
%R00001
Sequence Counter
55
Generator Medium Alarm
Generator Not Running, Move to Stop Mode, Step 1
56
MEDIUM_ALM
SPD_STP_CRK
M_ALM_OS1
%M00340
Medium Alarm
%I00017
Crank Cutout Relay
%M00113
Medium Alarm One Shot
57
M_ALM_OS1
%M00113
Medium Alarm One Shot
MOVE INT
1
IN
Q
SEQ_CNT
%R00001
Sequence Counter
58
Generator Medium Alarm
Generator Running, Move to Transfer to Mains ATS, Step 7
59
MEDIUM_ALM
SPD_STP_CRK
M_ALM_OS2
%M00340
Medium Alarm
%I00017
Crank Cutout Relay
%M00114
Medium Alarm One Shot

60
M_ALM_OS2
%M00114
Medium Alarm
One Shot
MOVE INT
1
7 IN Q SEQ_CNT
%R00001
Sequence
Counter

61
Mains ATS FAil To Close Alarm
Generator Not Running, Move to Generator Stopped, Step 1

62
GEN_RUNNING MAINS_ATS_CLS_A LM M_ATS_ALM_OS1
%M00201 Generator Running
%M00382 Mains ATS Failed to Close Alarm
%M00115 Mains ATS Alarm One Shot

63
M_ATS_ALM_OS1
%M00115
Mains ATS Alarm
One Shot
MOVE INT
1
1 IN Q SEQ_CNT
%R00001
Sequence
Counter

64
Mains ATS Fail To Close Alarm
Generator Running, Move to Transfer to Generator ATS, Step 4

65
GEN_RUNNING MAINS_ATS_CLS_A LM AUTO_TEST_STR M_ATS_ALM_OS2
%M00201 Generator Running
%M00382 Mains ATS Failed to Close Alarm
%M00102 Auto & Test Start / Stop
%M00116 Mains ATS Alarm One Shot

66
M_ATS_ALM_OS2
%M00116
Mains ATS Alarm
One Shot
MOVE INT
1
4 IN Q SEQ_CNT
%R00001
Sequence
Counter

67
Generator Sequence Counter is Out of Range.
Reset to Step 1

68
ALW_ON
%S00007
Always ON
LT INT
SEQ_CNT IN1 Q
%R00001
Sequence
Counter
1 IN2
MOVE INT
1
1 IN Q SEQ_CNT
%R00001
Sequence
Counter

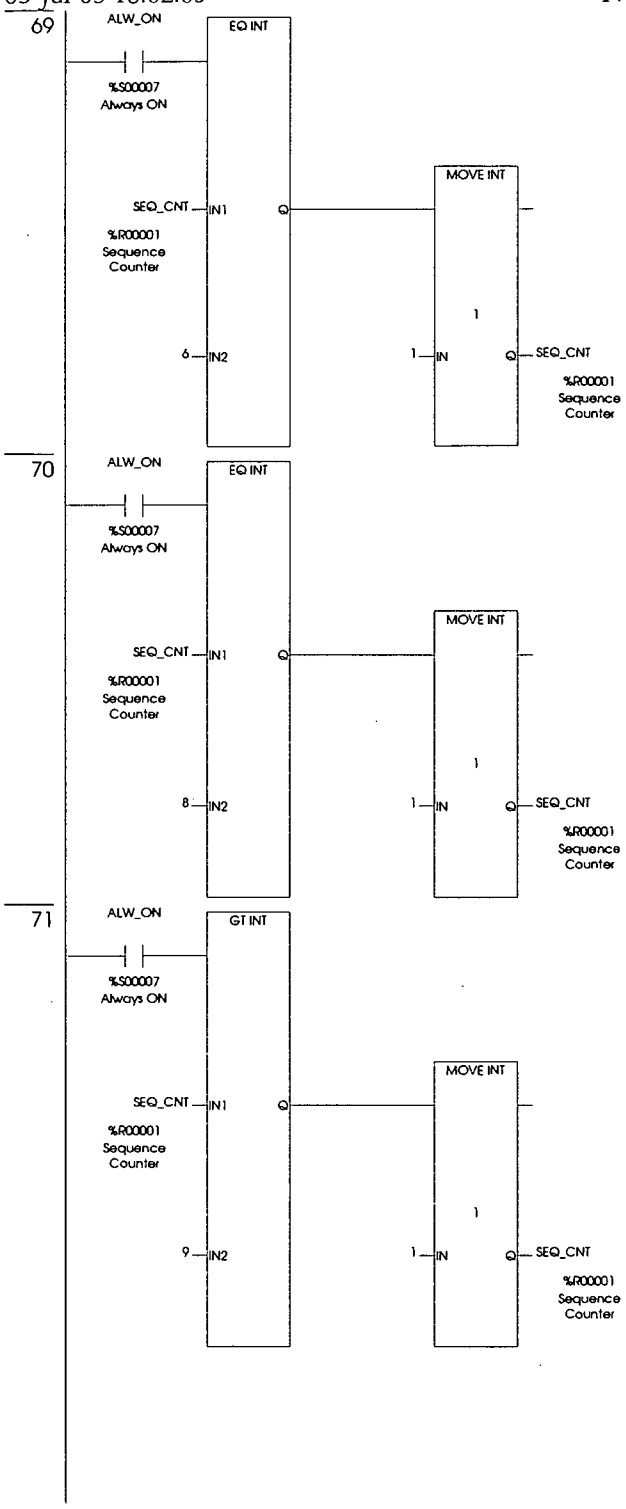
69
ALW_ON
%S00007
Always ON
EQ INT
SEQ_CNT
IN1
Q
%R00001
Sequence
Counter
6
IN2
MOVE INT
1
1
IN
Q
SEQ_CNT
%R00001
Sequence
Counter
70
ALW_ON
%S00007
Always ON
EQ INT
SEQ_CNT
IN1
Q
%R00001
Sequence
Counter
8
IN2
MOVE INT
1
1
IN
Q
SEQ_CNT
%R00001
Sequence
Counter
71
ALW_ON
%S00007
Always ON
GT INT
SEQ_CNT
IN1
Q
%R00001
Sequence
Counter
9
IN2
MOVE INT
1
1
IN
Q
SEQ_CNT
%R00001
Sequence
Counter

Block Name:.....MAIN.blk
Description:..... Control Logic for the Generator Sequence Steps.
Block Type:.....Ladder

1 Generator Sequence No.1
Generator Stopped

2
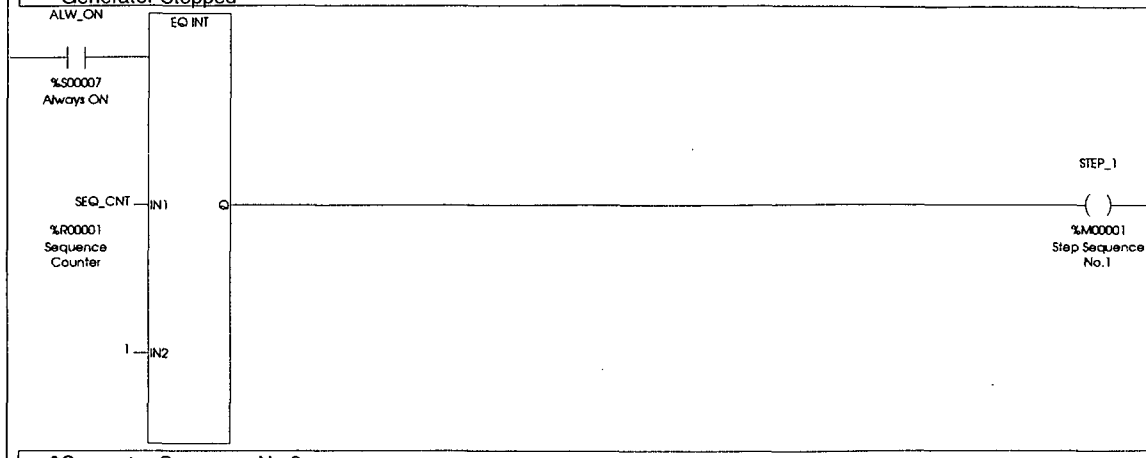

3 Generator Sequence No.2
Generator Starting

4
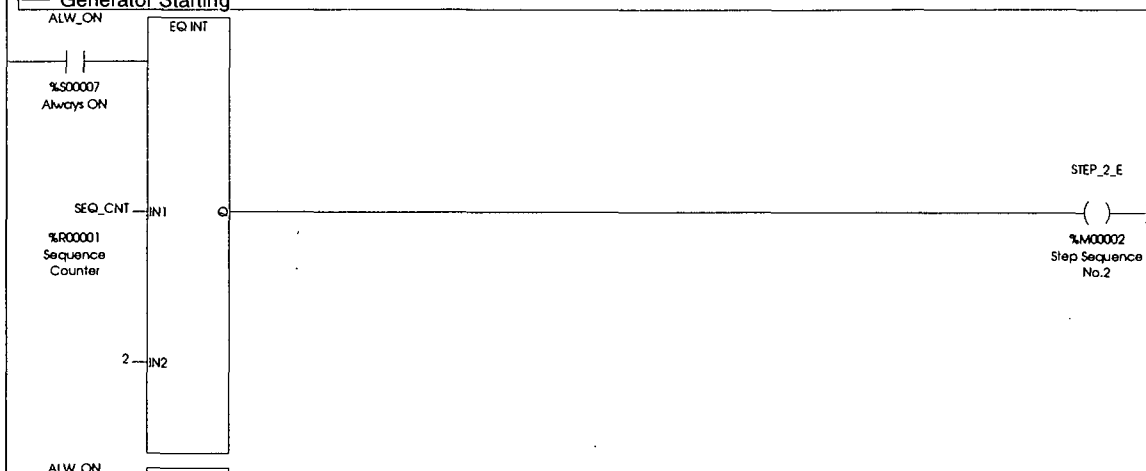

5
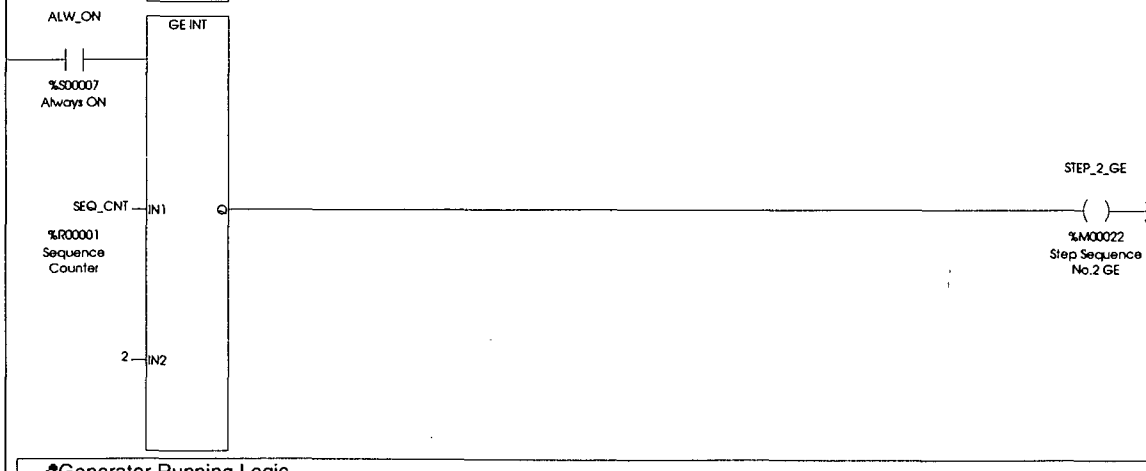

6 Generator Running Logic

7
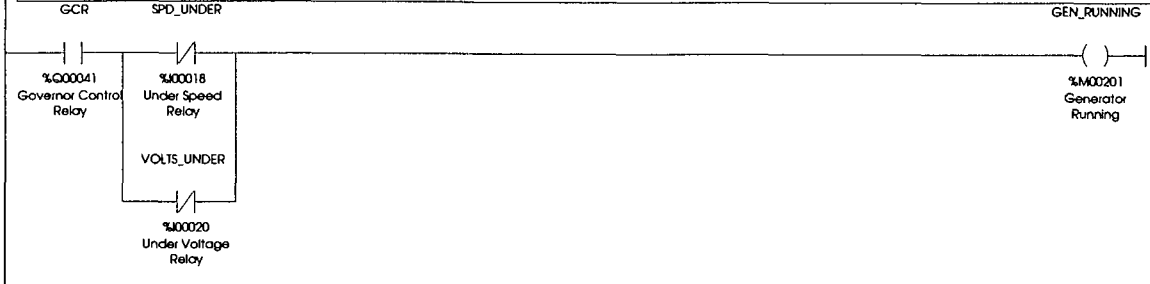

8 Generator Starter Motor and Governor Logic

9

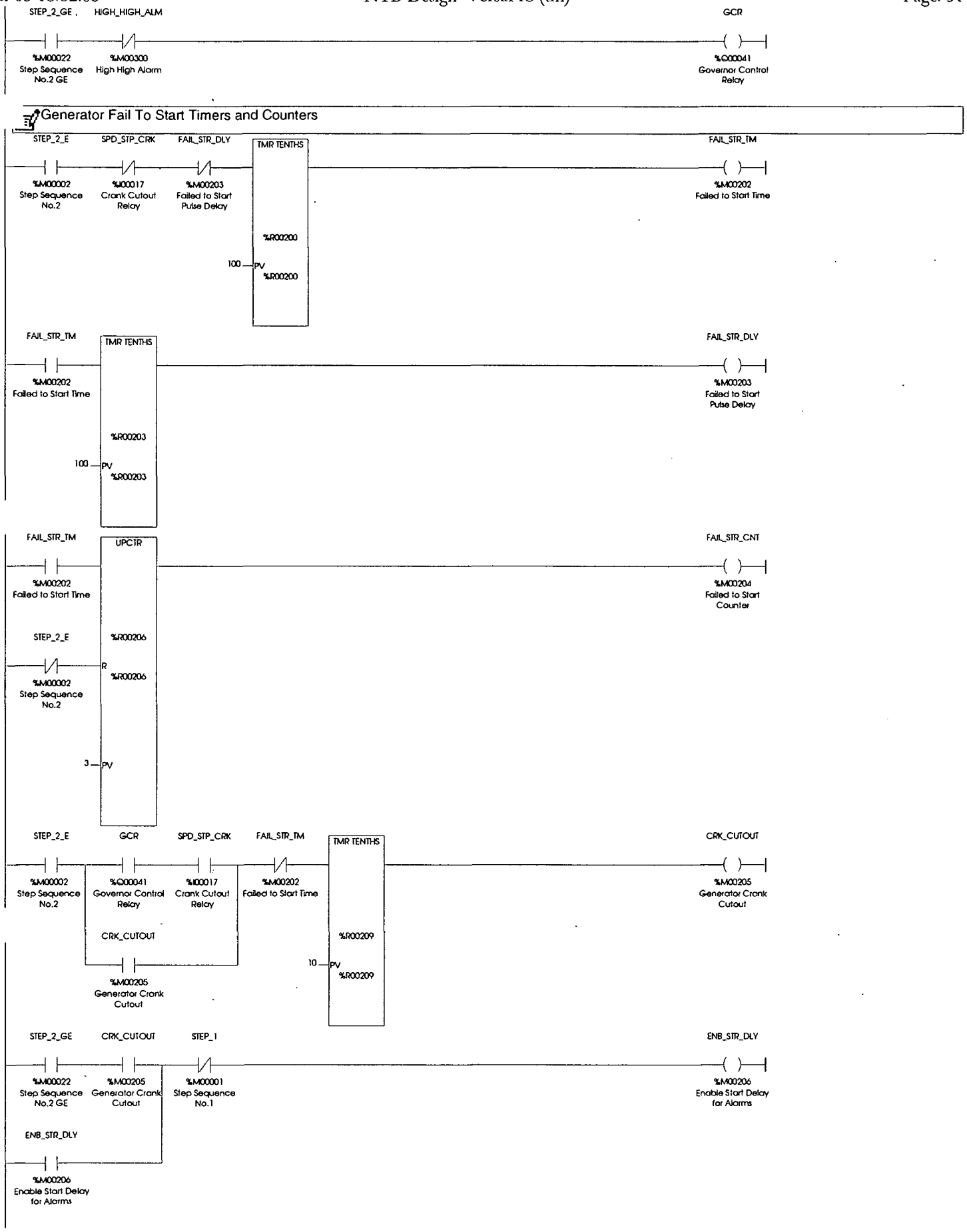
10
STEP_2_GE
%M00022
Step Sequence No.2 GE
HIGH_HIGH_ALM
%M00300
High High Alarm
GCR
%Q00041
Governor Control Relay
1
Generator Fail To Start Timers and Counters
12
STEP_2_E
%M00002
Step Sequence No.2
SPD_STP_CRK
%I00017
Crank Cutout Relay
FAIL_STR_DLY
%M00203
Failed to Start Pulse Delay
TMR TENTHS
%R00200
100
PV
%R00200
FAIL_STR_TM
%M00202
Failed to Start Time
13
FAIL_STR_TM
%M00202
Failed to Start Time
TMR TENTHS
%R00203
100
PV
%R00203
FAIL_STR_DLY
%M00203
Failed to Start Pulse Delay
14
FAIL_STR_TM
%M00202
Failed to Start Time
UPCTR
%R00206
STEP_2_E
%M00002
Step Sequence No.2
R
%R00206
3
PV
FAIL_STR_CNT
%M00204
Failed to Start Counter
15
STEP_2_E
%M00002
Step Sequence No.2
GCR
%Q00041
Governor Control Relay
SPD_STP_CRK
%I00017
Crank Cutout Relay
FAIL_STR_TM
%M00202
Failed to Start Time
TMR TENTHS
%R00209
10
PV
%R00209
CRK_CUTOUT
%M00205
Generator Crank Cutout
CRK_CUTOUT
%M00205
Generator Crank Cutout
16
STEP_2_GE
%M00022
Step Sequence No.2 GE
CRK_CUTOUT
%M00205
Generator Crank Cutout
STEP_1
%M00001
Step Sequence No.1
ENB_STR_DLY
%M00206
Enable Start Delay for Alarms
ENB_STR_DLY
%M00206
Enable Start Delay for Alarms

17
ENB_STR_DLY
%M00206
Enable Start Delay for Alarms
TMR TENTHS
%R00212
100 PV
%R00212
OIL_P_DLY
%M00207
Oil Pressure Alarm Delay

18
ENB_STR_DLY
%M00206
Enable Start Delay for Alarms
TMR TENTHS
%R00215
300 PV
%R00215
STR_UP_DLY
%M00208
Startup Alarm Delay

19
Generator Sequence No.3
Generator Running

20
ALW_ON
%S00007
Always ON
EQ INT
SEQ_CNT IN1 Q
%R00001
Sequence Counter
3 IN2
STEP_3
%M00003
Step Sequence No.3

21
Generator Sequence No.4
Transfer to Generator ATS

22
ALW_ON
%S00007
Always ON
EQ INT
SEQ_CNT IN1 Q
%R00001
Sequence Counter
4 IN2
STEP_4
%M00004
Step Sequence No.4

23
STEP_4
%M00004
Step Sequence No.4
M_ATS_OPN_1
%M00209
Mains ATS Open Command

24
STEP_4
%M00004
Step Sequence No.4
MAINS_ATS_CLS
%I00034
BCC Mains ATS Closed
TMR TENTHS
%R00218
20 PV
%R00218
G_ATS_CLS_1
%M00210
Generator ATS Close Command

25
Generator Sequence No.5
Generator Running Online

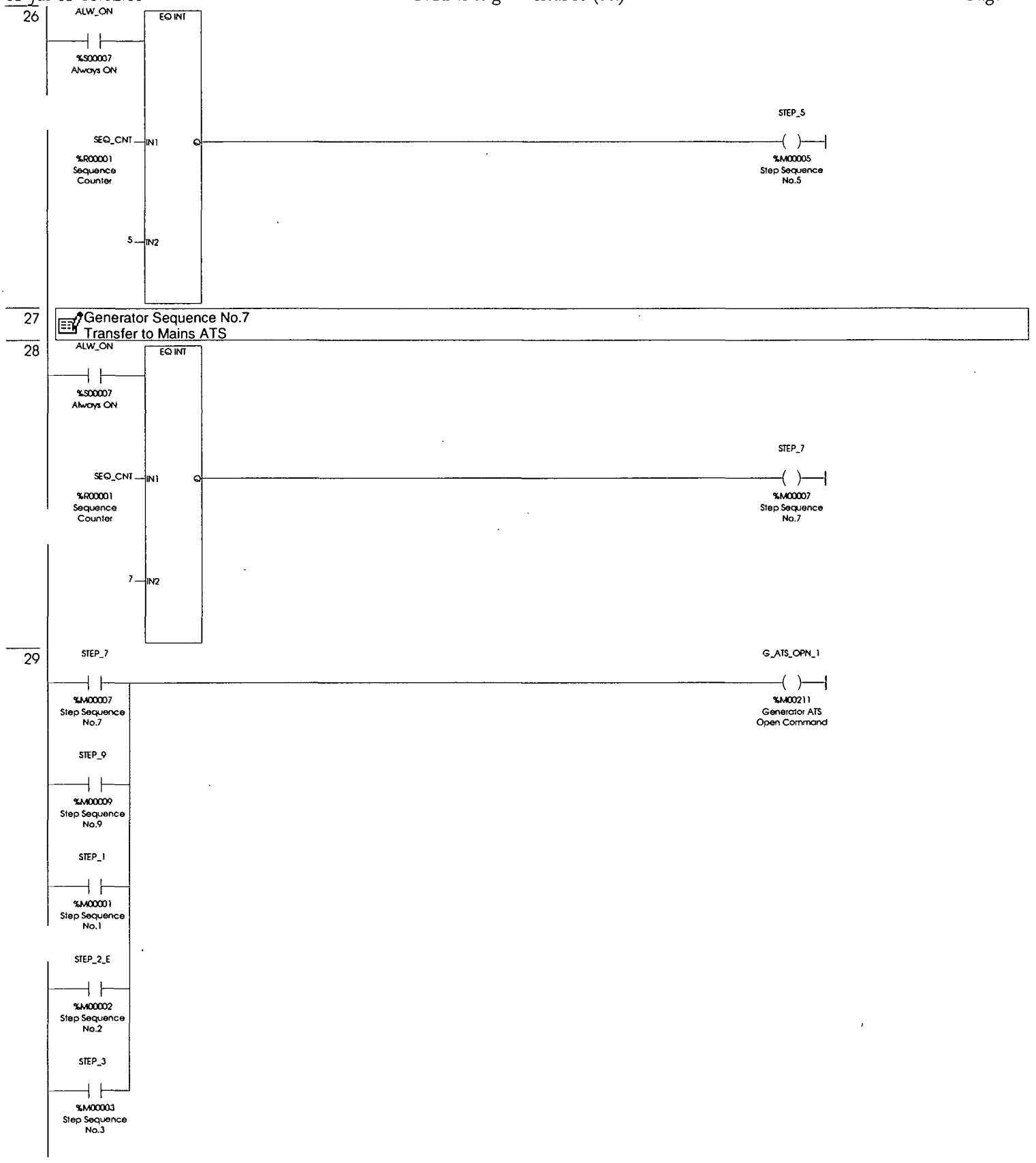
26
ALW_ON
%S00007
Always ON
EQ INT
SEQ_CNT
IN1
Q
%R00001
Sequence
Counter
5
IN2
STEP_5
%M00005
Step Sequence
No.5
27
Generator Sequence No.7
Transfer to Mains ATS
28
ALW_ON
%S00007
Always ON
EQ INT
SEQ_CNT
IN1
Q
%R00001
Sequence
Counter
7
IN2
STEP_7
%M00007
Step Sequence
No.7
29
STEP_7
%M00007
Step Sequence
No.7
G_ATS_OPN_1
%M00211
Generator ATS
Open Command
STEP_9
%M00009
Step Sequence
No.9
STEP_1
%M00001
Step Sequence
No.1
STEP_2_E
%M00002
Step Sequence
No.2
STEP_3
%M00003
Step Sequence
No.3

30

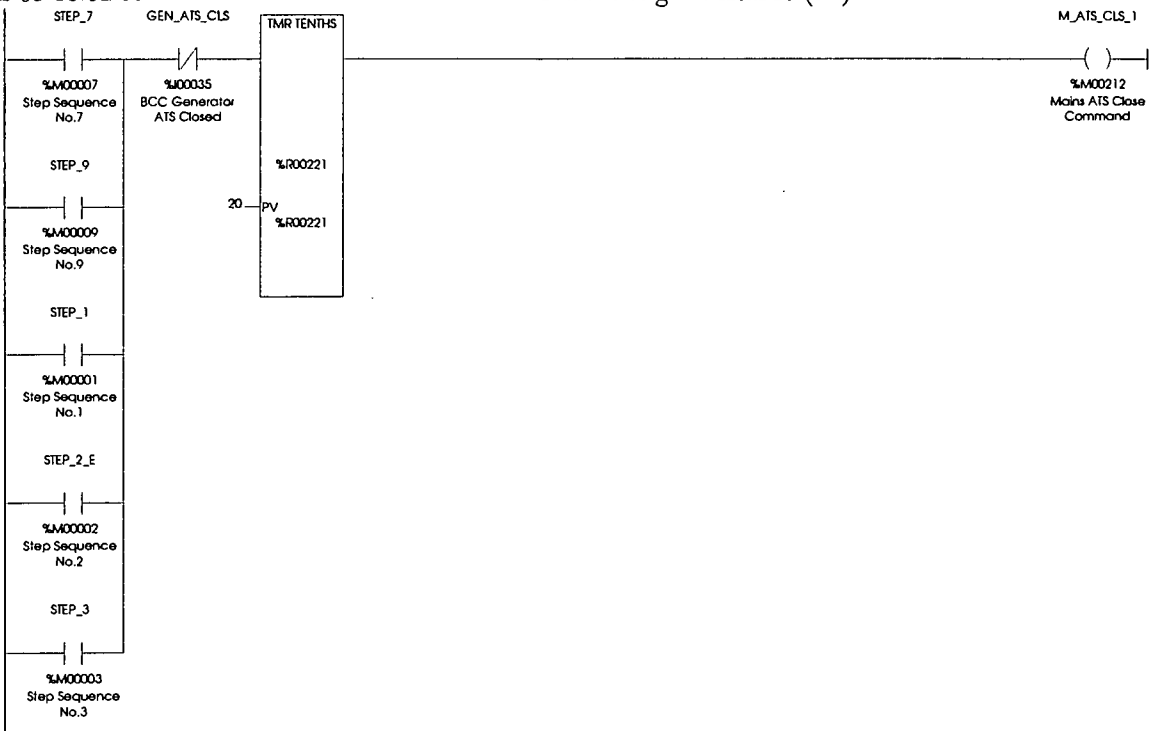

31 Generator Sequence No.9
Generator Offline
Generator Cool Down

32

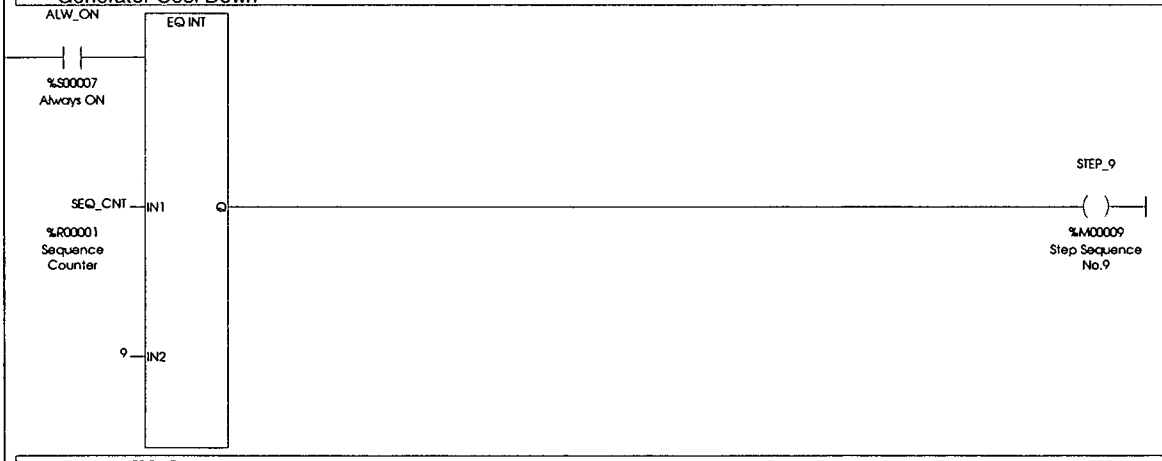

33 Mains ATS Control Logic

34

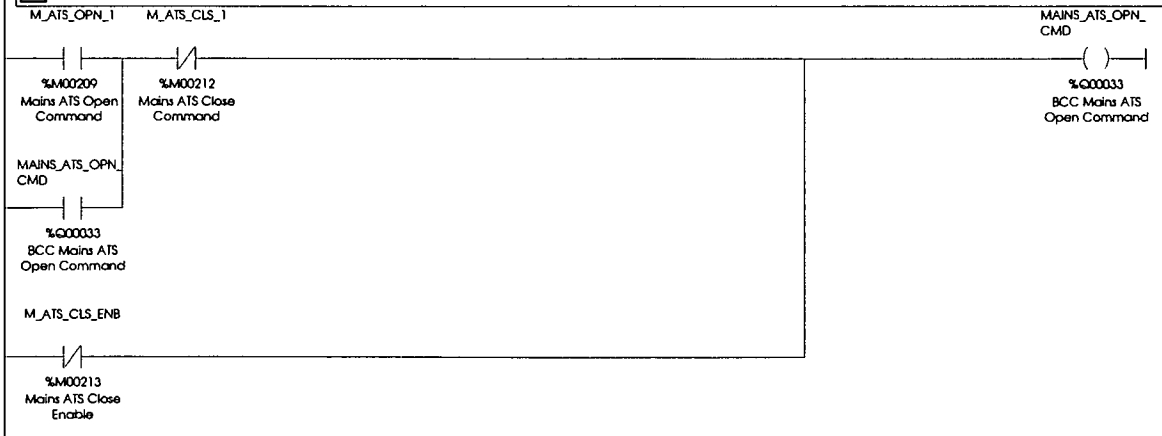

35

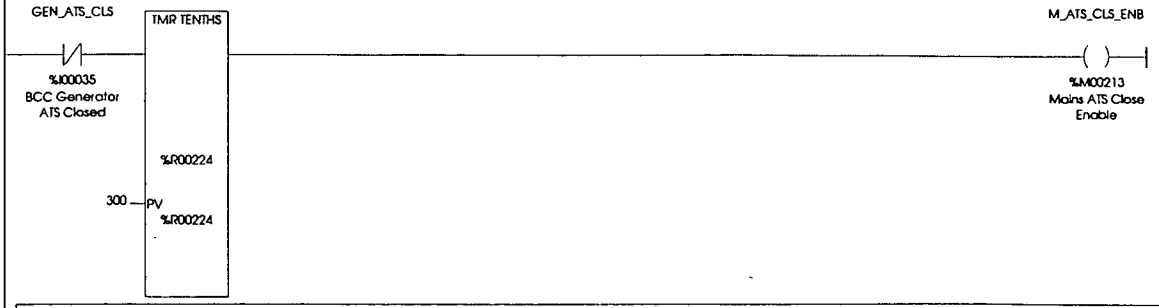

36 Generator ATS Control Logic

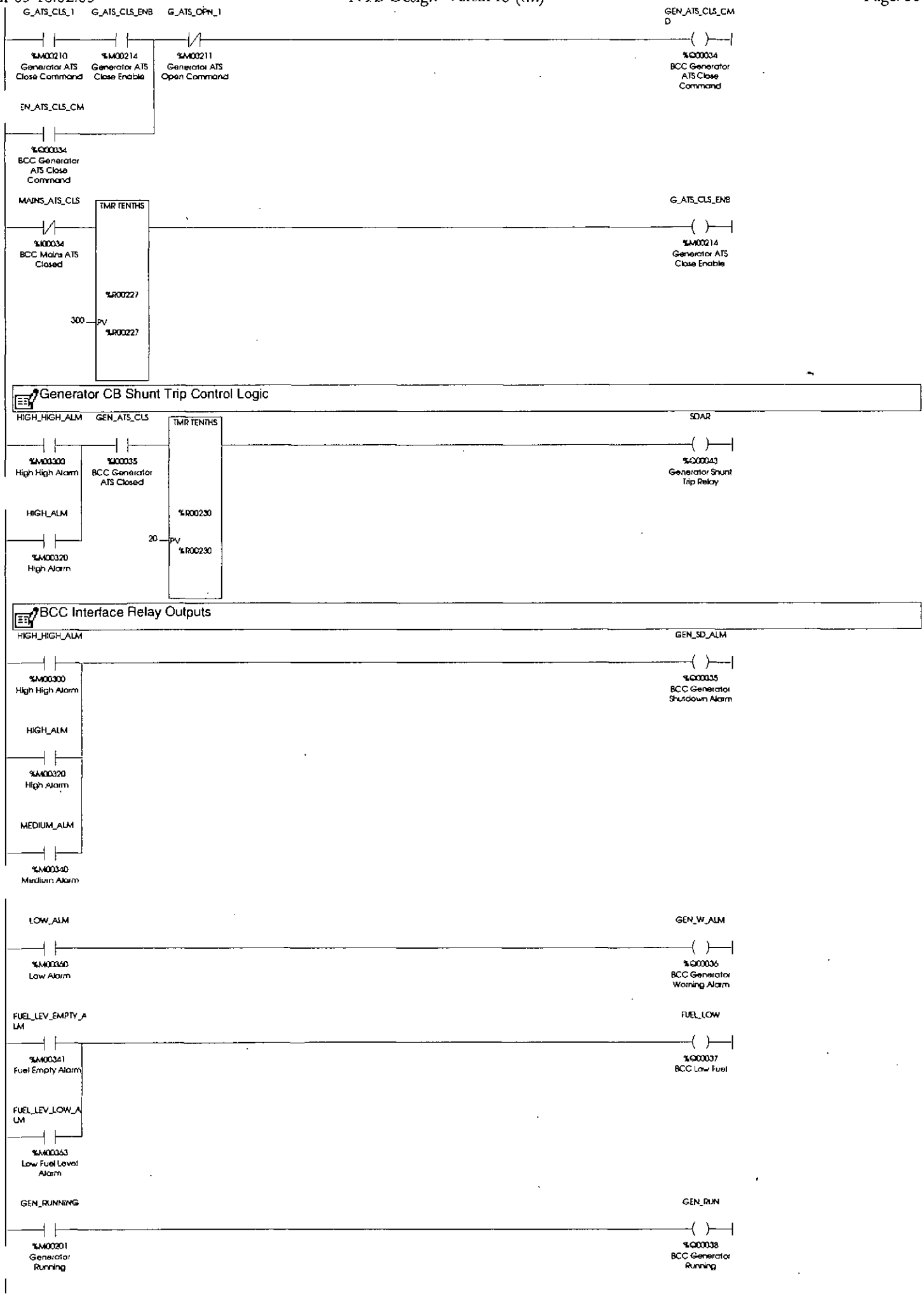
37
G_ATS_CLS_1
%M00210
Generator ATS Close Command
G_ATS_CLS_ENB
%M00214
Generator ATS Close Enable
G_ATS_OPN_1
%M00211
Generator ATS Open Command
GEN_ATS_CLS_CMD
%Q00034
BCC Generator ATS Close Command
EN_ATS_CLS_CM
%Q00034
BCC Generator ATS Close Command
38
MAINS_ATS_CLS
%I00034
BCC Mains ATS Closed
TMR TENTHS
%R00227
300
PV
%R00227
G_ATS_CLS_ENB
%M00214
Generator ATS Close Enable
39
Generator CB Shunt Trip Control Logic
40
HIGH_HIGH_ALM
%M00300
High High Alarm
GEN_ATS_CLS
%I00035
BCC Generator ATS Closed
TMR TENTHS
%R00230
20
PV
%R00230
SDAR
%Q00043
Generator Shunt Trip Relay
HIGH_ALM
%M00320
High Alarm
41
BCC Interface Relay Outputs
42
HIGH_HIGH_ALM
%M00300
High High Alarm
GEN_SD_ALM
%Q00035
BCC Generator Shutdown Alarm
HIGH_ALM
%M00320
High Alarm
MEDIUM_ALM
%M00340
Medium Alarm
43
LOW_ALM
%M00360
Low Alarm
GEN_W_ALM
%Q00036
BCC Generator Warning Alarm
44
FUEL_LEV_EMPTY_ALM
%M00341
Fuel Empty Alarm
FUEL_LOW
%Q00037
BCC Low Fuel
FUEL_LEV_LOW_ALM
%M00363
Low Fuel Level Alarm
45
GEN_RUNNING
%M00201
Generator Running
GEN_RUN
%Q00038
BCC Generator Running

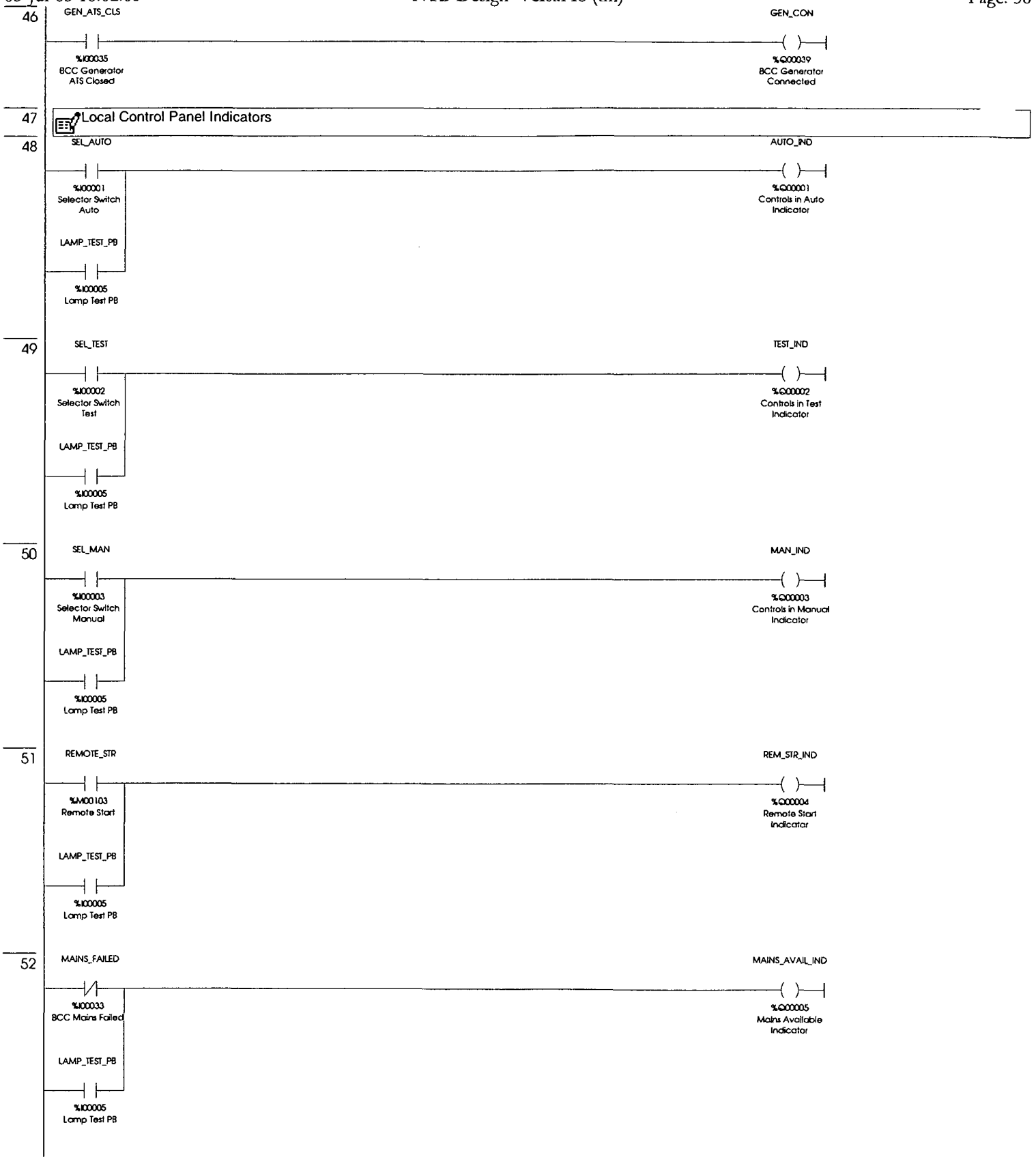
46
GEN_ATS_CLS
%I00035
BCC Generator ATS Closed
GEN_CON
%Q00039
BCC Generator Connected
47
Local Control Panel Indicators
48
SEL_AUTO
%I00001
Selector Switch Auto
LAMP_TEST_PB
%I00005
Lamp Test PB
AUTO_IND
%Q00001
Controls in Auto Indicator
49
SEL_TEST
%I00002
Selector Switch Test
LAMP_TEST_PB
%I00005
Lamp Test PB
TEST_IND
%Q00002
Controls in Test Indicator
50
SEL_MAN
%I00003
Selector Switch Manual
LAMP_TEST_PB
%I00005
Lamp Test PB
MAN_IND
%Q00003
Controls in Manual Indicator
51
REMOTE_STR
%M00103
Remote Start
LAMP_TEST_PB
%I00005
Lamp Test PB
REM_STR_IND
%Q00004
Remote Start Indicator
52
MAINS_FAILED
%I00033
BCC Mains Failed
LAMP_TEST_PB
%I00005
Lamp Test PB
MAINS_AVAIL_IND
%Q00005
Mains Available Indicator

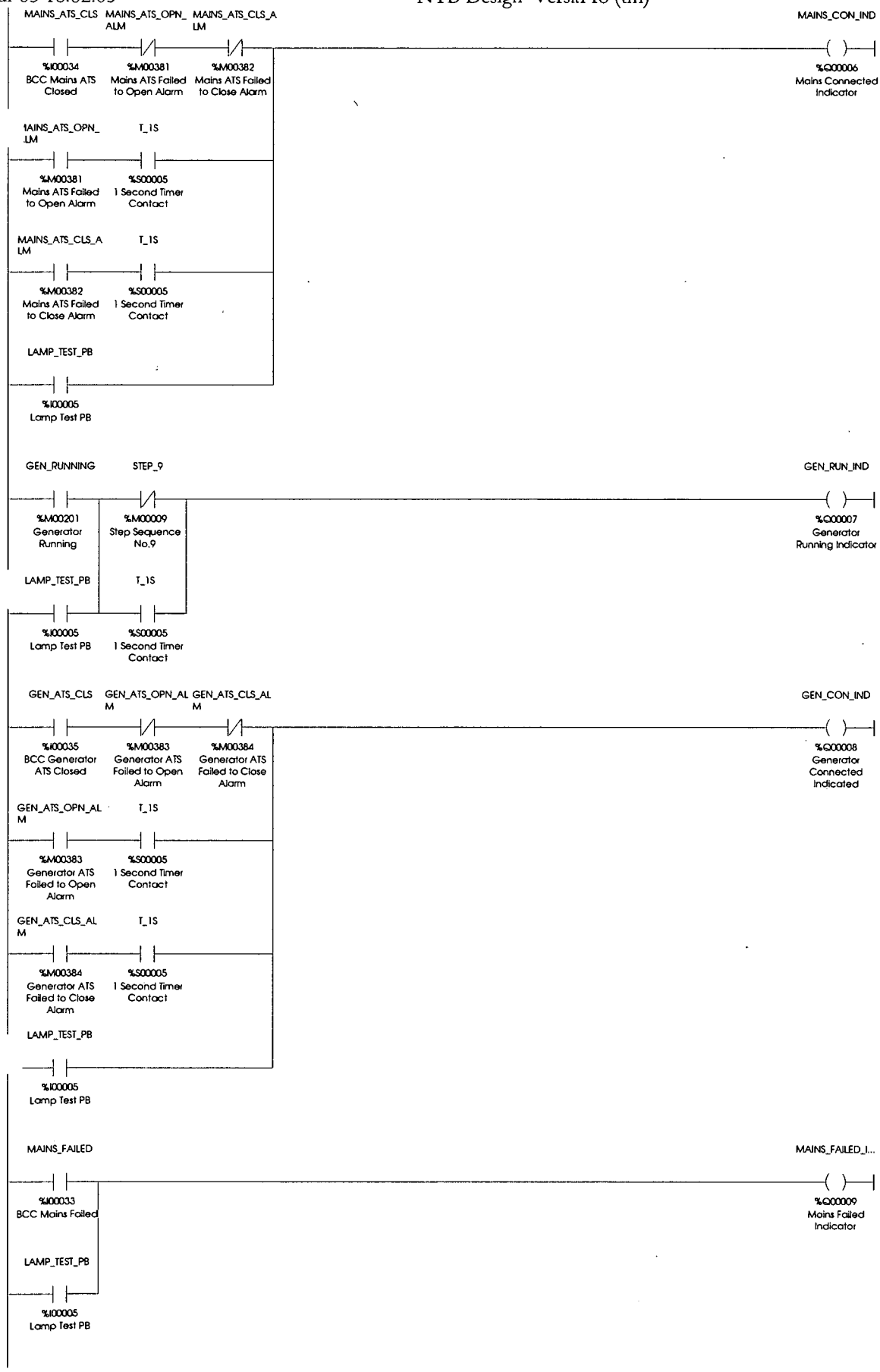
53
MAINS_ATS_CLS
%I00034
BCC Mains ATS Closed
MAINS_ATS_OPN_ALM
%M00381
Mains ATS Failed to Open Alarm
MAINS_ATS_CLS_ALM
%M00382
Mains ATS Failed to Close Alarm
MAINS_CON_IND
%Q00006
Mains Connected Indicator
MAINS_ATS_OPN_LM
%M00381
Mains ATS Failed to Open Alarm
T_1S
%S00005
1 Second Timer Contact
MAINS_ATS_CLS_ALM
%M00382
Mains ATS Failed to Close Alarm
T_1S
%S00005
1 Second Timer Contact
LAMP_TEST_PB
%I00005
Lamp Test PB
54
GEN_RUNNING
%M00201
Generator Running
STEP_9
%M00009
Step Sequence No.9
GEN_RUN_IND
%Q00007
Generator Running Indicator
LAMP_TEST_PB
%I00005
Lamp Test PB
T_1S
%S00005
1 Second Timer Contact
55
GEN_ATS_CLS
%I00035
BCC Generator ATS Closed
GEN_ATS_OPN_ALM
%M00383
Generator ATS Failed to Open Alarm
GEN_ATS_CLS_ALM
%M00384
Generator ATS Failed to Close Alarm
GEN_CON_IND
%Q00008
Generator Connected Indicated
GEN_ATS_OPN_ALM
%M00383
Generator ATS Failed to Open Alarm
T_1S
%S00005
1 Second Timer Contact
GEN_ATS_CLS_ALM
%M00384
Generator ATS Failed to Close Alarm
T_1S
%S00005
1 Second Timer Contact
LAMP_TEST_PB
%I00005
Lamp Test PB
56
MAINS_FAILED
%I00033
BCC Mains Failed
MAINS_FAILED_I...
%Q00009
Mains Failed Indicator
LAMP_TEST_PB
%I00005
Lamp Test PB

57

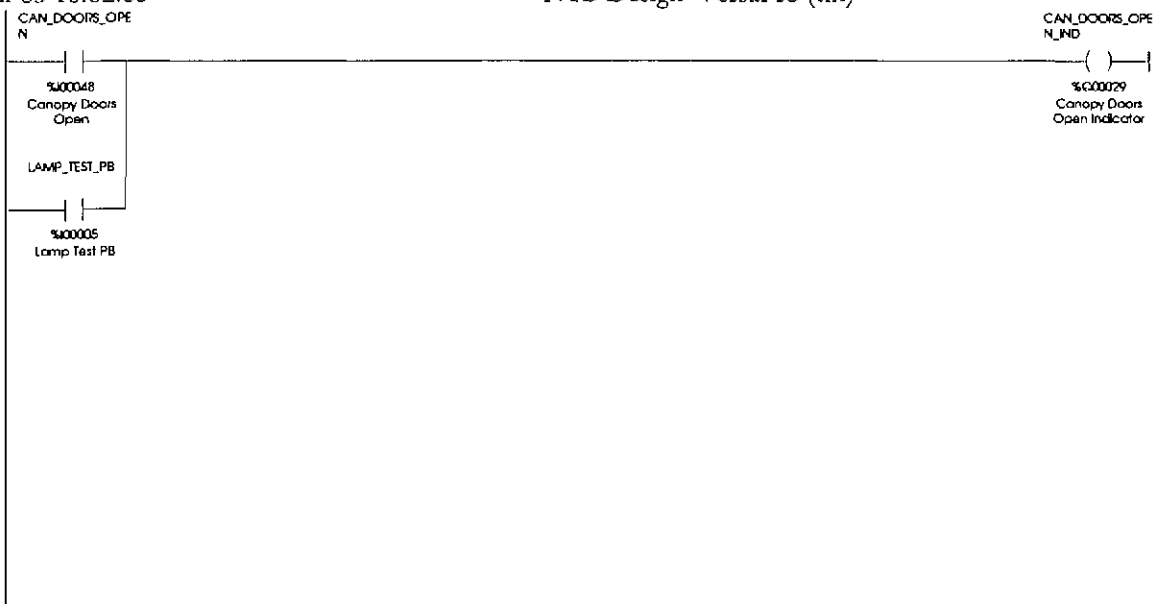
CAN_DOORS_OPEN
%I00048
Canopy Doors Open
LAMP_TEST_PB
%I00005
Lamp Test PB
CAN_DOORS_OPEN_IND
%Q00029
Canopy Doors Open Indicator

Block Name:..... _MAIN.blk
Description:..... Control Logic for the Call for Sub Routines.
Block Type:.....Ladder

1 Written for EPAC.
Project: Brisbane City Council, Standby Generator Program.

2 FST_SCN PRESETS

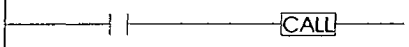

%S00001
Set to 1 when the current sweep is the first sweep

3 SEQ

4 MAIN

5 ALARM

6 AUD_ALM

7 MODBUS

Block Name:.....PRESETS.blk
Description:.....Control Logic Generator Presets.
Block Type:.....Ladder

1 Presets Routine
Move 1 to the Sequence Counter

2 ALW_ON

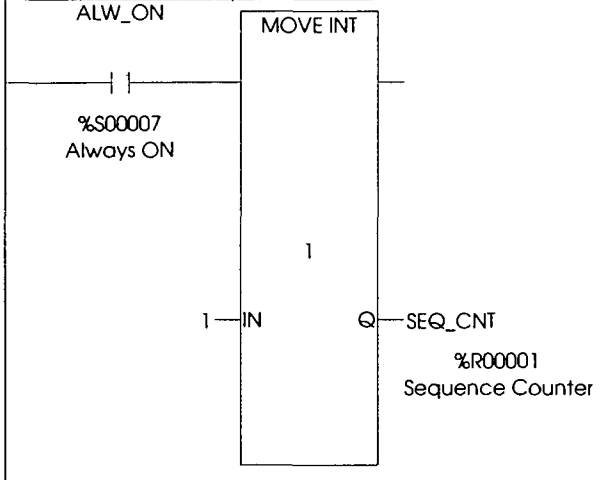

Block Name:.....MODBUS.blk
Description:..... Control Logic for the Modbus RTU Communications Data.
Block Type:.....Ladder

1 Generator Modbus RTU Slave Interface
40001 - Generator Sequence Number

2
ALW_ON
%S00007
Always ON

MOVE BOOL
48
SEL_AUTO — IN
Q — MODBUS_INPUTS
%I00001
Selector Switch
Auto
%R00002
Modbus Digital
Inputs

3
ALW_ON
%S00007
Always ON

MOVE BOOL
48
AUTO_IND — IN
Q — MODBUS_OUTPUTS
%Q00001
Controls in Auto
Indicator
%R00005
Modbus Digital
Outputs

4
ALW_ON
%S00007
Always ON

MOVE BOOL
16
GEN_OFF — IN
Q — MODBUS_STATUS...
%M00101
Generator OFF
%R00008
Modbus Status 1

5
ALW_ON
%S00007
Always ON

MOVE BOOL
16
GEN_RUNNING — IN
Q — MODBUS_STATUS...
%M00201
Generator Running
%R00009
Modbus Status 2

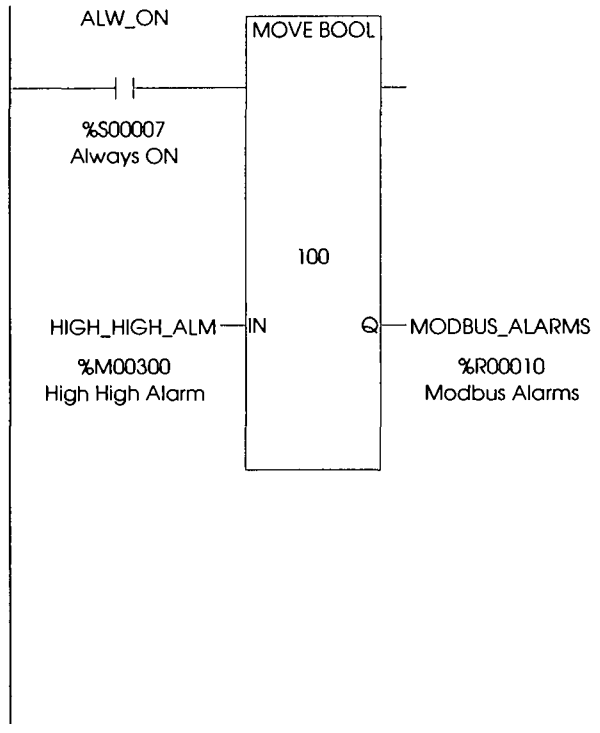
6
ALW_ON
%S00007
Always ON
MOVE BOOL
100
HIGH_HIGH_ALM
%M00300
High High Alarm
IN
Q
MODBUS_ALARMS
%R00010
Modbus Alarms

GLOBAL VARIABLES

Name	Type	Len	Address	Description	Stored Val	Scope	Ret	Ovr	Ext
SEL_AUTO	BIT	1	%I00001	Selector Switch Auto		Global	R		
SEL ST	BIT	1	%I00002	Selector Switch Test		Global	R		
SEL N	BIT	1	%I00003	Selector Switch Manual		Global	R		
EM_STOP_PB	BIT	1	%I00004	Emergency Stop PB		Global	R		
LAMP_TEST_PB	BIT	1	%I00005	Lamp Test PB		Global	R		
ALM_RESET_PB	BIT	1	%I00006	Alarm Reset PB		Global	R		
ALM_MUTE_PB	BIT	1	%I00007	Alarm Mute PB		Global	R		
MAN_STR_PB	BIT	1	%I00008	Manaul Start PB		Global	R		
MAN_STP_PB	BIT	1	%I00009	Manual Stop PB		Global	R		
MAN_TRF_MAINS_PB	BIT	1	%I00010	Manual Transfer to Mains PB		Global	R		
MAN_TRF_GEN_PB	BIT	1	%I00011	Manual Transfer to Generator PB		Global	R		
SPD_STP_CRK	BIT	1	%I00017	Crank Cutout Relay		Global	R		
SPD_UNDER	BIT	1	%I00018	Under Speed Relay		Global	R		
SPD_OVER	BIT	1	%I00019	Over Speed Relay		Global	R		
VOLTS_UNDER	BIT	1	%I00020	Under Voltage Relay		Global	R		
VOLTS_OVER	BIT	1	%I00021	Over Voltage Relay		Global	R		
ALT_TEMP	BIT	1	%I00022	Alternator High Temperature Relay		Global	R		
GEN_CB_TRIP	BIT	1	%I00023	Generator CB Tripped		Global	R		
MEN_FLT	BIT	1	%I00024	MEN Fault Relay		Global	R		
BAT_CHG_AC	BIT	1	%I00025	Battery Charger AC Relay		Global	R		
BAT_CONT_LOW_V	BIT	1	%I00026	Control Battery Charger Low Voltage		Global	R		
BA R_LOW_V	BIT	1	%I00027	Start Battery Charger Low Voltage		Global	R		
MAINS_FAILED	BIT	1	%I00033	BCC Mains Failed		Global	R		
MAINS_ATS_CLS	BIT	1	%I00034	BCC Mains ATS Closed		Global	R		
GEN_ATS_CLS	BIT	1	%I00035	BCC Generator ATS Closed		Global	R		
REM_STR	BIT	1	%I00036	BCC Remote Start		Global	R		
REM_STP	BIT	1	%I00037	BCC Remote Stop		Global	R		
OIL_P_LOW_SD	BIT	1	%I00041	Low Oil Pressure Shutdown		Global	R		
OIL_P_LOW_W	BIT	1	%I00042	Low Oil Pressure Warning		Global	R		
ENG_T_HI_SD	BIT	1	%I00043	High Engine Temperature Shutdown		Global	R		
ENG_T_HI_W	BIT	1	%I00044	High Engine Temperature Warning		Global	R		
RAD_WATER_LOW	BIT	1	%I00045	Low Radiator Water Level		Global	R		
FUEL_LEV_LOW	BIT	1	%I00046	Low Fuel Level		Global	R		
FUEL_LEV_EMPTY	BIT	1	%I00047	Fuel Empty		Global	R		
CAN_DOORS_OPEN	BIT	1	%I00048	Canopy Doors Open		Global	R		
STEP_1	BIT	1	%M00001	Step Sequence No.1		Global			
STEP_2_E	BIT	1	%M00002	Step Sequence No.2		Global			
STEP_3	BIT	1	%M00003	Step Sequence No.3		Global			
STEP_4	BIT	1	%M00004	Step Sequence No.4		Global			
STEP_5	BIT	1	%M00005	Step Sequence No.5		Global			
STEP_6	BIT	1	%M00006	Step Sequence No.6		Global			
STEP_7	BIT	1	%M00007	Step Sequence No.7		Global			
STI	BIT	1	%M00008	Step Sequence No.8		Global			
STL	BIT	1	%M00009	Step Sequence No.9		Global			
STEP_2_GE	BIT	1	%M00022	Step Sequence No.2 GE		Global			
GEN_OFF	BIT	1	%M00101	Generator OFF		Global			
AUTO_TEST_STR	BIT	1	%M00102	Auto Test Start / Stop		Global			
REMOTE_STR	BIT	1	%M00103	Remote Start		Global			
MAINS_FAIL_STP	BIT	1	%M00104	Mains Failed Stop		Global			
REMOTE_STP	BIT	1	%M00105	Remote Stop		Global			
TEST_STR	BIT	1	%M00106	Test Start		Global			
TEST_STP	BIT	1	%M00107	Test Stop		Global			
GEN_RUN_OFF	BIT	1	%M00108	Generator Run Off		Global			
ENABLE_OFFLINE	BIT	1	%M00109	Enable Generator to go Offline		Global			
HH_ALM_OS1	BIT	1	%M00110	High High Alarm One Shot		Global			
H_ALM_OS1	BIT	1	%M00111	High Alarm One Shot		Global			
H_ALM_OS2	BIT	1	%M00112	High Alarm One Shot		Global			
M_ALM_OS1	BIT	1	%M00113	Medium Alarm One Shot		Global			
M_ALM_OS2	BIT	1	%M00114	Medium Alarm One Shot		Global			
M_ATS_ALM_OS1	BIT	1	%M00115	Mains ATS Alarm One Shot		Global			
M_ATS_ALM_OS2	BIT	1	%M00116	Mains ATS Alarm One Shot		Global			
GEN_RUNNING	BIT	1	%M00201	Generator Running		Global			
FAIL_STR_TM	BIT	1	%M00202	Failed to Start Time		Global			
FAIL_STR_DLY	BIT	1	%M00203	Failed to Start Pulse Delay		Global			
FAI R_CNT	BIT	1	%M00204	Failed to Start Counter		Global			
CR JTOUT	BIT	1	%M00205	Generator Crank Cutout		Global			
ENB_STR_DLY	BIT	1	%M00206	Enable Start Delay for Alarms		Global			
OIL_P_DLY	BIT	1	%M00207	Oil Pressure Alarm Delay		Global			
STR_UP_DLY	BIT	1	%M00208	Startup Alarm Delay		Global			

GLOBAL VARIABLES

Name	Type	Len	Address	Description	Stored Val	Scope	Ret	Ovr	Ext
M_ATS_OPN_1	BIT	1	%M00209	Mains ATS Open Command		Global			
G_ATS_CLS_1	BIT	1	%M00210	Generator ATS Close Command		Global			
G_ATS_OPN_1	BIT	1	%M00211	Generator ATS Open Command		Global			
M_ATS_CLS_1	BIT	1	%M00212	Mains ATS Close Command		Global			
M_ATS_CLS_ENB	BIT	1	%M00213	Mains ATS Close Enable		Global			
G_ATS_CLS_ENB	BIT	1	%M00214	Generator ATS Close Enable		Global			
HIGH_HIGH_ALM	BIT	1	%M00300	High High Alarm		Global			
EM_STP_ALM	BIT	1	%M00301	Emergency Stop Alarm		Global			
MEN_ALM	BIT	1	%M00302	MEN Alarm		Global			
OIL_P_SD_ALM	BIT	1	%M00303	Low Oil Pressure Shutdown Alarm		Global			
ENG_T_SD_ALM	BIT	1	%M00304	High Engine Temperature Shutdown Alarm		Global			
RAD_WATER_LOW_ALM	BIT	1	%M00305	Low Radiator Water Level Alarm		Global			
SPD_OVER_ALM	BIT	1	%M00306	Over Speed Alarm		Global			
RAD_WATER_LOW_DLY	BIT	1	%M00315	Radiator Water Level Low Delay		Global			
SPD_OVER_DLY	BIT	1	%M00316	Over Speed Delay Timer		Global	R		
HIGH_ALM	BIT	1	%M00320	High Alarm		Global			
SPD_UNDER_ALM	BIT	1	%M00321	Under Speed Alarm		Global			
VOLTS_UNDER_ALM	BIT	1	%M00322	Alternator Voltage Under Alarm		Global			
VOLTS_OVER_ALM	BIT	1	%M00323	Alternator Voltage Over Alarm		Global			
GEN_CB_TRIP_ALM	BIT	1	%M00324	Generator CB Tripped Alarm		Global			
ALT_TEMP_ALM	BIT	1	%M00325	Alternator High Temperature Alarm		Global			
SPD_UNDER_DLY	BIT	1	%M00331	Under Speed Alarm Delay		Global			
VOLTS_UNDER_DLY	BIT	1	%M00332	Under Voltage Alarm Delay		Global			
VOLTS_OVER_DLY	BIT	1	%M00333	Over Voltage Alarm Delay		Global			
MEDIUM_ALM	BIT	1	%M00340	Medium Alarm		Global			
FUEL_LEV_EMPTY_ALM	BIT	1	%M00341	Fuel Empty Alarm		Global			
FAIL_TO_STR_ALM	BIT	1	%M00342	Fail to Start Alarm		Global			
FUEL_LEV_EMPTY_DLY	BIT	1	%M00351	Fuel Level Empty Alarm Delay		Global			
LOW_ALM	BIT	1	%M00360	Low Alarm		Global			
OIL_P_W_ALM	BIT	1	%M00361	Low Oil Pressure Warning Alarm		Global			
ENG_T_W_ALM	BIT	1	%M00362	High Engine Temperature Warning Alarm		Global			
FUEL_LEV_LOW_ALM	BIT	1	%M00363	Low Fuel Level Alarm		Global			
BAT_CHG_AC_ALM	BIT	1	%M00364	Battery Charger AC Alarm		Global			
BAT_CONT_LOW_V_ALM	BIT	1	%M00365	Control Battery Charger Low Voltage Alarm		Global			
BAT_STR_LOW_V_ALM	BIT	1	%M00366	Start Battery Charger Low Voltage Alarm		Global			
FUEL_LEV_LOW_DLY	BIT	1	%M00373	Fuel Level Low Alarm Delay		Global	R		
BAT_CHG_AC_DLY	BIT	1	%M00374	Battery Charger AC Failure Delay		Global	R		
BAT_CONT_LOW_V_DLY	BIT	1	%M00375	Control Battery Low Voltage Delay		Global	R		
BAT_STR_LOW_V_DLY	BIT	1	%M00376	Start Battery Low Voltage Delay		Global	R		
MAINS_ATS_OPN_ALM	BIT	1	%M00381	Mains ATS Failed to Open Alarm		Global			
MAINS_ATS_CLS_ALM	BIT	1	%M00382	Mains ATS Failed to Close Alarm		Global			
GEN_ATS_OPN_ALM	BIT	1	%M00383	Generator ATS Failed to Open Alarm		Global			
GEN_ATS_CLS_ALM	BIT	1	%M00384	Generator ATS Failed to Close Alarm		Global			
NEW_ALM	BIT	1	%M00400	New Alarm		Global	R		
%M00401	BIT	1	%M00401	**No Description**		Global	R		
%M00402	BIT	1	%M00402	**No Description**		Global	R		
%M00403	BIT	1	%M00403	**No Description**		Global	R		
%M00404	BIT	1	%M00404	**No Description**		Global	R		
%M00405	BIT	1	%M00405	**No Description**		Global	R		
%M00406	BIT	1	%M00406	**No Description**		Global	R		
%M00421	BIT	1	%M00421	**No Description**		Global	R		
%M00422	BIT	1	%M00422	**No Description**		Global	R		
%M00423	BIT	1	%M00423	**No Description**		Global	R		
%M00424	BIT	1	%M00424	**No Description**		Global	R		
%M00425	BIT	1	%M00425	**No Description**		Global	R		

GLOBAL VARIABLES

Name	Type	Len	Address	Description	Stored Val	Scope	Ret	Ovr	Ext
%M00441	BIT	1	%M00441	**No Description**		Global	R		
%M 42	BIT	1	%M00442	**No Description**		Global	R		
%M 61	BIT	1	%M00461	**No Description**		Global	R		
%M00462	BIT	1	%M00462	**No Description**		Global	R		
%M00463	BIT	1	%M00463	**No Description**		Global	R		
%M00464	BIT	1	%M00464	**No Description**		Global	R		
%M00465	BIT	1	%M00465	**No Description**		Global	R		
%M00466	BIT	1	%M00466	**No Description**		Global	R		
%M00481	BIT	1	%M00481	**No Description**		Global	R		
%M00482	BIT	1	%M00482	**No Description**		Global	R		
%M00483	BIT	1	%M00483	**No Description**		Global	R		
%M00484	BIT	1	%M00484	**No Description**		Global	R		
AUTO_IND	BIT	1	%Q00001	Controls in Auto Indicator		Global			
TEST_IND	BIT	1	%Q00002	Controls in Test Indicator		Global			
MAN_IND	BIT	1	%Q00003	Controls in Manual Indicator		Global			
REM_STR_IND	BIT	1	%Q00004	Remote Start Indicator		Global			
MAINS_AVAIL_IND	BIT	1	%Q00005	Mains Available Indicator		Global			
MAINS_CON_IND	BIT	1	%Q00006	Mains Connected Indicator		Global			
GEN_RUN_IND	BIT	1	%Q00007	Generator Running Indicator		Global			
GEN_CON_IND	BIT	1	%Q00008	Generator Connected Indicated		Global			
MAINS_FAILED_IND	BIT	1	%Q00009	Mains Failed Indicator		Global			
EM_STOP_IND	BIT	1	%Q00010	Emergency Stop Indicator		Global			
MEN_FLT_IND	BIT	1	%Q00011	MEN Fault Indicator		Global			
OIL P LOW_SD_IND	BIT	1	%Q00012	Low Oil Pressure Shutdown Indicator		Global			
OIL_P_LOW_W_IND	BIT	1	%Q00013	Low Oil Pressure Warning Indicator		Global			
ENG_T_HI_SD_IND	BIT	1	%Q00014	High Engine Temperature Shutdown Indicator		Global			
ENG_T_HI_W_IND	BIT	1	%Q00015	High Engine Temperature Warning Indicator		Global			
RAD_WATER_LOW_IND	BIT	1	%Q00016	Low Radiator Water Level Indicator		Global			
FUEL_LEV_EMPTY_IND	BIT	1	%Q00017	Fuel Empty Indicator		Global			
FUEL_LEV_LOW_IND	BIT	1	%Q00018	Low Fuel Level Indicator		Global			
SPD_OVER_IND	BIT	1	%Q00019	Over Speed Indicator		Global			
SPD_UNDER_IND	BIT	1	%Q00020	Under Speed Indicator		Global			
FAIL_TO_STR_IND	BIT	1	%Q00021	Fail to Start Indicator		Global			
VOLTS_UNDER_IND	BIT	1	%Q00022	Alternator Voltage Under Indicator		Global			
VOLTS_OVER_IND	BIT	1	%Q00023	Alternator Voltage Over Indicator		Global			
ALT_TEMP_IND	BIT	1	%Q00024	Alternator High Temperature Indicator		Global			
GEN_CB_TRIP_IND	BIT	1	%Q00025	Generator CB Tripped Indicator		Global			
BAT_CHG_AC_IND	BIT	1	%Q00026	Battery Charger AC Indicator		Global			
BA ONT_LOW_V_IND	BIT	1	%Q00027	Control Battery Charger Low Voltage Indicator		Global			
BAT_STR_LOW_V_IND	BIT	1	%Q00028	Start Battery Charger Low Voltage Indicator		Global			
CAN_DOORS_OPEN_IND	BIT	1	%Q00029	Canopy Doors Open Indicator		Global			
MAINS_ATS_OPN_CMD	BIT	1	%Q00033	BCC Mains ATS Open Command		Global			
GEN_ATS_CLS_CMD	BIT	1	%Q00034	BCC Generator ATS Close Command		Global			
GEN_SD_ALM	BIT	1	%Q00035	BCC Generator Shutdown Alarm		Global			
GEN_W_ALM	BIT	1	%Q00036	BCC Generator Warning Alarm		Global			
FUEL_LOW	BIT	1	%Q00037	BCC Low Fuel		Global			
GEN_RUN	BIT	1	%Q00038	BCC Generator Running		Global			
GEN_CON	BIT	1	%Q00039	BCC Generator Connected		Global			
SMR	BIT	1	%Q00040	Starter Motor Relay		Global			
GCR	BIT	1	%Q00041	Governor Control Relay		Global			
AAR	BIT	1	%Q00042	Audible Alarm Relay		Global			
SDAR	BIT	1	%Q00043	Generator Shunt Trip Relay		Global			
SEQ_CNT	WORD	1	%R00001	Sequence Counter		Global	R		
MODBUS_INPUTS	WORD	1	%R00002	Modbus Digital Inputs		Global	R		
MODBUS_OUTPUTS	WORD	1	%R00005	Modbus Digital Outputs		Global	R		
MO S_STATUS_1	WORD	1	%R00008	Modbus Status 1		Global	R		
MO S_STATUS_2	WORD	1	%R00009	Modbus Status 2		Global	R		
MODBUS_ALARMS	WORD	1	%R00010	Modbus Alarms		Global	R		
%R00100	WORD	3	%R00100	**No Description**		Global	R		
%R00103	WORD	3	%R00103	**No Description**		Global	R		

GLOBAL VARIABLES

Name	Type	Len	Address	Description	Stored Val	Scope	Ret	Ovr	Ext
%R00106	WORD	3	%R00106	**No Description**		Global	R		
%R00109	WORD	3	%R00109	**No Description**		Global	R		
%R00112	WORD	3	%R00112	**No Description**		Global	R		
%R00115	WORD	3	%R00115	**No Description**		Global	R		
%R00118	WORD	3	%R00118	**No Description**		Global	R		
%R00121	WORD	3	%R00121	**No Description**		Global	R		
%R00124	WORD	3	%R00124	**No Description**		Global	R		
%R00127	WORD	3	%R00127	**No Description**		Global	R		
%R00130	WORD	3	%R00130	**No Description**		Global	R		
%R00200	WORD	3	%R00200	**No Description**		Global	R		
%R00203	WORD	3	%R00203	**No Description**		Global	R		
%R00206	WORD	3	%R00206	**No Description**		Global	R		
%R00209	WORD	3	%R00209	**No Description**		Global	R		
%R00212	WORD	3	%R00212	**No Description**		Global	R		
%R00215	WORD	3	%R00215	**No Description**		Global	R		
%R00218	WORD	3	%R00218	**No Description**		Global	R		
%R00221	WORD	3	%R00221	**No Description**		Global	R		
%R00224	WORD	3	%R00224	**No Description**		Global	R		
%R00227	WORD	3	%R00227	**No Description**		Global	R		
%R00230	WORD	3	%R00230	**No Description**		Global	R		
%R00300	WORD	3	%R00300	**No Description**		Global	R		
%R00303	WORD	3	%R00303	**No Description**		Global	R		
%R00306	WORD	3	%R00306	**No Description**		Global	R		
%R00309	WORD	3	%R00309	**No Description**		Global	R		
%R00312	WORD	3	%R00312	**No Description**		Global	R		
%R00315	WORD	3	%R00315	**No Description**		Global	R		
%R00318	WORD	3	%R00318	**No Description**		Global	R		
%R00321	WORD	3	%R00321	**No Description**		Global	R		
%R00324	WORD	3	%R00324	**No Description**		Global	R		
%R00327	WORD	3	%R00327	**No Description**		Global	R		
%R00330	WORD	3	%R00330	**No Description**		Global	R		
%R00333	WORD	3	%R00333	**No Description**		Global	R		
%R00336	WORD	3	%R00336	**No Description**		Global	R		
%R00339	WORD	3	%R00339	**No Description**		Global	R		
FST_SCN	BIT	1	%S00001	Set to 1 when the current sweep is the first sweep		Global	R		
LST_SCAN	BIT	1	%S00002	Reset from 1 to 0 when the current sweep is the last sweep		Global	R		
T_10MS	BIT	1	%S00003	0.01 Second Timer Contact		Global	R		
T_100MS	BIT	1	%S00004	0.1 Second Timer Contact		Global	R		
T_1S	BIT	1	%S00005	1 Second Timer Contact		Global	R		
T_1M	BIT	1	%S00006	1 Minute Timer Contact		Global	R		
ALW_ON	BIT	1	%S00007	Always ON		Global	R		
ALW_OFF	BIT	1	%S00008	Always OFF		Global	R		
PLC_BAT	BIT	1	%S00014	Set to indicate a bad battery in the CPU		Global	R		
%R00133	WORD	3	%R00133	**No Description**		Global	R		
%R00136	WORD	3	%R00136	**No Description**		Global	R		

GLOBAL SUMMARY OF HIGHEST USED REFERENCE ADDRESSES

MEMORY AREA	ADDRESS
Analog Input (%AI)	None Used
Analog Output (%AQ)	None Used
Input (%I)	%I00048
Output (%Q)	%Q00048
Internal Memory (%M)	%M00484
Register (%R)	%R00341
Genius Global (%G)	None Used
Genius Global (%GA)	None Used
Genius Global (%GB)	None Used
Genius Global (%GC)	None Used
Genius Global (%GD)	None Used
Genius Global (%GE)	None Used
Temporary (%T)	None Used
System (%S)	%S00007
System (%SA)	None Used
System (%SB)	None Used
System (%SC)	None Used
Program (%P)	None Used

Table of Contents

Block: AUD_ALM.blk
Properties ... 2
Logic ... 3
Block: ALARM.blk
Properties ... 7
Logic ... 8
Block: SEQ.blk
Properties ... 19
Logic ... 20
Block: MAIN.blk
Properties ... 29
Logic ... 30
Block: _MAIN.blk
Properties ... 39
Logic ... 40
Block: PRESETS.blk
Properties ... 41
Logic ... 42
Block: MODBUS.blk
Properties ... 44
Logic ... 45
Variable Declarations Table ... 47
Summary of Highest Used Reference Addresses ... 51

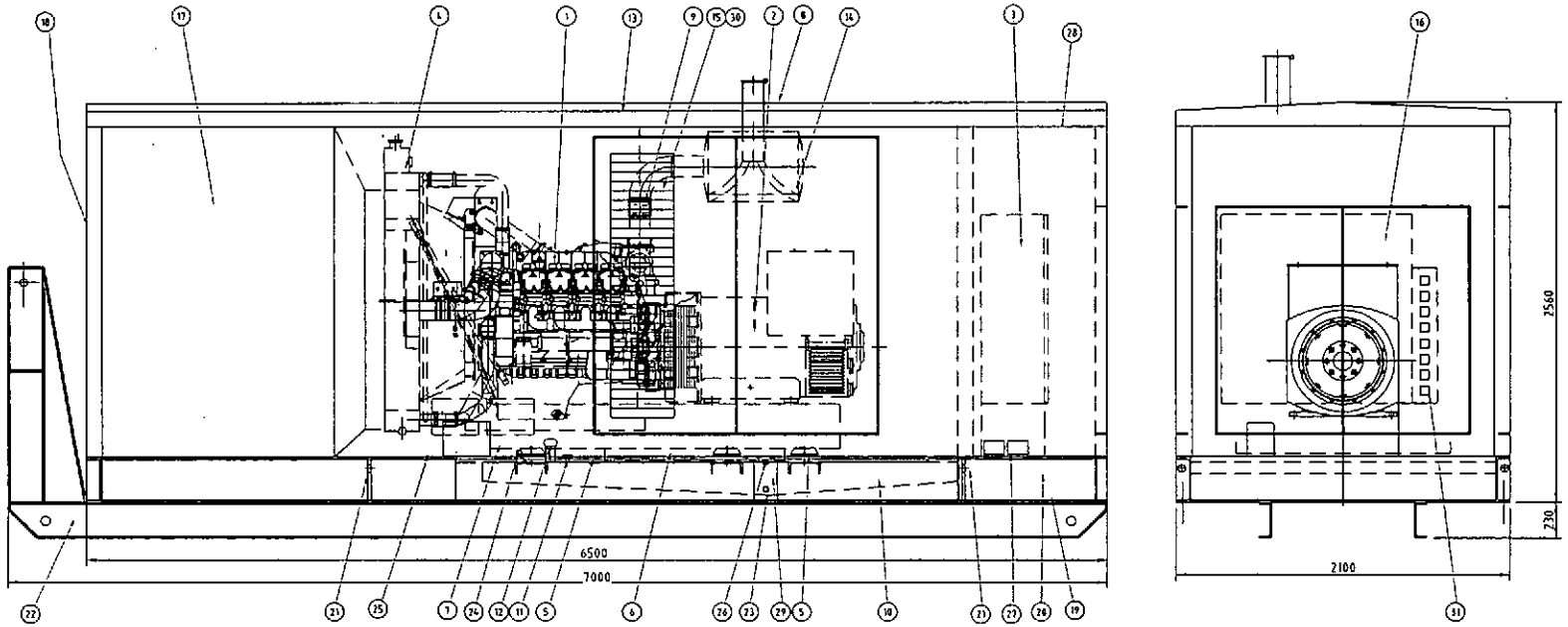

LEGEND	
ITEM	DESCRIPTION
1	ENGINE DEUTZ BF8M1015C
2	ALTERNATOR STAMFORD HC534D
3	CONTROL SWITCHBOARD
4	RADIATOR
5	A/V MOUNTS (6 OFF)
6	ENGINE DRIP TRAY
7	STARTING BATTERY (3B2)
8	EXHAUST SILENCER
9	EXHAUST PIPE FLEXIBLE Ø75
10	FUEL TANK BASE FRAME 1000 L
11	FUEL GAUGE (MECHANICAL)
12	FUEL FILL POINT (INSIDE ENCLOSURE)
13	ACOUSTIC ENCLOSURE (70dbA @ 7m)
14	SIDE ACCESS DOORS (2 OFF)
15	AIR INLET GRILL
16	SWITCHBOARD ACCESS DOORS
17	ACOUSTIC SPLITTER
18	AIR OUTLET GRILL
19	CABLE ENTRY ZONE
20	ANCHOR POINT
21	LIFTING POINTS
22	TRANSPORT SKID
23	FUEL TANK DRAIN (LOCKABLE)
24	OIL DRAIN
25	RADIATOR DRAIN HOSE
26	CATCHMENT TRAY DRAIN
27	CONTROL BATTERIES 2 x 12 VOLT
28	BATTERY CHARGING SOLAR PANEL
29	DRAIN POINT LOCKABLE COVER
30	INSECT SCREEN
31	OUTPUT & CONTROL SOCKETS T.B.A.

NOTE
ENCLOSURE COLOUR : MIST GREEN
BASE TANK COLDUR : MIST GREEN
SKID BASE COLOUR : MIST GREEN

APPROVED FOR CONSTRUCTION

This document is the property of S.E. Power Equipment and is furnished only for the purpose indicated. Provision of this document does not convey permission to build, reproduce or copy it in whole or in part or to manufacture the subject matter shown therein. Such permission is to be granted only by specific authorisation in writing signed by an officer of S.E. Power Equipment

Rev.	Date	DESIGN REVIEW	REV'D P/MGR	APP'D P/MGR	Amendment
0	2.6.03				ISSUE FOR CONSTRUCTIONS
A	2.5.03				APPROVAL ISSUE

Division of Southside Engineering
47 PROPRIETARY ST.
TINGALPA
BRISBANE, QLD. 4173
Phone: (07) 3890 1744
Facsimile: (07) 3390 4631

Client	BRISBANE WATER		
Project	SEWAGE PUMP STATION BACKUP GENSETS		
Drafter RSL	Draft Check	Reviewed Project Manager	Approved Project Director
Designed RSL	Design Review		

Title	SP103 HEROES AVENUE ARRANGEMENT			
Scale 1:25	No in set 1	SE Ref No. TE291	SE Job No	S.E. Drawing No. 14291-011 AMDT 0
Engineer's Ref. No		Client Ref No. 30140-02/03		

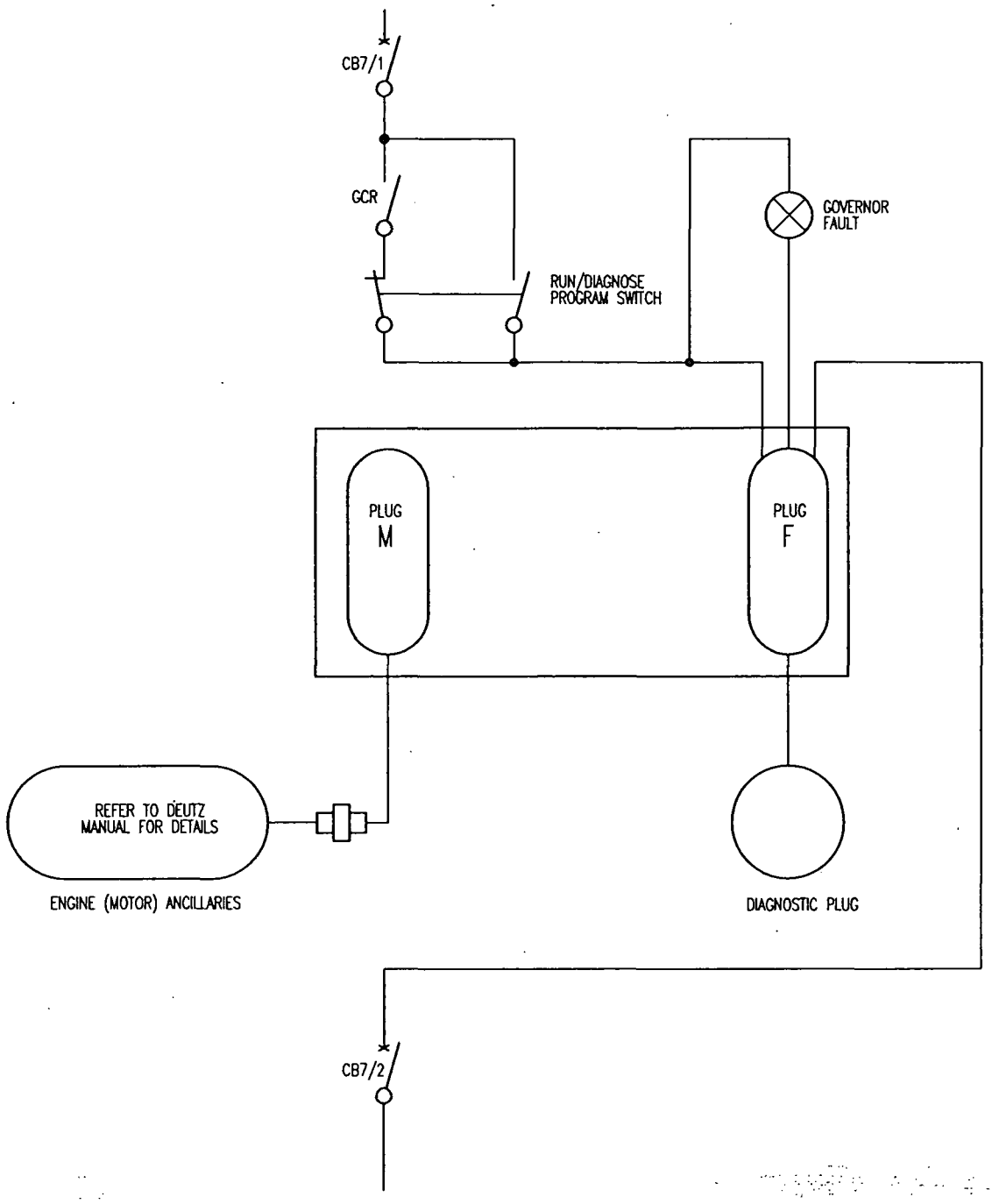

0 1.8.03 AS BUILT

SI POWER EQUIPMENT	EQUIPMENT DATA SHEET	REV No: 0	PROJECT No: 14291-607	DATE: 1.08.03
	TITLE: BCC BRISBANE WATER PUMP STATION BACKUP GENSET EMR GOVERNOR CONTROLS		REF: / PREPARED BY: HJR / RSL	CHECKED BY:
			APPROVED FOR ISSUE: JP	SCALE: 1:1

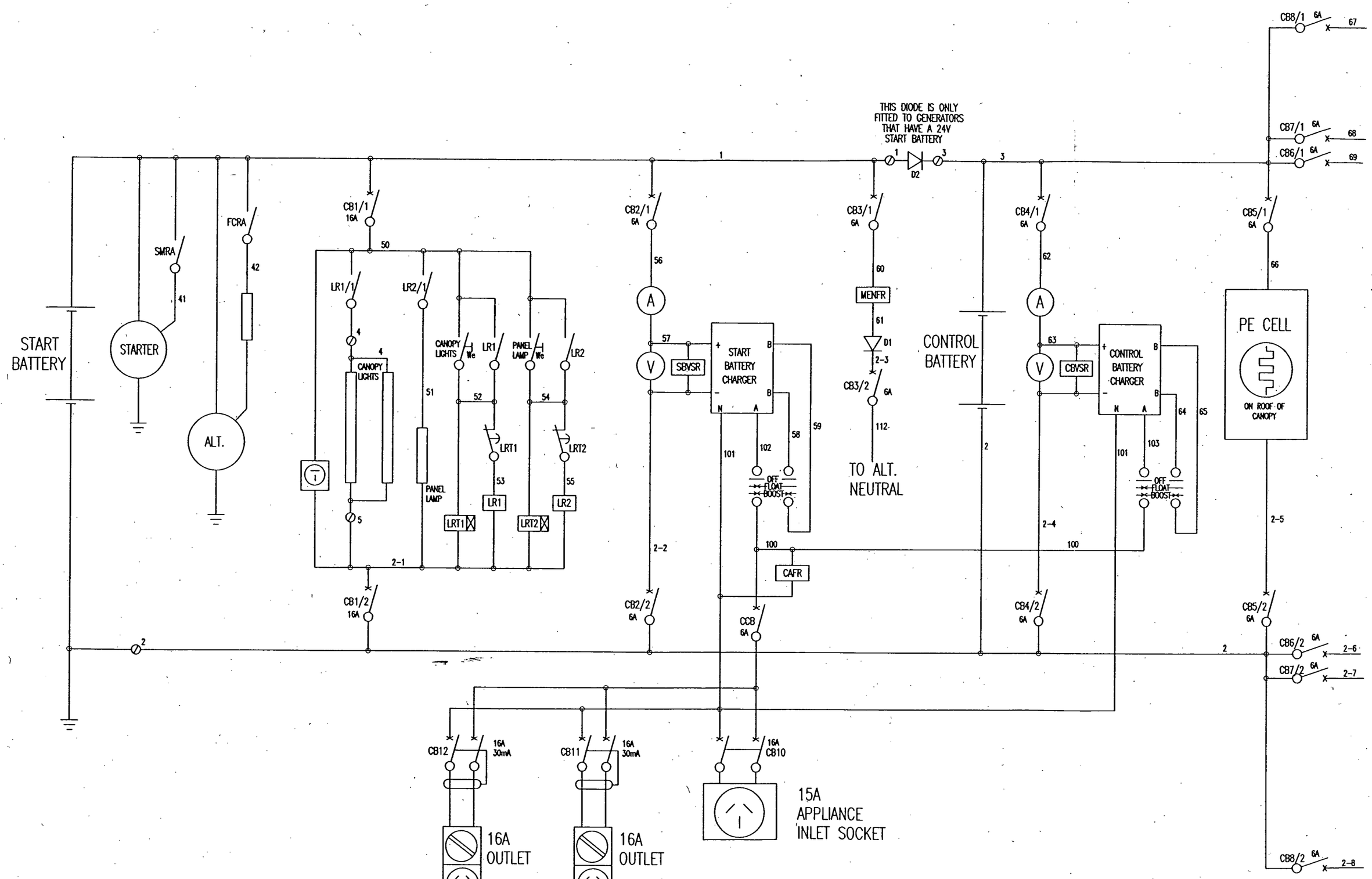

No	DATE	DESIGN REVIEW	REV'D P.MGR	APP'D P.MGR	AMENDMENT
C	1-8-03				AS BUILT
B	15-05-03				DRAWING FINALISED
A	08-05-03				NEW DRAWING

Division of Southside Engineering
47 PROPRIETARY ST.
TINGALPA
BRISBANE, QLD. 4173
Phone: (07) 3890 1744
POWER EQUIPMENT

CLIENT	B.C.C. BRISBANE WATER		
PROJECT	PUMP STATION GENERATOR		
DRAFTER HJR	DRAFTING CHECK	EPAC JOB NUMBER 4000	SE POWER JOB NUMBER 28396
DESIGNED HJR	DESIGN REVIEW		

TITLE: GENERATOR ELECTRICAL SCHEMATIC

SCALE	DRAWING No	No IN SET	AMDT
NTS	14291-02	1 of 5	6

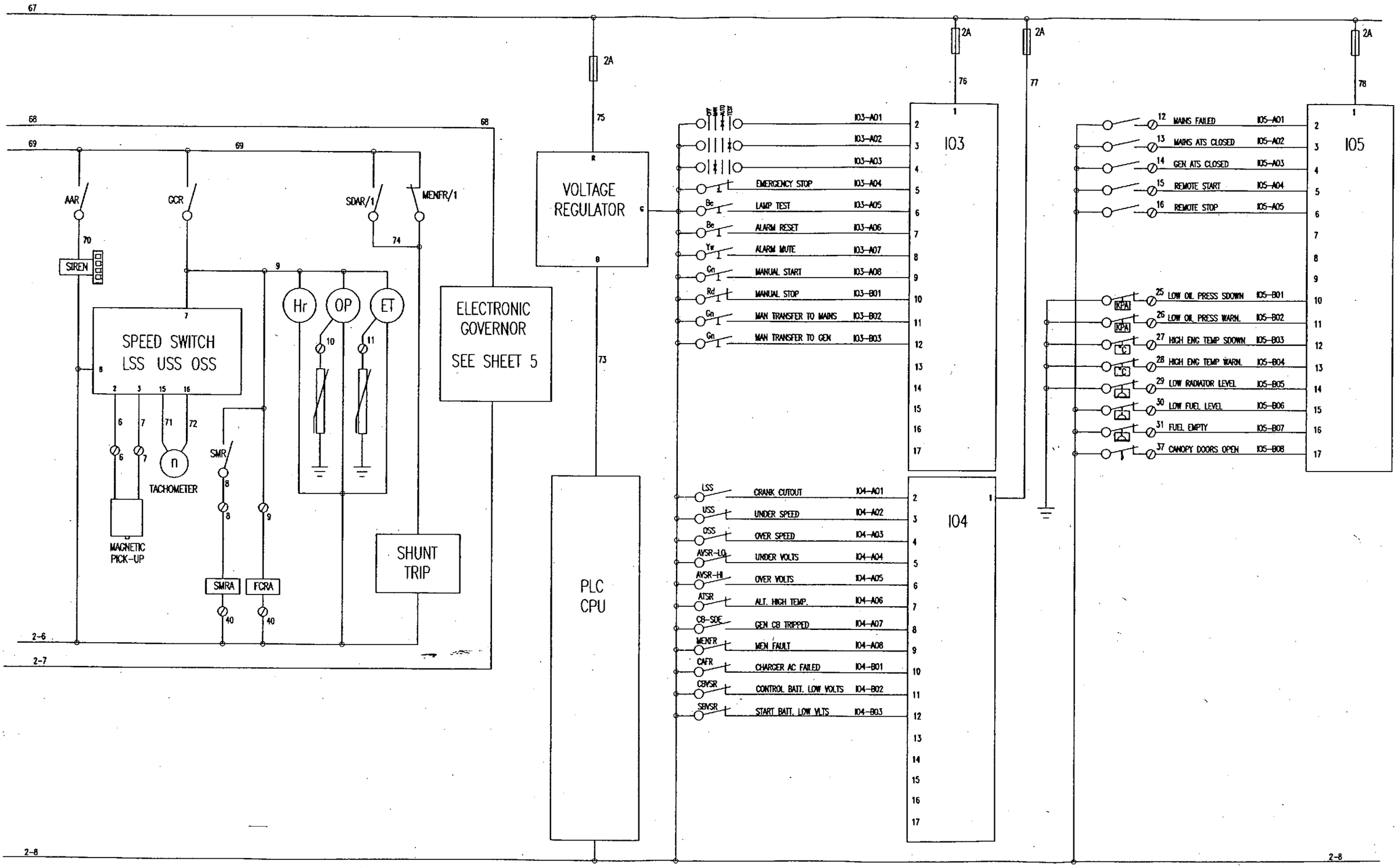

No	DATE	DESIGN REVIEW	REV'D P.MGR	APP'D P.MGR	AMENDMENT
C	1-8-03				AS BUILT
B	15-05-03				DRAWING FINALISED
A	08-05-03				NEW DRAWING

Division of Southside Engineering
47 PROPRIETARY ST.
TINGALPA
BRISBANE, QLD. 4173
Phone: (07) 3890 1744

CLIENT	B.C.C. BRISBANE WATER		
PROJECT	PUMP STATION GENERATOR		
DRAFTER HJR	DRAFTING CHECK	EPAC JOB NUMBER 4000	SE POWER JOB NUMBER 28396
DESIGNED HJR	DESIGN REVIEW		

TITLE: GENERATOR ELECTRICAL SCHEMATIC

SCALE	DRAWING No	No IN SET	AMDT
NTS	14291-02	2 of 5	C

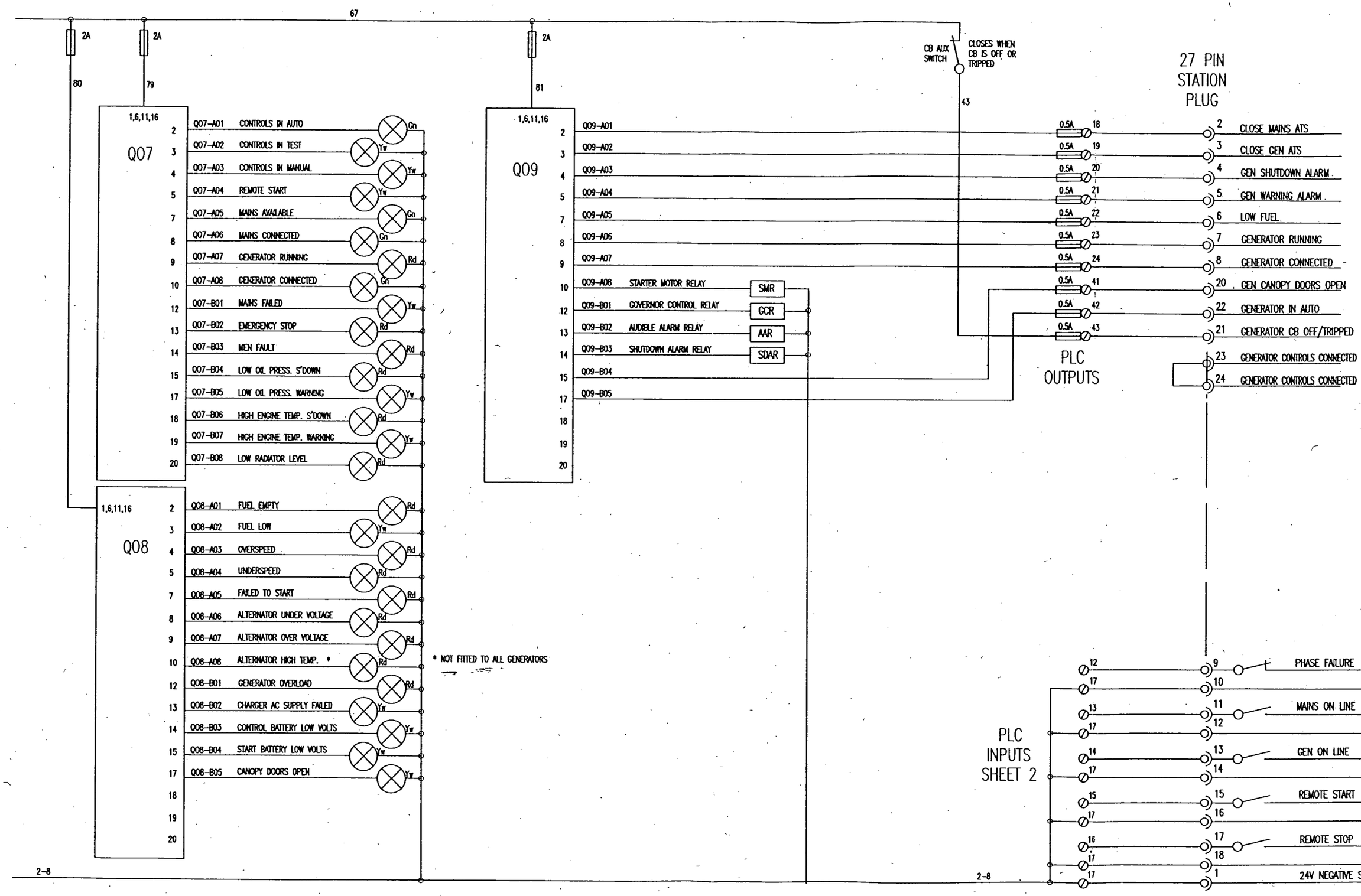

No	DATE	DESIGN REVIEW	REV'D P.MGR	APP'D P.MGR	AMENDMENT
E	10-05-04				27 PIN PLUG REMOTE CONNECTIONS WERE CHANGED TO MATCH SITE WIRING
D	01-08-03				AS BUILT
C	23-07-03				EXTRA REMOTE ALARMS WERE ADDED
B	15-05-03				DRAWING FINALISED
A	08-05-03				NEW DRAWING

Division of Southside Engineering
47 PROPRIETARY ST.
TINGALPA
BRISBANE, QLD. 4173
Phone: (07) 3890 1744

CLIENT	B.C.C. BRISBANE WATER		
PROJECT	PUMP STATION GENERATOR		
DRAFTER HJR	DRAFTING CHECK	EPAC JOB NUMBER 4000	SE POWER JOB NUMBER 28396
DESIGNED HJR	DESIGN REVIEW		

TITLE: GENERATOR ELECTRICAL SCHEMATIC

SCALE	DRAWING No	No IN SET	AMDT
NTS	14291-02	3 of 5	E

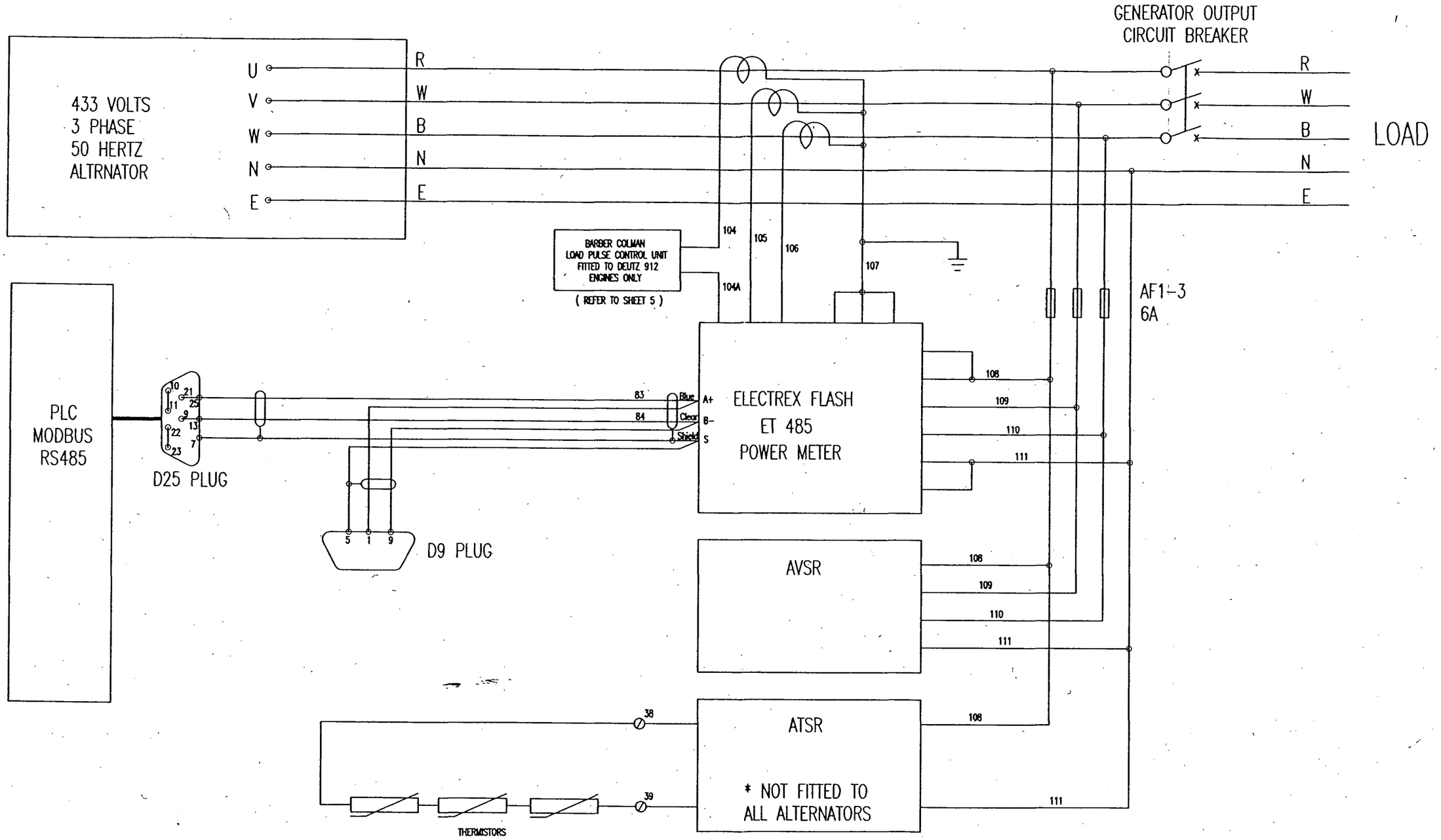

No	DATE	DESIGN REVIEW	REV'D P.MGR	APP'D P.MGR	AMENDMENT
C	1-9-03				AS BUILT
B	15-05-03				DRAWING FINALISED
A	08-05-03				NEW DRAWING

Division of Southside Engineering
47 PROPRIETARY ST.
TINGALPA
BRISBANE, QLD. 4173
Phone: (07) 3890 1744

CLIENT	B.C.C. BRISBANE WATER		
PROJECT	PUMP STATION GENERATOR		
DRAFTER HJR	DRAFTING CHECK	EPAC JOB NUMBER 4000	SE POWER JOB NUMBER 28396
DESIGNED HJR	DESIGN REVIEW		

TITLE: ELECTRICAL SCHEMATIC

SCALE	DRAWING No	No IN SET	AMDT
NTS	14291-02	4 of 5	C

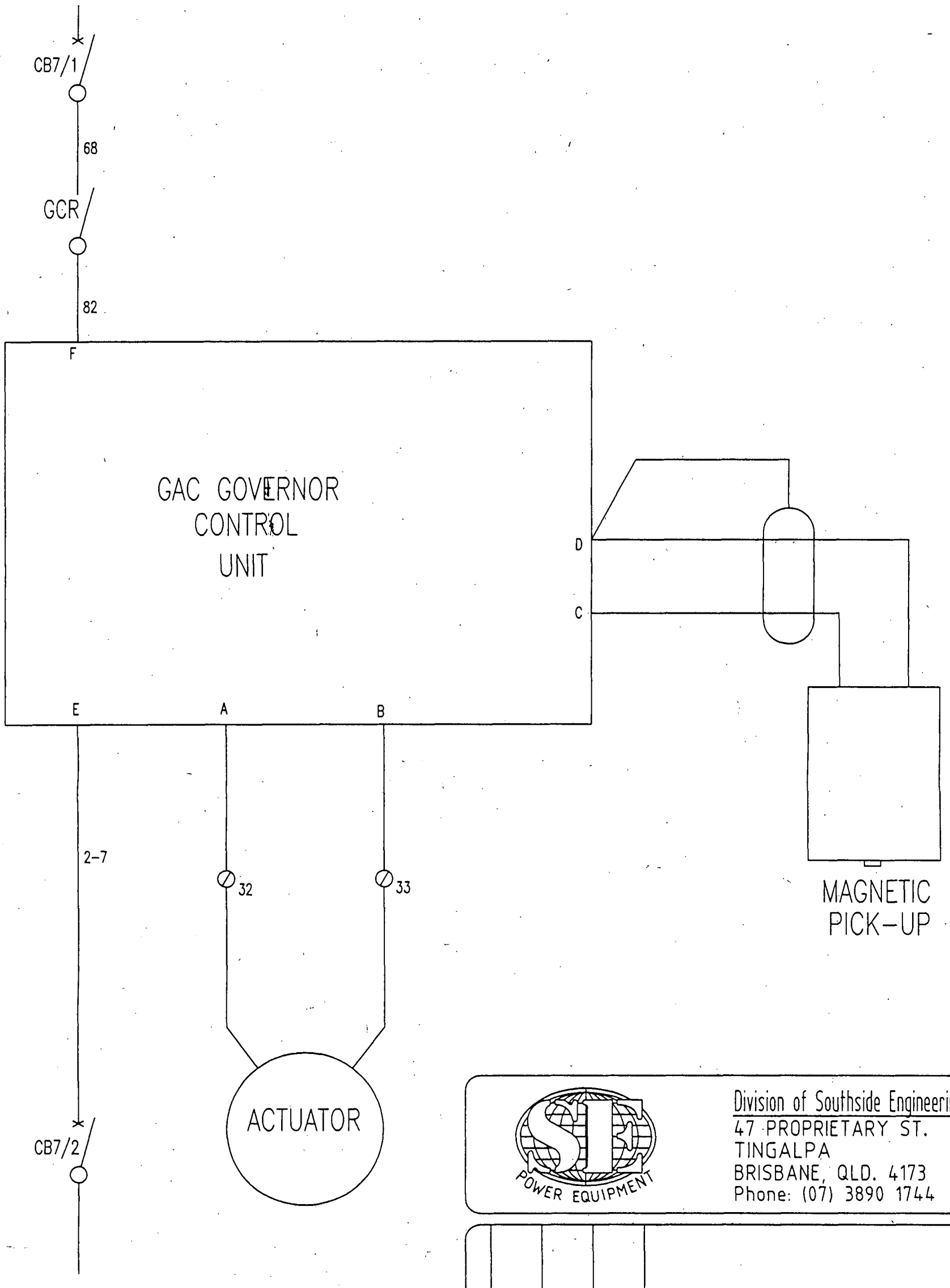

Division of Southside Engineering
47 PROPRIETARY ST.
TINGALPA
BRISBANE, QLD. 4173
Phone: (07) 3890 1744

No	DATE	DESIGN REVIEW	REV'D P.MGR	AMENDMENT
C	1-9-03			AS BUILT
B	15-05-03			DRAWING FINALISED
A	08-05-03			NEW DRAWING

CLIENT	B.C.C. BRISBANE WATER		
PROJECT	PUMP STATION GENERATOR		
DRAFTER HJR	DRAFTING CHECK	EPAC JOB NUMBER 4000	SE POWER JOB NUMBER 28396
DESIGNED HJR	DESIGN REVIEW		

TITLE

GAC GOVERNOR CONTROLS

SCALE	DRAWING No	No IN SET	AMDT
NTS	14291-02	5 of 5	C

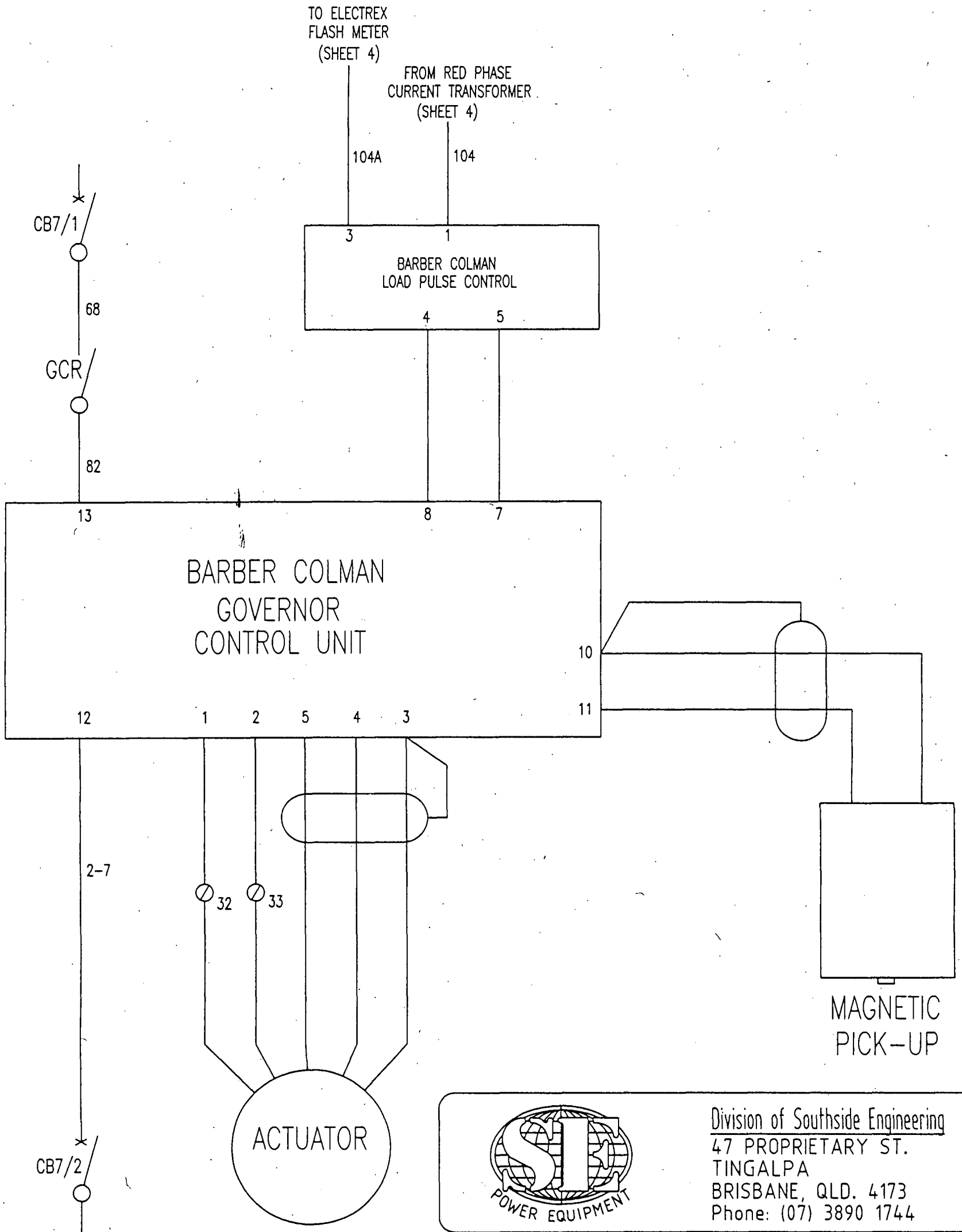

Division of Southside Engineering
47 PROPRIETARY ST.
TINGALPA
BRISBANE, QLD. 4173
Phone: (07) 3890 1744

No	DATE	DESIGN REVIEW	REV'D P.MGR	AMENDMENT
D	1-9-03			AS BUILT
C	14-06-03			LOAD PULSE CONTROL UNIT WAS ADDED
B	15-05-03			DRAWING FINALISED
A	08-05-03			NEW DRAWING

CLIENT: B.C.C. BRISBANE WATER

PROJECT: PUMP STATION GENERATOR

DRAFTER	DRAFTING CHECK	EPAC JOB NUMBER	SE POWER JOB NUMBER
HJR		4000	28396
DESIGNED HJR	DESIGN REVIEW		

TITLE: BARBER COLMAN GOVERNOR CONTROLS

SCALE	DRAWING No	No IN SET	AMDT
NTS	14291-02	5 of 5	D

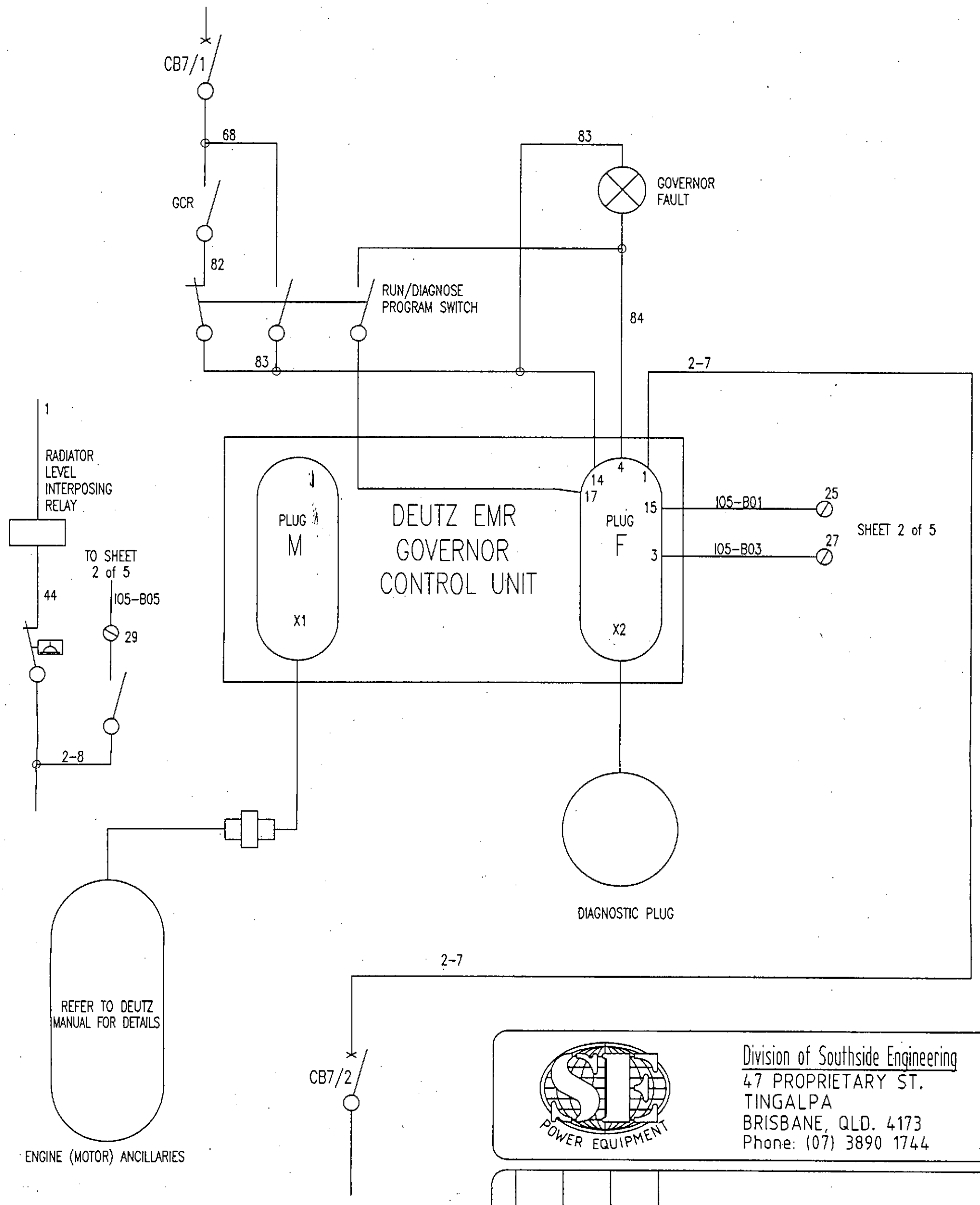

Division of Southside Engineering
47 PROPRIETARY ST.
TINGALPA
BRISBANE, QLD. 4173
Phone: (07) 3890 1744

No	DATE	DESIGN REVIEW	REV'D P.MGR	AMENDMENT
D	1-9-03			AS BUILT
C	15-08-03			RADIATOR LEVEL INTERPOSING RELAY WAS ADDED
B	15-05-03			DRAWING FINALISED
A	08-05-03			NEW DRAWING

CLIENT	B.C.C. BRISBANE WATER		
PROJECT	PUMP STATION GENERATOR		
DRAFTER HJR	DRAFTING CHECK	EPAC JOB NUMBER 4000	SE POWER JOB NUMBER 28396
DESIGNED HJR	DESIGN REVIEW		

TITLE

DEUTZ EMR GOVERNOR CONTROLS

SCALE	DRAWING No	No IN SET	AMDT
NTS	14291-02	4 of 5	D

SE Power Equipment

47 Proprietary Street, Tingalpa, Qld 4173
Telephone: (07) 3890 1744
PO Box 3306 Tingalpa B.C. Qld 4173

DIESEL GENERATOR SET
CONTROL FUNCTION TEST REPORT

SEP 009/B

CLIENT: BRIS WATER SP103 DATE: 25/08/03
SERIAL NO: 0308004 JOB NO: 14291
ENGINE TYPE: BF8M1015C ENG. SERIAL NO: 9147807
ALTERNATOR TYPE: HC534D ALT. SERIAL NO: 34039

GENSET CONTROL FUNCTIONS	FUNCTION	LAMP	REMARKS
Engine High Temp. Alarm	✓	✓	
Engine High Temp. Shutdown	✓	✓	
Low Water Level Alarm	✓	✓	
CB Tripped/Alt., Overload	✓	✓	
Low Oil Pressure Alarm	✓	✓	
Low Oil Pressure Shutdown	✓	✓	
Emergency Stop	✓	✓	
Start Fail Alarm	✓	✓	
Genset Running	✓	✓	
MEN Fault	✓	✓	
Starter Motor Relay	✓	✓	
Fuel Low	✓	✓	
Fuel Empty	✓	✓	
Engine Gauges	✓	✓	
Status Lamps/Controls	✓	✓	
Underspeed Shutdown	✓	✓	
Overspeed Shutdown	✓	✓	
Remote Start/Stop	✓	✓	
Lamp Test	✓	✓	
Alarm Shudown	✓	✓	
Alt Undervolts	✓	✓	
Alt Overvolts	✓	✓	
Charger AC Failed	✓	✓	
Control Batt. Low Volts	✓	✓	
Start Batt. Low volts	✓	✓	
Canopy doors Open	✓	✓	
Audible Alarm/Mute	✓	✓	
Remote ATS Controls	✓	✓	
Alternator High Temperature	✓	✓	

CUSTOMER TESTING OFFICER: TESTING OFFICER: HAYDEN ROTH

47 Proprietary Street
Tingalpa Q 4173
BRISBANE AUSTRALIA

DIESEL GENERATOR SET LOAD TEST REPORT

SEP 0064/D

CLIENT: BRISBANE WATER SP103 DATE: 25/08/03.

SERIAL NO: 0308004 JOB NO/CONTRACT NO: 14291

ENGINE TYPE: BF8M1015C ENG. SERIAL NO: 9147807

ALTERNATOR TYPE: HC534D ALT. SERIAL NO: 34039

GOVERNOR TYPE: EMR STARTER MOTOR: DEUTZ

OVERSPEED TYPE: " UNDERSPEED TYPE: EMR

SHUTDOWN SOLENOID: " HIGH WATER: "

LOW OIL PRESSURE SHUTDOWN: "

KW: 477 + 10% KW: 344 + 10%

TECHNICAN: PAUL HLAVKA. INSPECTOR:

TIME	815	830	900	0930	1000	1030	1045			
OIL PRESSURE	500	500	500	500	450	450	475			
OIL TEMPERATURE	NA	NA	NA	NA	NA	NA	NA			
JACKET WATER TEMPERATURE	0	60	80	80	85	85	80			
?S	0	124	230	356	477	477	0			
VOLTS	240 241 241	✓ ✓ ✓	✓ ✓ ✓	✓ ✓ ✓	✓ ✓ ✓	✓ ✓ ✓	✓ ✓ ✓			
AMBIENT TEMPERATURE	16	16	17	18	18	18	18			
HZ	50	50	50	50	50	50	50			
KW	0	88	166	256	344	344	0			
LOAD%	0	25%	50%	75%	100%	100%	0			
REMARKS										

Generator_Load_Test_Report.doc

SE POWER EQUIPMENT

~~GEN~~ GENERATOR SET SEP 0023/ D

SOUND PRESSURE LEVEL TEST REPORT

47 Proprietary Street
Tingalpa Q 4173
BRISBANE AUSTRALIA

CLIENT: BRIS. WATER SP103 DATE: _____

SERIAL NO: 0308004 JOB NO: 14291

ENGINE TYPE: BF8M1015C ENG. SERIAL NO: 9147807

ALTERNATOR TYPE: HC534D ALT. SERIAL NO: 34039

SOUND LEVEL INSTRUMENT: _____

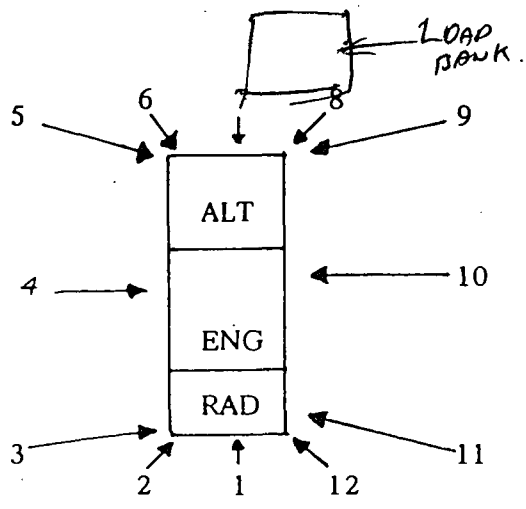

Position Layout

Remarks:

Distance: 7 m

Height: 1.5 m

POSITION	SOUND LEVEL dB(A)	LOAD %				
		25	50	75	100	110
1	65			✓		
2	65			✓		
3						
4	68			✓		
5						
6						
7						
8						
9						
10						
11						
12	65			✓		
Average						

QUALITY ASSURANCE OFFICER: _____

CUSTOMER TESTING OFFICER: _____

TESTING OFFICER: PAUL HLAVKA.

WITNESS TESTING OFFICER: DAVID COOPER.

47 Proprietary Street
Tingalpa Qld 4173
PH: (07) 3890 1744

SEP0084

TRANSIENT LOAD RESPONSE TEST SHEET

Transient response for load changes: Load PF 0.8

% Change Electrical kW	0-25	0-50	0-75	0-100	100-0	75-0	50-0	25-0
Change in Electrical kW								
% Change HZ		2.4	3.5		1.9	1.3	.1	
% Change Volts		1	2	5	2	2	1	
Recovery secs		3	4	5	3.	3	2	

CLIENT: BRIS. WATER SP103

JOB NO: 14291

S/N: 0308004

47 Proprietary Street
Tingalpa Q 4173
BRISBANE AUSTRALIA

SEP 0013

FINAL INSPECTION CHECKLIST

This form is to be completely filled out before any generating set leaves the factory.

It is to be signed by the person doing the inspection and by their immediate supervisor. In the case of a non-standard job it must also be signed by the Special Projects Manager or the Engineering Manager.

A copy of this form is to be sent out with the plant concerned.

Please neatly tick in the boxes provided where applicable and note any comments in the space provided.

MODEL: B.W. SP103 SERIAL NO: 0308004 ENGINE NO: 9147807

JOB NO: 14291 DATE: 28/08/03 CUSTOMER: B.W.

==========

BASE

(1) All welds continuous, neat and clean. ☑
(2) All bolts tightened. ☑
(3) Bearers completely secured. ☑
(4) No sharp corners. ☑

RADIATOR

(1) Radiator correctly mounted. ☑
(2) All pipework included and secure. ☑
(3) Drain plug in place. ☑
(4) Water removed from radiator. ☑
(5) Clamps on hoses tight. ☑

ENGINE

(1) Fan is correctly mounted. ☑
(2) All guards in place and secure. ☑
(3) Wiring loom is correct to drawing, securely fixed and marked and is terminated in an appropriate terminal box. ☑
(4) Battery leads attached and secure and long enough for termination to battery. ☑
(5) Air cleaner is properly mounted. ☑
(6) Magnetic pickup is fitted and set to correct depth. ☑
(7) Exhaust pipe and silencer (where required) are fitted correctly. ☑
(8) Dip stick in place. ☑
(9) Oil removed from engine. ☑
(10) All fuel and oil unions completely tightened. ☑
(11) All ordered options are fitted and function correctly. ☑
(12) All parts secure, no damage. ☑
(13) All earths less than 0.1 ohms. ☑
(14) Cables and hoses secure for transport. ☑

CONTROL SYSTEM (where applicable)

(1) Control functions as ordered. ☑
(2) Control is mounted correctly. ☑
(3) All leads, terminals, fuses, printed circuit boards and switchgear are completely secure and marked correctly. ☑
(4) Dust seals are fitted around doors. ☑
(5) Doors hinged correctly. ☑
(6) All earths less than 0.1 ohms. ☑
(7) Red Danger labels in cubicle. ☑

FINAL INSPECTION CHECKLIST

CONTROL SYSTEM (cont)

(8) Perspex shield secure, clean and no sharp corners. ☑
(9) Cables correct, no damage. ☑
(10) Locks and keys satisfactory. ☑

ALTERNATOR

(1) Alternator is correctly mounted. ☑
(2) Alternator leads are correctly mounted inside terminal box and marked correctly. ☑
(3) A.V.R. is mounted, connected properly and set to correct setting. ☑
(4) Coupling and adaptor are properly fastened between engine and alternator with correct size and tensile grade bolts. ☑
(5) All options ordered are fitted and function properly. ☑
(6) Alternator is correctly wired for the appropriate voltage as per either Order or Bills of Material. ☑
(7) Earth stud fitted. ☑

FINISH

(1) Plant is painted to correct colour. ☑
(2) All blemishes in finish, especially paint runs, are completely removed. ☑

GENERAL INSPECTION

(1) Genset is manufactured to correct engine/alternator/radiator/bases configuration as specified on Bill of Materials. ☑
(2) All documents are in a sealed plastic bag and secured inside alternator terminal box. ☑
   a) Engine Handbook
   b) Alternator Handbook
   c) Warranty Card
   d) Packing List
   e) Test Sheet
(3) No Oil/No Water label is attached to positive battery lead. ☑
(4) All labels are straight and in correct location. ☑

SIGNED: PAUL HLAVKA INSPECTOR

_____ QUALITY ASSURANCE

COMMENTS: _____