Bottom of Handset:

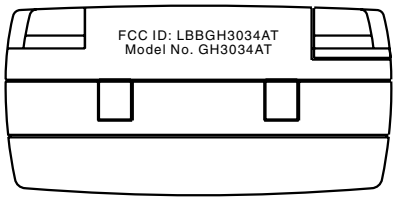

3034BL
06/06/2002
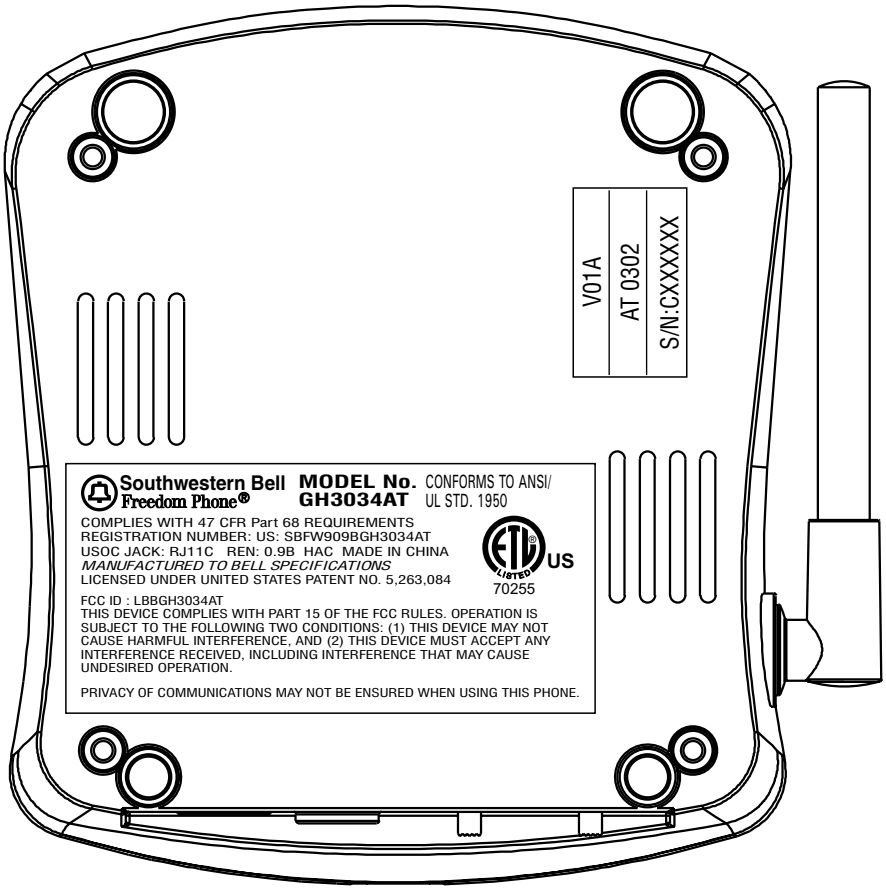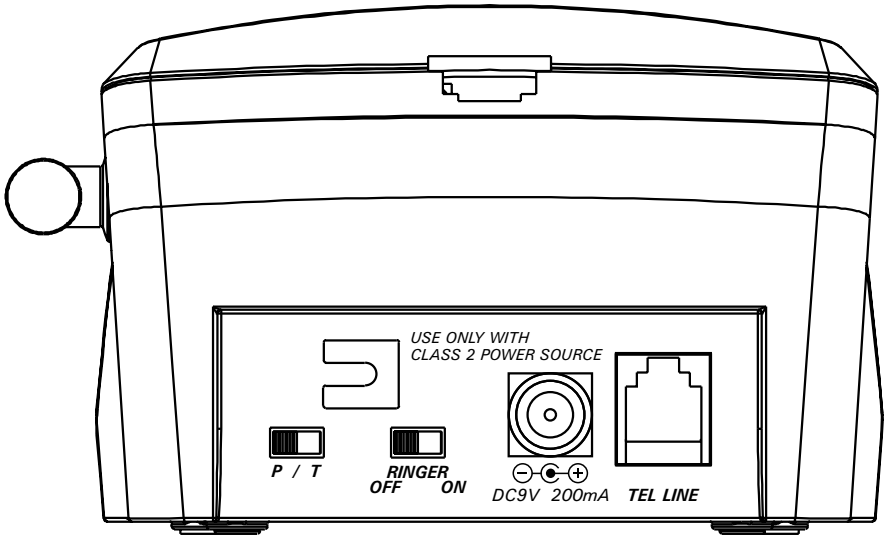
Bottom of Base Unit: