Bottom of Handset:

22mm x 3mm

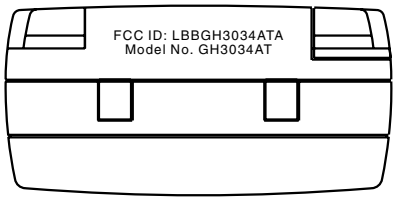

3034BL
12/09/2002

Bottom of Base Unit:
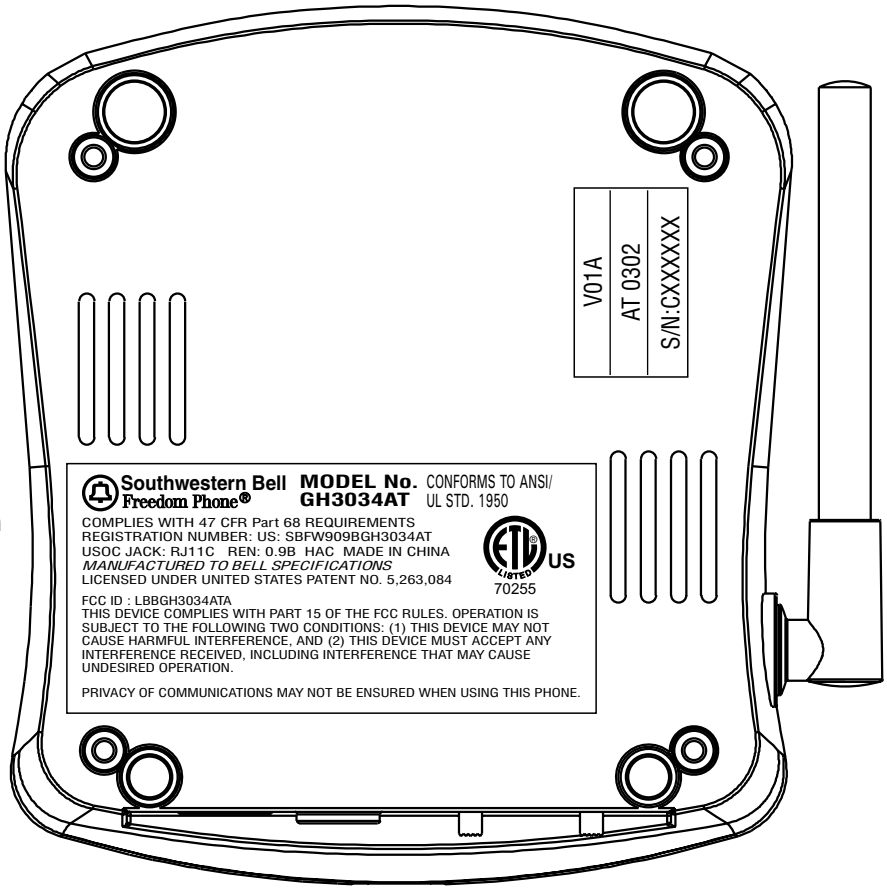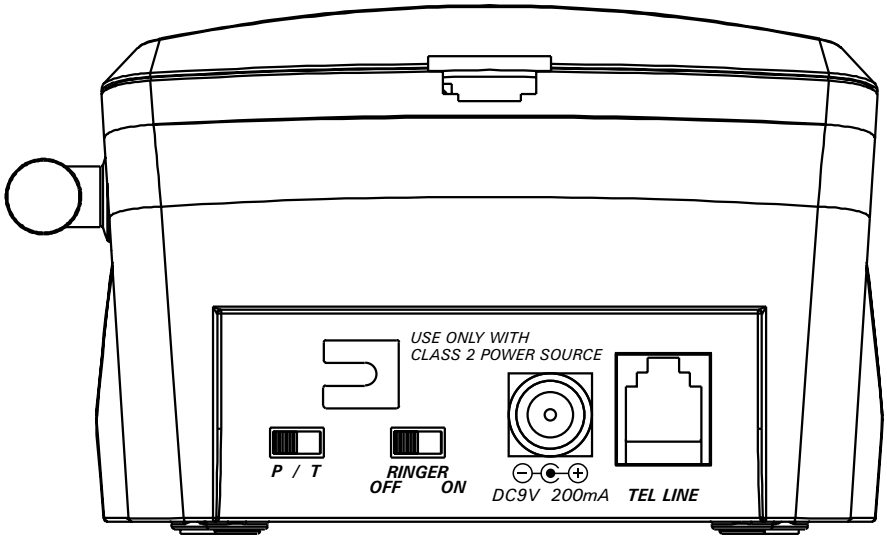
70mm x 33mm