OREGON®

2019

2019

2019 Table of Contents

Outdoor Power Equipment OPE

40V MAX Cordless Tools. 4–29
PowerNow™ Lithium Ion Battery Packs, CS300 Chainsaw, LM300 Lawn Mower, LM400 Lawn Mower, Cordless Multi-Attachment System, BL300 Hand-Held Blower, ST275-GSL Trimmer/Edger, PS250 Pole Saw, HT250 Hedge Trimmer, WL275 Portable Light, Battery Chargers, CS1400 & CS1500 Corded Chainsaws, Replacement Parts and Accessories, Point of Purchase Displays

120V Professional Series 30–37
BL120VX Leaf Blower, ST120VX String Trimmer, EG120VX Edger, EHT120VX Hedge Trimmer, Battery Packs, Batteries, 120V Battery Charging

Log Splitters 38–47
22-Ton, 28-Ton, 28-Ton with EXtend Split™, 35–Ton, Kinetic, and Replacement Parts

Forestry FOR

1 **ANSI, Quick Look Guide, Guide Bar and Saw Chain Application Chart** 2–101
ANSI Standard and Oregon® Saw Chain Classification Chart Quick Look Guide, Guide Bar and Saw Chain Application Chart, Ordering Oregon Saw Chain, Overview of Packaging Changes, Guide Bar and Saw Chain Combos

2 **Saw Chain** 102–147
PowerCut™ 70-Series EXL, SpeedCut™ System, Features and Terminology, Saw Chain for High-Performace Chainsaws: PowerCut™, SpeedCut, VersaCut™, ControlCut™, DuraCut™, and RipCut™, Saw Chain for Carving: Sculptor™, Saw Chain for Reliable Performance: AdvanceCut™, Speciality Saw Chain: PowerSharp®, Cross-Reference Chart, Sharpening, Grinding, and Replacement Parts, Troubleshooting

3 **Guide Bars** 148–179
Overview, Light-Weight Professional Guide Bars: SpeedCut, VersaCut, and ControlCut, Professional Guide Bars: PowerCut and DuraCut, Occasional User Guide Bars: AdvanceCut and Single Rivet, Carving Guide Bars, Replacement Parts, and Chainsaw Mounts, Troubleshooting

4 **Sprockets** 180–211
Spur and Rim Sprockets and Part Numbers, Applications by Chainsaw Model, Applications by Oregon Part Number, Troubleshooting

5 **Chainsaw Parts** 212–228
Replacement Parts for Chainsaws

Accessories: Shop, Field, & Safety SFS

I **Shop Items, Filing and Accessories** 2–23
Point-of-Purchase Displays, Saw Chain Filing Tools, Guide Bar Grease, Dresser, Cleaners and Covers, Forestry Felling Wedges, Arborist Saws, Levers, Lifting Picks and Tongs, Screnches

II **Shop Tools** 24–71
Saw Chain Auto Grinders, Bench Grinders, Spinners, Breakers, Accessories, and Replacement Parts, Lawn Mower Blade Grinders, Accessories, and Replacement Parts, Mower Lifts, Jacks, and Ramps, General Shop and Tire Tools

III **Field Supplies** 72–107
Commercial Equipment Racks and Accessories, Mower Sulkies, Fuel and Oil Supplies, Storage, and Containment, Lubricants, Grease, Cleaners, Solvents, Sealants, and Glues, Hardware Assortments, Nuts, Bolts, and Washers

IV **Safety** 108–128
Safety Equipment, Forestry, Gloves, Safety Eyewear, Respirator Masks, and Hearing Safety

Lawn & Garden LG

★ **2019 New Products, Illustrated Parts Lists.** 2–175
Cautions and Warnings, 2019 New Products, Illustrated Parts Lists

A/B **Replacement Parts A to B.** 176–591
Air Filters, Bearings and Bushings, Belts, Blade Adaptors, Blades: Overview, by Length, Universal, OEM Replacements, and Edgers

C/N **Replacement Parts C to N.** 592–811
Carburetor Parts, Centrifugal Clutches, Chain Roller Parts, Chainsaw and Cut-Off Saw Parts, Commercial Parts, Control Cables, Drive Parts, Electrical Parts, Engine Parts, Fuel Line and Accessories, Grass Bags, Hedge trimmer Parts, Ignition Parts, LInkage, Jacks, and Hardware, Miscellaneous Parts, and Mufflers

O/S **Replacement Parts O to S.** 812–951
Oil Filters, Pulleys, Seats, Snow Thrower Parts, Spark Plugs, Spindles, Sprayers, Springs, Starters, Starter Parts, Starter Rope, Steering Parts, and Switches

T/W **Replacement Parts T to W** 952–1047
Tiller Parts, Tires, Tubes, and Tire Chains, Trimmer Lines and Heads, Trimmer Brush Cutter Blades Trimmer and Blower Parts, and Wheels

X **Cross References** 1048–A48
Briggs and Stratton X-Reference, OEM X-Reference, Aftermarket X-Reference

OUTDOOR POWER EQUIPMENT

40V & 120V Cordless Tools Intro . . . . OPE 6–7
40V MAX* Cordless Tool System . . . . OPE 8–9
PowerNow™ Lithium Ion Battery Packs . OPE 10
Cordless Multi-Attachment System . .OPE 11–14
CS300 40V MAX* Chainsaw. . . . . OPE 15
LM300 40V MAX* Lawn Mower. . . . . OPE 16
LM400 40V MAX* Lawn Mower. . . . . OPE 17
BL300 40V MAX* Hand-Held Blower . . . OPE 18
ST275-GSL 40V MAX* Trimmer/Edger . . OPE 19
PS250 40V MAX* Pole Saw . . . . . OPE 20
HT250 40V MAX* Hedge Trimmer . . . . OPE 21
WL275 40V MAX* Portable Light . . . . OPE 22
40V MAX* Accessories . . . . . OPE 23
CS1400 & CS1500 Corded Chainsaws. . . OPE 24
Replacement Parts . . . . . OPE 24–27
Point of Purchase Displays . . . . . OPE 27–29

120V Professional Series Intro . . . . OPE 30–31
BL120VX Leaf Blower . . . . . OPE 32
ST120VX String Trimmer . . . . . OPE 33
EG120VX Edger . . . . . OPE 34
EHT120VX Hedge Trimmer . . . . . OPE 35
Battery Pack, Batteries, & Charging . OPE 36–37

Log Splitter Family . . . . . OPE 38
22-Ton Log Splitter . . . . . OPE 39
28-Ton Log Splitter . . . . . OPE 40
28-Ton Log Splitter with EXtend Split™ . OPE 41
35-Ton Log Splitter . . . . . OPE 42
Kinetic Log Splitter . . . . . OPE 44–45
Log Splitter Replacement Parts . . . OPE 46–47

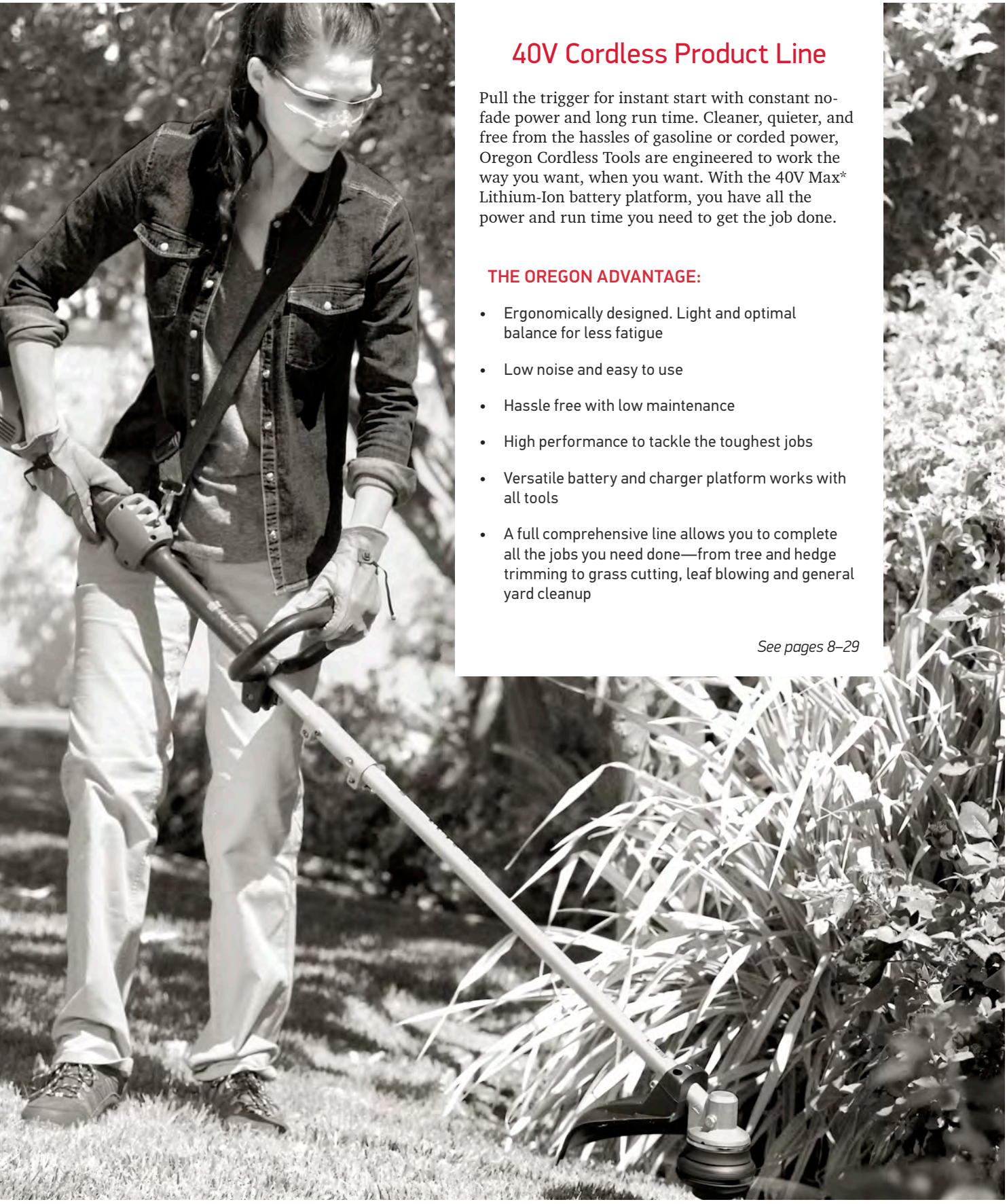

40V Cordless Product Line

Pull the trigger for instant start with constant no-fade power and long run time. Cleaner, quieter, and free from the hassles of gasoline or corded power, Oregon Cordless Tools are engineered to work the way you want, when you want. With the 40V Max* Lithium-Ion battery platform, you have all the power and run time you need to get the job done.

THE OREGON ADVANTAGE:

- Ergonomically designed. Light and optimal balance for less fatigue
- Low noise and easy to use
- Hassle free with low maintenance
- High performance to tackle the toughest jobs
- Versatile battery and charger platform works with all tools
- A full comprehensive line allows you to complete all the jobs you need done—from tree and hedge trimming to grass cutting, leaf blowing and general yard cleanup

See pages 8–29

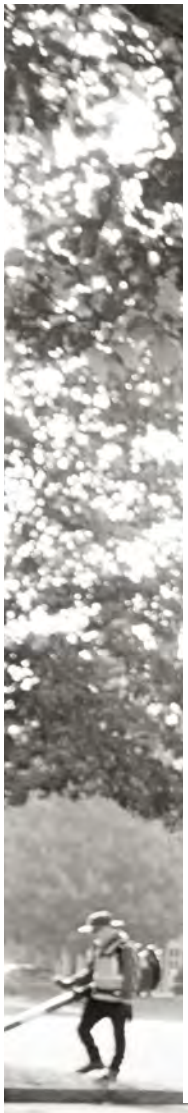

120V Professional Series™

The Oregon 120V Professional Series was developed specifically with the professional landscaper in mind. The platform combines cutting-edge technologies to finally offer the power and durability of traditional tools with all the advantages of battery power. With the ability to run a full day of real commercial work with minimal, if any, need for a fresh battery, this equipment provides the muscle needed to finish the job.

THE OREGON ADVANTAGE:

- Battery capacity for a full day's work
- Efficient brushless electric power to match gas
- Smart controller to manage tool performance – automatically
- IP56 weather-ready rating to withstand life in the outdoors rain or shine
- Integrated dashboards communicate charge level and equipment diagnostics
- Advanced noise and vibration damping technology integrated into all tools
- Robust build quality to endure real professional-grade use

See pages 30–37

40V* MAX LITHIUM-ION

Oregon® Cordless Tool System

INSTANT START
- No Pull Cords
- No Warm-Up Required
- No Gas-Oil Mixing

COMFORT AND CONTROL
- Ergonomic Design
- Light-Weight and Balanced
- Low Vibration

LOW NOISE
- Significantly Quieter than Gas-Powered Motors
- Silent Between Cuts/ Trimming
- Start Early and Work Late

ZERO EMISSIONS
- Environmentally Friendly
- No Gas Fumes

LESS DOWN TIME
- Fewer Repairs Needed (Compared to Gas Engines)

HT600

EX600

HT250

EG600

BL300

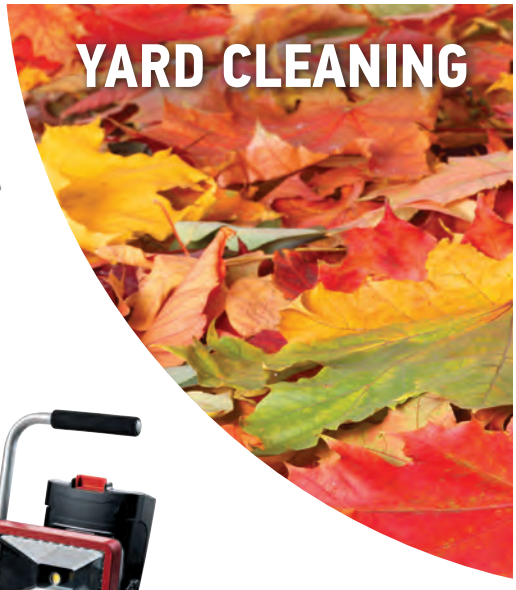

110V Corded

See page 24

WL275

*Fully charged battery voltage measured without a workload is 40 volts. Nominal voltage is 36 or 37 depending on battery used.

A Better Yard Starts Here

ONE BATTERY, ONE POWERFUL SYSTEM

CS300

PS250

EX600

PS600

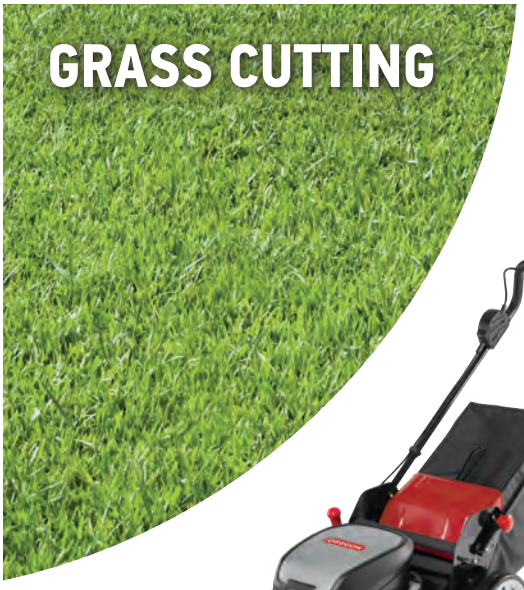

ST600

ST275-GSL

LM400

LM300

PowerNow™ Lithium Ion Battery Packs

The Oregon® battery platform provides all the power you need to get the job done. Our PowerNow premium cell technology ensures a long run time. Superior construction makes all our batteries rugged and durable.

PREMIUM CELL TECHNOLOGY
Light-weight premium cells combine reliable performance & energy capacity.

CONSTANT NO-FADE POWER
Maintain constant power through discharge.

RETAINS CHARGE
Retains a charge even after months of storage.

CONSISTENT CAPACITY
Charge maintenance and full discharge is not necessary to retain consistent capacity throughout the life of the battery (no memory effect).

2.6 Ah = up to 325 cuts
2"-3" diameter wood on the PS250 Pole Saw

B425E

OREGON	Description
585527	Battery Pack, 2.6 Ah, Model B425E

4.0 Ah = up to 500 cuts
2"-3" diameter wood on the PS250 Pole Saw

B600E

OREGON	Description
548208	Battery Pack, 4.0 Ah, Model B600E

6.0 Ah = up to 750 cuts
2"-3" diameter wood on the PS250 Pole Saw

B650E

OREGON	Description
583684	Battery Pack, 6.0 Ah, Model B650E

C650 Battery Charger

OREGON	Description
594076	Replacement C650 - Charger

C750 Rapid Battery Charger

OREGON	Description
548185	Replacement C750 - Rapid Charger

	C650 Standard Charger	C750 Rapid Charger
B425E	90 min.	30 min.
B600E	140 min.	60 min.
B650E	240 min.	90 min.

Cordless Multi-Attachment System

A versatile and powerful system designed for homeowners wanting to save time and money. The Oregon® Multi-Attachment System puts you in charge — choose only the attachments you need and build a customized system for you and your yard. The Oregon attachments work seamlessly with the Powerhead, and the brushless motor delivers sustainable power. Within seconds, you can switch from pruning your trees to trimming the grass around your flower bed.

POWERFUL

- Brushless motor delivers more power and enhanced torque for higher efficiency.
- Plenty of power to trim and edge a large yard.
- Consistent lithium ion performance.

EFFICIENT

- A single power source — no need to maintain multiple gas engines.
- Use any Oregon 40V MAX* battery.

VERSATILE

- One system that uses your choice of Oregon interchangeable attachments.
- Seamlessly switch from high-volume jobs to precision work.
- Swap out one tool for another within seconds.

STORABLE

- Takes up less space in your garage or shed.
- Fits easily in a truck bed or cargo space.
- Lighter weight makes it easy to move.

1 Powerhead

4 Attachments

POLE SAW

STRING TRIMMER

EDGER

EXTENDED HEDGE TRIMMER

40V MAX LITHIUM-ION

Cordless Multi-Attachment System

PH600 Powerhead

OREGON	Description
590986	Multi-Attachment Powerhead - Tool only no attachment, no battery, no charger
594067	Multi-Attachment Powerhead - E6 Kit 2.6 Ah battery, standard charger
594068	Multi-Attachment Powerhead - A6 Kit 4.0 Ah battery, standard charger
594075	Multi-Attachment Powerhead - R7 Kit 6.0 Ah battery, rapid charger

SPECIFICATIONS

- Brushless motor
- Compatible with all Oregon 40V MAX* batteries
- Variable speed trigger
- Transportation lock out
- Harness included
- Weighs 9.7 lbs (with battery)

PS600 Pole Saw - 590990

6.0 Ah = up to 750 cuts
4.0 Ah = up to 500 cuts
2.6 Ah = up to 325 cuts

SPECIFICATIONS

- 10" Oregon bar
- 1/4 pitch Oregon chain 25AP
- Length 6'8"
- Length with EX600 extension 8'11"
- Oil tank capacity 3.4 oz (100 ml)
- Only 4 lbs

EX600 Extension- 590988

SPECIFICATIONS

- For Oregon Hedge Trimmers and Pole Saw Multi-attachments
- 28" (70 cm)
- Only 1.4 lbs

Cordless Multi-Attachment System

HT600 Extended Hedge Trimmer - 590991

6.0 Ah = 65 to 70 min
4.0 Ah = 45 to 50 min
2.6 Ah = 30 to 35 min

SPECIFICATIONS

- 15" (38 cm) blade
- Length 7'4"
- Length 9'7" with EX600 extension
- 3/5" (15 mm) tooth spacing
- 120º rotation, 7 positions
- Only 5.5 lbs

ST600 String Trimmer- 590992

6.0 Ah = up to 30 min
4.0 Ah = up to 20 min
2.6 Ah = up to 15 min

SPECIFICATIONS

- 14" (36 cm) cutting diameter
- Gator® SpeedLoad™ head
- .080" Gator SpeedLoad line
- 5500 r/min.
- Only 3.7 lbs

EG600 Edger - 590989

6.0 Ah = up to 250 yards
4.0 Ah = up to 150 yards
2.6 Ah = up to 100 yards

SPECIFICATIONS

- 8" (20 cm) cutting blade
- Oregon blade
- Only 5 lbs

How to Choose Your System

#1

PICK YOUR POWER KIT

Powerhead
Tool Only
If you already have an Oregon® battery and charger

Powerhead kit E6
Powerhead
2.6 Ah Battery
Standard Charger

Powerhead kit A6
Powerhead
4.0 Ah Battery
Standard Charger

50% more run time than the E6 kit

Powerhead kit R7
Powerhead
6.0 Ah Battery
Rapid Charger

130% more run time than the E6 kit and faster recharge time with the rapid charger

#2

PICK YOUR ATTACHMENTS

PS600 ST600 EG600 HT600

ACCESSORIES

Get an extension ($39) for your Multi-Attachment Pole Saw and Multi-Attachment extended Hedge Trimmer.

CS300 Chainsaw

40V MAX LITHIUM-ION

6.0 Ah = up to 600 cuts
4.0 Ah = up to 400 cuts
2.6 Ah = up to 250 cuts
In 2"-3" material.

The Oregon® chainsaw starts instantly and easily cuts through trees and tree limbs. The brushless motor delivers a powerful combination of speed and torque, and our premium 40V MAX* battery ensures zero emissions. Sharpen the chain in seconds with the built-in PowerSharp® system.

OREGON	Description
572627	Chainsaw CS300 - Tool Only 40V MAX* chainsaw, 16" (40 cm) guide bar, PowerSharp chain
572626	Chainsaw Kit CS300 - E6 2.6 Ah battery, standard charger
572625	Chainsaw Kit CS300 - A6 4.0 Ah battery, standard charger
586622	Chainsaw Kit CS300 - R7 6.0 Ah battery, rapid charger

HIGH-PERFORMANCE
The chainsaw's innovative brushless motor delivers high power and torque. You can quickly and easily adjust the chain with the tool-less tensioner.

ONBOARD POWERSHARP
Sharpen on the saw, and on the job, in seconds.™

ERGONOMICALLY DESIGNED
Weighing only 12 lbs, the chainsaw is designed to distribute weight evenly for easy handling.

SPECIFICATIONS
- 16" (40 cm) bar length.
- Automatic oiler with 4.1 oz tank capacity.
- No load chain speed 2796 fpm.
- Only 12 lbs (with battery).

PowerSharp Sharpening System

With the built-in PowerSharp sharpening system, there's no more downtime due to dull chain. Simply pull the PowerSharp lever for 3–5 seconds and the chain works like new. PowerSharp: sharpen on the saw, on the job, in seconds.

(see pages 136-137 of the FOR section of the catalog for more detail)

LM300 Lawn Mower

40V MAX LITHIUM-ION

6.0 Ah = up to 7000 ft²
4.0 Ah = up to 5000 ft²
Works with all Oregon batteries

The LM300 cuts large grass areas quickly and efficiently. The instant start and 6 adjustable cutting positions allow you to work in every season and on every type of lawn. The brushless motor, battery, and debris bag give you the power and capacity to clear your yard easily and efficiently.

OREGON	Description
591083	Lawn Mower LM300 - Tool only
591082	Lawn Mower Kit LM300- A6 4.0 Ah battery, standard charger
591081	Lawn Mower Kit LM300 - R7 6.0 Ah battery, rapid charger

GREAT FOR SMALL TO MEDIUM YARDS

The LM300 starts instantly and makes cutting time more enjoyable. The brushless motor offers a combination of high-torque and efficiency, offering a quality cut and long run time (up to 7000 ft² with a full battery charge).

LIGHT-WEIGHT/OPTIMAL BALANCE

The LM300 is light-weight (only 35.9 lbs with battery) and perfect for mowing around flower beds.

SPECIFICATIONS

- Brushless motor
- 16" (40 cm) cutting width
- 13.2 gal (1.4 bushel) debris bag
- 35.9 lbs with battery
- 6 Cutting positions

16" (40 cm) cutting width

Easily adjust cutting height

13.2 gal debris bag

NEW LM400 Lawn Mower

40V MAX LITHIUM-ION

6.0 Ah = up to 10,000 ft²
4.0 Ah = up to 7,000 ft²
With two batteries
Works with all Oregon batteries

Vertical Storage Position

Oregon's new LM400 Lawn Mower possesses the power capacity to cut any residential yard. The LM400's tough steel deck gives it the muscular look of a gas mower — without emissions and excess noise. The LM400 can run on only one battery, but it has the capacity for two — which the convenience of extended run time. The LM400 has a vertical storage position, so it will take up minimal space in your garage.

OREGON	Description
591080	Lawn Mower LM400 - Tool only
591079	Lawn Mower Kit LM400 - A6 4.0 Ah battery, standard charger
591078	Lawn Mower Kit LM400 - R7 6.0 Ah battery, rapid charger
591077	Lawn Mower Kit LM400 - X7 Two 4.0 Ah batteries, rapid charger

HIGH PERFORMANCE

Cut more grass with fewer passes. The LM400's brushless motor delivers enhanced torque that allows you to cut high grass and tough vegetation on rough terrain. The LM400's 20" cutting diameter offers a wider cut for larger yards.

SPECIFICATIONS

- Brushless motor
- Steel deck
- 20" (51 cm) cutting width
- 15.9 lbs with one battery
- Vertical storage position
- Dual battery for extended run times
- 6 cutting positions
- Bagging / rear discharge / side discharge

20" (51 cm) cutting width

Dual battery: Operates with 1 or 2 batteries

Side discharge

BL300 Hand-Held Blower

40V MAX LITHIUM-ION

6.0 Ah = up to 120 min.
When running on the lowest trigger setting, 22 min on full trigger, 12 min on turbo button

4.0 Ah = up to 90 min.
When running on lowest trigger setting 15 min. on full trigger 8 min. on turbo button

Large areas of leaves and debris can be easily cleared away with the Oregon® Cordless Blower. The combination of superior air volume, (up to 507 cfm) and speed (up to 131.5 mph) make this the ultimate debris-clearing machine. The cordless blower's low decibel rating, ergonomics, and portablity make it an ideal tool for all-day jobs.

OREGON	Description
572619	Blower BL300 – Tool Only
572621	Blower Kit BL300 - A6 4.0 Ah battery, standard charger
586646	Blower Kit BL300 - R7 6.0 Ah battery, rapid charger

LOW NOISE
The BL300 offers a powerful, low noise solution to clean-up and debris removal. With only 64.6 dB (bystander measure) on Turbo mode, the BL300 allows you to get the job done, without bothering your neighbors.

HIGH-PERFORMANCE
The innovative brushless motor and axial fan offer a powerful combination of performance and efficiency. The variable speed trigger allows the user to stay in complete control by only using the power required by the job. The Cordless Blower delivers up to 507 cfm of air per hour.

ERGONOMICALLY DESIGNED
The Cordless Blower is designed for extended use. The comfortable handle and shoulder strap make it ideal for large areas.

SPECIFICATIONS
- Only 8.9 lbs (with battery).
- Superior air volume (up to 507 cfm of air per hour).
- Exceptional air speed (up to 131.5 mph).
- Variable speed trigger.

Well balanced

Convenient built-in holes (strap included)

Turbo button and variable speed trigger

ST275-GSL Trimmer/Edger

40V MAX LITHIUM-ION

6.0 Ah = approx. 45–60 min.
4.0 Ah = up to 30-40 min.
2.6 Ah = up to 20-30 min.
Depending on material being cut and user technique

Cut through tough vegetation and beautify your landscape; the Trimmer/Edger's patented gear drive technology allow you to do both.

OREGON	Description
582152	Trimmer / Edger ST275 - Tool Only With Gator SpeedLoad trimmer head
590498	Trimmer / Edger Kit ST275 - E6 2.6 Ah battery pack, standard charger
581207	Trimmer / Edger Kit ST275 - A6 4.0 Ah battery pack, standard charger
586726	Trimmer / Edger Kit ST275 - R7 6.0 Ah battery pack, rapid charger

2-IN-1 TRIMMER / EDGER
Switch quickly from timmer to edger.

HIGH TORQUE AND POWER
Patent gear drive technology provides high performance and torque to cut through thick vegetation. The variable throttle allows the user to maintain control.
US patent numbers 6,301,788 and 6,014,812 used under license.

ERGONOMICALLY DESIGNED
- Designed for comfort and extended use.
- Sling included to help reduce operator fatigue.

SPECIFICATIONS
- Only 9.4 lbs (with battery).
- 13" cutting diameter
- 6250 rpm no-load cutting speed.
- Gator® SpeedLoadTM trimmer head

Gator SpeedLoad Head

FAST. Fastest loading system ever. Reduce the whole process from 5 minutes to a few seconds.

EASY. Open the head. Place the disc. Close the head.

DURABLE. Long lasting heat-treated disc, twice as long as standards lines.

PS250 Pole Saw

40V MAX LITHIUM-ION

6.0 Ah = up to 750 cuts
4.0 Ah = up to 500 cuts
2.6 Ah = up to 325 cuts
In 2" - 3" material

The Oregon® Pole Saw gives you precision, power, and a telescoping reach for all trimmming and pruning jobs. The shaft allows up to 14'-15' of access, while the premium battery pack and mid-mount motor provide you with the longevity and comfort for a long day's work.

OREGON	Description
563456	Pole Saw PS250 - Tool Only 40V MAX* pole saw, 8" (20 cm) guide bar, Microlite™ narrow kerf chain
563455	Pole Saw Kit PS250 - E6 2.6 Ah battery, standard charger
563454	Pole Saw Kit PS250 - A6 4.0 Ah battery, standard charger
586642	Pole Saw Kit PS250 - R7 6.0 Ah battery, rapid charger

EXTENDABLE REACH
Extend up to 10'2" (3.1 mm) for a reach of up to 14'-15' (4.5m) from the ground level.**

MID-MOUNT MOTOR
The mid-mount motor places the pole saw's weight (and size) between your hands. This reduces the size of the cutting head — making it easier to reach hard-to-reach-cuts, and reduces the weight at the end of the pole — improving ergonomics and reducing fatique.

ERGONOMICALLY DESIGNED
In addition to the mid-mount motor, the pole saw weighs only 13.5 lbs with the battery, which means better balance and less fatigue. A shoulder strap is included for additional comfort.

SPECIFICATIONS
- Only 13.5 lbs (with battery).
- Chain speed: 2817 fpm.
- 3/8" Microlite narrow kerf 90PX chain.
- 8" (20 cm) bar.

*** Based on estimate for a 5'10" (1.8 m) individual operating at a 60 degree angle + / - 18 degrees.*

Slim, compact head

Mid-mount motor

Adjustable collar

Branch hook

HT250 Hedge Trimmer

40V MAX LITHIUM-ION

6.0 Ah = up to 150 min.
4.0 Ah = up to 100 min.
2.6 Ah = up to 60 min.
Depending on material being cut and user technique.

The Oregon® Hedge Trimmer is light enough for you to tackle tall and wide hedges as well as rows of smaller hedges. The laser-cut blades will cut neat and precise formations while maintaining the health of the plants.

OREGON	Description
551275	Hedge Trimmer HT250 - Tool Only
558812	Hedge Trimmer Kit HT250 - E6 2.6 Ah battery, standard charger
585212	Hedge Trimmer Kit HT250 - A6 4.0 Ah battery, standard charger
567040	Hedge Trimmer Kit HT250 - A7 4.0 Ah Battery, Rapid Charger

26" (60 CM) LASER-CUT BLADES

Laser-cut blades mean cleaner cuts and healthier plants, while the low noise (74 dB) offers a combination of superior performance and operator comfort.

ERGONOMICALLY DESIGNED

Large, comfortable handles. Dual action design for low vibration.

SPECIFICATIONS

- Only 9.8 lbs (with battery).
- 2750 strokes per minute maximum cutting speed.
- Cuts up to a 3/4" branch.
- Variable speed trigger.

Premium Blade Technology

Engineered with premium blade technology to outlast the competition. Rugged and durable, the Oregon HT250 Hedge Trimmer's blades are perfect for trimming and sculpting.

WL275 Portable Light

40V MAX LITHIUM-ION

6.0 Ah = approx. 36 hrs. on LOW
6.0 Ah = approx. 18 hrs. on HIGH
AC Power Cord = Continuous run time

Battery not included. Works with any Oregon Cordless 40V MAX battery pack.

The Oregon® Portable Light keeps work sites illuminated well after the sun sets. Our unique power options give you the flexibility to choose between the included AC power cord or inserting an Oregon PowerNow™ Battery Pack.

OREGON	Description
581611	LED Portable Light WL275 - Tool Only

HIGH-PERFORMANCE
1091 Lumens / 12 hours on HIGH
584 Lumens / 24 hours on LOW

PORTABLE
Use the provided AC power cord or go portable with any Oregon Cordless Tool System Battery Pack.

DURABLE AND CONVENIENT
The durable fame and multiple angle adjustments offer ideal work site performance.

Multiple adjustments for 90˚+ light angle options

** Fully charged battery voltage measured without a workload is 40 volts. Nominal voltage is 36 or 37 depending on battery used.*

Chainsaw Tool Bag

The Tool Bag is designed to protect, carry, and store an Oregon chainsaw or blower with accessories.

- Internal lining and outside pocket is water and oil resistant
- Rugged construction resists abrasion and wear
- Extra-large, wide-mouth opening for easy access and visibility
- 7 internal and 2 external pockets neatly organize your battery, charger, and other accessories
- 27" L x 12" W x 12" H (68.6 cm x 30.5 cm x 30.5 cm)
- Comfortable fitting and light weight

OREGON	Description
551276	Tool Carry Bag

Back Pack

The Backpack is ideal to carry extra batteries, or use it for your computer/tablet:

- Size: 13.5" x 4" x 19"
- Laptop & Tablet pocket inside
- Reflectives on front and strap

OREGON	Description
593441	Backpack

Corded Chainsaws

CS1500
The only self-sharpening corded electric chainsaw on the market

CS1400

Oregon's high-power, 15 amp CS1500 chainsaw is the only corded electric chainsaw on the market with a chain that can sharpen itself. The CS1500 has all the traditional conveniences of an electric saw — instant start with the pull of a trigger, minimal maintenance, low noise and silent between cuts — and takes it one step further by incorporating the built-in PowerSharp® chain sharpening system.

15 amp CS1400 chainsaw offer all the benefit of the CS1500 except that the PowerSharp system is replaced by an Oregon ControlCut high performance chain. + 33% longer semi Chisel cutters, suitable for all-day cutting. Low vibration, kick-back reduction. CS1400 is available with a 16" guide bar

OREGON	Description
603352	Self-Sharpening Electric Chainsaw, Model CS1500 Includes: chainsaw, 18" guide bar, and PowerSharp chain. Fully assembled
603353	Self-Sharpening Electric Chainsaw, Model CS1500 Includes: chainsaw, 18" guide bar, and PowerSharp chain. Shorter box, semi-assembled
603348	Electric Chainsaw, Model CS1400 Includes : chainsaw, 16" guide bar, and ControlCut chain. Short box, semi-assembled

INSTANT START

- No pull cords
- No warm up
- No gas-oil mixing
- No emissions

LOW NOISE

- Much quieter than a gas saw
- Silent between cuts

ERGONOMIC DESIGN

- Light-weight and balanced
- Low vibration
- Over-mold comfort handle

SPECIFICATIONS

- Bar length: CS1500: 18" (45cm); CS1400: 16" (40cm)
- CS1500: PowerSharp chain, 3/8 in. Low Profile® with .050" gauge
- CS1400: ControlCut 91PXL056G chain, 3/8 in. with .050 gauge
- Automatic oiler with view-through window
- 15 amp rating
- 120 Volt ~ 60 Hz
- No load chain speed 2888 FPM
- Weighs 12.9 lbs (5,85 kg)

PowerSharp Sharpening System

With the built-in PowerSharp Sharpening System, there's no more downtime due to dull chain. Simply pull the PowerSharp lever for 3 – 5 seconds and the chain works like new. With PowerSharp, you can sharpen on the saw, on the job, in seconds®.

(see pages 136-137 of the FOR section of the catalog for more detail)

PowerSharp® Saw Chain for CS250, CS300 & CS1500

The Oregon PowerSharp® sharpening system means no more downtime due to dull chain. PowerSharp allows you to sharpen on the saw, on the job, in seconds®.

- Sharpens in 3 – 5 seconds
- No extra tools needed for sharpening
- 10 – 20 sharpenings per chain
- 3/8" Low Profile™ / .050" gauge

OREGON	Description
560507	CS250, CS300 Replacement 14" (35 cm) PowerSharp Saw Chain (includes sharpening stone)
560510	CS300, CS1500 Replacement 16" (40 cm) PowerSharp Saw Chain (includes sharpening stone)
571037	CS1500 Replacement 18" (50 cm) PowerSharp Saw Chain (includes sharpening stone)

Saw Chain for PS250

OREGON	Description
90PX034G	8" (20 cm) Replacement Saw Chain • Micro-Lite™, Narrow Kerf

Saw Chain for PS600

OREGON	Description
25AP058G	10" (25 cm) Replacement Saw Chain • Micro Chisel®

Saw Chain for CS1400

OREGON	Description
91PXL056G	16" (40cm) Replacement Saw Chain. ControlCut chain.

Guide Bar for CS250, CS300 & CS1500

OREGON	Description
140SDEA041	14" (35 cm) Replacement Guide Bar - Model CS250, CS300
160SDEA041	16" (40 cm) Replacement Guide Bar - Model CS300, CS1500
180SDEA041	18" (50 cm) Replacement Guide Bar - Model CS1500

Guide Bar for PS250, PS600

OREGON	Description
084MLEA041	8" (20 cm) Replacement Guide Bar - Model PS250
100SDAA041	10" (25 cm) Replacement Guide Bar - Model PS600

ST275 Gator® SpeedLoad™ Replacement Trimmer Head Kit

4-1/4" Gator SpeedLoad Trimmer Head for ST275
Use with Oregon ST275 Cordless Trimmer/Edger. Complete kit contains adaptor and shield for mounting on ST275 only. Cannot be used on ST250. Use with Oregon small diameter replacement discs.

OREGON	Description
581647	ST275 GSL Replacement Head Kit (For ST275 only, includes grass wrap shroud)

ST600 Gator® SpeedLoad™ Replacement Trimmer Head Kit

4-1/4" Gator SpeedLoad Trimmer Head for ST600
Use with Oregon ST600 String Trimmer attachment. Complete kit contains adaptor and shied for mounting on ST600 only. Cannot be used on ST250 or ST275-GSL. Use with Oregon 0.080" Gator SpeedLoad replacement discs.

OREGON	Description
595897	ST600 Replacement Head Kit (For ST600 only, includes grass wrap shroud)

.080" Replacement Trimmer Line Gator SpeedLoad

OREGON	Description
24-280-03	(3) – 0.080" (2.4 mm), Small Diameter Disks
24-280-10	(10) – 0.080" (2.4 mm), Small Diameter Disks
24-280-25	(25) – 0.080" (2.4 mm), Small Diameter Disks

ST275 Quick Load Replacement Trimmer Head

This quick loading trimmer head was designed specifically for use with the Oregon® ST275 Trimmer/Edger. The head has many exclusive features to improve run time, reduce noise, and improve cutting performance.

- Comes loaded with .080" Oregon Platinum Gatorline™
- Easy line loading without taking apart the head
- Bump knob is designed to reduce accidental bumping, feeding line only when you need it
- Spool holds up to 12 ft. (30.5 cm) of .080" trimmer line

OREGON	Description
564849	ST275 quick loading replacement trimmer head with line Bump feed, easy load, 2 line.

.080" Platinum Gatorline™ Trimmer Line

Platinum Gatorline solves many of the problems of traditional trimmer line. The armored exterior is more resistant to breakage and also shields a highly flexible co-polymer core for outstanding durability.

- Consistent line diameter
- Armored exterior
- Flexible core
- SuperTwist®

OREGON	Description
20-117	1/2 lb. Donut, Approximately 207 ft. (63.1 m)
20-118	1 lb. Donut, Approximately 414 ft. (126.2 m)
20-119	3 lb. Spool, Approximately 1244 ft. (379.2 m)

Point of Purchase Display

MULTI-ATTACHMENT DISPLAY KIT

603717 D

Get your shed or garage organized with the Oregon Multi-Attachment display.

- The kit includes one header, one hook for PH600 Powerhead and 3 hooks for attachments
- 3 adaptors are included to hang the display on wire grid, slatwall, pegboard, or wall
- 23" W x 8" H

OREGON	No.	Component	QTY.
598136	A	Display Frame	1
598138	B	Attachment Hook	1
598137	C	Powerhead Hook	1
603717	D	Multi-Attachment Display Kit - End Users	1

Ⓐ

Ⓑ

Ⓒ

Point of Purchase Display

3-PANEL DISPLAY KIT

The triple panel, 2' x 6' x 11", black, triangular SlatGrid display offers the ultimate solution for displaying Oregon Cordless Tool System. The kit comes with custom hooks for hanging the BL300, HT250, PS250 and ST275, as well as 2 shelves that can be used to showcase the CS300 Chainsaw and the WL275 Portable Light.

OREGON	Description
560842	OCTS 3 Panel Display Kit

Qty	Kit Components
3	OCTS 24"x72" Slatgrid, BL
3	OCTS 22"x7" Sign Holder, BL
3	OCTS Slatgrid 22"x7" Sign
2	OCTS Slatgrid ST Hook, BL
1	OCTS Slatgrid HT Hook, BL
1	OCTS Slatgrid BL Hook, BL
1	OCTS Slatgrid PS Hook, BL
3	OCTS Slatgrid Lit 8.5"x11", BL
1	OCTS 23.5"x13.5" Shelf, BL
1	OCTS 12"x8" Self, BL
9	OCTS Grid Clip, BL
10	4" Peg hook, BL

INDIVIDUAL COMPONENTS

Available for individual order to enhance existing displays.

OREGON	No.	Component	QTY.
560840	A	OCTS Slatgrid 22"x7" Sign	1
560831	B	OCTS 24"x72" Slatgrid, BL	1
560833	C	OCTS 22"x7" Sign Holder, BL	1
560834	D	OCTS Slatgrid Lit 8.5"x11", BL	1
561214	E	OCTS 12"x8" Shelf, BL	1
560838	F	OCTS 12"x24" Basket, BL	1
560839	G	OCTS 23.5"x13.5" Shelf, BL	1
561215	H	OCTS 6" Peg Hook, BL	1
574431	I	OCTS Slatgrid BL Hook, BL	1
560837	J	OCTS Slatgrid ST Hook, BL	1
560832	K	OCTS Slatgrid T Leg, Pair, BL	1
560830	L	OCTS Slatgrid L Leg, Pair, BL	1
566442	M	OCTS Slatgrid PS Hook, BL	1
560836	N	OCTS Slatgrid HT Hook, BL	1
561218	O	OCTS Grid Clip, BL	1
560829	P	OCTS Slatgrid Tri-Base, BL	1
561249	Q	OCTS Slatgrid Pinwheel, BL	1

Point of Purchase Display

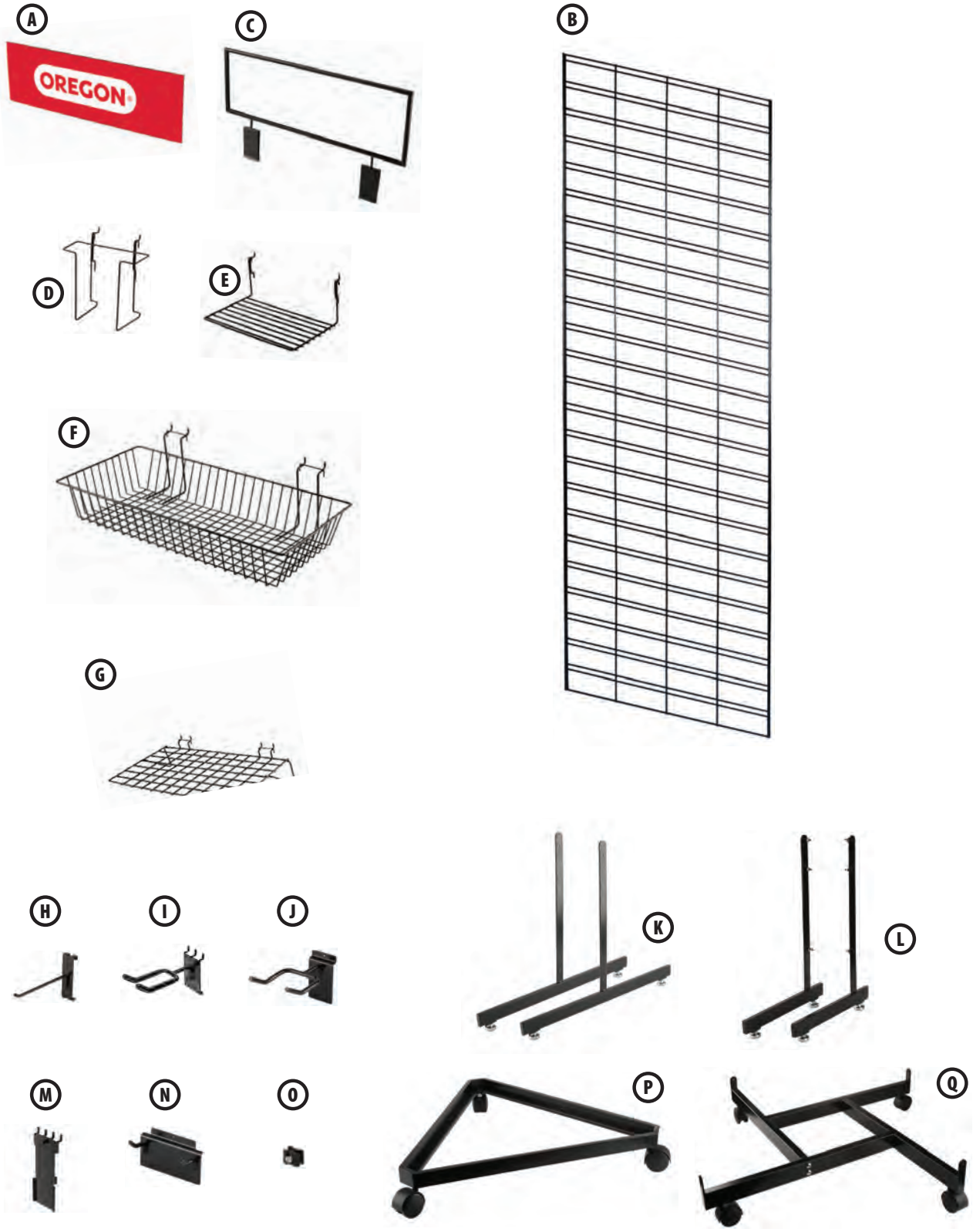

Outdoor Power Equipment

120V Professional Series™

THIS IS REAL POWER

Many cordless products have been labeled professional-grade, but cordless power has never measured up to the performance of traditional, commercial gas equipment—until now. The new Oregon 120V Professional Series is engineered with up to 15% more power than gas-fueled equipment—driving more productivity than ever before.

Introducing Oregon Professional Series—The next evolution of battery technology.

Professional Grade Cordless Equipment
Finally, there's a line of professional-grade tools that offer all the benefits of battery, without sacrificing power, performance, or durability.

Quietly Powerful
Engineered from the ground up with low noise in mind, these tools have been designed so your work can be seen and not heard.

More Power and Torque
Engineered to offer up to 15% more power than gas-fueled equipment.

Weather Ready
With an IP56 rating, water and dust seals on electrical connections and components mean these tools are ready to work, rain or shine.

Increased Productivity
Efficient power offers extended run times with no refueling stops, while ultra-quiet operation allows early start times at noise-sensitive sites.

Commercial-Grade Durability
Tested tough to endure the rigours of professional use.

BL120VX Leaf Blower

Built to get the job done quickly and quietly with an amazing max-bystander-noise-rating of 59dB(A) for noise-restricted sites, the zero-emission BL120VX was engineered with the professional in mind. With a variable speed trigger, fatigue-reducing throttle lock and a blow force rating of 22N, you're ready for real work.

OREGON	Description
BL120VX-NA	Backpack Blower

1400 W | **UL & IP56** | **≤ 45 Min. Continuous at full trigger** | **22 N 200 MPH 526 CFM**

Specifications

Tool Weight *Without Battery*		20.5 lbs.
Run Time *With BX975 Battery at Full Trigger*	Stealth Mode	45 minutes
	High Output	30 minutes
Power Output	Watts	1400 W
	Newtons	22 N
Speed	Stealth Mode	175 MPH
	High Output	200 MPH
Air Volume	High Output	526 CFM
Noise level *ANSI B175.2 bystander rating*	Stealth Mode	57 dB(A)
	High Output	59 dB(A)

Certifications

Ingress Protection	IP56
UL Certification	Yes
Emissions Certification	California Air Resource Board: Professional Grade Zero Emission Equipment

Warranty

Commercial Grade	2-year

ST120VX String Trimmer

Designed to offer the professional uncompromising performance, the ST120VX delivers exceptional torque-to-power and a full 16.5" cutting swath. The backpack battery design eliminates weight on the tool, easing fatigue during long sessions. Whisper-quiet with zero emissions, the full line is weather-ready and tough enough to move with you from site to site.

OREGON	Description
ST120VX-NA	String Trimmer

1200 W
2.24 Nm

UL & IP56

≤ 4 Hours
Continuous at
Full Trigger

16.5"
Cutting

Cutting System

Professional grade Oregon® Lightning Load® bump-feed head with .095 Magnum Gatorline

Specifications

Tool Weight		12.1 lbs.
Cutting Swath		16.5"
Tool Length		73.5"
Run Time *With BX975 Battery at Full Trigger*	Stealth Mode	4.0 hours
	High Output	2.3 hours
Power Output	Watts	1200 W
	Newton Meter (Nm)	2.24 Nm
Speed	Stealth Mode	4400 RPM
	High Output	5500 RPM
Noise level *ANSI B175.2 bystander rating*	Stealth Mode	52 dB(A)
	High Output	62 dB(A)

Certifications

Ingress Protection	IP56
UL Certification	Yes
Emissions Certification	California Air Resource Board: Professional Grade Zero Emission Equipment

Warranty

Commercial Grade	2-year

EG120VX Edger

For clean edge lines the EG120VX edger delivers true commercial performance. Its 8" blade and heavy-duty gear box don't mind mixing it up with tough soil conditions, and it runs whisper-quiet with zero emissions. Designed for use in any weather, operators can get up to 7 hours of run time with the BX975 backpack battery using Stealth Mode™.

OREGON	Description
EG120VX-NA	Edger

1200 W
3.34 Nm

UL & IP56

≤ 7 Hours
Continuous at
Full Trigger

8"
Blade

Specifications

Tool Weight		13.3 lbs.
Metal Blade		8"
Tool Length		74"
Run Time *With BX975 Battery at Full Trigger*	Stealth Mode	7.0 hours
	High Output	5.6 hours
Power Output	Watts	1200 W
	Newton Meter (Nm)	3.34 Nm
Speed	Stealth Mode	2948 RPM
	High Output	3685 RPM
Noise level *ANSI B175.2 bystander rating*	Stealth Mode	55 dB(A)
	High Output	58 dB(A)

Certifications

Ingress Protection	IP56
UL Certification	Yes
Emissions Certification	California Air Resource Board: Blue Sky

Warranty

Commercial Grade	2-year

EHT120VX Hedge Trimmer

The versatile EHT120VX Extended Hedge Trimmer offers quiet, zero-emissions trimming with the balance and power to handle professional jobs. The 20" blade, extended length, and full 130-degree rotating attachment head allow trimming the tops of tall and wide hedges and ground cover.

OREGON	Description
EHT120VX-NA	Hedge Trimmer

1200 W
8.64 Nm

UL & IP56

≤ 5.7 Hours Continuous at Full Trigger

Specifications

Tool Weight		14.4 lbs.
Blade Length		20"
Articulation		130°/multiple positions
Tool Length		86"
Run Time *With BX975 Battery at Full Trigger*	Stealth Mode	5.7 hours
	High Output	4.0 hour
Power Output	Watts	1200 W
	Newton Meter (Nm)	8.64 Nm
Speed	Stealth Mode	2280 strokes/ minute
	High Output	2950 strokes/ minute
Noise level *ANSI B175.2 bystander rating*	Stealth Mode	54 dB(A)
	High Output	60 dB(A)

Certifications

Ingress Protection	IP56
UL Certification	Yes
Emissions Certification	California Air Resource Board: Professional Grade Zero Emission Equipment

Warranty

Commercial Grade	2-year

Battery Backpack

The Oregon Professional Series Softshell Backpack in black or safety yellow is engineered to carry the weight of the battery close to the operator's core, removing battery weight from the tool and improving productivity, maneuverability, and overall ergonomics.

OREGON	Description
BPBXOR01-UV	Backpack Black
BPBXSY01-UV	Backpack Safety Yellow

BPBXOR01-UV BPBXSY01-UV

120V Lithium Ion Batteries

Oregon Professional Series batteries are engineered to offer the run time needed by professional landscapers. The large-capacity backpack design eliminates weight from the equipment, improving maneuverability and productivity. The BX975 battery packs 9.0 amp hours of capacity for 972 watt-hours of power; the BX650 battery packs 6.0 amp hours of capacity for 648 watt-hours of power to get the job done.

BX975 BX650

OREGON	Description
BX975-UV	BX975 Battery
BX650-UV	BX650 Battery

BX975

9 Ah 972 Wh | **5 Hour Charge Time** | **UL & IP56**

BX650

6 Ah 648 Wh | **3 Hour Charge Time** | **UL & IP56**

CD01120VX

Battery-Tool Power Cable

Featuring automotive-grade weatherized connections for use in any weather, the Oregon Professional Series Battery to Stick Power Cable connects to Oregon Professional Series batteries for all the power and run time the job demands.

OREGON	Description
CD01120VX-NA	Battery-to-Stick Tool Power Cable

UL & IP56

C1600

Battery Charger

The C1600 Battery Charger offers efficient smart charging of 120V Professional Series batteries, actively monitoring battery health to ensure long life and optimal charging. The UL listed low power-draw design allows multiple batteries to charge on one 15 Amp circuit.

OREGON	Description
C1600-NA	Battery Charger

Log Splitter

OREGON LOG SPLITTERS - THE CHOICE OF PROS

Our Log Splitter Family

A log splitter for every job

Whether you are a weekend warrior or a production professional we have a log splitter to fit your needs.

Versatile

Easy-to-use, easy to transport, we designed our log splitter to ensure you can get the job done.

Strong

A full range of splitting force from 22-Ton splitter to 35-Ton, designed with ergonomic positions and built to last.

Exclusive Convenience

The new Oregon 28-Ton Log Splitter features EXtend Split™ - an exclusive design feature that gives the operator a larger work area. Extend Split offers an improved and more comfortable cutting experience that can't be found anywhere else.

FEATURES

- Fast cycle times for increased productivity
- Built-in log cradle design makes splitting wood easier by keeping log in place for hands-free operation
- Ergonomically positioned auto return valve for increased operator comfort and efficient splitting
- Boxed tongue with handle, designed for strength and maneuverability
- 8" (20.3 cm) 10" (25.4 cm) tall wedge has larger splitting surface
- Integrated stripper plates remove stuck logs from wedge upon return
- Solid-steel foot plate for increased strength

22-TON

SPECIFICATIONS

- Tonnage: 22-Ton
- Wedge: 7" (17.8 cm) wedge
- Cycle time: 13 seconds
- Operation options: horizontal and vertical
- Log capacity: 26" (66 cm)
- Hydraulic capacity: 6.5 gallons (24.6 L)
- Tank Capacity: 5 gallons (18.9 L)
- Pump performance: 2-stage, 11 GPM pump
- Working height: 31.5" (80 cm)
- Weight: 595 lbs (270 kg)

ENGINE OPTIONS

All EPA approved

Honda GC190

190cc

Kohler SH265

196cc

OREGON	Description
S402022H0	22-Ton Log Splitter (Honda)
S402022K0 (shown)	22-Ton Log Splitter (Kohler)

Features

LOG SPLITTING FORCE

1. Auto-return valve speeds up the log splitting process.
2. Ergonomically positioned valve placement for increased operator comfort.
3. 4" X 24" (10.2 X 61 cm) cylinder capable of producing 22-tons of splitting force, makes this our most popular tonnage for splitting most logs.
4. The efficient 7" (17.8 cm) wedge is also 4-way wedge compatible.

BUILT TO LAST

5. Integrated stripper plates and log cradle for rigidity; capable of removing stuck logs and holding logs secure for hands-free splitting.
6. Solid-steel foot piece designed for increased strength.
7. 2-stage 11 GPM pump for faster production.
8. 6.5 gallons (24.6 L) hydraulic capacity allows plenty of room for fluid to keep flowing and stay cool.

VERSATILE & PORTABLE

9. 4.80" x 8.0" (12.3 cm x 20.30 cm) 45 MPH tires DOT certified.
10. Horizontal shaft engine opposite side of operator.
11. Spring-loaded 6" x 6" (15.2 cm X 15.2 cm) beam lock keeps beam secure.
12. Boxed tongue with rotating ground stand and handle gives solid support during splitting.
13. Optimized trailer tow height.

Log Splitter - Hydraulic

28-TON

STANDARD
WORK-ZONE

SPECIFICATIONS

- Tonnage: 28-Ton
- Wedge: 8" (20.3 cm) wedge
- Cycle time: 14 seconds
- Operation options: horizontal and vertical
- Log capacity: 24.5" (62.23 cm)
- Hydraulic capacity: 8 gallons (30.2 L)
- Tank capacity: 6.5 gallons (24.6 L)
- Pump performance: 2-stage, 16 GPM pump
- Weight: 610 lbs (276 kg)

ENGINE OPTIONS

All EPA approved

Kohler CH395

277cc

OREGON	Description
596879 (shown)	28-Ton Log Splitter (Kohler)

Features

LOG SPLITTING FORCE

1. 4.5" (11.4 cm) cylinder, 28-tons of splitting force.
2. Auto-return valve speeds up the log splitting process.
3. Ergonomically positioned valve placement for increased operator comfort.
4. The 8" (20.3 cm) wedge adds splitting surface and is 4-way wedge compatible

BUILT TO LAST

5. Stripper plates integrated for rigidity; capable of removing stuck logs; and cradling the log in place for hand-free splitting.
6. High-strength U.S. steel beam with interlocking toothplate designed for increased strength and durability
7. 8 gallons (30.2 L) hydraulic capacity.

VERSATILE & PORTABLE

8. 4.80" x 12.0" (12.3 cm x 30.48 cm) 45 MPH tires DOT certified allow for easier maneuverability on the job site.
9. Horizontal shaft engine opposite side of operator.
10. Boxed tongue with rotating jack stand and handle gives solid support during splitting.

28-TON

NEW **EXtend Split™**

EXTENDED WORK-ZONE

Splitting just got easier with our NEW EXtend Split™

SPECIFICATIONS

- Tonnage: 28-Ton
- Wedge: 8" (20.3 cm) wedge
- Cycle time: 14 seconds
- Operation options: horizontal and vertical
- Log capacity: 24.5" (62.23 cm)
- Hydraulic capacity: 8 gallons (30.2 L)
- Tank capacity: 6.5 gallons (24.6 L)
- Pump performance: 2-stage, 16 GPM pump
- Weight: 650 lbs (295 kg)

ENGINE OPTIONS

All EPA approved

Honda GX270

270cc

Kohler CH395

277cc

OREGON	Description
596280	28-Ton Log Splitter (Honda)
596279 (shown)	28-Ton Log Splitter (Kohler)

EXTENDSPLIT™ WORK ZONE

- More space to work
- Improved access
- Exclusive to Oregon

Features

LOG SPLITTING FORCE

1. 4.5" (11.4 cm) cylinder, 28-tons of splitting force.
2. Auto-return valve speeds up the log splitting process.
3. Ergonomically positioned valve placement for increased operator comfort.
4. The 8" (20.3 cm) wedge adds splitting surface and is 4-way wedge compatible

BUILT TO LAST

5. Stripper plates integrated for rigidity; capable of removing stuck logs; and cradling the log in place for hand-free splitting.
6. High-strength U.S. steel beam with interlocking toothplate designed for increased strength and durability.
7. 8 gallons (30.2 L) hydraulic capacity.

VERSATILE & PORTABLE

8. 4.80" x 8.0" (12.3 cm x 20.30 cm) 45 MPH tires DOT certified.
9. Horizontal shaft engine opposite side of operator.
10. Boxed tongue with rotating utility jack and handle designed for strength during splitting.

Log Splitter - Hydraulic

35-TON

SPECIFICATIONS

- Tonnage: 35-Ton
- Wedge: 10" (25.4 cm) wedge
- Cycle time: 14 seconds
- Operation options: horizontal and vertical
- Log capacity: 24.5" (62.23 cm)
- Hydraulic capacity: 8 gallons (30.2 L)
- Tank capacity: 6.5 gallons (24.6 L)
- Pump performance: 2-stage, 16 GPM pump)
- Weight: 730 lbs (331 kg)

ENGINE OPTIONS

All EPA approved

Honda GX270

270cc

Kohler CH395

277cc

OREGON	Description
596282 (shown)	35-Ton Log Splitter (Honda)
596281	35-Ton Log Splitter (Kohler)

Features

LOG SPLITTING FORCE

1. Auto-return valve speeds up the log splitting process.
2. Ergonomically positioned valve placement for increased operator comfort.
3. 5"x 24" (10.2 X 61 cm) cylinder capable of producing 35 tons of splitting force, makes this our most popular tonnage for splitting most logs.
4. Large 10" (25.4 cm) wedge has larger splitting surface for splitting larger logs in a single pass and is 4-way wedge compatible.

BUILT TO LAST

5. Integrated stripper plates and log cradle for rigidity; capable of removing stuck logs and holding logs secure for hands-free splitting.
6. High-strength U.S. steel beam with reinforced, integrated log cradle and interlocking footplate designed for increased strength and durability.
7. 2-stage 16 GPM pump for faster production.
8. 8 gallons (30.2 L) hydraulic capacity allows plenty of room for fluid to keep flowing and stay cool.

VERSATILE & PORTABLE

9. 4.80" x 12.0" (12.3 cm x 30.48 cm) 45 MPH tires DOT certified. Optimized trailer tow height.
10. Horizontal shaft engine opposite side of operator.
11. Boxed tongue with rotating utility jack and handle designed for strength during splitting.

Log Splitters - Kinetic

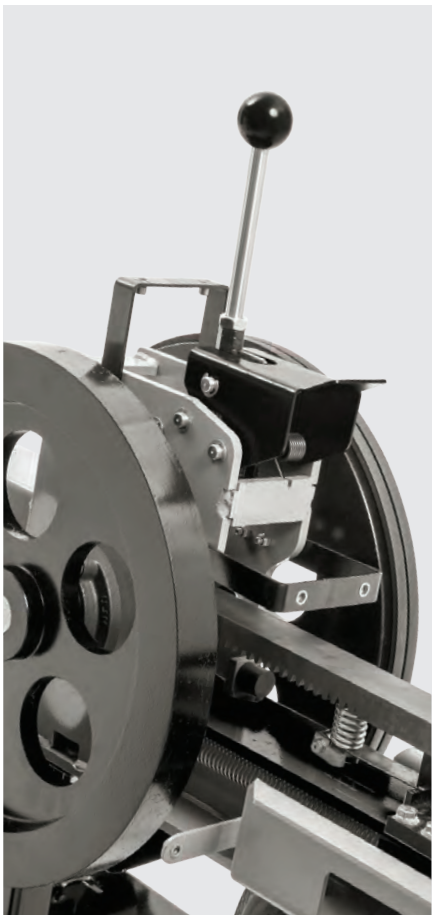

SPLIT WOOD 6X FASTER* WITH KINETIC POWER

Kinetic Advantages

Save Time & Money

Kinetic splitters consume less fuel than hydraulic splitters because the power requirements on the engine are less.

Clean Operation

No hydraulic fluid, cylinders, pumps, hoses, fittings, or filters eliminates hydraulic leaks and maintenance.

Work Efficiently

The precision wedge splits clean, creating less wood-waste debris.

How It Works

Precision balanced, 70-pound flywheels spin at 325 PMs to create and store kinetic energy.

As the flywheels turn, the pinion gear spins on the same shaft. When the control handle moves forward, the rack presses onto the pinion gear.

The rack and push plate power forward at high speed, pushing the log through the wedge. This burst of energy adds high speed to the splitting action versus a much slower 20 to 40 ton hydraulic log splitter. As a result, most logs are split in 2 or 3 seconds instead of more than 13 seconds with a hydraulic splitter.

*Compared with hydraulic log splitters

KINETIC

SPECIFICATIONS

- Kinetic log splitter
- Wedge: 6" (15.24 cm) wedge
- Cycle time: 2 seconds
- Operation options: horizontal
- Log capacity: 24" (61 cm)
- Weight: 640 lbs (290.3 kg)

ENGINE OPTIONS

All EPA approved

Kohler SH265

196cc

OREGON	Description
581738 (shown)	Kinetic Log Splitter (Kohler)

Features

WORK SMARTER WITH LESS FATIGUE

1. Virtually eliminates kick-back with patent-pending handle design with torsion springs that absorb energy when a stall occurs.
2. Reduced operator fatigue due to no unnecessary motion.
3. Work from either side of the log splitter with the convenient two-handed operation.

HEAVY-DUTY WORK TABLE

4. Minimize snags when you bring a log back for re-splitting. The work surface is smooth and flush with the beam.
5. Split more logs with less debris. The log splitter's wide slots reduce build-up that could jam the push plate assembly.
6. The 32" wide work table allows easy access to rounds and re-splits from either side.

VERSATILE & PORTABLE

7. Easily move the log splitter around your work site with the welded, table-mounted handles.
8. Tow it on the highway with the 2" ball coupler and safety chains, 45 MPH DOT certified tires.
9. Load and unload easily with the stow-away retractable tongue.

BUILT FOR YEARS OF COMMERCIAL USE

10. Work efficiently. The precision wedge splits clean, creating less wood-waste debris in high-volume applications and can be sharpened to maintain edge in the future.
11. The heavy-duty stand centered under the table supports years of commercial use.
12. The precision, heat-treated, steel alloy rack and pinion gear system is proudly made in the USA.
13. The durable, high-strength steel drive system components are manufactured for heavy commercial use.

Log Splitters - Accessories

Log Splitter Catcher

Log catchers keep work at a consistent height, reducing strain and fatigue on the operator and to help keep the immediate work-space in order. Built of heavy-gauge steel, these attachments are designed to be durable and easily installed.

OREGON	Description
S40200600	Log Catcher Fits:
	22-Ton Use with Oregon S402022HO/HOEX or S402022KO/KOEX 22-Ton Log Splitters (serial numbers starting with A through H, ending in 6 or lower, or any unit with serial ending in: 3, 4, 5.)
	28-Ton Use with Oregon S402028HO/HOEX or S402028KO/KOEX 28-Ton Log Splitters (serial numbers 1G1110552 and smaller)

OREGON	Description
564068	Log Catcher Fits:
	22-Ton Use with Oregon S402022 Log Splitter (serial numbers starting with J, K, or L and ending in 6 or higher)
	28-Ton Use with Oregon S402028 Log Splitter (serial number 1G1110553 and larger)

OREGON	Description
581194	Log Catcher Fits:
	28-Ton Use with Oregon 596879 Log Splitter
	28-Ton **ExtendSplit™** Use with Oregon 596280 (Honda) or Oregon 596279 (Kohler) Log Splitters
	35-Ton Use with Oregon 596282 (Honda) or Oregon 596281 (Kohler) Log Splitters

4-Way wedge

Log catchers keep work at a consistent height, reducing strain and fatigue on the operator and to help keep the immediate work-space in order. Built of heavy-gauge steel, these attachments are designed to be durable and easily installed.

OREGON	Description
S40201200	4-Way Wedge Fits:
	22-Ton Use with Oregon S402022HO/HOEX or Oregon S402022KO/KOEX Log Splitters (serial numbers starting with A through H, ending in 6 or lower, or any unit with serial ending in: 3, 4, or 5)
	28-Ton Use with Oregon S402028HO/HOEX or Oregon S402028KO/KOEX Log Splitters (serial numbers 1G1110552 and smaller)
564066	4-Way Wedge Fits:
	28-Ton Use with Oregon S402028HO/HOEX or Oregon S402028KO/KOEX Log Splitters (serial numbers 1G1110553 and larger)

OREGON	Description
605808	4-Way Wedge Fits:
	28-Ton Use with Oregon 596879 or 596280 (Honda) or 596279 (Kohler) Log Splitters
	28-Ton **ExtendSplit™** Use with Oregon 596879 or 596280 (Honda) or 596279 (Kohler) Log Splitters
	35-Ton Use with Oregon 596282 (Honda) or 596281 (Kohler) Log Splitters

OREGON	Description
592631	4-Way Wedge Fits:
	22-Ton Use with Oregon S402022 Log Splitter (serial numbers starting with J, K, or L and ending in 6 or higher)

Log Splitters - Accessories

OREGON®

Forestry Parts

FOR

Sections FOR

Important Information on ANSI, Safety, and Selecting Forestry Products
ANSI Standard & Oregon® Saw Chain Classification Chart 2–4

1 Guide Bar and Saw Chain Application Chart
Quick Look Guide 8–19
Product Families Introduction 20
Guide Bar and Saw Chain Application Chart 21–97
Ordering Oregon Saw Chain, Overview of Packaging Changes, Guide Bar and Saw Chain Combos . . . 98–101

2 Saw Chain
PowerCut™ 70-Series EXL 104–105
SpeedCut™ System 106–107
Features, Terminology, and Product Families 108–113
Saw Chain for High-Performace Chainsaws: PowerCut™, SpeedCut™, VersaCut™, ControlCut™, DuraCut™, and RipCut™ 114–131
Saw Chain for Carving: Sculptor™ 132
Saw Chain for Reliable Performance: AdvanceCut™ 134–135
Speciality Saw Chain: PowerSharp® 136–137
Cross-Reference Chart, Sharpening, Grinding, and Replacement Parts 138–143
Saw Chain Troubleshooting 144–146
Saw Chain Drive Link Counts & Length in Feet 147

3 Guide Bars
Professional and Occasional User Guide Bar Product Families 150–151
How to Select, and Numbering System Overview 152–153
Professional Light-Weight Guide Bars: SpeedCut, VersaCut, and ControlCut 154–157
Professional Guide Bars: PowerCut and DuraCut 158–161
Occasional User Guide Bars: AdvanceCut and Single Rivet 162–165
Carving Guide Bars: Sculptor 166
Nose Kits and Accessories 167
Discontinued Guide Bars: ProLite® 168–170
Chainsaw Mounts 171–177
Guide Bar Troubleshooting 178–179

4 Sprockets
Spur & Rim Sprockets 182–186
Application by Chainsaw Model Chart 187–203
Application by Oregon Part Number Chart 204–208
Sprockets Troubleshooting 209–210

5 Chainsaw Parts
Replacement Parts for Chainsaws 214–228

ANSI Information

Customer Safety Information: Important

To dealers: For customer safety, this is a must read.
This insert covers provisions of the safety standard, "ANSI (American National Standards Institute) B175.1". It describes requirements that are designed to reduce the risk of injury due to kickback from s sold in the United States. Kickback is a rapid upward and backward motion of the chainsaw. It happens when the moving saw chain, near the upper part of the tip of the guide bar, contacts an object—for example, a log or a branch. The ANSI standard contains test methods. And these methods check the kickback potential for chainsaws and replacement saw chain.

To help you keep your customers safe, we have included an Oregon Saw Chain Classification Chart. It helps you choose the right replacement saw chains. And, it helps maintain compliance with the ANSI standard.

Chainsaws and the ANSI standard
The ANSI standard divides all gasoline powered chainsaws into two groups:

- Below 3.8 cubic inch displacement (62 cc)
- 3.8 cubic inch displacement (62 cc) and above

According to the ANSI standard, chainsaws below 3.8 cubic inch displacement (62 cc), have to meet low kickback performance requirements (paragraph 5.11.2.1). The manufacturer is required to mark these chainsaws. These chainsaws are required to be durably marked in a lasting manner to identify at least one replacement bar-and-chain combination that has been evaluated with that chainsaw power head and that will provide low kickback performance.

Chainsaws that have 3.8 cubic inch displacement (62 cc) and above, can follow ANSI low kickback provisions. But they are not required to do so. Chainsaws that don't meet the low kickback performance requirements need identification. Specifically, a warning, such as the following:

WARNING: This chainsaw is capable of severe kickback that could result in serious injury to the user. Do not operate this chainsaw unless you have extraordinary cutting needs and experience and specialized training for dealing with kickback. Chainsaws with significantly reduced kickback potential are available.

Replacement saw chain and the ANSI standard
When you replace the saw chain on chainsaws below 3.8 cubic inch displacement (62 cc), you have to use a low kickback chain of the proper pitch, gauge, and drive link count. That keeps the chainsaw in compliance with the low kickback provisions of the ANSI standard. Oregon provides replacement saw chain and we label it according to the ANSI standard. See the green highlighted chain types in the saw chain classification chart included. These are low kickback. The yellow highlighted chain types are not low kickback. These should be used only by people with experience and specialized training for dealing with kickback.

Green label chain is low kickback chain

The green label reads:

ATTENTION: READ THIS
WARNING: This saw chain met the kickback performance requirements of ANSI B175.1-2012 when tested according to the provisions of ANSI B175.1-2012. Low kickback saw chain meets the kickback performance requirements of CSA Standard Z62.3.

Yellow label chain does not comply with the low kickback requirements of the standard

The yellow label reads:

ATTENTION: READ THIS
WARNING: The saw chain in this package may be capable of kickback that could result in serious injury to the chainsaw operator or bystanders. Do not use this saw chain unless you have experience and specialized training for dealing with kickback. Saw chain with reduced kickback potential is available.

Replacement guide bars and the ANSI standard
The ANSI standard states:
Because of differences in replacement guide bars, the following guidelines shall be considered to determine kickback energy:

A. Sprocket nose guide bars with the same effective length, the same number of sprocket nose teeth, the same nose radius, and the same pitch may be considered to have the equivalent kickback energy.
B. A hard-nose guide bar having the same effective bar length, and the same or smaller nose radius as a sprocket-nose bar, may be considered to have equivalent or less kickback energy than the sprocket nose bar.
C. Kickback energy of all guide bars may be considered to be less for smaller nose radius sizes.

When replacing guide bars, in order to maintain approximately the same kickback energy of a chainsaw, the nose size (radius), or number of teeth in a sprocket nose bar, of the replacement bar should be equal to or smaller than the original equipment nose – with the same bar length.

Oregon® Saw Chain Classification Chart

Low kickback saw chain

Part numbers of Oregon saw chain that follow the ANSI low kickback standard (paragraph 5.11.2.4) are listed below. Packages of Oregon low kickback saw chain carry this authorized UL Classification Marking:

LOW KICKBACK SAW CHAIN IN ACCORDANCE WITH ANSI/OPEI B175.1-2012, PARAGRAPH 5.11.2.4 AND WITH CSA Z62.3
This saw chain met the kickback performance requirements of ANSI B175.1-2012 when tested according to the provisions of ANSI B175.1-2012. Low kickback saw chain meets the kickback performance requirements of CSA Standard Z62.3.

Saw Chain Pitch	Part Numbers by Gauge .043"	.050"	.058"	.063"
3/8 low profile™	90PX, 90SG	91P, 91PS, 91PX, 91PXL		
.325		20BPX, M20BPX*	21BPX, M21BPX*	22BPX, M22BPX*
		95VPX		
3/8		72V	73V	75V

The above Saw Chain Classification Chart supersedes and replaces all previous Oregon Saw Chain Classification charts and posters.

Professional use saw chain

Part numbers of Oregon chains that do not meet ANSI low kickback performance requirements are listed below. The chains below should be used only by those with experience and specialized training for dealing with kickback.

Saw Chain Pitch	Part Numbers by Gauge .050"	.058"	.063"
1/4	25AP, 25A, 25F		
3/8 low profile™	91VXL, M91VXL*		
.325	20LPX, M20LPX*, 95TXL	21LPX, M21LPX*	22LPX, M22LPX*
3/8	72APX, 72DPX, M72DPX*, 72LGX, 72JGX, 72EXL, 72EXJ, 72JPX, 72LPX, M72LPX*	73DPX, M73DPX*, 73JGX, 73LGX, 73EXL, 73EXJ, 73LPX, M73LPX*	75DPX, M75DPX*, 75JGX, 75LGX, 75EXL, 75EXJ, 75LPX, M75LPX*
	72RD	73RD	75RD
	72CJ, 72CK, 72CL, 72ECL, 72ECJ, 72ECK		75CJ, 75CK, 75CL, 75ECL, 75ECJ, 75ECK
.404		58L	27X, 27AX, 59J, 59L, 68LX, 68JX
			27R, 27RA
			68CL, 68CJ

* DuraCut™ chain – see Saw Chain section for details

Dealer Responsibilities

Dealers, use extra caution if your customer wants:
Cutting chain that does not meet the low kickback provisions of the ANSI standard, or any replacement guide bar with a nose radius larger than the original-equipment nose.

Oregon urges you — and all of our dealers — to advise these customers that this choice brings added risk of injury. Note also, that customers can buy the chains and bars that meet ANSI low kickback performance requirements. In accordance with ANSI, dealers should advise customers not to use yellow label chain if they do not have experience or specialized training for dealing with kickback.

Oregon chain package labeling
Boxes of Oregon chain are identified on the outside. We identify them using a green or a yellow label. Oregon preprints loop boxes and sheets of labels with the required ANSI kickback information. These preprinted loop boxes and labels are packed inside reel boxes of Oregon chain. Dealers must pack loops of chain into the loop box that has the corresponding green or yellow ANSI information. If you are not using a preprinted loop box, then apply the corresponding green or yellow label to either: the chain, the saw's guide bar or the invoice at the time of sale. Extra boxes and labels are available through your Oregon distributor.

Dealer expertise
You can help your customers stay safe and get the job done right. As you learn more, you'll know exactly which products are right for the job. Getting familiar with the chainsaw fit-up information in this catalog is a good first step.

The fit-up and application information in this catalog are based on data pulled from a variety of sources.
This guide can help you choose products that are right for your customer. But a note of caution — it is possible that some of the information provided contains errors. That's because it's not possible to account for variations in cutting conditions. Or, for how people might use these products from region to region. Dealers should confirm all data and information provided herein. Oregon disclaims all responsibility for any errors contained in this catalog. All dealers are urged to become as knowledgeable as possible about:

- Local conditions and customer needs
- Kickback, and how you can help limit your customers' exposure to injury
- Issues specific to Oregon products, including our end-use symbols, Intenz® guide bars and Guard Mate® bar-nose tip guards, as seen in these pages

Important Information

Choosing Oregon® Products – Important Information

Guard Mate® Bar-nose tip guards

Some chainsaws include a bar-nose tip guard as original equipment (including Echo, Homelite and Ryobi models). Be aware that while some Oregon replacement bars and bar noses have holes for mounting a Guard Mate tip guard, most bars and bar noses do not.

WARNING: Some chainsaws come with bar-nose tip guards. Removing the bar-nose tip guard increases the risk of kickback. The operator, or bystanders, could be seriously hurt. If you replace the bar or the bar nose, make the right choice. Choose bars and bar noses with holes to mount a bar-nose tip guard. And follow the manufacturer's instructions.

Selection and Installation of Oregon Intenz® Guide Bars

Intenz guide bars have our patented Intenz chain tensioning mechanism built right into the bar itself. You can read and follow the information about Intenz guide bars in this section.

Replacing the bar on saws equipped with an Intenz guide bar

Chainsaws originally equipped with an Intenz guide bar do not have a "bar adjustment mechanism" for tensioning the chain. Chainsaws which have been adapted to take an Intenz guide bar have had the bar adjustment mechanism removed. Since these saws have no bar adjustment pin, always replace an Intenz guide bar with another Intenz guide bar. That way, you maintain the saw's ability to properly tension the saw chain.

Replacing a standard bar with an Intenz guide bar

An Intenz bar can be fitted to any chainsaw with a compatible motor mount pattern. If the saw has a bar adjustment mechanism, the mechanism must be removed.

WARNING: Do not use standard-type non-Intenz guide bars on chainsaws without a bar-adjustment mechanism. Be sure to tension the chain correctly. A loose chain can jump off the bar and seriously injure the operator and bystanders. You cannot maintain chain tension on a non Intenz guide bar without the mechanical stop from the saw's bar-adjustment mechanism.

Oregon Maintenance and Safety Manual

More information on the safe and effective use of Oregon saw chain, guide bars and sprockets is available in our Oregon Maintenance and Safety Manual. Oregon urges you, and all of our dealers to read and follow the instructions in this manual. We recommend that our dealers urge their customers to do the same.

Oregon Maintenance and Safety Manuals are printed in English, French, and Spanish and available from your authorized Oregon distributor, or by contacting Oregon directly.

Manual Part Numbers:

- **MMANUEL-EN** (English)
- **MMANUEL-SP** (Spanish)
- **MMANUEL-FR** (French)

Oregon | Blount, Inc.
4909 SE International Way
Portland, OR 97269

800-223-5168 | 503-653-8881
technicalservices@OregonProducts.com
www.OregonProducts.com

GUIDE BAR & SAW CHAIN APPLICATION CHART

Quick Look Guide . . . . . FOR 8–18

Product Families Introduction . . . . . FOR 20

Guide Bar and Saw Chain Application Guide . . . . . FOR 21–97

Ordering Oregon Saw Chain . . . . . FOR 98

Packaging Upgrades Overview . . . . . FOR 99

Bar and Chain Combos . . . . . FOR 100–101

Quick Look Application Guide for Popular Models

Dolmar

340, 401, ES-161, ES-171, ES-173, PS-32, PS-34, PS-35, PS-45, PS-350, PS-351, PS-420, PS-421, PS-3410th

Saw Chain		Guide Bars		
OEM Part No.	Oregon® Part No.	OEM Part No.	Oregon Part No.	Description
3/8' Low Profile™		.050"		
–	91PX045 / 91PXL045 / 91VXL045	–	120SDEA041	Single Rivet 12"
511 492 052	91PX052 / 91PXL052 / 91VXL052	412 035 661	140SDEA041	Single Rivet 14"
511 492 056	91PX056 / 91PXL056 / 91VXL056	412 040 661	160SDEA041	Single Rivet 16"
3/8' Low Profile		.050"		
–	91PX045 / 91PXL045 / 91VXL045	–	*120SPEA041*	Pro-Lite® 12"
511 492 052	91PX052 / 91PXL052 / 91VXL052	–	*140SPEA041*	Pro-Lite 14"
511 492 056	91PX056 / 91PXL056 / 91VXL056	–	*160SPEA041*	Pro-Lite 16"

PS-460, PS-510, PS-540, PS-5100s, PS-5105, PS-5105 H, PS-6000i, PS-6100

.325"		.058"		
523 086 064	21BPX064 / 21LPX064	415 038 631	158PXLBK095	ControlCut™ 15"
523 086 066	21BPX066 / 21LPX066	415 040 631	168PXLBK095	ControlCut 16"
523 086 072	21BPX072 / 21LPX072	415 045 631	188PXLBK095	ControlCut 18"

120, 120 Super, PS-460, PS-510, PS-540, PS-5100s, PS-5105, PS-5105 H, PS-6000i, PS-6100, PS-6800i

3/8"		.050"		
513 496 060	72EXL060 / *72LGX060* / 72LPX060	411 908 660	160VXLHK095	VersaCut™ 16"
513 496 064	72EXL064 / *72LGX064* / 72LPX064	411 909 660	180VXLHK095	VersaCut 18"
513 496 072	72EXL072 / *72LGX072* / 72LPX072	411 910 660	200VXLHK095	VersaCut 20"
3/8"		.050"		
523 100 060	72EXL060 / *72LGX060* / 72LPX060	431 040 014	160RNDK095	PowerCut™ 16"
523 100 068	72EXL068 / *72LGX068* / 72LPX068	431 045 014	180RNDK095	PowerCut 18"
523 100 072	72EXL072 / *72LGX072* / 72LPX072	431 050 014	200RNDK095	PowerCut 20"
523 100 084	72EXL084 / *72LGX084* / 72LPX084	431 060 014	240RNDK095	PowerCut 24"

PS-6400, PS-6400H, PS-6400W, PS-7300, PS-7300H, PS-7300W, PS-7310, PS-7310H, PS-7310W, PS-7900, PS-7910, PS-9010

3/8"		.050"		
523 100 060	72EXL060 / *72LGX060* / 72LPX060	431 040 013	160RNDD009	PowerCut 16"
523 100 068	72EXL068 / *72LGX068* / 72LPX068	431 045 013	180RNDD009	PowerCut 18"
523 100 072	72EXL072 / *72LGX072* / 72LPX072	431 050 013	200RNDD009	PowerCut 20"
523 100 084	72EXL084 / *72LGX084* / 72LPX084	431 060 013	240RNDD009	PowerCut 24"
523 100 092	72EXL092 / *72LGX092* / 72LPX092	431 070 013	280RNDD009	PowerCut 28"
523 100 105	72EXL010 / *72LGX010*5 / 72LPX105	431 080 013	320RNDD009	PowerCut 32"

Part numbers printed in *red italics* have been obsoleted. Contact your authorized Oregon distributor for availability.

Echo

CS-271T, CS-301, CS-305, CS-306

3/8' Low Profile™

.043"

Saw Chain OEM Part No.	Saw Chain Oregon® Part No.	Guide Bars OEM Part No.	Guide Bars Oregon Part No.	Guide Bars Description
90PX45CQ	90PX045	12A4CD3745	124MLEA041	Single Rivet 12"
90PX52CQ	90PX052	14A4CD3752	144MLEA041	Single Rivet 14"

CS-271T, CS-301, CS-303T, CS-310, CS-330T, CS-341, CS-346, CS-352, CS-355T, CS-360T, CS-370, CS-370F, CS-400, CS-400F

3/8' Low Profile

.050"

Saw Chain OEM Part No.	Saw Chain Oregon® Part No.	Guide Bars OEM Part No.	Guide Bars Oregon Part No.	Guide Bars Description
91PX45CQ	91PX045 / 91PXL045 / 91VXL045	12A0CD3745	120DGEA041	Single Rivet 12"
91PX52CQ	91PX052 / 91PXL052 / 91VXL052	14A0CD3752	140DGEA041	Single Rivet 14"
91PX57CQ	91PX057 / 91PXL057 / 91VXL057	16A0CD3757	160DGEA041	Single Rivet 16"
91PX62CQ	91PX062 / 91PXL062 / 91VXL062	18A0CD3762	180DGEA041	Single Rivet 18"

CS-450, CS-520

.325"

.050"

Saw Chain OEM Part No.	Saw Chain Oregon® Part No.	Guide Bars OEM Part No.	Guide Bars Oregon Part No.	Guide Bars Description
95VP66CQ	*95VPX066* / 95TXL066	16F0MD3366	160TXLGK216	–
95VP72CQ	*95VPX072* / 95TXL072	18F0MD3372	180TXLGK216	–
95VP78CQ	*95VPX078* / 95TXL078	20F0MD3378	200TXLGK216	–

CS-440, CS-450, CS-510, CS-530

.325"

.050"

Saw Chain OEM Part No.	Saw Chain Oregon® Part No.	Guide Bars OEM Part No.	Guide Bars Oregon Part No.	Guide Bars Description
20BPX66CQ	20BPX066	16F0AD3366	160VXLGK216	VersaCut™ 16"
20BPX72CQ	20BPX072	18F0AD3372	180VXLGK216	VersaCut 18"
20BPX78CQ	20BPX078	20F0AD3378	200VXLGK216	VersaCut 20"

CS-450P, CS-500P, CS-550P

.325"

.050"

Saw Chain OEM Part No.	Saw Chain Oregon® Part No.	Guide Bars OEM Part No.	Guide Bars Oregon Part No.	Guide Bars Description
20LPX66CQ	20LPX066	16F0LD3366	160VXLGK216	VersaCut 16"
20LPX72CQ	20LPX072	18F0LD3372	180VXLGK216	VersaCut 18"
20LPX78CQ	20LPX078	20F0LD3378	200VXLGK216	VersaCut 20"

CS-600P, CS-620P, CS-620PW, CS-680

3/8"

.050"

Saw Chain OEM Part No.	Saw Chain Oregon® Part No.	Guide Bars OEM Part No.	Guide Bars Oregon Part No.	Guide Bars Description
72LPX60CQ	72LPX060 / 72EXL060 / *72LGX060*	16D0PS3860	160RNDD176	PowerCut™ 16"
72LPX66CQ	72LPX066 / 72EXL066 / *72LGX066*	18D0PS3866	180RNDD176	PowerCut 18"
72LPX70CQ	72LPX070 / 72EXL070 / *72LGX070*	20D0PS3870	200RNDD176	PowerCut 20"
72LPX81CQ	72LPX081 / 72EXL081 / *72LGX081*	24D0PS3881	240RNDD176	PowerCut 24"

Part numbers printed in *red italics* have been obsoleted. Contact your authorized Oregon distributor for availability.

Quick Look Application Guide for Popular Models

Saw Chain		Guide Bars		
OEM Part No.	Oregon® Part No.	OEM Part No.	Oregon Part No.	Description

Echo

CS-590, CS-590 Timberwolf

3/8"		.050"			
72LPX64CQ	72LPX064 / 72EXL064 / *72LGX064*		18D0AS3864	180VXLHD176	VersaCut™ 18"
72LPX70CQ	72LPX070 / 72EXL070 / *72LGX070*		20D0AS3870	200VXLHD176	VersaCut 20"

CS-8000

3/8"		.050"			
72LPX70CQ	72LPX070 / 72EXL070 / *72LGX070*		20D0PS3870	200RNDD176	PowerCut™ 20"
72LPX81CQ	72LPX081 / 72EXL081 / *72LGX081*		24D0PS3881	240RNDD176	PowerCut 24"

Efco

PT2500, PTX2500, PT2700, PTX2700, Multi Mate Pruner

3/8' Low Profile™		.043"			
63090029R	90PX039		63090031	104MLEA318	Single Rivet 10"

MT3500

3/8' Low Profile		.050"			
91P053X	91PX053 / 91PXL053 / 91VXL053		EUSA50000	140SDEA041	Single Rivet 14"
91P057X	91PX057 / 91PXL057 / 91VXL057		EUSA50001	160SDEA041	Single Rivet 16"

MT3500SS

3/8' Low Profile		.050"			
PS53	PS53		EUSA50000	140SDEA041	Single Rivet 14"
PS57	PS57		EUSA50001	160SDEA041	Single Rivet 16"

132S, MT3600, MT3700, MT3750, MT4000, MT4100SP

3/8' Low Profile		.050"			
91P045X	91PX045 / 91PXL045 / 91VXL045		EUSA50018	120SDEA041	Single Rivet 12"
91P052X	91PX052 / 91PXL052 / 91VXL052		EUSA50000	140SDEA041	Single Rivet 14"
91P057X	91PX057 / 91PXL057 / 91VXL057		EUSA50001	160SDEA041	Single Rivet 16"

MT3750SS, MT4100SS

3/8' Low Profile		.050"			
PS52	PS52		EUSA50000	140SDEA041	Single Rivet 14"
PS57	PS57		EUSA50001	160SDEA041	Single Rivet 16"

Efco

MT4400

Saw Chain		Guide Bars		
OEM Part No.	Oregon® Part No.	OEM Part No.	Oregon Part No.	Description
.325"		.050"		
95VPX066X	*95VPX066* / 95TXL066	EUSA50070	160MLBK095	AdvanceCut™ 16"
95VPX072X	*95VPX072* / 95TXL072	EUSA50071	180MLBK095	AdvanceCut 18"

147, 152, MT 5200

.325"		.050"		
20BPX066X	20BPX066	EUSA50022	160PXLBK095	ControlCut™ 16"
20BPX072X	20BPX072	EUSA50023	180PXLBK095	ControlCut 18"
20BPX078X	20BPX078	EUSA50020	200VXLGK095	VersaCut™ 20"
.325"		.058"		
21BPX066X	21BPX066	EUSA50002	168PXLBK095	ControlCut 16"
21BPX072X	21BPX072	EUSA50003	188PXLBK095	ControlCut 18"
21BPX078X	21BPX078	EUSA50021	208VXLGK095	VersaCut 20"

156, 165

.325"		.058"		
001000710R	21BPX066	50012038	168RNBK095	PowerCut™ 16"
001000711R	21BPX072	50012039	188RNBK095	PowerCut 18"
001000712R	21BPX078	50012040	208RNBK095	PowerCut 20"
3/8"		.050"		
72LPX060X	72LPX060 / 72EXL060 / *72LGX060*	EUSA50004	160RNDK095	PowerCut 16"
72LPX068X	72LPX068 / 72EXL068 / *72LGX068*	EUSA50006	180RNDK095	PowerCut 18"
72LPX072X	72LPX072 / 72EXL072 / *72LGX072*	EUSA50008	200RNDK095	PowerCut 20"
72LPX084X	72LPX084 / 72EXL084 / *72LGX084*	EUSA50012	240RNDK095	PowerCut 24"
3/8"		.058"		
73LPX060X	73LPX060 / 73LGX060	EUSA50005	168RNDK095	PowerCut 16"
73LPX068X	73LPX068 / 73LGX068	EUSA50007	188RNDK095	PowerCut 18"
73LPX072X	73LPX072 / 73LGX072	EUSA50008	208RNDK095	PowerCut 20"
73LPX084X	73LPX084 / 73LGX084	EUSA50013	248RNDK095	PowerCut 24"

Part numbers printed in *red italics* have been obsoleted. Contact your authorized Oregon distributor for availability.

Quick Look Application Guide for Popular Models

Saw Chain		Guide Bars		
OEM Part No.	Oregon® Part No.	OEM Part No.	Oregon Part No.	Description

Efco

MT 6500

3/8"		.050"		
72LPX060X	72LPX060 / 72EXL060 / *72LGX060*	EUSA50103	160RNDD009	PowerCut™ 16"
72LPX068X	72LPX068 / 72EXL068 / *72LGX068*	EUSA50104	180RNDD009	PowerCut 18"
72LPX072X	72LPX072 / 72EXL072 / *72LGX072*	EUSA50010	200RNDD009	PowerCut 20"
72LPX084X	72LPX084 / 72EXL084 / *72LGX084*	EUSA50014	240RNDD009	PowerCut 24"

181, MT7200, MT8200

3/8"		.050"		
72LPX072X	72LPX072 / 72EXL072 / *72LGX072*	EUSA50010	200RNDD009	PowerCut 20"
72LPX084X	72LPX084 / 72EXL084 / *72LGX084*	EUSA50014	240RNDD009	PowerCut 24"
72LPX092X	72LPX092 / 72EXL092 / *72LGX092*	EUSA50016	280RNDD009	PowerCut 28"

181, MT7200, MT8200

3/8"		.058"		
73LPX072X	73LPX072 / 73LGX072	EUSA50011	208RNDD009	PowerCut 20"
73LPX084X	73LPX084 / 73LGX084	EUSA50015	248RNDD009	PowerCut 24"
73LPX093X	73LPX093 / 73LGX093	EUSA50017	288RNDD009	PowerCut 28"

Husqvarna

135, 135E, 140, 140E, 317E, 321E, 334T, 338XPT, T435, T540XP

3/8' Low Profile™		.050"		
501 84 21-45	91PX045 / 91PXL045 / 91VXL045	501 95 92-45	120SDEA095	Single Rivet 12"
501 84 21-52	91PX052 / 91PXL052 / 91VXL052	501 95 92-52	140SDEA095	Single Rivet 14"
501 84 21-56	91PX056 / 91PXL056 / 91VXL056	501 95 92-56	160SDEA095	Single Rivet 16"

135, 135E, 140, 140E, 317E, 321E, 334T, 338XPT, T435, T540XP

3/8' Low Profile		.050"		
501 84 21-45	91PX045 / 91PXL045 / 91VXL045	576 83 07-45	120SXEA095	AdvanceCut™ 12"
501 84 21-52	91PX052 / 91PXL052 / 91VXL052	576 83 07-52	140SXEA095	AdvanceCut 14"
501 84 21-56	91PX056 / 91PXL056 / 91VXL056	576 83 07-56	160SXEA095	AdvanceCut 16"

Husqvarna

339XP, 346XP, 353, 357XP, 359, 435, 435E, 440E, 450, 450E

Saw Chain		Guide Bars		
OEM Part No.	Oregon® Part No.	OEM Part No.	Oregon Part No.	Description
.325"		.050"		
501 84 06-56	*95VPX056* / 95TXL056	508 92 61-56	130MLBK095	AdvanceCut™ 13"
501 84 06-64	*95VPX064* / 95TXL064	508 92 61-64	150MLBK095	AdvanceCut 15"
501 84 06-66	*95VPX066* / 95TXL066	508 92 61-66	160MLBK095	AdvanceCut 16"
501 84 06-72	*95VPX072* / 95TXL072	508 92 61-72	180MLBK095	AdvanceCut 18"
501 84 06-80	*95VPX080* / 95TXL080	508 92 61-80	–	–
.325"		.058"		
501 84 04-56	21BPX056 / 21LPX056	508 92 21-56	138PXBK095	AdvanceCut 13"
501 84 04-64	21BPX064 / 21LPX064	508 91 21-64	158PXBK095	AdvanceCut 15"
501 84 04-66	21BPX066 / 21LPX066	508 92 21-66	168PXBK095	AdvanceCut 16"
501 84 04-72	21BPX072 / 21LPX072	508 92 21-72	188PXBK095	AdvanceCut 18"
–	21BPX078 / 21LPX078	608 00 00-01	*208SLGK095*	Pro-Lite® 20"

55, 455E, 455 Rancher, 545, 550XP, 555

3/8"		.058"		
501 84 14-56	73LPX056 / 73LGX056	508 91 41-56	158VXLHK095	VersaCut™ 15"
501 84 14-60	73LPX060 / 73LGX060	508 91 41-60	168VXLHK095	VersaCut 16"
501 84 14-68	73LPX068 / 73LGX068	508 91 41-68	188VXLHK095	VersaCut 18"
501 84 14-72	73LPX072 / 73LGX072	510 15 35-72	208VXLHK095	VersaCut 20"

365, 372XP, 385XP, 390XP, 395XP, 576XP

3/8"		.058"		
501 84 14-56	73LPX056 / 73LGX056	508 91 31-56	158VXLHD009	VersaCut 15"
501 84 14-60	73LPX060 / 73LGX060	508 91 31-60	168VXLHD009	VersaCut 16"
501 84 14-68	73LPX068 / 73LGX068	508 91 31-68	188VXLHD009	VersaCut 18"
501 84 14-72	73LPX072 / 73LGX072	508 91 31-72	208VXLHD009	VersaCut 20"

365, 372XP, 385XP, 390XP, 395XP, 562XP, 576XP, 3120XP

3/8"		.058"		
501 84 14-60	73LPX060 / 73LGX060	608 00 00-43	168RNDD009	PowerCut™ 16"
501 84 14-68	73LPX068 / 73LGX068	501 95 69-68	188RNDD009	PowerCut 18"
501 84 14-72	73LPX072 / 73LGX072	501 95 69-72	208RNDD009	PowerCut 20"
501 84 14-84	73LPX084 / 73LGX084	501 95 69-84	248RNDD009	PowerCut 24"
501 84 14-92	73LPX092 / 73LGX092	501 95 69-92	288RNDD009	PowerCut 28"

Part numbers printed in *red italics* have been obsoleted. Contact your authorized Oregon distributor for availability.

Quick Look Application Guide for Popular Models

Saw Chain		Guide Bars		
OEM Part No.	Oregon® Part No.	OEM Part No.	Oregon Part No.	Description

Jonsered

CS 2139T

3/8' Low Profile™

.050"

501 84 69-45	91PX045 / 91PXL045 / 91VXL045	544 07 12-45	120SDEA095	Single Rivet 12"
501 84 69-52	91PX052 / 91PXL052 / 91VXL052	544 07 12-52	140SDEA095	Single Rivet 14"
501 84 69-56	91PX056 / 91PXL056 / 91VXL056	580 47 61-56	160SDEA095	Single Rivet 16"

CS2138, CS2140, CS2141, CS2238, CS2238 S, CS2240, CS2240 S

3/8' Low Profile

.050"

501 84 69-45	91PX045 / 91PXL045 / 91VXL045	–	120SDEA041	Single Rivet 12"
501 84 69-52	91PX052 / 91PXL052 / 91VXL052	501 92 69-52	140SDEA041	Single Rivet 14"
501 84 69-56	91PX056 / 91PXL056 / 91VXL056	501 85 53-56	160SDEA041	Single Rivet 16"

.325"

.050"

501 84 06-56	*95VPX056* / 95TXL056	508 92 63-56	130MLBK041	AdvanceCut™ 13"
501 84 06-64	*95VPX064* / 95TXL064	508 92 63-64	150MLBK041	AdvanceCut 15"
501 84 06-66	*95VPX066* / 95TXL066	508 92 63-66	160MLBK041	AdvanceCut 16"
501 84 06-72	*95VPX072* / 95TXL072	508 92 63-72	180MLBK041	AdvanceCut 18"

CS2149, CS2145, CS2150, CS2240, CS2245, CS2250, CS2250 S, CS2252, CS2253

.325"

.050"

501 84 06-56	*95VPX056* / 95TXL056	508 92 63-56	130MLBK095	AdvanceCut 13"
501 84 06-64	*95VPX064* / 95TXL064	508 92 63-64	150MLBK095	AdvanceCut 15"
501 84 06-66	*95VPX066* / 95TXL066	508 92 63-66	160MLBK095	AdvanceCut 16"
501 84 06-72	*95VPX072* / 95TXL072	508 92 63-72	180MLBK095	AdvanceCut 18"
501 84 06-80	*95VPX080* / 95TXL080	508 92 63-80	–	–

.325"

.050"

501 84 06-56	*95VPX056* / 95TXL056	508 92 63-56	*130MPBK095*	Pro-Lite® 13"
501 84 06-64	*95VPX064* / 95TXL064	508 92 63-64	*150MPBK095*	Pro-Lite 15"
501 84 06-66	*95VPX066* / 95TXL066	508 92 63-66	*160MPBK095*	Pro-Lite 16"
501 84 06-72	*95VPX072* / 95TXL072	508 92 63-72	*180MPBK095*	Pro-Lite 18"
501 84 06-78	*95VPX078* / 95TXL078	–	–	20"
501 84 06-80	*95VPX080* / 95TXL080	508 92 63-80	–	20"

Part numbers printed in *red italics* have been obsoleted. Contact your authorized Oregon distributor for availability.

Jonsered

CS2149, CS2149 TURBO, CS2150, CS2152, CS2153, CS2250, CS2250 S, CS2252, CS2253

Saw Chain		Guide Bars		
OEM Part No.	Oregon® Part No.	OEM Part No.	Oregon Part No.	Description
.325"		.058"		
501 84 04-56	21BPX056 / 21LPX056	508 91 23-56	138PXLBK095	ControlCut™ 13"
501 84 04-64	21BPX064 / 21LPX064	508 91 23-64	158PXLBK095	ControlCut 15"
531 30 87-47	21BPX066 / 21LPX066	508 91 23-66	168PXLBK095	ControlCut 16"
501 84 04-72	21BPX072 / 21LPX072	508 91 23-72	188PXLBK095	ControlCut 18"
501 84 29-78	21BPX078 / 21LPX078	–	208VXLGK095	ControlCut 20"

CS2156, CS2159, CS2163, CS2255, CS2258, CS2260

3/8"		.058"		
501 84 14-60	73LPX060 / 73LGX060	508 91 43-60	168VXLHK095	VersaCut™ 16"
501 84 14-68	73LPX068 / 73LGX068	508 91 43-68	188VXLHZ095	VersaCut 18"
501 84 14-72	73LPX072 / 73LGX072	508 91 43-72	208VXLHK095	VersaCut 20"
501 84 14-84	73LPX084 / 73LGX084	–	–	24"

CS2165, CS2166, CC2171, CS2172, CS2172 W, CS2186, CS2188

3/8"		.058"		
501 84 25-60	73LPX060 / 73LGX060	501 91 33-60	168VXLHD009	VersaCut 16"
501 84 25-68	73LPX068 / 73LGX068	501 91 33-68	188VXLHD009	VersaCut 18"
501 84 25-72	73LPX072 / 73LGX072	501 91 33-72	208VXLHD009	VersaCut 20"
–	–	–	248VXLHD009	VersaCut 24"
3/8"		.058"		
501 84 14-60	73LPX060 / 73LGX060	501 95 70-60	168RNDD009	PowerCut™ 16"
501 84 14-68	73LPX068 / 73LGX068	501 95 70-68	188RNDD009	PowerCut 18"
501 84 14-72	73LPX072 / 73LGX072	501 95 70-72	208RNDD009	PowerCut 20"
501 84 14-84	73LPX084 / 73LGX084	501 95 70-84	248RNDD009	PowerCut 24"
501 84 14-92	73LPX092 / 73LGX092	501 95 70-92	288RNDD009	PowerCut 28"

Quick Look Application Guide for Popular Models

Redmax

PSZ2401, PSZ 2450S, PSZ2460S (Pole Pruners)

Saw Chain		Guide Bars		
OEM Part No.	Oregon® Part No.	OEM Part No.	Oregon Part No.	Description
3/8' Low Profile™		.043"		
547 10 26-01	90PX044	574 14 55-01	124MLEA218	Single Rivet 12"

GZ380, GZ400, GZ3500T, GZ3800, GZ4000

Saw Chain		Guide Bars		
3/8' Low Profile		.050"		
547 10 27-01	91PX045 / 91PXL045 / 91VXL045	574 13 52-01	120SDEA041	Single Rivet 12"
574 10 28-01	91PX053 / 91PXL053 / 91VXL053	574 13 53-01	140SDEA041	Single Rivet 14"
574 10 30-01	91PX057 / 91PXL057 / 91VXL057	574 13 61-01	160SDEA041	Single Rivet 16"
574 10 31-01	91PX062 / 91PXL062 / 91VXL062	574 13 63-01	180SDEA041	Single Rivet 18"

GZ380, GZ400, GZ3500T, GZ3800, GZ4000

Saw Chain		Guide Bars		
3/8' Low Profile		.050"		
547 10 27-01	91PX045 / 91PXL045 / 91VXL045	–	*120SPEA041*	Pro-Lite® 12"
574 10 28-01	91PX053 / 91PXL053 / 91VXL053	–	*140SPEA041*	Pro-Lite 14"
574 10 30-01	91PX057 / 91PXL057 / 91VXL057	–	*160SPEA041*	Pro-Lite 16"

GZ4500

Saw Chain		Guide Bars		
.325"		.050"		
574 10 32-01	*95VPX066* / 95TXL066	574 13 65-01	160MLBK095	AdvanceCut™ 16"
574 10 31-01	*95VPX072* / 95TXL072	574 13 63-01	180MLBK095	AdvanceCut 18"

G 5000, G 5000 AVS, G 5300

Saw Chain		Guide Bars		
3/8"		.050"		
574 09 41-01	20BPX066 / 20LPX066	574 28 49-01	160VXLGK095	VersaCut™ 16"
576 12 70-01	20BPX072 / 20LPX072	574 10 70-01	180VXLGK095	VersaCut 18"
576 12 71-01	20BPX078 / 20LPX078	574 13 71-01	200VXLGK095	VersaCut 20"

GZ 7000

Saw Chain		Guide Bars		
3/8"		.050"		
–	72EXL060 / *72LGX060* / 72LPX060	–	160RNDD009	PowerCut™ 16"
–	72EXL068 / *72LGX068* / 72LPX068	–	180RNDD009	PowerCut 18"
574 09 93-01	72EXL072 / *72LGX072* / 72LPX072	574 13 87-01	200RNDD009	PowerCut 20"
574 09 94-01	72EXL084 / *72LGX084* / 72LPX084	574 13 88-01	240RNDD009	PowerCut 24"
574 09 95-01	72EXL093 / *72LGX093* / 72LPX093	574 13 89-01	280RNDD009	PowerCut 28"

Part numbers printed in *red italics* have been obsoleted. Contact your authorized Oregon distributor for availability.

Stihl

Saw Chain		Guide Bars		
OEM Part No.	Oregon® Part No.	OEM Part No.	Oregon Part No.	Description
MS170, MS171, MS180C-B, MS180C-BE, MS181, MS192C-E, MS192T C-E				
3/8' Low Profile™		.043"		
61PMM3 44	90PX044	3005 000 3905	124MLEA074	Single Rivet 12"
61PMM3 50	90PX050	3005 000 3909	144MLEA074	Single Rivet 14"
61PMM3 55	90PX055	3005 008 3913	164MLEA074	Single Rivet 16"
MS192C-E, MS192TC-E, MS200, MS200T, MS201T, MS201C-E, MS230, MS230C-BE, MS250, MS250C-BE				
3/8' Low Profile		.050"		
63PM3 44	91PX044 / 91PXL044 / 91VXL044	3005 000 4805	120SDEA074	Single Rivet 12"
63PM3 50	91PX050 / 91PXL050 / 91VXL050	3005 000 4809	140SDEA074	Single Rivet 14"
63PM3 55	91PX055 / 91PXL055 / 91VXL055	3005 000 4813	160SDEA074	Single Rivet 16"
MS230, MS230C-BE, MS231, MS250, MS250C-BE, MS251, MS251C-BE				
.325"		.050"		
23RM3 62	95TXL062	3005 000 7013	160TXLBA074	SpeedCut™ 16"
23RM3 68	95TXL068	3005 008 7017	180TXLBA074	SpeedCut 18"
.325"		.050"		
23RM3 62	20BPX062 / 20LPX062	3005 000 7013	160PXLBA074	ControlCut™ 16"
23RM3 68	20BPX068 / 20LPX068	3005 008 7017	180PXLBA074	ControlCut 18"
.325"		.063"		
26RM3 62	22BPX062 / 22LPX062	3005 000 4713	163PXLBA074	ControlCut 16"
26RM3 68	22BPX068 / 22LPX068	3005 008 4717	183PXLBA074	ControlCut 18"
Farm Boss, MS260 Pro, MS261, MS270, MS290, MS291, MS310, MS311, Wood Boss				
.325"		.050"		
23RM3 67	20BPX067 / 20LPX067	3003 008 6613	160VXLGD025	VersaCut™ 16"
23RM3 74	20BPX074 / 20LPX074	3003 008 6617	180VXLGD025	VersaCut 18"
23RM3 81	20BPX081 / 20LPX081	3003 008 6621	–	VersaCut 20"
.325"		.063"		
26RM3 67	22BPX067 / 22LPX067	3003 008 6813	163VXLGD025	VersaCut 16"
26RM3 74	22BPX074 / 22LPX074	3003 008 6817	183VXLGD025	VersaCut 18"
26RM3 81	22BPX081 / 22LPX081	3003 008 6821	203VXLGD025	VersaCut 20"

Quick Look Application Guide for Popular Models

Saw Chain		Guide Bars		
OEM Part No.	Oregon® Part No.	OEM Part No.	Oregon Part No.	Description

Stihl

Farm Boss, MS260 Pro, MS290, MS291, MS310, MS311, MS361, MS362, MS390, MS391, MSE220

3/8"

33RS3 60	72EXL060 / *72LGX060* / 72LPX060	3003 008 8913	160VXLHD025	VersaCut™ 16"
33RS3 66	72EXL066 / *72LGX066* / 72LPX066	3003 008 8917	180VXLHD025	VersaCut 18"
33RS3 72	72EXL072 / *72LGX072* / 72LPX072	3003 00808921	200VXLHD025	VersaCut 20"
–	–	–	240VXLHD025	VersaCut 24"

MS440, MS441C-M, MS441C-Q, MS460, MS650, MS660

3/8"

.050"

33RS3 60	72EXL060 / *72LGX060* / 72LPX060	3003 000 8813	160RNDD025	PowerCut™ 16"
33RS3 66	72EXL066 / *72LGX066* / 72LPX066	3003 000 8817	180RNDD025	PowerCut 18"
33RS3 72	72EXL072 / *72LGX072* / 72LPX072	3003 000 8822	200RNDD025	PowerCut 20"
33RS3 84	72EXL084 / *72LGX084* / 72LPX084	3003 000 8830	240RNDD025	PowerCut 24"

3/8"

.063"

36RS3 60	75LGX060 / 75LPX060	3003 000 9413	163RNDD025	PowerCut 16"
36RS3 66	75LGX066 / 75LPX066	3003 000 9417	183RNDD025	PowerCut 18"
36RS3 72	75LGX072 / 75LPX072	3003 000 9421	203RNDD025	PowerCut 20"
36RS3 84	75LGX084 / 75LPX084	3003 000 9831	243RNDD025	PowerCut 24"
36RS3 92	75LGX092 / 75LPX092	3003 000 6038	283RNDD025	PowerCut 28"
36RS3 105	75LGX105 / 75LPX105	3003 000 6046	323RNDD025	PowerCut 32"
36RS3 115	75LGX115 / 75LPX115	3003 000 6053	363RNDD025	PowerCut 36"

PRODUCT FAMILIES

Oregon® understands that the needs of woodcutters – professionals and novices – are as diverse as the terrains and environments in which they work.

We have organized our saw chains into product families with key characteristics that different users will value. These product families will help ensure that you choose the right chain based on your everyday needs — helping to make understanding the differences between our chains effortless.

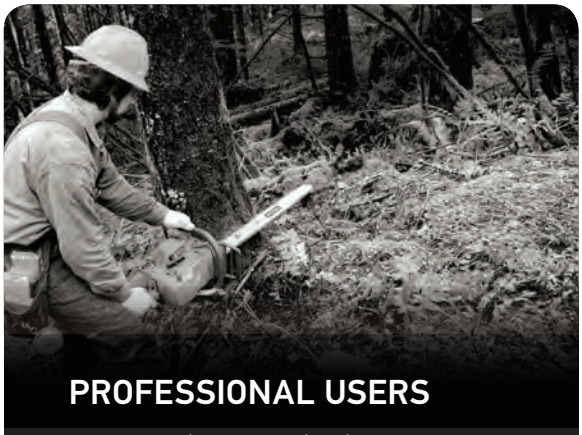

PROFESSIONAL USERS

Loggers, arborists, orchardists, millwrights, forestry workers, and other highly skilled woodcutters require products designed for the demands of their tough professions. Oregon makes products that are strong and durable, with state-of-the-art features that promote a long lifespan and make the products easier to use.

Oregon has developed product families designed for all professional woodcutters. They range from bars and chain that provide more control in the cut to precision cutting systems for the most experienced users. We also make specialty products for the toughest conditions and ripping chain used in saw mills.

PowerCut™
SpeedCut™
VersaCut™
ControlCut™
DuraCut™
RipCut™

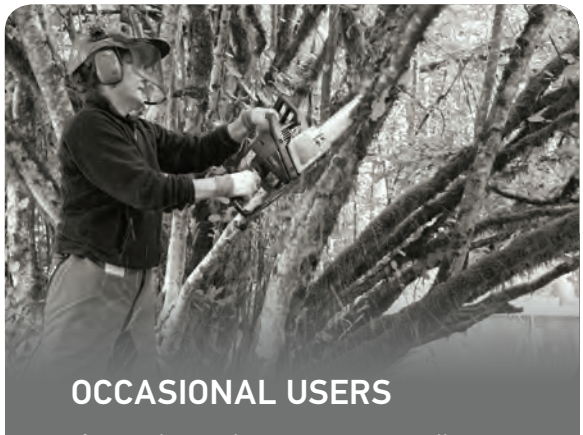

OCCASIONAL USERS

If you only use chainsaws occasionally, Oregon makes several products to meet your needs.

Oregon's occasional user products are perfect for trimming trees, cutting firewood, and maintaining your property.

These bars and chain are easy to use and easy to maintain, featuring technology that reduces kickback.

AdvanceCut™
PowerSharp®
Single Rivet (guide bars only)

Detailed information about each product family can be found on these pages:

Saw Chain → FOR 102–147
Guide Bars → FOR 148–179

Guide Bar & Saw Chain Applications Overview

A

Saw Chain | **Guide Bars**

Pitch	Gauge	Chain Type	Drive Links	Bar Length	Drive Teeth	DuraCut™ AT	PowerCut™ RN RW GN PM	SpeedCut™ TXL	VersaCut™ VXL	ControlCut™ PXL	AdvanceCut™ SF SX PX GD MLB	Single Rivet SD DG MLE
						Armor Tip	PowerMatch®	Pro-Lite® MG MP	Pro-Lite® SLG SLH GL GP SP	Pro-Lite® SLB	Pro-Am®	DoubleGuard®

Husqvarna B

316 Electric, 334T, 335, 335XPT, T435, T540 — D — PowerSharp® Compatible I

Pitch	Gauge	Chain Type		Drive Links	Bar Length	Drive Teeth	F					
	.050	ControlCut 91PXL AdvanceCut 91PX	VersaCut 91VXL	045	12	6				*120SPEA095*	120SXEA095	120SDEA095
				052	14	6				*140SPEA095*	140SXEA095	140SDEA095
				056	16	6				*160SPEA095*	160SXEA095	160SDEA095
E	Intenz® ** G											
3/8 low profile	.050	ControlCut 91PXL AdvanceCut 91PX	VersaCut 91VXL	045	12	6						*120SDET095*
				052	14	6				*140SPET095*		140SDET095
				056	16	6						*160SDET095*
	Narrow Kerf											
	.043	AdvanceCut 90PX		052		6						*144MLEA095*

Husqvarna C

362, 362XP

.325	.050	ControlCut 20BPX	PowerCut 20LPX	066	16	7	*160ATMZ095*	160RNBK095		*160SLGK095* 160VXLGK095	*160PXBK095*	
				072	18	7	*180ATMZ095*				180PXBK095	
				072	18	8				*180SLGK095* 180VXLGK095		
				078	20	7	200ATMZ095	200RNBK095		*200SLGK095* 200VXLGK095	200PXBK095	

A. The bar-and-chain application tables are organized by chainsaw brand names, shown in alphabetical order

B. Saws less than 3.8 cubic inches (62cc) are shown with a green triangle . Low kickback performance requirements in the ANSI standard apply to these saw models

C. Saws 3.8 cubic inches and larger are shown with a yellow triangle . Low kickback performance requirements in the ANSI standard do not apply to these saw models

D. Saw models are listed and further broken down into groups, with each saw model group having its own set of recommended bar-chain applications. Note: Saws made for use with multiple pitches of chain will be listed in more than one saw-model group

E. The bar-chain applications for each group of saw models are organized in sections, with each section headed by one pitch, one gauge and the recommended chain(s) having that pitch and gauge. There are multiple sections of applications for most saw-model groups depending on how many chain gauges, or other product variables apply to each group

F. Spur sprockets and rim systems can vary by tooth count. The common drive sprocket tooth count is shown

G. Where applicable, Intenz or Narrow Kerf saw chain and guide bars applications are grouped and show under the chainsaw model numbers

H. Footnotes at the bottom of the pages provide references to other areas of the catalog where tools, safety, packaged, and speciatly products are found

I. PowerSharp systems are available for some OEM saw models

See our guides for chainsaws with a **green triangle** on pages FOR 2–3

See our guides for chainsaws with a **yellow triangle** on pages FOR 2–3

Saw chain complies with low kickback performance requirements (FOR 2–3)

Saw chain does not comply with low kickback performance requirements (FOR 2–3)

H

For information on our PowerSharp Kits see pages FOR 136–137

For Bar & Chain Combos see pages FOR 100–101

Part numbers printed in *red italics* have been obsoleted. Contact your authorized Oregon distributor for availability.

Guide Bar & Saw Chain Applications

Saw Chain				Guide Bars									
						DuraCut™ AT	PowerCut™ RN RW GN PM	SpeedCut™ TXL	VersaCut™ VXL	ControlCut™ PXL	AdvanceCut™ SF SX PX GD MLB	Single Rivet SD DG MLE
Pitch	Gauge	Chain Type	Drive Links	Bar Length	Drive Teeth	Armor Tip	PowerMatch®	Pro-Lite® MG MP	Pro-Lite® SLG SLH GL GP SP	Pro-Lite® SLB	Pro-Am®	DoubleGuard®
Black+Decker												
Alligator, LP 1000, LLP120												
1/4	.050		ControlCut 25AP	042	6	5						
PP610												
3/8 low profile	.050	ControlCut 91PXL AdvanceCut 91PX	VersaCut 91VXL	040	10	6						100SDEA041
CCS818, LCS120, LPP120, NPP2018												
3/8 low profile	.043	AdvanceCut 90PX		034	8	5						
CS1216												
3/8 low profile	.050	ControlCut 91PXL AdvanceCut 91PX	VersaCut 91VXL	057	16	6						
CS1518												
3/8 low profile	.050	ControlCut 91PXL AdvanceCut 91PX	VersaCut 91VXL	062	18	6						180SDEA041
LCS1020, LCS1020B												
3/8 low profile	.043	AdvanceCut 90PX		040	10	6						
LCS1240												
3/8 low profile	.043	AdvanceCut 90PX		045	12	6						
LH1600, Log Hog												
3/8 low profile	.050	ControlCut 91PXL AdvanceCut 91PX	VersaCut 91VXL	056	16	6						
Chicago Electric												
67255												
3/8 low profile	.050	ControlCut 91PXL AdvanceCut 91PX	VersaCut 91VXL	052	14	6					140SXEA041	140SDEA041
68862 Pole Saw												
3/8 low profile	.050	ControlCut 91PXL AdvanceCut 91PX	VersaCut 91VXL	033	8							080SDEA041

See page FOR 142 for saw chain sharpening tools

* See page FOR 4 for important information on Guard Mate bar-nose tip guards

** See page FOR 4 for important information on Intenz guide bars.

† ANSI B175.1-2012 and CSA Standard Z62.3 regarding reduced kickback does not apply to pole saws or pruners

For the most current fit-up information visit **OregonProducts.com**

Guide Bar & Saw Chain Applications

Saw Chain				Guide Bars									
		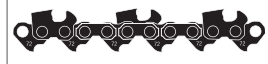				DuraCut™ AT	PowerCut™ RN RW GN PM	SpeedCut™ TXL	VersaCut™ VXL	ControlCut™ PXL	AdvanceCut™ SF SX PX GD MLB	Single Rivet SD DG MLE
Pitch	Gauge	Chain Type	Drive Links	Bar Length	Drive Teeth	Armor Tip	PowerMatch®	Pro-Lite® MG MP	Pro-Lite® SLG SLH GL GP SP	Pro-Lite® SLB	Pro-Am®	DoubleGuard®

Corona Clipper Pole Saw †

TP 4000 Electric Pole Saw

Pitch	Gauge	Chain Type		Drive Links	Bar Length	Drive Teeth	Armor Tip	PowerMatch®	Pro-Lite® MG MP	Pro-Lite® SLG SLH GL GP SP	Pro-Lite® SLB	Pro-Am®	DoubleGuard®
3/8 low profile	.050	**ControlCut** 91PXL **AdvanceCut** 91PX	**VersaCut** 91VXL	040	10	6							

Craftsman ▲

3407, 3411, 3412, 3425, 3445, 3455, 3476, 34094, 34101, 34102, 34104, 34106, 34108, 34109, 34111, 34114, 34115, 34116, 34117, 34118, 34124, 34150, 34180, 34181, 34190, 34195, 35006, 35008, 35018, 35024, 35026, 35027, 35028, 35036, 35037, 35038, 35044, 35046, 35048, 35056, 35058, 35060, 35066, 35067, 35080, 35081, 35082, 35083, 35087, 35088, 35093, 35099, 35104, 35106, 35108, 35114, 35115, 35116, 35117, 35118, 35134, 35136, 35138, 35144, 35145, 35146, 35148, 35156, 35158, 35160, 35161, 35170, 35171, 35180, 35181, 35182, 35190, 35191, 35198, 35202, 35203, 35205, 35206, 35207, 35215, 35216, 35218, 35231, 35235, 35238, 35263, 35266, 35267, 35268, 35269, 35270, 35273, 35280, 35281, 35283, 35363, 35366, 35367, 35504, 35505, 35506, 35508, 35512, 35514, 35515, 35516, 35618, 35623, 35624, 35718, 35723, 35736, 35802, 36010, 36012, 36013, 36015, 36017, 36018, 36026, 36028, 36036, 36038, 36068, 36069, 36080, 36082, 36083, 36085, 36087, 36088, 36218, 38160, 38170

PowerSharp® Compatible

	.050	**ControlCut** 91PXL **AdvanceCut** 91PX	**VersaCut** 91VXL	045	12	6				*120GPEA041* *120SPEA041*		120SXEA041	120SDEA041
				052	14	6						140SXEA041	140SDEA041
				056	16	6				*160GPEA041*		160SXEA041	160SDEA041
				062	18	6							180SDEA041
	Intenz® **												
3/8 low profile	.050	**ControlCut** 91PXL **AdvanceCut** 91PX	**VersaCut** 91VXL	045	12	6				*120SPET041*			
				052	14	6				*140SPET041*			140SDET041
				056	16	6				*160SPET041*			160SDET041
				062	18	6							180SDET041
	.043	**AdvanceCut** 90PX		045	12	6							124MLEA041
				052	14	6							144MLEA041
				056	16	6							*164MLEA041*
316.38070													
3/8 low profile	.050	**ControlCut** 91PXL **AdvanceCut** 91PX	**VersaCut** 91VXL	057	16	6				*160GPEA041*		160SXEA041	160SDEA041
316.34107 – Electric EZ Tool-less chain tensioning													
3/8 low profile	.050	**ControlCut** 91PXL **AdvanceCut** 91PX	**VersaCut** 91VXL	055	16	6							160SDEA318
358.34119													
3/8 low profile	.050	**ControlCut** 91PXL **AdvanceCut** 91PX	**VersaCut** 91VXL	055	16	6							160SDEA318
172.34120													
3/8 low profile	.050	**ControlCut** 91PXL **AdvanceCut** 91PX	**VersaCut** 91VXL	063	18	7							180SDEA041

▲ See our guides for chainsaws with a **green triangle** on pages FOR 2–3

▲ See our guides for chainsaws with a **yellow triangle** on pages FOR 2–3

Saw chain complies with low kickback performance requirements (FOR 2–3)

Saw chain does not comply with low kickback performance requirements (FOR 2–3)

For information on our PowerSharp Kits see pages FOR 136–137

For Bar & Chain Combos see pages FOR 100–101

Part numbers printed in *red italics* have been obsoleted. Contact your authorized Oregon distributor for availability.

Guide Bar & Saw Chain Applications

Saw Chain				Guide Bars									
						DuraCut™ AT	PowerCut™ RN RW GN PM	SpeedCut™ TXL	VersaCut™ VXL	ControlCut™ PXL	AdvanceCut™ SF SX PX GD MLB	Single Rivet SD DG MLE
Pitch	Gauge	Chain Type	Drive Links	Bar Length	Drive Teeth	Armor Tip	PowerMatch®	Pro-Lite® MG MP	Pro-Lite® SLG SLH GL GP SP	Pro-Lite® SLB	Pro-Am®	DoubleGuard®
Craftsman												
172.43983												
3/8 low profile	.050	**ControlCut** 91PXL **AdvanceCut** 91PX	**VersaCut** 91VXL	040	10							
Pole Saw Model†: 79240, 79245, 79246												
3/8 low profile	.043	**AdvanceCut** 90PX		034	8	5						084MLEA041
				040	10	5						
Cordless Electric: 34130, 34131												
3/8 low profile	.043	**AdvanceCut** 90PX		040	10							
Cordless Electric: 98023												
3/8 low profile	.043	**AdvanceCut** 90PX		045	12							124MLEA041
Cordless Electric: 98946												
3/8 low profile	.050	**ControlCut** 91PXL **AdvanceCut** 91PX	**VersaCut** 91VXL	045	12				*120GPEA041*		120SXEA041	120SDEA041
358.38200												
Narrow Kerf												
.325	.050	*95VPX*	**SpeedCut** 95TXL	080	20	7						
35020, 35021, 35119, 35120, 35121, 35492, 35607, 35628, 35633												
	.050	**ControlCut** 20BPX	**PowerCut** 20LPX	066	16	7		160RNBK041		*160GLGK041*		160PXBK041
				072	18	7		180RNBK041		*180GLGK041* 180VXLGK041		180PXBK041
				078	20	7				*200GLGK041*		200PXBK041
.325	Intenz® **											
	.050	**ControlCut** 20BPX	**PowerCut** 20LPX	072	18	7						*180PXBT041*
				078	20	7						200PXBT041
	Narrow Kerf											
	.050	*95VPX*	**SpeedCut** 95TXL	072	18	7		180TXLGK041				180MLBK041

See page FOR 142 for saw chain sharpening tools

* See page FOR 4 for important information on Guard Mate bar-nose tip guards

** See page FOR 4 for important information on Intenz guide bars.

† ANSI B175.1-2012 and CSA Standard Z62.3 regarding reduced kickback does not apply to pole saws or pruners

For the most current fit-up information visit **OregonProducts.com**

Guide Bar & Saw Chain Applications

Saw Chain				Guide Bars									
						DuraCut™ AT	PowerCut™ RN RW GN PM	SpeedCut™ TXL	VersaCut™ VXL	ControlCut™ PXL	AdvanceCut™ SF SX PX GD MLB	Single Rivet SD DG MLE
Pitch	Gauge	Chain Type	Drive Links	Bar Length	Drive Teeth	Armor Tip	PowerMatch®	Pro-Lite® MG MP	Pro-Lite® SLG SLH GL GP SP	Pro-Lite® SLB	Pro-Am®	DoubleGuard®

Craftsman

35212, 35483, 35487, 35608, 35609, 35690, 35885 Electrics (1983 models forward), 35887, 35889

Pitch	Gauge	Chain Type		Drive Links	Bar Length	Drive Teeth	Armor Tip	PowerMatch®	Pro-Lite® MG MP	Pro-Lite® SLG SLH GL GP SP	Pro-Lite® SLB	Pro-Am®	DoubleGuard®
3/8	.050	**AdvanceCut** 72V	**PowerCut** 72EXL, LGX, LPX **VersaCut** 72DPX	057	15	7							
				060	16	7	*160ATMD176*	160RNDD176		160VXLHD176		160PXDD176	
				064	18	7				180VXLHD176			
				066	18	7		180RNDD176				180PXDD176	
				070	20	7	200ATMD176	200RNDD176		200VXLHD176		200PXDD176	
				081	24	7		240RNDD176					
				092	28	7		280RNDD176					

35098

3/8	.050	**AdvanceCut** 72V	**PowerCut** 72EXL, LGX, LPX **VersaCut** 72DPX	070	20	7	Original Equipment Guide Bar						
				072	20	7	200ATMK095	200RNDK095		200VXLHK095		200SFHK095	

38188

.325	.050	**ControlCut** 20BPX	**PowerCut** 20LPX	072	18	7				*180SLGK095* 180VXLGK095		180PXBK095	

35084, 35085, 38180, 41AY85AR799

Narrow Kerf

.325	.050	*95VPX*	**SpeedCut** 95TXL	072	18	7			180TXLBK095			180MLBK095	

Cub Cadet

CS3916 — PowerSharp® Compatible

Pitch	Gauge	Chain Type		Drive Links	Bar Length	Drive Teeth	Armor Tip	PowerMatch®	Pro-Lite® MG MP	Pro-Lite® SLG SLH GL GP SP	Pro-Lite® SLB	Pro-Am®	DoubleGuard®
3/8 low profile	.050	**ControlCut** 91PXL **AdvanceCut** 91PX	**VersaCut** 91VXL	052	14	6						140SXEA041	140SDEA041
				057	16	6				*160GPEA041*		160SXEA041	160SDEA041
				062	18	6							180SDEA041

CS5018, CS5220

.325	.050	**ControlCut** 20BPX	**PowerCut** 20LPX	066	16	7	*160ATMZ095*	160RNBK095		*160SLGK095* 160VXLGK095		*160PXBK095*	
				072	18	7	*180ATMZ095*					180PXBK095	
				072	18	8				*180SLGK095* 180VXLGK095			
				078	20	7	200ATMZ095	200RNBK095		*200SLGK095* 200VXLGK095		200PXBK095	

CS5720

3/8	.050	**AdvanceCut** 72V	**PowerCut** 72EXL, **LGX, LPX** **VersaCut** 72DPX	060	16	7	160ATMK095	160RNDK095		160VXLHK095			
				068	18	7	180ATMK095	180RNDK095		*180SLHK095* 180VXLHK095			
				072	20	7	200ATMK095	200RNDK095		200VXLHK095			
				084	24	7		240RNDK095					

See our guides for chainsaws with a **green triangle** on pages FOR 2–3

See our guides for chainsaws with a **yellow triangle** on pages FOR 2–3

Saw chain complies with low kickback performance requirements (FOR 2–3)

Saw chain does not comply with low kickback performance requirements (FOR 2–3)

For information on our PowerSharp Kits see pages FOR 136–137

For Bar & Chain Combos see pages FOR 100–101

Part numbers printed in *red italics* have been obsoleted. Contact your authorized Oregon distributor for availability.

Guide Bar & Saw Chain Applications

Saw Chain						Guide Bars						
						DuraCut™ AT	PowerCut™ RN RW GN PM	SpeedCut™ TXL	VersaCut™ VXL	ControlCut™ PXL	AdvanceCut™ SF SX PX GD MLB	Single Rivet SD DG MLE
Pitch	Gauge	Chain Type	Drive Links	Bar Length	Drive Teeth	Armor Tip	PowerMatch®	Pro-Lite® MG MP	Pro-Lite® SLG SLH GL GP SP	Pro-Lite® SLB	Pro-Am®	DoubleGuard®
DeWalt												
DCCS690M1, DCCS690H1, DCCS690X1, DCCS690B, DCCS670X1												
3/8 low profile	.043	**AdvanceCut** 90PX	056	16								164MLEA041
DCCS620B												
3/8 low profile	.043	**AdvanceCut** 90PX	045	12								124MLEA041
Dolmar												
109, 110, 111, 115, 115i, 116, 116si, 117, 119, 120, PS-460, PS-510, PS-540, PS-5100S, PS-5105, PS-5105H, PS-6100, PS-6100H												
.325	.050	**ControlCut** 20BPX	066	16	7	160ATMZ095	160RNBK095		*160SLGK095* 160VXLGK095		*160PXBK095*	
			072	18	7	180ATMZ095					180PXBK095	
			072	18	8				*180SLGK095* 180VXLGK095			
			078	20	7	200ATMZ095	200RNBK095		*200SLGK095* 200VXLGK095		200PXBK095	
	.058	**ControlCut** 21BPX	056	13	7					*138SLBK095* 138PXLBK095		
			064	15	7		158RNBK095		158VXLGK095	158PXLBK095		
			066	16	7		168RNBK095		168VXLGK095	*168SLBK095* 168PXLBK095	168SFGK095 168PXBK095	
			072	18	7		188RNBK095		*188SLGK095* 188VXLGK095	188PXLBK095	188SFGK095 188PXBK095	
			078	20	7		208RNBK095		*208SLGK095* 208VXLGK095		208PXBK095 208SFGK095	
	Narrow Kerf											
	.050	*95VPX* **SpeedCut** 95TXL	056	13	7			*130MPBK095* 130TXLBK095			130MLBK095	
			064	15	7			150TXLBK095			150MLBK095	
			066	16	7			*160MPBK095* 160TXLBK095			160MLBK095	
			072	18	7			180TXLBK095			180MLBK095	
			078	20	7			200TXLBK095				
3/8	.050	**AdvanceCut** 72V	059	16	7						160PXDK095	
			060	16	7	*160ATMK095*	160RNDK095		160VXLHK095		160SFHK095	
			064	18	7	*180ATMZ095*						
			070	20	7	200ATMZ095						
			072	20	7		200RNDK095		200VXLHK095		200SFHK095	
			084	24	7		240RNDK095					
	.058	**AdvanceCut** 73V	059	16	7							
			060	16	7	168ATMK095	168RNDK095		168VXLHK095		168SFHK095	
			064	18	7		188RNDZ095		*188SLHK095* 188VXLHK095			
			072	20	7		208RNDK095		208VXLHK095		208SFHK095	
			084	24	7		248RNDK095					

See page FOR 142 for saw chain sharpening tools

* See page FOR 4 for important information on Guard Mate bar-nose tip guards

** See page FOR 4 for important information on Intenz guide bars.

† ANSI B175.1-2012 and CSA Standard Z62.3 regarding reduced kickback does not apply to pole saws or pruners

For the most current fit-up information visit **OregonProducts.com**

Guide Bar & Saw Chain Applications

Saw Chain | **Guide Bars**

Pitch	Gauge	Chain Type	Drive Links	Bar Length	Drive Teeth	DuraCut™ AT Armor Tip	PowerCut™ RN RW GN PM PowerMatch®	SpeedCut™ TXL MG MP Pro-Lite®	VersaCut™ VXL SLG SLH GL GP SP Pro-Lite®	ControlCut™ PXL SLB Pro-Lite®	AdvanceCut™ SF SX PX GD MLB Pro-Am®	Single Rivet SD DG MLE DoubleGuard®
Dolmar												
100, 101, 102, 103, 104, 105, 108, ES-161, ES-171, ES-173A, PS-32, PS-34, PS-35, PS-45, PS-340, PS-341, PS-350, PS-400, PS-401, PS-420, PS-3300TH, PS-3410TH, PS-3410TH TLC — PowerSharp® Compatible												
	.050	**ControlCut** 91PXL **AdvanceCut** 91PX	**VersaCut** 91VXL	045	12	6				*120SPEA041*		120SXEA041	120SDEA041
				052	14	6						140SXEA041	140SDEA041
				056	16	6						160SXEA041	160SDEA041
				062	18	6							180SDEA041
	Intenz® **												
3/8 low profile	.050	**ControlCut** 91PXL **AdvanceCut** 91PX	**VersaCut** 91VXL	045	12	6							
				052	14	6				*140SPET041*			140SDET041
				056	16	6				*160GPET041* *160SPET041*			160SDET041
				062	18	6							180SDET041
	.043	**AdvanceCut** 90PX		045	12	6							124MLEA041
				052	14	6							144MLEA041
				056	16	6							*164MLEA041*
PS-351, PS-421												
3/8 low profile	.050	**ControlCut** 91PXL **AdvanceCut** 91PX	**VersaCut** 91VXL	045	12	6				*120SPEA041*		120SXEA041	120SDEA041
				052	14	6						140SXEA041	140SDEA041
				056	16	6						160SXEA041	160SDEA041
	Narrow Kerf												
.325	.050	*95VPX*	**SpeedCut** 95TXL	056	13	7						130MLBK041	
				064	15	7						150MLBK041	
				072	18	7		180TXLGK041				180MLBK041	
112, 113, 114, 118, PS-6800i												
3/8	.050	**AdvanceCut** 72V	**PowerCut** 72EXL, LGX, LPX **VersaCut** 72DPX	059	16	7	*160ATMZ095*					160PXDK095	
				060	16	7	160ATMK095	160RNDK095		160VXLHK095		160SFHK095	
				064	18	7	*180ATMZ095*						
				070	20	7	200ATMZ095						
				072	20	7		200RNDK095		200VXLHK095		200SFHK095	
				084	24	7		240RNDK095					
	.058	**AdvanceCut** 73V	**PowerCut** 73EXL, LGX, LPX **VersaCut** 73DPX	059	16	7							
				060	16	7	168ATMK095	168RNDK095		168VXLHK095		168SFHK095	
				064	18	7		188RNDZ095		*188SLHK095* 188VXLHK095			
				072	20	7		208RNDK095		208VXLHK095		208SFHK095	
				084	24	7		248RNDK095					

See our guides for chainsaws with a **green triangle** on pages FOR 2–3

See our guides for chainsaws with a **yellow triangle** on pages FOR 2–3

Saw chain complies with low kickback performance requirements (FOR 2–3)

Saw chain does not comply with low kickback performance requirements (FOR 2–3)

For information on our PowerSharp Kits see pages FOR 136–137

For Bar & Chain Combos see pages FOR 100–101

Part numbers printed in *red italics* have been obsoleted. Contact your authorized Oregon distributor for availability.

Guide Bar & Saw Chain Applications

Saw Chain				Guide Bars									
						DuraCut™ AT	PowerCut™ RN RW GN PM	SpeedCut™ TXL	VersaCut™ VXL	ControlCut™ PXL	AdvanceCut™ SF SX PX GD MLB	Single Rivet SD DG MLE
Pitch	Gauge	Chain Type	Drive Links	Bar Length	Drive Teeth	Armor Tip	PowerMatch®	Pro-Lite® MG MP	Pro-Lite® SLG SLH GL GP SP	Pro-Lite® SLB	Pro-Am®	DoubleGuard®

Dolmar

122, 123, 133, 143, 144, 152, 153, 166, CA

Pitch	Gauge	Chain Type		Drive Links	Bar Length	Drive Teeth	Armor Tip	PowerMatch®	Pro-Lite® MG MP	Pro-Lite® SLG SLH GL GP SP	Pro-Lite® SLB	Pro-Am®	DoubleGuard®
3/8	.050	**AdvanceCut** 72V	**PowerCut** 72EXL, LGX, LPX **VersaCut** 72DPX	072	20	7							
				081	24	7							
	.058	**AdvanceCut** 73V	**PowerCut** 73EXL, LGX, LPX **VersaCut** 73DPX	064	17	7							
				072	20	7		208RNDD033					
				089	26	7							
				092	28	7							
	.063	**AdvanceCut** 75V	**PowerCut** 75EXL, LGX, LPX **VersaCut** 75DPX	064	17	8							
				110	32	7							
				119	36	7							

PS-6400, PS-6400H, PS-6400W, PS-7300, PS-7300H, PS-7300W, PS-7310, PS-7310H, PS-7900, PS-7900H, PS-7900W, PS-7910, PS-7910H, PS-7910W, PS-7910XD, PS-9000, PS-9010, PS- 9010FL...

Pitch	Gauge	Chain Type		Drive Links	Bar Length	Drive Teeth	Armor Tip	PowerMatch®	Pro-Lite® MG MP	Pro-Lite® SLG SLH GL GP SP	Pro-Lite® SLB	Pro-Am®	DoubleGuard®
3/8	.050	**AdvanceCut** 72V	**PowerCut** 72EXL, LGX, LPX **VersaCut** 72DPX	060	16	8		160RNDD009		160VXLHD009			
				068	18	8	*180ATMD009*	180RNDD009		*180SLHD009* 180VXLHD009			
				072	20	8	200ATMD009	200RNDD009		200VXLHD009		200SFHD009	
				076	22	7							
				084	24	8	240ATMD009	240RNDD009				240SFHD009	
				092	28	7		280RNDD009					
				093	28	7		280RWDD009					
				098	30	7		300RNDD009					
				105	32	7		320RNDD009 320RWDD009					
	.058	**AdvanceCut** 73V	**PowerCut** 73EXL, LGX, LPX **VersaCut** 73DPX	060	16	8	168ATMD009	168RNDD009		168VXLHD009		168SFHD009	
				068	18	8	188ATMD009	188RNDD009		188VXLHD009		188SFHD009	
				072	20	8	208ATMD009	208RNDD009		*208SLHD009* 208VXLHD009		208SFHD009	
				076	22	7		228RNDD009					
				084	24	7	248ATMD009	248RNDD009				248SFHD009	
				089	26	8		268RNDD009					
				092	28	7	288ATMD009	288RNDD009					
				102	30	8		308RNDD009					
				105	32	8		*328RNDD009*					
				110	33	8							
				110	33	7		338RWDD009 338PMDD009					
				115	36	7		*368RNDD009*					
				119	37	7		378RWDD009 378PMDD009					

See page FOR 142 for saw chain sharpening tools

* See page FOR 4 for important information on Guard Mate bar-nose tip guards

** See page FOR 4 for important information on Intenz guide bars.

† ANSI B175.1-2012 and CSA Standard Z62.3 regarding reduced kickback does not apply to pole saws or pruners

For the most current fit-up information visit **OregonProducts.com**

Guide Bar & Saw Chain Applications

Saw Chain				Guide Bars									
						DuraCut™ AT	PowerCut™ RN RW GN PM	SpeedCut™ TXL	VersaCut™ VXL	ControlCut™ PXL	AdvanceCut™ SF SX PX GD MLB	Single Rivet SD DG MLE
Pitch	Gauge	Chain Type	Drive Links	Bar Length	Drive Teeth	Armor Tip	PowerMatch®	Pro-Lite® MG MP	Pro-Lite® SLG SLH GL GP SP	Pro-Lite® SLB	Pro-Am®	DoubleGuard®

Dolmar

...PS-6400, PS-6400H, PS-6400W, PS-7300, PS-7300H, PS-7300W, PS-7310, PS-7310H, PS-7900, PS-7900H, PS-7900W, PS-7910, PS-7910H, PS-7910W, PS-7910XD, PS-9000, PS-9010, PS- 9010FL

Pitch	Gauge	Chain Type		Drive Links	Bar Length	Drive Teeth	Armor Tip	PowerMatch®	Pro-Lite® MG MP	Pro-Lite® SLG SLH GL GP SP	Pro-Lite® SLB	Pro-Am®	DoubleGuard®
3/8	.063	**AdvanceCut** 75V	**PowerCut** 75EXL, LGX, LPX **VersaCut** 75DPX	072	20	7	203ATMD009	203RNDD009					
				084	24	7	243ATMD009	243RNDD009					
				093	28	7		283RNDD009 283RWDD009					
				098	30	7							
				105	32	7		323RNDD009 323RWDD009					
				110	34	7		343RNDD009					
				115	36	7		363RNDD009 363RWDD009					

PS-9000, PS-9010, PS-9010FL

Pitch	Gauge	Chain Type		Drive Links	Bar Length	Drive Teeth	Armor Tip	PowerMatch®	Pro-Lite® MG MP	Pro-Lite® SLG SLH GL GP SP	Pro-Lite® SLB	Pro-Am®	DoubleGuard®
.404	.063		**PowerCut** 59L, 68LX **VersaCut** 27X	065	20	7							

Earthquake

CS3816, CS4116, CS3814

Pitch	Gauge	Chain Type		Drive Links	Bar Length	Drive Teeth	Armor Tip	PowerMatch®	Pro-Lite® MG MP	Pro-Lite® SLG SLH GL GP SP	Pro-Lite® SLB	Pro-Am®	DoubleGuard®
3/8 low profile	.050	**ControlCut** 91PXL **AdvanceCut** 91PX	**VersaCut** 91VXL	052	14	6						40SXEA041	140SDEA041
				056	16	6				*160GPEA041*		160SXEA041	160SDEA041
				062	18	6							180SDEA041

CS4518, CS4518B

Pitch	Gauge	Chain Type		Drive Links	Bar Length	Drive Teeth	Armor Tip	PowerMatch®	Pro-Lite® MG MP	Pro-Lite® SLG SLH GL GP SP	Pro-Lite® SLB	Pro-Am®	DoubleGuard®
3/8 low profile	.050	**ControlCut** 91PXL **AdvanceCut** 91PX	**VersaCut** 91VXL	062	18	6							

Earthwise

CCS30008, CPS40108, CVPS41008, LPS40208, NVPS42108, PS40008

Pitch	Gauge	Chain Type		Drive Links	Bar Length	Drive Teeth	Armor Tip	PowerMatch®	Pro-Lite® MG MP	Pro-Lite® SLG SLH GL GP SP	Pro-Lite® SLB	Pro-Am®	DoubleGuard®
3/8 low profile	.050	**ControlCut** 91PXL **AdvanceCut** 91PX	**VersaCut** 91VXL	033	8								080SDEA041

CPS40110, LCS32010, LPS4210, PS40010

Pitch	Gauge	Chain Type		Drive Links	Bar Length	Drive Teeth	Armor Tip	PowerMatch®	Pro-Lite® MG MP	Pro-Lite® SLG SLH GL GP SP	Pro-Lite® SLB	Pro-Am®	DoubleGuard®
3/8 low profile	.050	**ControlCut** 91PXL **AdvanceCut** 91PX	**VersaCut** 91VXL	040	10								100SDEA041

LCS32412

Pitch	Gauge	Chain Type		Drive Links	Bar Length	Drive Teeth	Armor Tip	PowerMatch®	Pro-Lite® MG MP	Pro-Lite® SLG SLH GL GP SP	Pro-Lite® SLB	Pro-Am®	DoubleGuard®
3/8 low profile	.050	**ControlCut** 91PXL **AdvanceCut** 91PX	**VersaCut** 91VXL	045	12	6				*120SPEA041*		120SXEA041,	120SDEA041

See our guides for chainsaws with a **green triangle** on pages FOR 2–3

See our guides for chainsaws with a **yellow triangle** on pages FOR 2–3

Saw chain complies with low kickback performance requirements (FOR 2–3)

Saw chain does not comply with low kickback performance requirements (FOR 2–3)

For information on our PowerSharp Kits see pages FOR 136–137

For Bar & Chain Combos see pages FOR 100–101

Part numbers printed in *red italics* have been obsoleted. Contact your authorized Oregon distributor for availability.

Guide Bar & Saw Chain Applications

Saw Chain						Guide Bars						
						DuraCut™ AT	PowerCut™ RN RW GN PM	SpeedCut™ TXL	VersaCut™ VXL	ControlCut™ PXL	AdvanceCut™ SF SX PX GD MLB	Single Rivet SD DG MLE
Pitch	Gauge	Chain Type	Drive Links	Bar Length	Drive Teeth	Armor Tip	PowerMatch®	Pro-Lite® MG MP	Pro-Lite® SLG SLH GL GP SP	Pro-Lite® SLB	Pro-Am®	DoubleGuard®

Earthwise

CS30014, YT4729

Pitch	Gauge	Chain Type		Drive Links	Bar Length	Drive Teeth	Armor Tip	PowerMatch®	Pro-Lite® MG MP	Pro-Lite® SLG SLH GL GP SP	Pro-Lite® SLB	Pro-Am®	DoubleGuard®
3/8 low profile	.050	**ControlCut** 91PXL **AdvanceCut** 91PX	**VersaCut** 91VXL	045	12	6				*120SPEA041*		120SXEA041	120SDEA041
				052	14	6				,		140SXEA041	140SDEA041,

CS30016, CS30116

Pitch	Gauge	Chain Type		Drive Links	Bar Length	Drive Teeth	Armor Tip	PowerMatch®	Pro-Lite® MG MP	Pro-Lite® SLG SLH GL GP SP	Pro-Lite® SLB	Pro-Am®	DoubleGuard®
3/8 low profile	.050	**ControlCut** 91PXL **AdvanceCut** 91PX	**VersaCut** 91VXL	056	16	6				*160GPEA041*		160SXEA041	160SDEA041
				057	16	6	Original Equipment Bar						

Echo*

CS-280E, CS-280EP, CS-290, CS-300, CS-300EVL, CS-301, CS-302 (After #0015304), CS-302S, CS303T, CS-305, CS-306, CS-310, CS-315, CS-330EVL, CS-330MX4, CS-330T, CS-340, CS-341, CS-345, CS-346, CS-351 (After #0112195), CS-352, CS-355T, CS-360, CS-360T, CS-370, CS-370F, CS-370T, CS-400, CS-400F, CS-3000, CS-3400, CS-3450, ECS-2000, ECS-3000 — PowerSharp® Compatible

Pitch	Gauge	Chain Type		Drive Links	Bar Length	Drive Teeth	Armor Tip	PowerMatch®	Pro-Lite® MG MP	Pro-Lite® SLG SLH GL GP SP	Pro-Lite® SLB	Pro-Am®	DoubleGuard®
	.050	**ControlCut** 91PXL **AdvanceCut** 91PX	**VersaCut** 91VXL	045	12	6						120SXEA041	120DGEA041
				052	14	6						140SXEA041	140DGEA041
				056	16	6						160SXEA041	160DGEA041
				057	16	6	Original Equipment Guide Bar						
				062	18	6							180DGEA041
	Intenz® **												
3/8 low profile	.050	**ControlCut** 91PXL **AdvanceCut** 91PX	**VersaCut** 91VXL	045	12	6							120DGET041
				052	14	6							140DGET041
				056	16	6				*160GPET041*			160DGET041
				057	16	6	Original Equipment Guide Bar						
	.043	**AdvanceCut** 90PX		045	12	6							124MLEA041
				052	14	6							144MLEA041
				056	16	6							*164MLEA041*

CS-271T

Pitch	Gauge	Chain Type		Drive Links	Bar Length	Drive Teeth	Armor Tip	PowerMatch®	Pro-Lite® MG MP	Pro-Lite® SLG SLH GL GP SP	Pro-Lite® SLB	Pro-Am®	DoubleGuard®
3/8 low profile	.050	**ControlCut** 91PXL **AdvanceCut** 91PX	**VersaCut** 91VXL	040	10	6							100SDEA041
				045	12	6				*120GPEA041*			120DGEA041
	.043	**AdvanceCut** 90PX		040	10	6							
				045	12	6							124MLEA041

See page FOR 142 for saw chain sharpening tools

* See page FOR 4 for important information on Guard Mate bar-nose tip guards

** See page FOR 4 for important information on Intenz guide bars.

† ANSI B175.1-2012 and CSA Standard Z62.3 regarding reduced kickback does not apply to pole saws or pruners

For the most current fit-up information visit **OregonProducts.com**

Guide Bar & Saw Chain Applications

Saw Chain | **Guide Bars**

Pitch	Gauge	Chain Type	Drive Links	Bar Length	Drive Teeth	DuraCut™ AT	PowerCut™ RN RW GN PM	SpeedCut™ TXL	VersaCut™ VXL	ControlCut™ PXL	AdvanceCut™ SF SX PX GD MLB	Single Rivet SD DG MLE
						Armor Tip	PowerMatch®	Pro-Lite® MG MP	Pro-Lite® SLG SLH GL GP SP	Pro-Lite® SLB	Pro-Am®	DoubleGuard®

Echo*

PPF-225, PPF-280, PPT-265, PPT-265H, PPT-265S, PPT-266, PPT-266H, PPT-266S, PPT-280 — PowerSharp® Compatible

Pitch	Gauge	Chain Type	Chain Type	Drive Links	Bar Length	Drive Teeth	Armor Tip	PowerMatch®	Pro-Lite® MG MP	Pro-Lite® SLG SLH GL GP SP	Pro-Lite® SLB	Pro-Am®	DoubleGuard®
	.050	**ControlCut** 91PXL **AdvanceCut** 91PX	**VersaCut** 91VXL	039	10	6	Original Equipment Guide Bar						
				040	10	6							100SDEA041
				044	12	6	Original Equipment Guide Bar						
				045	12	6				*120GPEA041*			120DGEA041
				049	14	6	Original Equipment Guide Bar						
				052	14	6							140DGEA041
	Intenz® **												
3/8 low profile	.050	**ControlCut** 91PXL **AdvanceCut** 91PX	**VersaCut** 91VXL	045	12	6							120DGET041
				052	14	6							140DGET041
	.043	**AdvanceCut** 90PX		039	10	6	Original Equipment Guide Bar						
				040	10	6							
				044	12	6	Original Equipment Guide Bar						
				045	12	6							124MLEA041
				049	14	6	Original Equipment Guide Bar						
				052	14	6							144MLEA041

Pole Saws† PPF-210, PPF-211, PPT-230, PPT-231, PPT-260, PPT-261; Power Pruner: PP300, PP400, PP600, PP800, PP1200, PP1250, PP1260, PP1400, PP1400-D, PPF-2100, PPF-2400, PPSR-2122, PPSR-2433, PPT-2100, PPT-2400

Pitch	Gauge	Chain Type	Chain Type	Drive Links	Bar Length	Drive Teeth	Armor Tip	PowerMatch®	Pro-Lite® MG MP	Pro-Lite® SLG SLH GL GP SP	Pro-Lite® SLB	Pro-Am®	DoubleGuard®
	.050	**ControlCut** 91PXL **AdvanceCut** 91PX	**VersaCut** 91VXL	034	8	6							
				039	10	6							100SDEA218
				044	12	6							120SDEA218
	Intenz **												
3/8 low profile	.050	**ControlCut** 91PXL **AdvanceCut** 91PX	**VersaCut** 91VXL	044	12	6							120SDET218
	.043	**AdvanceCut** 90PX		039	10	6							104MLEA218
				044	12	6							124MLEA218

CS-400EVL, CS-440, CS-440EVL, CS-510, CS-520, CS-3600, CS-3900, CS-4000, CS-4100, CS-4400, CS-4500, CS-4600, CS-5000

Pitch	Gauge	Chain Type	Chain Type	Drive Links	Bar Length	Drive Teeth	Armor Tip	PowerMatch®	Pro-Lite® MG MP	Pro-Lite® SLG SLH GL GP SP	Pro-Lite® SLB	Pro-Am®	DoubleGuard®
	.050	**ControlCut** 20BPX	**PowerCut** 20LPX	066	16	7				*160GLGK041*		160GDBK041	
				072	18	7				*180GLGK041*		180GDBK041	
				078	20	7				*200GLGK041*		200GDBK041	
.325	Narrow Kerf												
	.050	*95VPX*	**SpeedCut** 95TXL	056	13	7						130MLBK041	
				064	15	7						150MLBK041	
				066	16	7			160TXLGK041			160MLBK041	
				072	18	7			180TXLGK041			180MLBK041	

See our guides for chainsaws with a **green triangle** on pages FOR 2–3

See our guides for chainsaws with a **yellow triangle** on pages FOR 2–3

Saw chain complies with low kickback performance requirements (FOR 2–3)

Saw chain does not comply with low kickback performance requirements (FOR 2–3)

For information on our PowerSharp Kits see pages FOR 136–137

For Bar & Chain Combos see pages FOR 100–101

Part numbers printed in *red italics* have been obsoleted. Contact your authorized Oregon distributor for availability.

Guide Bar & Saw Chain Applications

Saw Chain				Guide Bars									
						DuraCut™ AT	PowerCut™ RN RW GN PM	SpeedCut™ TXL	VersaCut™ VXL	ControlCut™ PXL	AdvanceCut™ SF SX PX GD MLB	Single Rivet SD DG MLE
Pitch	Gauge	Chain Type	Drive Links	Bar Length	Drive Teeth	Armor Tip	PowerMatch®	Pro-Lite® MG MP	Pro-Lite® SLG SLH GL GP SP	Pro-Lite® SLB	Pro-Am®	DoubleGuard®

Echo*

Pitch	Gauge	Chain Type		Drive Links	Bar Length	Drive Teeth	Armor Tip	PowerMatch®	Pro-Lite® MG MP	Pro-Lite® SLG SLH GL GP SP	Pro-Lite® SLB	Pro-Am®	DoubleGuard®
CS-450, CS-450P, CS-490, CS-500P, CS-501P, CS-530, CS-550P													
.325	.050	**ControlCut** 20BPX	**PowerCut** 20LPX	066	16	7				160VXLGK216			
				072	18	7				*180GLGK216* 180VXLGK216			
				078	20	7				*200GLGK216* 200VXLGK216			
	.058	**ControlCut** 21BPX	**PowerCut** 21LPX	066	16	7				*168SLGK216*			
				072	18	7				*188SLGK216*			
				078	20	7							
	Narrow Kerf												
	.050	*95VPX*	**SpeedCut** 95TXL	066	16	7			160TXLGK216				
				072	18	7			180TXLGK216				
CS-5500													
.325	.050	**ControlCut** 20BPX	**PowerCut** 20LPX	068	16	7							
				079	20	7	200ATMD176						
				091	24	7							
CS-60, CS-60S, CS-451, CS-452, CS-500EVL, CS-510EVL, CS-550EVL, CS-590, CS-600P, CS-601, CS-602, CST-610, CS-620P, CS-620PW, CS-706													
3/8	.050	**AdvanceCut** 72V	**PowerCut** 72EXL, LGX, LPX **VersaCut** 72DPX	060	16	7		160RNDD176		*160GLHD176*			
				064	18	7				180VXLHD176			
				066	18	7		180RNDD176					
				070	20	7	200ATMD176	200RNDD176		*200GLHD176*		200GDDD176	
				081	24	7		240RNDD176					
				084	24	7	240ATMD176						
				093	27	7							
CS-4510													
.325	.050	**ControlCut** 20BPX	**PowerCut** 20LPX	066	16	7		160RNBK095		160VXLGK095			
				072	18	7				180VXLGK095		180PXBK095	
				078	20	7	200ATMZ095	200RNBK095		200VXLGK095		200PXBK095	
	Narrow Kerf												
	.050	*95VPX*	**SpeedCut** 95TXL	066	16	7			160TXLBK095			160MLBK095	
				072	18	7			180TXLBK095			180MLBK095	
				078	20	7			200TXLBK095				

See page FOR 142 for saw chain sharpening tools

* See page FOR 4 for important information on Guard Mate bar-nose tip guards

** See page FOR 4 for important information on Intenz guide bars.

† ANSI B175.1-2012 and CSA Standard Z62.3 regarding reduced kickback does not apply to pole saws or pruners

For the most current fit-up information visit **OregonProducts.com**

Guide Bar & Saw Chain Applications

Saw Chain | **Guide Bars**

Pitch	Gauge	Chain Type	Drive Links	Bar Length	Drive Teeth	DuraCut™ Armor Tip	PowerCut™ PowerMatch®	SpeedCut™ Pro-Lite® MG MP	VersaCut™ Pro-Lite® SLG SLH GL GP SP	ControlCut™ Pro-Lite® SLB	AdvanceCut™ Pro-Am®	Single Rivet DoubleGuard®
						AT	RN RW GN PM	TXL	VXL	PXL	SF SX PX GD MLB	SD DG MLE

Echo* ▲

CS-650EVL, CS-660, CS-670, CS-680, CS-701, CS-702, CS-750EVL, CS-800P, CS-6700, CS-8000

Pitch	Gauge	Chain Type		Drive Links	Bar Length	Drive Teeth	DuraCut™ Armor Tip	PowerCut™ PowerMatch®	SpeedCut™ Pro-Lite® MG MP	VersaCut™ Pro-Lite® SLG SLH GL GP SP	ControlCut™ Pro-Lite® SLB	AdvanceCut™ Pro-Am®	Single Rivet DoubleGuard®
3/8	.050	**AdvanceCut** 72V	**PowerCut** 72EXL, LGX, LPX **VersaCut** 72DPX	060	16	7		*160GNDD176* 160RNDD176		*160GLHD176*			
				064	18	7				180VXLHD176			
				066	18	7		180RNDD176					
				070	20	7	200ATMD176	*200GNDD176*		*200GLHD176*		200GDDD176	
				081	24	7		*240GNDD176* 240RNDD176					
				084	24	7	240ATMD176						
				093	27	7		*270GNDD176*					
				105	32	7		*320GNDD176*					
				116	36	7		*360GNDD176*					

CS-900, CS-1001

Pitch	Gauge	Chain Type		Drive Links	Bar Length	Drive Teeth	DuraCut™ Armor Tip	PowerCut™ PowerMatch®	SpeedCut™ Pro-Lite® MG MP	VersaCut™ Pro-Lite® SLG SLH GL GP SP	ControlCut™ Pro-Lite® SLB	AdvanceCut™ Pro-Am®	Single Rivet DoubleGuard®
3/8	.050	**AdvanceCut** 72V	**PowerCut** 72EXL, LGX, LPX **VersaCut** 72DPX	060	16	7	*160ATMD196*	*160RNDD196*				160GDDD096	
				064	18	8							
				066	18	7							
				070	20	7		*200GNDD196* 200RNDD196		*200GLHD196*		200GDDD096	
				081	24	7		240RNDD196					
				093	27	7		*270GNDD196*					
	.063	**AdvanceCut** 75V	**PowerCut** 75EXL, LGX, LPX **VersaCut** 75DPX	079	21	7	213ATMD196						

Efco ▲

132S, MT 3600, MT 3700, MT 3750, MT 4000, MT 4100

PowerSharp® Compatible

Pitch	Gauge	Chain Type		Drive Links	Bar Length	Drive Teeth	DuraCut™ Armor Tip	PowerCut™ PowerMatch®	SpeedCut™ Pro-Lite® MG MP	VersaCut™ Pro-Lite® SLG SLH GL GP SP	ControlCut™ Pro-Lite® SLB	AdvanceCut™ Pro-Am®	Single Rivet DoubleGuard®
3/8 low profile	.050	**ControlCut** 91PXL **AdvanceCut** 91PX	**VersaCut** 91VXL	045	12	6				*120SPEA041*		120SXEA041	120SDEA041
				052	14	6						140SXEA041	140SDEA041
				056	16	6						160SXEA041	160SDEA041
				057	16	6	Original Equipment Guide Bar						

MT 3500

Pitch	Gauge	Chain Type		Drive Links	Bar Length	Drive Teeth	DuraCut™ Armor Tip	PowerCut™ PowerMatch®	SpeedCut™ Pro-Lite® MG MP	VersaCut™ Pro-Lite® SLG SLH GL GP SP	ControlCut™ Pro-Lite® SLB	AdvanceCut™ Pro-Am®	Single Rivet DoubleGuard®
3/8 low profile	.050	**ControlCut** 91PXL **AdvanceCut** 91PX	**VersaCut** 91VXL	053	14	6						140SXEA041	140SDEA041
				056	16	6						160SXEA041	160SDEA041
				057	16	6	Original Equipment Guide Bar						

MT 3500 SS

PowerSharp Equipped

Pitch	Gauge	Chain Type		Drive Links	Bar Length	Drive Teeth	DuraCut™ Armor Tip	PowerCut™ PowerMatch®	SpeedCut™ Pro-Lite® MG MP	VersaCut™ Pro-Lite® SLG SLH GL GP SP	ControlCut™ Pro-Lite® SLB	AdvanceCut™ Pro-Am®	Single Rivet DoubleGuard®
3/8 low profile	.050	**PowerSharp®** 91PS		053	14	6							140SDEA041
				057	16	6							160SDEA041

▲ See our guides for chainsaws with a **green triangle** on pages FOR 2–3

▲ See our guides for chainsaws with a **yellow triangle** on pages FOR 2–3

Saw chain complies with low kickback performance requirements (FOR 2–3)

Saw chain does not comply with low kickback performance requirements (FOR 2–3)

For information on our PowerSharp Kits see pages FOR 136–137

For Bar & Chain Combos see pages FOR 100–101

Part numbers printed in *red italics* have been obsoleted. Contact your authorized Oregon distributor for availability.

Guide Bar & Saw Chain Applications

Saw Chain				Guide Bars										
							DuraCut™ AT	PowerCut™ RN RW GN PM	SpeedCut™ TXL	VersaCut™ VXL	ControlCut™ PXL	AdvanceCut™ SF SX PX GD MLB	Single Rivet SD DG MLE
Pitch	Gauge	Chain Type	Drive Links	Bar Length	Drive Teeth	Armor Tip	PowerMatch®	Pro-Lite® MG MP	Pro-Lite® SLG SLH GL GP SP	Pro-Lite® SLB	Pro-Am®	DoubleGuard®
Efco													
MT 3750 SS, MT4100 SP SS												PowerSharp Equipped	
3/8 low profile	.050	PowerSharp 91PS	052	14	6								140SDEA041
			057	16	6								160SDEA041
MultiMate Pruner, Pole Pruner† PT 2500, PT 2700, PTX 2500, PTX 2700													
3/8 low profile	.043	AdvanceCut 90PX	039	10	6								104MLEA318
147, 152, MT 5200													
.325	.050	ControlCut 20BPX / PowerCut 20LPX	066	16	7	*160ATMZ095*	160RNBK095			*160SLGK095* 160VXLGK095		*160PXBK095*	
			072	18	7	*180ATMZ095*						180PXBK095	
			072	18	8					*180SLGK095* 180VXLGK095			
			078	20	8	200ATMZ095	200RNBK095			*200SLGK095* 200VXLGK095		200PXBK095	
	.058	ControlCut 21BPX / PowerCut 21LPX	066	16	7					168VXLGK095	*168SLBK095* 168PXLBK095	168SFGK095 168PXBK095	
			072	18	7					*188SLGK095* 188VXLGK095	188PXLBK095	188SFGK095 188PXBK095	
			078	20	7		208RNBKO95					208PXBK095	
MT 4400													
Narrow Kerf													
.325	.050	*95VPX* / SpeedCut 95TXL	066	16	7			160TXLGK041				160MLBK041	
			072	18	7			180TXLGK041				180MLBK041	
Efco													
156, 165													
.325	.058	ControlCut 21BPX / PowerCut 21LPX	066	16	7		168RNBK095				*168SLBK095* 168PXLBK095	168PXBK095	
			072	18	7		188RNBK095				188PXLBK095	188PXBK095	
			078	20	7		208RNBK095					208PXBK095	
3/8	.050	AdvanceCut 72V / PowerCut 72EXL, LGX, LPX / VersaCut 72DPX	060	16	7	160ATMK095	160RNDK095			160VXLHK095		160SFHK095	
			068	18	7	180ATMK095	180RNDK095			*180SLHK095* 180VXLHK095		180SFHK095	
			072	20	7	200ATMK095	200RNDK095			200VXLHK095		200SFHK095	
			084	24	7		240RNDK095						
	.058	AdvanceCut 73V / PowerCut 73EXL, LGX, LPX / VersaCut 73DPX	060	16	7	168ATMK095	168RNDK095			168VXLHK095		168SFHK095	
			068	18	7	188ATMK095	188RNDK095			39450		188SFHK095	
			072	20	7	208ATMK095	208RNDK095			208VXLHK095		208SFHK095	
			077	22	7								
			084	24	7		248RNDK095						

See page FOR 142 for saw chain sharpening tools

* See page FOR 4 for important information on Guard Mate bar-nose tip guards

** See page FOR 4 for important information on Intenz guide bars.

† ANSI B175.1-2012 and CSA Standard Z62.3 regarding reduced kickback does not apply to pole saws or pruners

For the most current fit-up information visit **OregonProducts.com**

Guide Bar & Saw Chain Applications

Saw Chain | **Guide Bars**

Pitch	Gauge	Chain Type	Drive Links	Bar Length	Drive Teeth	DuraCut™ AT Armor Tip	PowerCut™ RN RW GN PM PowerMatch®	SpeedCut™ TXL MG MP Pro-Lite®	VersaCut™ VXL SLG SLH GL GP SP Pro-Lite®	ControlCut™ PXL SLB Pro-Lite®	AdvanceCut™ SF SX PX GD MLB Pro-Am®	Single Rivet SD DG MLE DoubleGuard®
Efco ▲												
181, MT 6500, MT 7200, MT 8200												
3/8	.050	**AdvanceCut** 72V / **PowerCut** 72EXL, LGX, LPX / **VersaCut** 72DPX	060	16	8		160RNDD009		160VXLHD009			
			068	18	8		180RNDD009		*180SLHD009* 180VXLHD009			
			072	20	8	200ATMD009	200RNDD009		200VXLHD009		200SFHD009	
			084	24	7	240ATMD009	240RNDD009				240SFHD009	
			093	28	7		280RWDD009					
	.058	**AdvanceCut** 73V / **PowerCut** 73EXL, LGX, LPX / **VersaCut** 73DPX	060	16	8	168ATMD009	168RNDD009		168VXLHD009		168SFHD009	
			068	18	8	188ATMD009	188RNDD009		188VXLHD009		188SFHD009	
			072	20	8		208RNDD009					
			076	22	7		228RNDD009					
			084	24	8	248ATMD009	248RNDD009				248SFHD009	
			089	26	8		268RNDD009					
			093	28	8		288RNDD009					
Fairmont Hydraulic ▲												
38568, 43177, 43178, HCS513, HCS516, HCS520, HPS513, LimbLopper												
.325	.058	**ControlCut** 21BPX / **PowerCut** 21LPX	056	13	7					*138SLBK095* 138PXLBK095		
			064	15	8		158RNBK095		158VXLGK095	158PXLBK095		
			066	16	7		168RNBK095		168VXLGK095	*168SLBK095* 168PXLBK095	168SFGK095 168PXBK095	
			072	18	8		188RNBK095		*188SLGK095* 188VXLGK095	188PXLBK095	188SFGK095 188PXBK095	
			078	20	7		208RNBK095		*208SLGK095* 208VXLGK095		208PXBK095 208SFGK095	
	Narrow Kerf											
	.050	*95VPX* / **SpeedCut** 95TXL	056	13	7			*130MPBK095* 130TXLBK095			130MLBK095	
			064	15	7			150TXLBK095			150MLBK095	
			066	16	7			*160MPBK095* 160TXLBK095			160MLBK095	
			072	18	7			180TXLBK095			180MLBK095	
			078	20	7			200TXLBK095				

▲ See our guides for chainsaws with a **green triangle** on pages FOR 2–3

▲ See our guides for chainsaws with a **yellow triangle** on pages FOR 2–3

Saw chain complies with low kickback performance requirements (FOR 2–3)

Saw chain does not comply with low kickback performance requirements (FOR 2–3)

For information on our PowerSharp Kits see pages FOR 136–137

For Bar & Chain Combos see pages FOR 100–101

Part numbers printed in *red italics* have been obsoleted. Contact your authorized Oregon distributor for availability.

Guide Bar & Saw Chain Applications

Saw Chain				Guide Bars									
						DuraCut™ AT	PowerCut™ RN RW GN PM	SpeedCut™ TXL	VersaCut™ VXL	ControlCut™ PXL	AdvanceCut™ SF SX PX GD MLB	Single Rivet SD DG MLE
Pitch	Gauge	Chain Type	Drive Links	Bar Length	Drive Teeth	Armor Tip	PowerMatch®	Pro-Lite® MG MP	Pro-Lite® SLG SLH GL GP SP	Pro-Lite® SLB	Pro-Am®	DoubleGuard®

Fairmont Hydraulic

Pitch	Gauge	Chain Type		Drive Links	Bar Length	Drive Teeth	Armor Tip	PowerMatch®	Pro-Lite® MG MP	Pro-Lite® SLG SLH GL GP SP	Pro-Lite® SLB	Pro-Am®	DoubleGuard®
HCS816, HCS820, HCS824													
3/8	.050	**AdvanceCut** 72V	**PowerCut** 72EXL, LGX, LPX **VersaCut** 72DPX	060	16	7	160ATMK095	160RNDK095		160VXLHK095		160SFHK095	
				068	18	7	180ATMK095	180RNDK095		*180SLHK095* 180VXLHK095		180SFHK095	
				072	20	7	200ATMK095	200RNDK095		200VXLHK095		200SFHK095	
				084	24	7		240RNDK095					
	.058	**AdvanceCut** 73V	**PowerCut** 73EXL, LGX, LPX **VersaCut** 73DPX	060	16	7	168ATMK095	168RNDK095		168VXLHK095		168SFHK095	
				068	18	7	188ATMK095	188RNDK095			39450	188SFHK095	
				072	20	7	208ATMK095	208RNDK095		208VXLHK095		208SFHK095	
				077	22	7							
				084	24	7		248RNDK095					
H6220B1, H6310C, H6311C													
3/8	.050	**AdvanceCut** 72V	**PowerCut** 72EXL, LGX, LPX **VersaCut** 72DPX	041	9	7							
H6220B, H6310C1, H6311C1													
3/8	.050	**AdvanceCut** 72V	**PowerCut** 72EXL, LGX, LPX **VersaCut** 72DPX	049	12	7							
H6200B													
3/8	.050	**AdvanceCut** 72V	**PowerCut** 72EXL, LGX, LPX **VersaCut** 72DPX	060	16	7	*160ATMD176*	160RNDD176		*160GLHD176*		160PXDD176	

Greenworks

Pitch	Gauge	Chain Type		Drive Links	Bar Length	Drive Teeth	Armor Tip	PowerMatch®	Pro-Lite® MG MP	Pro-Lite® SLG SLH GL GP SP	Pro-Lite® SLB	Pro-Am®	DoubleGuard®
1400102 24V Li-ION, 20352 24V Li-ION, 20672 40V G-Max, 20302 40V G-Max, 20612 20V Li-ION, 20192 6.5A													
3/8 low profile	.050	**ControlCut** 91PXL **AdvanceCut** 91PX	**VersaCut** 91VXL	033	8								
20062 7A 2-in-1, 20362 24V Li-ION, 2000102 24V Li-ION, 20V Li-ION													
3/8 low profile	.050	**ControlCut** 91PXL **AdvanceCut** 91PX	**VersaCut** 91VXL	040	10	6							100SDEA041
20082 40V, 20202 40V G-Max, 20262 40V G-Max, 20292 40V G-Max, 20297 40V G-Max													
3/8 low profile	.050	**ControlCut** 91PXL **AdvanceCut** 91PX	**VersaCut** 91VXL	045	12	6				*120SPEA041*		120SXEA041	120SDEA041

See page FOR 142 for saw chain sharpening tools

* See page FOR 4 for important information on Guard Mate bar-nose tip guards

** See page FOR 4 for important information on Intenz guide bars.

† ANSI B175.1-2012 and CSA Standard Z62.3 regarding reduced kickback does not apply to pole saws or pruners

For the most current fit-up information visit **OregonProducts.com**

Guide Bar & Saw Chain Applications

Saw Chain				Guide Bars									
						DuraCut™ AT	PowerCut™ RN RW GN PM	SpeedCut™ TXL	VersaCut™ VXL	ControlCut™ PXL	AdvanceCut™ SF SX PX GD MLB	Single Rivet SD DG MLE
Pitch	Gauge	Chain Type	Drive Links	Bar Length	Drive Teeth	Armor Tip	PowerMatch®	Pro-Lite® MG MP	Pro-Lite® SLG SLH GL GP SP	Pro-Lite® SLB	Pro-Am®	DoubleGuard®

Greenworks

20012 9A Electric, 20222 9A Electric

Pitch	Gauge	Chain Type		Drive Links	Bar Length	Drive Teeth	Armor Tip	PowerMatch®	Pro-Lite® MG MP	Pro-Lite® SLG SLH GL GP SP	Pro-Lite® SLB	Pro-Am®	DoubleGuard®
3/8 low profile	.050	**ControlCut** 91PXL **AdvanceCut** 91PX	**VersaCut** 91VXL	052	14	6						140SXEA041	140SDEA041(

20152 DigiPro 40V, 20312 DigiPro G-Max 40V, 20322 DigiPro G-Max 40V

3/8 low profile	.043	**AdvanceCut** 90PX		056	16	6							164MLEA041

20022 12A, 20232 12A, CS60L00, 2002802

3/8 low profile	.050	**ControlCut** 91PXL **AdvanceCut** 91PX	**VersaCut** 91VXL	056	16	6						160SXEA041	160SDEA041

GCS80420, GCS80421, 200002 80V

3/8 low profile	.050	**ControlCut** 91PXL **AdvanceCut** 91PX	**VersaCut** 91VXL	062	18	6							180SDEA041

20032 13A, 20032 14.5

3/8 low profile	.050	**ControlCut** 91PXL **AdvanceCut** 91PX	**VersaCut** 91VXL	063	18	7							180SDEA041

Hitachi

CS36DLP4

3/8 low profile	.050	**ControlCut** 91PXL **AdvanceCut** 91PX	**VersaCut** 91VXL	045	12	6				*120SPEA041*		120SXEA041	120SDEA041

CS33EB

3/8 low profile	.050	**ControlCut** 91PXL **AdvanceCut** 91PX	**VersaCut** 91VXL	045	12	6				*120SPEA041*		120SXEA041	120SDEA041
				052	14	6						140SXEA041	140SDEA041
				056	16	6						160SXEA041	160SDEA041
				057	16	6	Original Equipment Bar						

CSET14

3/8 low profile	.050	**ControlCut** 91PXL **AdvanceCut** 91PX	**VersaCut** 91VXL	045	12	6						120SXEA041	120SDEA041
				052	14	6						140SXEA041	140SDEA041

See our guides for chainsaws with a **green triangle** on pages FOR 2–3

See our guides for chainsaws with a **yellow triangle** on pages FOR 2–3

Saw chain complies with low kickback performance requirements (FOR 2–3)

Saw chain does not comply with low kickback performance requirements (FOR 2–3)

For information on our PowerSharp Kits see pages FOR 136–137

For Bar & Chain Combos see pages FOR 100–101

Part numbers printed in *red italics* have been obsoleted. Contact your authorized Oregon distributor for availability.

Guide Bar & Saw Chain Applications

Saw Chain							Guide Bars						
							DuraCut™ AT	PowerCut™ RN RW GN PM	SpeedCut™ TXL	VersaCut™ VXL	ControlCut™ PXL	AdvanceCut™ SF SX PX GD MLB	Single Rivet SD DG MLE
Pitch	Gauge	Chain Type	Drive Links	Bar Length	Drive Teeth		Armor Tip	PowerMatch®	Pro-Lite® MG MP	Pro-Lite® SLG SLH GL GP SP	Pro-Lite® SLB	Pro-Am®	DoubleGuard®
Hitachi													
CS40EA18													
Narrow Kerf													
.325	.050	*95VPX*	**SpeedCut** 95TXL	072	18	7			180TXLGK041			180MLBK041	
CS51EAP													
.325	.050	**ControlCut** 20BPX	**PowerCut** 20LPX	078	20	7						200GDBK041 200PXBK041 200GLGK041	
Homelite*													
Pruner† UT15520A, Expand-It (attachment)													
3/8 low profile	.043	**AdvanceCut** 90PX		040	10	6							
20, 20AV, 23, 23AV, 3300, 3314, 3316, 3318, 3350, 3550, 3800, 3850, 4500, 4550, D3300, D3350B, D3850, D3850B, i3350B, PS33, RANGER, UT10510, UT10514, UT10516, UT10517, UT10530, UT10530A, UT10540, UT10544, UT10546, UT10548, UT10549, UT10560, UT10564, UT10566, UT10568, UT10569, UT10580, UT10584, UT10586, UT10588, UT10589, UT10640, UT10660, UT10680, UT10901, UT10901A, UT10926, UT10947A, UT10947D, UT10947E, UT43100, UT43102, UT43103, UT43120, UT43122, Z3850, ZR10540, ZR10560, ZR10580; Some saws may take .325" pitch chain, see other applications.													**PowerSharp® Compatible**
3/8 low profile	.050	**ControlCut** 91PXL **AdvanceCut** 91PX	**VersaCut** 91VXL	045	12	6				*120GPEA041*			120DGEA041
				052	14	6							140DGEA041
				056	16	6				*160GPEA041*			160DGEA041
				062	18	6							180DGEA041
180 Series, 190, 192, 240, 240SL, 245 (Before #XE339), Bandit, Classic 192, Electric 200, Little Red, LX-30, Super 2, Super 2CC, VI Super 2, XEL-14, XEL Electric, XL, XL2 (After #504-2001), XL-2CC, XL-10, XL-14, XL-16; Some saws may take .325" pitch chain, see other applications.													
3/8 low profile	.050	**ControlCut** 91PXL **AdvanceCut** 91PX	**VersaCut** 91VXL	048	12	6				*120GPEA061*			120DGEA061
				052	14	6				*140GPEA061*			
				053	14	6							140DGEA061
				059	16	6				*160GPEA061*			160DGEA061
				064	18	6							180DGEA061
				070	20	6							
EL-12, EL-14, EL-16													
3/8 low profile	.050	**ControlCut** 91PXL **AdvanceCut** 91PX	**VersaCut** 91VXL	045	12	5							
				050	14	5							
				056	16	5							*160SDEA089*
25, 27, 4100, 4150, 4500, 4550, d4550b, i3850b, i4150b, i4550b, Super 240, Timberman, UT10518, UT10519, UT10520, ZR10520, UT10522, UT10526, UT10550, UT10552, UT10896, UT10910, UT10927A, UT10942A, UT10946A, ZR10522; Some saws may take 3/8" pitch chain, see other applications.													
.325	.050	**ControlCut** 20BPX	**PowerCut** 20LPX	066	16	7				*160GLGK041*		160PXBK041	
				072	18	7				*180GLGK041*		180PXBK041	
				078	20	7						200PXBK041	
	Intenz® **												
	.050	**ControlCut** 20BPX	**PowerCut** 20LPX	072	18	7						*180PXBT041*	
				078	20	7						200PXBT041	

See page FOR 142 for saw chain sharpening tools

* See page FOR 4 for important information on Guard Mate bar-nose tip guards

** See page FOR 4 for important information on Intenz guide bars.

† ANSI B175.1-2012 and CSA Standard Z62.3 regarding reduced kickback does not apply to pole saws or pruners

For the most current fit-up information visit **OregonProducts.com**

Guide Bar & Saw Chain Applications

Saw Chain				Guide Bars									
						DuraCut™ AT	PowerCut™ RN RW GN PM	SpeedCut™ TXL	VersaCut™ VXL	ControlCut™ PXL	AdvanceCut™ SF SX PX GD MLB	Single Rivet SD DG MLE
Pitch	Gauge	Chain Type	Drive Links	Bar Length	Drive Teeth	Armor Tip	PowerMatch®	Pro-Lite® MG MP	Pro-Lite® SLG SLH GL GP SP	Pro-Lite® SLB	Pro-Am®	DoubleGuard®

Homelite* ▲

25SL, 240, 240SL, 245 (After #XE339); Some saws may take 3/8" pitch chain, see other applications.

Pitch	Gauge	Chain Type		Drive Links	Bar Length	Drive Teeth	Armor Tip	PowerMatch®	Pro-Lite® MG MP	Pro-Lite® SLG SLH GL GP SP	Pro-Lite® SLB	Pro-Am®	DoubleGuard®
.325	.050	**ControlCut** 20BPX	**PowerCut** 20LPX	053	12	7							
				059	14	7							
				067	16	7							

290, CS-40, CS-50; Some saws may take 3/8" pitch chain, see other applications.

Pitch	Gauge	Chain Type		Drive Links	Bar Length	Drive Teeth	Armor Tip	PowerMatch®	Pro-Lite® MG MP	Pro-Lite® SLG SLH GL GP SP	Pro-Lite® SLB	Pro-Am®	DoubleGuard®
.325	.050	**ControlCut** 20BPX	**PowerCut** 20LPX	067	16	7						*160PXBK095*	
				073	18	7						180PXBK095	
				079	20	7						200PXBK095	

30, 130, 150, 150AO, 250, 252, 290, 300 (Before 1989), 340, Big Red, EZ250, EZ250 AO, Mini SL, Super EZ AO, XL-76, XL 100 Series. Some saws may take .325" pitch chain, see other applications.

Pitch	Gauge	Chain Type		Drive Links	Bar Length	Drive Teeth	Armor Tip	PowerMatch®	Pro-Lite® MG MP	Pro-Lite® SLG SLH GL GP SP	Pro-Lite® SLB	Pro-Am®	DoubleGuard®
3/8	.050	**AdvanceCut** 72V	**PowerCut** 72EXL, LGX, LPX **VersaCut** 72DPX	059	16	7	*160ATMZ095*					160PXDK095	
				064	18	7	*180ATMZ095*						
				070	20	7	200ATMZ095						

35SL, 330, 350, 350HG, 350SL, 360, Super XL, Super XL-AO, XL-12, XL-15

Pitch	Gauge	Chain Type		Drive Links	Bar Length	Drive Teeth	Armor Tip	PowerMatch®	Pro-Lite® MG MP	Pro-Lite® SLG SLH GL GP SP	Pro-Lite® SLB	Pro-Am®	DoubleGuard®
3/8	.050	**AdvanceCut** 72V	**PowerCut** 72EXL, LGX, LPX **VersaCut** 72DPX	059	16	7						160GDDD096	
				060	16	7		*160RNDD196*		*160GLHD196*		160GDDD096	
				064	18	7							
				066	18	7							
				070	20	7		*200GNDD196* 200RNDD196		*200GLHD196*		200GDDD096	
				081	24	7		240RNDD196					
				093	27	7		*270GNDD196*					

Homelite* ▲

400, 410, 450, 460, 540, 550, 650, 700, 750, 800, 825, 850, 900, 922, 923, Super XL 925, V-955, XL 400, XL 700 Series, XL 800 Series, XL 900 Series

Pitch	Gauge	Chain Type		Drive Links	Bar Length	Drive Teeth	Armor Tip	PowerMatch®	Pro-Lite® MG MP	Pro-Lite® SLG SLH GL GP SP	Pro-Lite® SLB	Pro-Am®	DoubleGuard®
3/8	.050	**AdvanceCut** 72V	**PowerCut** 72EXL, LGX, LPX **VersaCut** 72DPX	059	16	8						160GDDD096	
				060	16	7		*160RNDD196*		*160GLHD196*		160GDDD096	
				064	18	8							
				066	18	7							
				070	20	7		*200GNDD196* 200RNDD196		*200GLHD196*		200GDDD096	
				081	24	7		240RNDD196					
				093	27	7		*270GNDD196*					
	.063	**AdvanceCut** 75V	**PowerCut** 75EXL, LGX, LPX **VersaCut** 75DPX	079	21	7	213ATMD196						
				105	32	7							
				117	36	7							
.404	.063		**PowerCut** 59L, 68LX **VersaCut** 27X	106	36	7							

▲ See our guides for chainsaws with a **green triangle** on pages FOR 2–3

▲ See our guides for chainsaws with a **yellow triangle** on pages FOR 2–3

Saw chain complies with low kickback performance requirements (FOR 2–3)

Saw chain does not comply with low kickback performance requirements (FOR 2–3)

For information on our PowerSharp Kits see pages FOR 136–137

For Bar & Chain Combos see pages FOR 100–101

Part numbers printed in *red italics* have been obsoleted. Contact your authorized Oregon distributor for availability.

Guide Bar & Saw Chain Applications

Saw Chain				Guide Bars									
		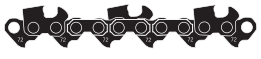				DuraCut™ AT	PowerCut™ RN RW GN PM	SpeedCut™ TXL	VersaCut™ VXL	ControlCut™ PXL	AdvanceCut™ SF SX PX GD MLB	Single Rivet SD DG MLE
Pitch	Gauge	Chain Type	Drive Links	Bar Length	Drive Teeth	Armor Tip	PowerMatch®	Pro-Lite® MG MP	Pro-Lite® SLG SLH GL GP SP	Pro-Lite® SLB	Pro-Am®	DoubleGuard®

Homelite*

C Series, SP 1000, Super 1050, Wiz, Wiz 66, XP 1000, XP 1020, XP 1020 Super, XP 2000, XP 2100, Zip

.404	.063		**PowerCut** 59L, 68LX **VersaCut** 27X	071	21	8	*213AF014*						

Husqvarna

51, 55, 55 Rancher, 57, 254, 254XP, 257, 261, 262, 262XP, 357XP, 357XPG, 359, 359 E-Tech, 455, 455 Rancher, 455e Rancher, 460, 460 Rancher, 543XP, 543XPG, 555, 560XP, 560XPG...

	.050	**ControlCut** 20BPX	**PowerCut** 20LPX	066	16	7	160ATMK095	160RNBK095		*160SLGK095* 160VXLGK095		*160PXBK095*	
				072	18	7	180ATMZ095					180PXBK095	
				072	18	8				*180SLGK095* 180VXLGK095			
				078	20	7	200ATMZ095	200RNBK095		*200SLGK095* 200VXLGK095		200PXBK095	
.325	.058	**ControlCut** 21BPX	**PowerCut** 21LPX	056	13	7					*138SLBK095* 138PXLBK095		
				064	15	8		158RNBK095		158VXLGK095	158PXLBK095		
				066	16	7		168RNBK095		168VXLGK095	*168SLBK095* 168PXLBK095	168SFGK095 168PXBK095	
				072	18	7		188RNBK095		*188SLGK095* 188VXLGK095	188PXLBK095	188SFGK095 188PXBK095	
				078	20	7		208RNBK095		*208SLGK095* 208VXLGK095		208PXBK095 208SFGK095	
	Narrow Kerf												
	.050	*95VPX*	**SpeedCut** 95TXL	056	13	7			*130MPBK095* 130TXLBK095			130MLBK095	
				064	15	7			150TXLBK095			150MLBK095	
				066	16	7			*160MPBK095* 160TXLBK095			160MLBK095	
				072	18	7			180TXLBK095			180MLBK095	
3/8	.050	**AdvanceCut** 72V	**PowerCut** 72EXL, LGX, LPX **VersaCut** 72DPX	060	16	7	160ATMK095	160RNDK095		160VXLHK095		160SFHK095	
				068	18	7	*180ATMK095*	180RNDK095		*180SLHK095* 180VXLHK095		180SFHK095	
				072	20	7	200ATMK095	200RNDK095		200VXLHK095		200SFHK095	
				084	24	7		240RNDK095					
				093	28	7		280RNDK095					

See page FOR 142 for saw chain sharpening tools

* See page FOR 4 for important information on Guard Mate bar-nose tip guards

** See page FOR 4 for important information on Intenz guide bars.

† ANSI B175.1-2012 and CSA Standard Z62.3 regarding reduced kickback does not apply to pole saws or pruners

For the most current fit-up information visit **OregonProducts.com**

Guide Bar & Saw Chain Applications

Saw Chain | **Guide Bars**

Pitch	Gauge	Chain Type	Drive Links	Bar Length	Drive Teeth	DuraCut™ AT Armor Tip	PowerCut™ RN RW GN PM PowerMatch®	SpeedCut™ TXL Pro-Lite® MG MP	VersaCut™ VXL Pro-Lite® SLG SLH GL GP SP	ControlCut™ PXL Pro-Lite® SLB	AdvanceCut™ SF SX PX GD MLB Pro-Am®	Single Rivet SD DG MLE DoubleGuard®

Husqvarna

...51, 55, 55 Rancher, 57, 254, 254XP, 257, 261, 262, 262XP, 357XP, 357XPG, 359, 359 E-Tech, 455, 455 Rancher, 455e Rancher, 460, 460 Rancher, 543XP, 543XPG, 555, 560XP, 560XPG

Pitch	Gauge	Chain Type		Drive Links	Bar Length	Drive Teeth	DuraCut™ AT Armor Tip	PowerCut™ RN RW GN PM PowerMatch®	SpeedCut™ TXL Pro-Lite® MG MP	VersaCut™ VXL Pro-Lite® SLG SLH GL GP SP	ControlCut™ PXL Pro-Lite® SLB	AdvanceCut™ SF SX PX GD MLB Pro-Am®	Single Rivet SD DG MLE DoubleGuard®
3/8	.058	**AdvanceCut** 73V	**PowerCut** 73EXL, LGX, LPX **VersaCut** 73DPX	060	16	7	168ATMK095	168RNDK095		168VXLHK095		168SFHK095	
				064	18	7				*188SLHK095* 188VXLHK095‡			
				068	18	7	188ATMK095	188RNDK095		39450‡		188SFHK095	
				072	20	7	208ATMK095	208RNDK095		208VXLHK095		208SFHK095	
				077	22	7							
				084	24	7		248RNDK095					

‡ Correct fit-up for these Oregon guide bars required that a 6-digit part number be used in addition to the usual 10-digit part number. *188SLHK095* is designed for 3/8" – 64 DL • 39450 is for designed for 3/8" – 68 DL

44, 45, 49, 50, 133, 154, 234, 238, 242, 242XP, 246, 340, 345, 346, 346XP, 346XP E-TECH, 346XPG, 350, 351, 353, 353 E-TECH, 435, 435E, 440E, 444, 445, 445E, 450, 450E, 545, 550XP, 550XPG

Pitch	Gauge	Chain Type		Drive Links	Bar Length	Drive Teeth	DuraCut™ AT Armor Tip	PowerCut™ RN RW GN PM PowerMatch®	SpeedCut™ TXL Pro-Lite® MG MP	VersaCut™ VXL Pro-Lite® SLG SLH GL GP SP	ControlCut™ PXL Pro-Lite® SLB	AdvanceCut™ SF SX PX GD MLB Pro-Am®	Single Rivet SD DG MLE DoubleGuard®
.325	.050	**ControlCut** 20BPX	**PowerCut** 20LPX	066	16	7	*160ATMZ095*	160RNBK095		*160SLGK095* 160VXLGK095		*160PXBK095*	
				072	18	7	*180ATMZ095*					180PXBK095	
						8				*180SLGK095* 180VXLGK095			
				078	20	8	200ATMZ095	200RNBK095		*200SLGK095* 200VXLGK095		200PXBK095	
	.058	**ControlCut** 21BPX	**PowerCut** 21LPX	056	13	7					*138SLBK095* 138PXLBK095		
				064	15	8		158RNBK095		158VXLGK095	158PXLBK095		
				066	16	7		168RNBK095		168VXLGK095	*168SLBK095* 168PXLBK095	168SFGK095 168PXBK095	
				072	18	8		188RNBK095		*188SLGK095* 188VXLGK095	188PXLBK095	188SFGK095 188PXBK095	
				078	20	7		208RNBK095		*208SLGK095* 208VXLGK095		208PXBK095 208SFGK095	
	Narrow Kerf												
	.050	*95VPX*	**SpeedCut** 95TXL	056	13	7			*130MPBK095* 130TXLBK095			130MLBK095	
				064	15	7			150TXLBK095			150MLBK095	
				066	16	7			*160MPBK095* 160TXLBK095			160MLBK095	
				072	18	7			180TXLBK095			180MLBK095	
				078	20	7			200TXLBK095				

See our guides for chainsaws with a **green triangle** on pages FOR 2–3

See our guides for chainsaws with a **yellow triangle** on pages FOR 2–3

Saw chain complies with low kickback performance requirements (FOR 2–3)

Saw chain does not comply with low kickback performance requirements (FOR 2–3)

For information on our PowerSharp Kits see pages FOR 136–137

For Bar & Chain Combos see pages FOR 100–101

Part numbers printed in *red italics* have been obsoleted. Contact your authorized Oregon distributor for availability.

Guide Bar & Saw Chain Applications

Saw Chain				Guide Bars									
						DuraCut™ AT	PowerCut™ RN RW GN PM	SpeedCut™ TXL	VersaCut™ VXL	ControlCut™ PXL	AdvanceCut™ SF SX PX GD MLB	Single Rivet SD DG MLE
Pitch	Gauge	Chain Type	Drive Links	Bar Length	Drive Teeth	Armor Tip	PowerMatch®	Pro-Lite® MG MP	Pro-Lite® SLG SLH GL GP SP	Pro-Lite® SLB	Pro-Am®	DoubleGuard®

Husqvarna

23, 137, 142 — PowerSharp® Compatible

Pitch	Gauge	Chain Type		Drive Links	Bar Length	Drive Teeth	Armor Tip	PowerMatch®	Pro-Lite® MG MP	Pro-Lite® SLG SLH GL GP SP	Pro-Lite® SLB	Pro-Am®	DoubleGuard®
	.050	**ControlCut** 91PXL **AdvanceCut** 91PX	**VersaCut** 91VXL	045	12	6				*120SPEA041*		120SXEA041	120SDEA041
				052	14	6						140SXEA041	140SDEA041
				056	16	6						160SXEA041	160SDEA041
				062	18	6							180SDEA041
	Intenz® **												
3/8 low profile	.050	**ControlCut** 91PXL **AdvanceCut** 91PX	**VersaCut** 91VXL	045	12	6							
				052	14	6				*140SPET041*			140SDET041
				056	16	6				*160SPET041*			160SDET041
				062	18	6							180SDET041
	.043	**AdvanceCut** 90PX		045	12	6							124MLEA041
				052	14	6							144MLEA041
				056	16	6							*164MLEA041*

436 Li, 536 LiXP, T536 LiXP

3/8 low profile	.043	**AdvanceCut** 90PX		040	10	6							
				045	12	6							
				052	14	6							

36, 41, 136, 141, 235, 235E, 236, 240, 240E

	.050	**ControlCut** 91PXL **AdvanceCut** 91PX	**VersaCut** 91VXL	045	12	6				*120SPEA041*		120SXEA041	120SDEA041
				052	14	6						140SXEA041	140SDEA041
				056	16	6						160SXEA041	160SDEA041
				062	18	6							180SDEA041
	Intenz® **												
3/8 low profile	.050	**ControlCut** 91PXL **AdvanceCut** 91PX	**VersaCut** 91VXL	045	12	6							
				052	14	6				*140SPET041*			140SDET041
				056	16	6				*160SPET041*			160SDET041
				062	18	6							180SDET041
	.043	**AdvanceCut** 90PX		045	12	6							124MLEA041
				052	14	6							144MLEA041
				056	16	6							*164MLEA041*
.325	.050	**ControlCut** 20BPX	**PowerCut** 20LPX	066	16	7				*160GLGK041*		160GDBK041	
				072	18	7				*180GLGK041*		180GDBK041	
				078	20	7		*200RNBK041*		*200GLGK041*		200GDBK041	

See page FOR 142 for saw chain sharpening tools

* See page FOR 4 for important information on Guard Mate bar-nose tip guards

** See page FOR 4 for important information on Intenz guide bars.

† ANSI B175.1-2012 and CSA Standard Z62.3 regarding reduced kickback does not apply to pole saws or pruners

For the most current fit-up information visit **OregonProducts.com**

Guide Bar & Saw Chain Applications

Saw Chain | **Guide Bars**

Pitch	Gauge	Chain Type	Drive Links	Bar Length	Drive Teeth	DuraCut™ AT Armor Tip	PowerCut™ RN RW GN PM PowerMatch®	SpeedCut™ TXL MG MP Pro-Lite®	VersaCut™ VXL SLG SLH GL GP SP Pro-Lite®	ControlCut™ PXL SLB Pro-Lite®	AdvanceCut™ SF SX PX GD MLB Pro-Am®	Single Rivet SD DG MLE DoubleGuard®
Husqvarna ▲												
61, 160, 162, 260, 465 Rancher												
3/8	.050	**AdvanceCut** 72V	**PowerCut** 72EXL, LGX, LPX **VersaCut** 72DPX	060	16	8		160RNDD009		160VXLHD009		
				068	18	8	*180ATMD009*	180RNDD009		*180SLHD009* 180VXLHD009		
				072	20	8	200ATMD009	200RNDD009		200VXLHD009	200SFHD009	
				076	22	7						
				084	24	8	240ATMD009	240RNDD009			240SFHD009	
				093	28	7		280RNDD009 280RWDD009				
	.058	**AdvanceCut** 73V	**PowerCut** 73EXL, LGX, LPX **VersaCut** 73DPX	052	13	8		138RNDD009		*138SLHD009*		
				056	15	8				158VXLHD009		
				060	16	7	168ATMD009			168VXLHD009	168SFHD009	
				060	16	8		168RNDD009				
				068	18	8	188ATMD009	188RNDD009		188VXLHD009	188SFHD009	
				072	20	8	208ATMD009	208RNDD009		*208SLHD009* 208VXLHD009	208SFHD009	
				076	22	7		228RNDD009				
				084	24	7	248ATMD009	248RNDD009			248SFHD009	
				092	28	7	288ATMD009	288RNDD009				
	.063	**AdvanceCut** 75V	**PowerCut** 75EXL, LGX, LPX **VersaCut** 75DPX	072	20	7	203ATMD009	203RNDD009				
				084	24	7	243ATMD009	243RNDD009				
316 Electric, 334T, 335, 335XPT, T435, T540, T540XP											**PowerSharp® Compatible**	
3/8	.050	**ControlCut** 91PXL **AdvanceCut** 91PX	**VersaCut** 91VXL	045	12	6				*120SPEA095*	120SXEA095	120SDEA095
				052	14	6				*140SPEA095*	140SXEA095	140SDEA095
				056	16	6				*160SPEA095*	160SXEA095	160SDEA095
	Intenz® **											
3/8 low profile	.050	**ControlCut** 91PXL **AdvanceCut** 91PX	**VersaCut** 91VXL	045	12	6						*120SDET095*
				052	14	6				*140SPET095*		140SDET095
				056	16	6						*160SDET095*
	Narrow Kerf											
	.043	**AdvanceCut** 90PX		052	14	6						*144MLEA095*

▲ See our guides for chainsaws with a **green triangle** on pages FOR 2–3

▲ See our guides for chainsaws with a **yellow triangle** on pages FOR 2–3

Saw chain complies with low kickback performance requirements (FOR 2–3)

Saw chain does not comply with low kickback performance requirements (FOR 2–3)

For information on our PowerSharp Kits see pages FOR 136–137

For Bar & Chain Combos see pages FOR 100–101

Part numbers printed in *red italics* have been obsoleted. Contact your authorized Oregon distributor for availability.

Guide Bar & Saw Chain Applications

Saw Chain				Guide Bars										
							DuraCut™ AT	PowerCut™ RN RW GN PM	SpeedCut™ TXL	VersaCut™ VXL	ControlCut™ PXL	AdvanceCut™ SF SX PX GD MLB	Single Rivet SD DG MLE
Pitch	Gauge	Chain Type	Drive Links	Bar Length	Drive Teeth	Armor Tip	PowerMatch®	Pro-Lite® MG MP	Pro-Lite® SLG SLH GL GP SP	Pro-Lite® SLB	Pro-Am®	DoubleGuard®
Husqvarna													
338XPT, 339XP, 336													
	.050	**ControlCut** 91PXL **AdvanceCut** 91PX / **VersaCut** 91VXL	045	12	6				*120SPEA095*		120SXEA095	120SDEA095
			052	14	6				*140SPEA095*		140SXEA095	140SDEA095
			056	16	6				*160SPEA095*		160SXEA095	160SDEA095
	Intenz® **												
3/8 low profile	.050	**ControlCut** 91PXL **AdvanceCut** 91PX / **VersaCut** 91VXL	045	12	6							*120SDET095*
			052	14	6				*140SPET095*			140SDET095
			056	16	6							*160SDET095*
	.043	**AdvanceCut** 90PX	052	14	6							*144MLEA095*
338XPT, 339XP, 336													
	.050	**ControlCut** 20BPX / **PowerCut** 20LPX	066	16	7	*160ATMZ095*	160RNBK095		*160SLGK095* 160VXLGK095		*160PXBK095*	
			072	18	7	*180ATMZ095*					180PXBK095	
			072	18	8				*180SLGK095* 180VXLGK095			
			078	20	7	200ATMZ095	200RNBK095		*200SLGK095* 200VXLGK095		200PXBK095	
.325	.058	**ControlCut** 21BPX / **PowerCut** 21LPX	056	13	7					*138SLBK095* 138PXLBK095		
			064	15	8		158RNBK095		158VXLGK095	158PXLBK095		
			066	16	7		168RNBK095		168VXLGK095	*168SLBK095* 168PXLBK095	168SFGK095 168PXBK095	
			072	18	8		188RNBK095		*188SLGK095* 188VXLGK095	188PXLBK095	188SFGK095 188PXBK095	
			078	20	7		208RNBK095		*208SLGK095* 208VXLGK095		208PXBK095 208SFGK095	
	Narrow Kerf												
	.050	*95VPX* / **SpeedCut** 95TXL	056	13	7			*130MPBK095* 130TXLBK095			130MLBK095	
			064	15	7			150TXLBK095			150MLBK095	
			066	16	7			*160MPBK095* 160TXLBK095			160MLBK095	
			072	18	7			180TXLBK095			180MLBK095	
Pole Pruner†: 128LDX, 325P4, 325P5X, 326P4, 326P5X, 327P4, 327P4X, 327P5X, 525P4S, 525P5S													
	.043	**AdvanceCut** 90PX	040	10	6							
			045	12	6							
3/8 low profile	.050	**ControlCut** 91PXL **AdvanceCut** 91PX / **VersaCut** 91VXL	040	10	6							
			045	12	6				*120SPEA095*		120SXEA095	120SDEA095

See page FOR 142 for saw chain sharpening tools

* See page FOR 4 for important information on Guard Mate bar-nose tip guards

** See page FOR 4 for important information on Intenz guide bars.

† ANSI B175.1-2012 and CSA Standard Z62.3 regarding reduced kickback does not apply to pole saws or pruners

For the most current fit-up information visit **OregonProducts.com**

Guide Bar & Saw Chain Applications

Saw Chain				Guide Bars									
						DuraCut™ AT	PowerCut™ RN RW GN PM	SpeedCut™ TXL	VersaCut™ VXL	ControlCut™ PXL	AdvanceCut™ SF SX PX GD MLB	Single Rivet SD DG MLE
Pitch	Gauge	Chain Type	Drive Links	Bar Length	Drive Teeth	Armor Tip	PowerMatch®	Pro-Lite® MG MP	Pro-Lite® SLG SLH GL GP SP	Pro-Lite® SLB	Pro-Am®	DoubleGuard®

Husqvarna

362, 362XP

Pitch	Gauge	Chain Type		Drive Links	Bar Length	Drive Teeth	Armor Tip	PowerMatch®	Pro-Lite® MG MP	Pro-Lite® SLG SLH GL GP SP	Pro-Lite® SLB	Pro-Am®	DoubleGuard®
.325	.050	**ControlCut** 20BPX	**PowerCut** 20LPX	066	16	7	*160ATMZ095*	160RNBK095		*160SLGK095* 160VXLGK095		*160PXBK095*	
				072	18	7	*180ATMZ095*					180PXBK095	
				072	18	8				*180SLGK095* 180VXLGK095			
				078	20	7	200ATMZ095	200RNBK095		*200SLGK095* 200VXLGK095		200PXBK095	
	.058	**ControlCut** 21BPX	**PowerCut** 21LPX	056	13	7					*138SLBK095* 138PXLBK095		
				064	15	8		158RNBK095		158VXLGK095	158PXLBK095		
				066	16	7		168RNBK095		168VXLGK095	*168SLBK095* 168PXLBK095	16VXLGK095 168PXBK095	
				072	18	8		188RNBK095		*188SLGK095* 188VXLGK095	188PXLBK095	188VXLGK095 188PXBK095	
				078	20	7		208RNBK095		*208SLGK095* 208VXLGK095		208PXBK095	
	Narrow Kerf												
	.050	*95VPX*	**SpeedCut** 95TXL	056	13	7			*130MPBK095* 130TXLBK095			130MLBK095	
				064	15	7			150TXLBK095			150MLBK095	
				066	16	7			*160MPBK095* 160TXLBK095			160MLBK095	
				072	18	7			180TXLBK095			180MLBK095	
3/8	.050	**AdvanceCut** 72V	**PowerCut** 72EXL, LGX, LPX **VersaCut** 72DPX	060	16	7	160ATMK095	160RNDK095		160VXLHK095		160SFHK095	
				068	18	7	180ATMK095	180RNDK095		*180SLHK095* 180VXLHK095		180SFHK095	
				072	20	7	200ATMK095	200RNDK095		200VXLHK095		200SFHK095	
				084	24	7		240RNDK095					
				093	28	7		280RNDK095					
	.058	**AdvanceCut** 73V	**PowerCut** 73EXL, LGX, LPX **VersaCut** 73DPX	060	16	7	168ATMK095	168RNDK095		168VXLHK095		168SFHK095	
				064	18	7				*188SLHK095* 188VXLHK095‡			
				068	18	7	188ATMK095	188RNDK095		39450‡		188SFHK095	
				072	20	7	208ATMK095	208RNDK095		208VXLHK095		208SFHK095	
				076	22	7							
				084	24	7		248RNDK095					
				093	28	7							

‡ Correct fit-up for these Oregon guide bars required that a 6-digit part number be used in addition to the usual 10-digit part number. *188SLHK095* is designed for 3/8" – 64 DL • 39450 is for designed for 3/8" – 68 DL

See our guides for chainsaws with a **green triangle** on pages FOR 2–3

See our guides for chainsaws with a **yellow triangle** on pages FOR 2–3

Saw chain complies with low kickback performance requirements (FOR 2–3)

Saw chain does not comply with low kickback performance requirements (FOR 2–3)

For information on our PowerSharp Kits see pages FOR 136–137

For Bar & Chain Combos see pages FOR 100–101

Part numbers printed in *red italics* have been obsoleted. Contact your authorized Oregon distributor for availability.

Guide Bar & Saw Chain Applications

Saw Chain						Guide Bars						
						DuraCut™ AT	PowerCut™ RN RW GN PM	SpeedCut™ TXL	VersaCut™ VXL	ControlCut™ PXL	AdvanceCut™ SF SX PX GD MLB	Single Rivet SD DG MLE
Pitch	Gauge	Chain Type	Drive Links	Bar Length	Drive Teeth	Armor Tip	PowerMatch®	Pro-Lite® MG MP	Pro-Lite® SLG SLH GL GP SP	Pro-Lite® SLB	Pro-Am®	DoubleGuard®

Husqvarna

L Series: 65, 66, 70, 77; 181, 185, 266, 268, 272, 281, 285, 288, 288XP Lite, 298, 365, 371, 372, 372XP, 372XPG, 372XPW, 380, 385, 385XP, 385XPG, 385XPW, 390XP, 390XPG, 390XPW, 394, 394XP, 395, 395XP, 395XPG, 395XPW, 480, 562XP, 562XPG, 570, 575XP, 575XPG, 575XPW, 576XP, 576XP Auto Tune, 576xpg, 576xpw, 1100, 2100, 2101, 3120, 3120XP, Jungle 3120...

Pitch	Gauge	Chain Type		Drive Links	Bar Length	Drive Teeth	Armor Tip	PowerMatch®	Pro-Lite® MG MP	Pro-Lite® SLG SLH GL GP SP	Pro-Lite® SLB	Pro-Am®	DoubleGuard®
3/8	.050	**AdvanceCut** 72V	**PowerCut** 72EXL, LGX, LPX **VersaCut** 72DPX	060	16	8		160RNDD009		160VXLHD009			
				068	18	8	180ATMD009	180RNDD009		*180SLHD009* 180VXLHD009			
				072	20	8	200ATMD009	200RNDD009		200VXLHD009		200SFHD009	
				076	22	7							
				084	24	8	240ATMD009	240RNDD009				240SFHD009	
				093	28	7		280RNDD009					
				093	28	7		280RWDD009					
				098	30	7		300RNDD009					
				105	32	7		320RNDD009					
				105	32	7		320RWDD009					
	.058	**AdvanceCut** 73V	**PowerCut** 73EXL, LGX, LPX **VersaCut** 73DPX	052	13	8		138RNDD009		*138SLHD009*			
				056	15	8				158VXLHD009			
				060	16	8	168ATMD009	168RNDD009		168VXLHD009		168SFHD009	
				068	18	8	188ATMD009	188RNDD009		188VXLHD009		188SFHD009	
				072	20	8	208ATMD009	208RNDD009		*208SLHD009* 208VXLHD009		208SFHD009	
				076	22	7		228RNDD009					
				084	24	7	248ATMD009	248RNDD009				248SFHD009	
				089	26	8		268RNDD009					
				092	28	7	288ATMD009	288RNDD009					
				102	30	8		308RNDD009					
				105	32	8		*328RNDD009*					
				110	33	7		338RWDD009					
						8		338PMDD009					
				115	36	7		*368RNDD009*					
				119	37	7		378RWDD009					
								378PMDD009					

See page FOR 142 for saw chain sharpening tools

* See page FOR 4 for important information on Guard Mate bar-nose tip guards

** See page FOR 4 for important information on Intenz guide bars.

† ANSI B175.1-2012 and CSA Standard Z62.3 regarding reduced kickback does not apply to pole saws or pruners

For the most current fit-up information visit **OregonProducts.com**

Guide Bar & Saw Chain Applications

Saw Chain | **Guide Bars**

Pitch	Gauge	Chain Type	Drive Links	Bar Length	Drive Teeth	DuraCut™ AT Armor Tip	PowerCut™ RN RW GN PM PowerMatch®	SpeedCut™ TXL MG MP Pro-Lite®	VersaCut™ VXL SLG SLH GL GP SP Pro-Lite®	ControlCut™ PXL SLB Pro-Lite®	AdvanceCut™ SF SX PX GD MLB Pro-Am®	Single Rivet SD DG MLE DoubleGuard®
Husqvarna ▲												
...L Series: 65, 66, 70, 77; 181, 185, 266, 268, 272, 281, 285, 288, 288XP Lite, 298, 365, 371, 372, 372XP, 372XPG, 372XPW, 380, 385, 385XP, 385XPG, 385XPW, 390XP, 390XPG, 390XPW, 394, 394XP, 395, 395XP, 395XPG, 395XPW, 480, 562XP, 562XPG, 570, 575XP, 575XPG, 575XPW, 576XP, 576XP Auto Tune, 576xpg, 576xpw, 1100, 2100, 2101, 3120, 3120XP, Jungle 3120												
3/8	.063	**AdvanceCut** 75V	**PowerCut** 75EXL, LGX, LPX **VersaCut** 75DPX	072	20	7	203ATMD009	203RNDD009				
				084	24	7	243ATMD009	243RNDD009				
				093	28	7		283RNDD009 283RWDD009				
				098	30	7						
				105	32	7		323RNDD009 323RWDD009				
				110	34	7		343RNDD009				
				115	36	7		363RNDD009 363RWDD009				
				119	37	7						
				135	42	7		423RNDD009				
.404	.058		**PowerCut** *58L*	100	33	7						
	.063		**PowerCut** 59L, 68LX **VersaCut** 27X	065	20	7						
				092	30	7						
				095	32	7						
				104	36	7		363RNFD009				
John Deere ▲												
25EV, 28, 28V, 30, 30V, 35, 35EV, 40V, 200CS, 230CS, CS36, CS36LE, CS40, CS40LE, CS40V, J3816											PowerSharp® Compatible	
3/8 low profile	.050	**ControlCut** 91PXL **AdvanceCut** 91PX	**VersaCut** 91VXL	045	12	6				*120GPEA041*		120DGEA041
				052	14	6						140DGEA041
				056	16	6				*160GPEA041*		160DGEA041
				062	18	6						180DGEA041
	Intenz® **											
	.050	**ControlCut** 91PXL **AdvanceCut** 91PX	**VersaCut** 91VXL	045	12	6						120DGET041
				052	14	6						140DGET041
				056	16	6				*160GPET041*		160DGET041
	.043	**AdvanceCut** 90PX		040	10	6						
				045	12	6						124MLEA041
				052	14	6						144MLEA041
				056	16	6						*164MLEA041*

▲ See our guides for chainsaws with a **green triangle** on pages FOR 2–3

▲ See our guides for chainsaws with a **yellow triangle** on pages FOR 2–3

Saw chain complies with low kickback performance requirements (FOR 2–3)

Saw chain does not comply with low kickback performance requirements (FOR 2–3)

For information on our PowerSharp Kits see pages FOR 136–137

For Bar & Chain Combos see pages FOR 100–101

Part numbers printed in *red italics* have been obsoleted. Contact your authorized Oregon distributor for availability.

Guide Bar & Saw Chain Applications

Saw Chain				Guide Bars									
						DuraCut™ AT	PowerCut™ RN RW GN PM	SpeedCut™ TXL	VersaCut™ VXL	ControlCut™ PXL	AdvanceCut™ SF SX PX GD MLB	Single Rivet SD DG MLE
Pitch	Gauge	Chain Type	Drive Links	Bar Length	Drive Teeth	Armor Tip	PowerMatch®	Pro-Lite® MG MP	Pro-Lite® SLG SLH GL GP SP	Pro-Lite® SLB	Pro-Am®	DoubleGuard®
John Deere												
Pruner Models†, Quick-Tatch Series: PS2393, PS2683, PSA10												
3/8 low profile	.050	**AdvanceCut** 90PX	040	10	6							
45EV, 46EV, 300CS, 450V												
.325	.050	**ControlCut** 20BPX	059	14	7							
			066	16	7				*160GLGK041*		160GDBK041	
		PowerCut 20LPX	072	18	7				*180GLGK041*		180GDBK041	
			078	20	7		*200RNBK041*		*200GLGK041*		200GDBK041	
CS46, CS52												
.325	.050	**ControlCut** 20BPX	066	16	7	*160ATMZ095*	160RNBK095		*160SLGK095* 160VXLGK095		*160PXBK095*	
			072	18	7	*180ATMZ095*					180PXBK095	
		PowerCut 20LPX	072	18	8				*180SLGK095* 180VXLGK095			
	Narrow Kerf											
	.050	*95VPX*	066	16	7			*160MPBK095* 160TXLBK095			160MLBK095	
		SpeedCut 95TXL	072	18	7			180TXLBK095			180MLBK095	
50AV, 50V, 51SV, 55EV, 55SV, 55V, 60V												
3/8	.050	**AdvanceCut** 72V	060	16	7		160RNDD176		*160GLHD176*			
			064	18	7				180VXLHD176			
		PowerCut 72EXL, LGX, LPX **VersaCut** 72DPX	066	18	7		180RNDD176					
			070	20	7	200ATMD176	200RNDD176		*200GLHD176*		200GDDD176	
			081	24	7		240RNDD176					
			084		7	240ATMD176						
			093	27	7		*270GNDD176*					
CS56, CS62...												
.325	.050	**ControlCut** 20BPX	066	16	7	*160ATMZ095*	160RNBK095		*160SLGK095* 160VXLGK095		*160PXBK095*	
			067	18	7							
		PowerCut 20LPX	072	18	7	*180ATMZ095*					180PXBK095	
			072	18	8				*180SLGK095* 180VXLGK095			
			078	20	7	200ATMZ095	200RNBK095		*200SLGK095* 200VXLGK095		200PXBK095	
	Narrow Kerf											
	.050	*95VPX*	066	16	7			*160MPBK095* 160TXLBK095			160MLBK095	
		SpeedCut 95TXL	072	18	7			180TXLBK095			180MLBK095	
			078	20	7			200TXLBK095				

See page FOR 142 for saw chain sharpening tools

* See page FOR 4 for important information on Guard Mate bar-nose tip guards

** See page FOR 4 for important information on Intenz guide bars.

† ANSI B175.1-2012 and CSA Standard Z62.3 regarding reduced kickback does not apply to pole saws or pruners

For the most current fit-up information visit **OregonProducts.com**

Guide Bar & Saw Chain Applications

Saw Chain				Guide Bars									
						DuraCut™ AT	PowerCut™ RN RW GN PM	SpeedCut™ TXL	VersaCut™ VXL	ControlCut™ PXL	AdvanceCut™ SF SX PX GD MLB	Single Rivet SD DG MLE
Pitch	Gauge	Chain Type	Drive Links	Bar Length	Drive Teeth	Armor Tip	PowerMatch®	Pro-Lite® MG MP	Pro-Lite® SLG SLH GL GP SP	Pro-Lite® SLB	Pro-Am®	DoubleGuard®

John Deere

...CS56, CS62

Pitch	Gauge	Chain Type		Drive Links	Bar Length	Drive Teeth	Armor Tip	PowerMatch®	Pro-Lite® MG MP	Pro-Lite® SLG SLH GL GP SP	Pro-Lite® SLB	Pro-Am®	DoubleGuard®
3/8	.050	**AdvanceCut** 72V	**PowerCut** 72EXL, LGX, LPX **VersaCut** 72DPX	060	16	7	*160ATMZ095*	160RNDK095		160VXLHK095		160SFHK095	
				064	18	7	*180ATMZ095*						
				070	20	7	200ATMZ095						
				072	20	7	200ATMK095	200RNDK095		200VXLHK095		200SFHK095	
				084	24	7		240RNDK095					

John Deere

65, 65EV, 65SV, 66SV, 70V, 80EV, 800V

3/8	.050	**AdvanceCut** 72V	**PowerCut** 72EXL, LGX, LPX **VersaCut** 72DPX	060	16	7	*160ATMD176*	160RNDD176		*160GLHD176*			
				064	18	7				180VXLHD176			
				066	18	7		180RNDD176					
				070	20	7	200ATMD176	200RNDD176		*200GLHD176*		200GDDD176	
				081	24	7		240RNDD176					
				093	27	7							

CS71, CS81 Note: D196 bar tail slot must be filed .020" for proper fit-up.

3/8	.050	**AdvanceCut** 72V	**PowerCut** 72EXL, LGX, LPX **VersaCut** 72DPX	060	16	7		*160RNDD196*				160GDDD096	
				064	18	8							
				066	18	7							
				067	18	7							
				070	20	7		200RNDD196		*200GLHD196*		200GDDD096	
				072	20	7							
				081	24	7		240RNDD196					
				083	24	7							
				093	27	7		270RNDD196					
				094	28	7							
	.063	**AdvanceCut** 75V	**PowerCut** 75EXL, LGX, LPX **VersaCut** 75DPX	072	21	7	213ATMD196						

See our guides for chainsaws with a **green triangle** on pages FOR 2–3

See our guides for chainsaws with a **yellow triangle** on pages FOR 2–3

Saw chain complies with low kickback performance requirements (FOR 2–3)

Saw chain does not comply with low kickback performance requirements (FOR 2–3)

For information on our PowerSharp Kits see pages FOR 136–137

For Bar & Chain Combos see pages FOR 100–101

Part numbers printed in *red italics* have been obsoleted. Contact your authorized Oregon distributor for availability.

Guide Bar & Saw Chain Applications

Saw Chain				Guide Bars									
						DuraCut™ AT	PowerCut™ RN RW GN PM	SpeedCut™ TXL	VersaCut™ VXL	ControlCut™ PXL	AdvanceCut™ SF SX PX GD MLB	Single Rivet SD DG MLE
Pitch	Gauge	Chain Type	Drive Links	Bar Length	Drive Teeth	Armor Tip	PowerMatch®	Pro-Lite® MG MP	Pro-Lite® SLG SLH GL GP SP	Pro-Lite® SLB	Pro-Am®	DoubleGuard®

Jonsered

2014, 2016, 2035, 2036, 2036 Turbo, 2040, 2040 Turbo, 2137, 2138, CS2135, CS2137, CS2138, CS2234, CS2238S; Some saws may take .325" pitch chain, see other applications. — PowerSharp® Compatible

Pitch	Gauge	Chain Type		Drive Links	Bar Length	Drive Teeth	Armor Tip	PowerMatch®	Pro-Lite® MG MP	Pro-Lite® SLG SLH GL GP SP	Pro-Lite® SLB	Pro-Am®	DoubleGuard®
	.050	ControlCut 91PXL AdvanceCut 91PX	VersaCut 91VXL	045	12	6				*120SPEA041*		120SXEA041	120SDEA041
				052	14	6						140SXEA041	140SDEA041
				056	16	6						160SXEA041	160SDEA041
	Intenz® **												
3/8 low profile	.050	ControlCut 91PXL AdvanceCut 91PX	VersaCut 91VXL	045	12	6							
				052	14	6				*140SPET041*			140SDET041
				056	16	6				*160SPET041*			160SDET041
	.043	AdvanceCut 90PX		045	12	6							124MLEA041
				052	14	6							144MLEA041
				056	16	6							*164MLEA041*
36, 361, 365													
3/8 low profile	.050	ControlCut 91PXL AdvanceCut 91PX	VersaCut 91VXL	045	12	6							
				052	14	6							*140SDEA064*
				056	16	6							
2116E													
3/8 low profile	.050	ControlCut 91PXL AdvanceCut 91PX	VersaCut 91VXL	056	16	6							
45, 49, 50, 51, 52, 370, 410, 420, 425, 435, 450, 451, 455, 510, 521, 525, 535, 2050, 2050 Turbo, 2051, 2054, 2055, 2149, 2149 Turbo, CS2145, CS2149 Turbo, CS2150, CS2152 W, CS2153, CS2156, CS2159, CS2159C, CS2159WH, CS2163, CS2234, CS2238S, CS2240, CS2245, CS2250, CS2250S, CS2252, CS2253, CS2253WH, CS2255, CS2258, CS2260, CS2260WH; Some saws may take 3/8" pitch chain, see other applications...													
	.050	ControlCut 20BPX	PowerCut 20LPX	066	16	7	*160ATMZ095*	160RNBK095		*160SLGK095* 160VXLGK095		*160PXBK095*	
				072	18	7	*180ATMZ095*					180PXBK095	
				072	18	8				*180SLGK095* 180VXLGK095			
				078	20	8	200ATMZ095	200RNBK095		*200SLGK095* 200VXLGK095		200PXBK095	
.325	.058	ControlCut 21BPX	PowerCut 21LPX	056	13	7					*138SLBK095* 138PXLBK095		
				064	15	8		158RNBK095		158VXLGK095	158PXLBK095		
				066	16	7		168RNBK095		168VXLGK095	*168SLBK095* 168PXLBK095	168SFGK095 168PXBK095	
				072	18	8		188RNBK095		*188SLGK095* 188VXLGK095	188PXLBK095	188SFGK095 188PXBK095	
				078	20	7		208RNBK095		*208SLGK095* 208VXLGK095		208PXBK095 208SFGK095	

See page FOR 142 for saw chain sharpening tools

* See page FOR 4 for important information on Guard Mate bar-nose tip guards

** See page FOR 4 for important information on Intenz guide bars.

† ANSI B175.1-2012 and CSA Standard Z62.3 regarding reduced kickback does not apply to pole saws or pruners

For the most current fit-up information visit **OregonProducts.com**

Guide Bar & Saw Chain Applications

Saw Chain | **Guide Bars**

Pitch	Gauge	Chain Type	Drive Links	Bar Length	Drive Teeth	DuraCut™ AT Armor Tip	PowerCut™ RN RW GN PM PowerMatch®	SpeedCut™ TXL MG MP Pro-Lite®	VersaCut™ VXL SLG SLH GL GP SP Pro-Lite®	ControlCut™ PXL SLB Pro-Lite®	AdvanceCut™ SF SX PX GD MLB Pro-Am®	Single Rivet SD DG MLE DoubleGuard®

Jonsered ▲

...45, 49, 50, 51, 52, 370, 410, 420, 425, 435, 450, 451, 455, 510, 521, 525, 535, 2050, 2050 Turbo, 2051, 2054, 2055, 2149, 2149 Turbo, CS2145, CS2149 Turbo, CS2150, CS2152 W, CS2153, CS2156, CS2159, CS2159C, CS2159WH, CS2163, CS2234, CS2238S, CS2240, CS2245, CS2250, CS2250S, CS2252, CS2253, CS2253WH, CS2255, CS2258, CS2260, CS2260WH;Some saws may take 3/8" pitch chain, see other applications.

Narrow Kerf

Pitch	Gauge	Chain Type	Chain Type	Drive Links	Bar Length	Drive Teeth	Armor Tip	PowerMatch®	SpeedCut™ TXL MG MP Pro-Lite®	VersaCut™ VXL SLG SLH GL GP SP Pro-Lite®	ControlCut™ PXL SLB Pro-Lite®	AdvanceCut™ SF SX PX GD MLB Pro-Am®	Single Rivet SD DG MLE DoubleGuard®
.325	.050	*95VPX*	**SpeedCut** 95TXL	056	13	7			*130MPBK095* 130TXLBK095			130MLBK095	
				064	15	7			150TXLBK095			150MLBK095	
				066	16	7			*160MPBK095* 160TXLBK095			160MLBK095	
				072	18	7			180TXLBK095			180MLBK095	
				078	20	7			200TXLBK095				

490, 520SP, 525, 535, 590, 2051, 2054, 2055, 2063, 2163, CS2050, CS2050 Turbo, CS2149, CS2156, CS2159, CS2159 C, CS2159 CWH, CS2159 WH, CS2163, CS2163 WH, CS2238S, CS2255, CS2258, CS2260, CS2260 WH; Some saws may take .325" pitch chain, see other applications.

Pitch	Gauge	Chain Type	Chain Type	Drive Links	Bar Length	Drive Teeth	Armor Tip	PowerMatch®	SpeedCut™ TXL MG MP Pro-Lite®	VersaCut™ VXL SLG SLH GL GP SP Pro-Lite®	ControlCut™ PXL SLB Pro-Lite®	AdvanceCut™ SF SX PX GD MLB Pro-Am®	Single Rivet SD DG MLE DoubleGuard®
	.050	**AdvanceCut** 72V	**PowerCut** 72EXL, LGX, LPX **VersaCut** 72DPX	059	16	7	*160ATMZ095*					160PXDK095	
				060	16	7	*160ATMK095*	160RNDK095		160VXLHK095		160SFHK095	
				064	18	7	*180ATMZ095*						
				070	20	7	200ATMZ095						
				072	20	7	200ATMK095	200RNDK095		200VXLHK095		200SFHK095	
				081	23	7							
				084	24	7		240RNDK095					
3/8													
	.058	**AdvanceCut** 73V	**PowerCut** 73EXL, LGX, LPX **VersaCut** 73DPX	059	16	7							
				060	16	7	168ATMK095	168RNDK095		168VXLHK095		168SFHK095	
				064	18	7		188RNDZ095		‡*188SLHK095* 188VXLHK095			
				068	18	7	188ATMK095	188RNDK095		‡39450		188SFHK095	
				072	20	7	208ATMK095	208RNDK095		208VXLHK095		208SFHK095	
				084	24	7		248RNDK095					
				093	28	7							

‡ Correct fit-up for these Oregon guide bars required that a 6-digit part number be used in addition to the usual 10-digit part number. *188SLHK095* is designed for 3/8" – 64 DL • 39450 is for designed for 3/8" – 68 DL

▲ See our guides for chainsaws with a **green triangle** on pages FOR 2–3

▲ See our guides for chainsaws with a **yellow triangle** on pages FOR 2–3

Saw chain complies with low kickback performance requirements (FOR 2–3)

Saw chain does not comply with low kickback performance requirements (FOR 2–3)

For information on our PowerSharp Kits see pages FOR 136–137

For Bar & Chain Combos see pages FOR 100–101

Part numbers printed in *red italics* have been obsoleted. Contact your authorized Oregon distributor for availability.

Guide Bar & Saw Chain Applications

Saw Chain				Guide Bars									
						DuraCut™ AT	PowerCut™ RN RW GN PM	SpeedCut™ TXL	VersaCut™ VXL	ControlCut™ PXL	AdvanceCut™ SF SX PX GD MLB	Single Rivet SD DG MLE
Pitch	Gauge	Chain Type	Drive Links	Bar Length	Drive Teeth	Armor Tip	PowerMatch®	Pro-Lite® MG MP	Pro-Lite® SLG SLH GL GP SP	Pro-Lite® SLB	Pro-Am®	DoubleGuard®

Jonsered

2014, 2016, 2036, 2036 Turbo, 2040, 2040 Turbo, 2041, 2045, 2141, CS 2141; Some saws may take 3/8" pitch chain, see other applications.

Pitch	Gauge			Drive Links	Bar Length	Drive Teeth	Armor Tip	PowerMatch®	Pro-Lite® MG MP	Pro-Lite® SLG SLH GL GP SP	Pro-Lite® SLB	Pro-Am®	DoubleGuard®
.325	.050	**ControlCut** 20BPX	**PowerCut** 20LPX	066	16	7		160RNBK041		*160GLGK041*		160PXBK041	
				072	18	7		180RNBK041		180VXLGK041 *180GLGK041*		180PXBK041	
				078	20	8		*200RNBK041*				200PXBK041	
	.058	**ControlCut** 21BPX	**PowerCut** 21LPX	064	15	8				*158SLGK041* 158VXLGK041			
				064	15	7					158PXLBK041		
				066	16	7				168VXLGK041			
				072	18	7				188VXLGK041			
	Intenz® **												
	.050	**ControlCut** 20BPX	**PowerCut** 20LPX	066	16	7							
				072	18	7						*180PXBT041*	
				078	20	8						200PXBT041	
	Narrow Kerf												
	.050	*95VPX*	**SpeedCut** 95TXL	056	13	7						130MLBK041	
				064	15	7						150MLBK041	
				066	16	7			160TXLGK041			160MLBK041	
				072	18	7			180TXLGK041			180MLBK041	

Jonsered

625, 630, 630 Super, 630 West Coast, 2065, 2071, 2077, 2165, 2171, CS 2165, CS 2166, CS 2171, CS 2171 WH, CS 2172, CS 2172 WH, CS 2186, CS 2186 WH, CS 2188...

Pitch	Gauge			Drive Links	Bar Length	Drive Teeth	Armor Tip	PowerMatch®	Pro-Lite® MG MP	Pro-Lite® SLG SLH GL GP SP	Pro-Lite® SLB	Pro-Am®	DoubleGuard®
3/8	.050	**AdvanceCut** 72V	**PowerCut** 72EXL, LGX, LPX **VersaCut** 72DPX	060	16	8		160RNDD009		160VXLHD009			
				068	18	8	*180ATMD009*	180RNDD009		*180SLHD009* 180VXLHD009			
				072	20	8	200ATMD009	200RNDD009		200VXLHD009		200SFHD009	
				076	22	7							
				084	24	8	240ATMD009	240RNDD009				240SFHD009	
				093	28	7		280RNDD009 280RWDD009					
	.058	**AdvanceCut** 73V	**PowerCut** 73EXL, LGX, LPX **VersaCut** 73DPX	052	13	8		138RNDD009		*138SLHD009*			
				056	15	8				158VXLHD009			
				060	16	8	168ATMD009	168RNDD009		168VXLHD009		168SFHD009	

See page FOR 142 for saw chain sharpening tools

* See page FOR 4 for important information on Guard Mate bar-nose tip guards

** See page FOR 4 for important information on Intenz guide bars.

† ANSI B175.1-2012 and CSA Standard Z62.3 regarding reduced kickback does not apply to pole saws or pruners

For the most current fit-up information visit **OregonProducts.com**

Guide Bar & Saw Chain Applications

Saw Chain | **Guide Bars**

Pitch	Gauge	Chain Type	Drive Links	Bar Length	Drive Teeth	DuraCut™ AT Armor Tip	PowerCut™ RN RW GN PM PowerMatch®	SpeedCut™ TXL MG MP Pro-Lite®	VersaCut™ VXL SLG SLH GL GP SP Pro-Lite®	ControlCut™ PXL SLB Pro-Lite®	AdvanceCut™ SF SX PX GD MLB Pro-Am®	Single Rivet SD DG MLE DoubleGuard®
Jonsered ▲												
...625, 630, 630 Super, 630 West Coast, 2065, 2071, 2077, 2165, 2171, CS 2165, CS 2166, CS 2171, CS 2171 WH, CS 2172, CS 2172 WH, CS 2186, CS 2186 WH, CS 2188												
3/8	.058	**AdvanceCut** 73V	068	18	8	188ATMD009	188RNDD009		188VXLHD009		188SFHD009	
		PowerCut 73EXL, LGX, LPX **VersaCut** 73DPX	072	20	8	208ATMD009	208RNDD009		*208SLHD009* 208VXLHD009		208SFHD009	
			076	22	7		228RNDD009					
			084	24	7	248ATMD009	248RNDD009				248SFHD009	
			089	26	8		268RNDD009					
			092	28	7	288ATMD009	288RNDD009					
			102	30	8		308RNDD009					
			105	32	8		*328RNDD009*					
			115	36	7		*368RNDD009*					
			119	37	7		378PMDD009					
60, 61, 62, 621, 2350												
3/8	.050	**AdvanceCut** 72V	060	16	7		*160RNDD196*		*160GLHD196*		160GDDD096	
		PowerCut 72EXL, LGX, LPX **VersaCut** 72DPX	064	18	8							
			066	18	7							
			070	20	7		*200GNDD196* 200RNDD196		*200GLHD196*		200GDDD096	
			081	24	7		240RNDD196					
			093	27	7		*270GNDD196*					
3/8	.058	**AdvanceCut** 73V	060	16	8				*168SLHD196*			
		PowerCut 73EXL, LGX, LPX **VersaCut** 73DPX	068	18	8							
			072	20	8		208RNDD024		208VXLHD024			
	.063	**AdvanceCut** 75V	079	21	7	213ATMD196						
		PowerCut 75EXL, LGX, LPX **VersaCut** 75DPX										
Ripping Mill												
.325	.050		095	24	7							
66, 70, 75, 77, 80, 81, 90, 110, 111, 601, 751, 801, 820, 830, 910, 920, 930, 939, 941, 1020; Some saws may take .404" pitch chain, see other applications...												
3/8	.050	**AdvanceCut** 72V	060	16	7		*160RNDD196*		*160GLHD196*		160GDDD096	
		PowerCut 72EXL, LGX, LPX **VersaCut** 72DPX	064	18	8							
			066	18	7							
			070	20	7		*200GNDD196* 200RNDD196		*200GLHD196*		200GDDD096	
			081	24	7		240RNDD196					
			093	27	7		*270GNDD196*					

▲ See our guides for chainsaws with a **green triangle** on pages FOR 2–3

▲ See our guides for chainsaws with a **yellow triangle** on pages FOR 2–3

Saw chain complies with low kickback performance requirements (FOR 2–3)

Saw chain does not comply with low kickback performance requirements (FOR 2–3)

For information on our PowerSharp Kits see pages FOR 136–137

For Bar & Chain Combos see pages FOR 100–101

Part numbers printed in *red italics* have been obsoleted. Contact your authorized Oregon distributor for availability.

Guide Bar & Saw Chain Applications

Saw Chain						Guide Bars						
						DuraCut™ AT	PowerCut™ RN RW GN PM	SpeedCut™ TXL	VersaCut™ VXL	ControlCut™ PXL	AdvanceCut™ SF SX PX GD MLB	Single Rivet SD DG MLE
Pitch	Gauge	Chain Type	Drive Links	Bar Length	Drive Teeth	Armor Tip	PowerMatch®	Pro-Lite® MG MP	Pro-Lite® SLG SLH GL GP SP	Pro-Lite® SLB	Pro-Am®	DoubleGuard®

Jonsered

...66, 70, 75, 77, 80, 81, 90, 110, 111, 601, 751, 801, 820, 830, 910, 920, 930, 939, 941, 1020; Some saws may take .404" pitch chain, see other applications.

Pitch	Gauge	Chain Type		Drive Links	Bar Length	Drive Teeth	Armor Tip	PowerMatch®	Pro-Lite® MG MP	Pro-Lite® SLG SLH GL GP SP	Pro-Lite® SLB	Pro-Am®	DoubleGuard®
3/8	.058	**AdvanceCut** 73V	**PowerCut** 73EXL, LGX, LPX **VersaCut** 73DPX	060	16	8				*168SLHD024*			
				068	18	8							
				072	20	8		208RNDD024		208VXLHD024			
	.063	**AdvanceCut** 75V	**PowerCut** 75EXL, LGX, LPX **VersaCut** 75DPX	079	21	7	213ATMD196						
				105	32	7							
				117	36	7							

670, 670 West Coast, 2083, 2083II, 2094, 2095; Some saws may take .404" pitch chain, see other applications...

Pitch	Gauge	Chain Type		Drive Links	Bar Length	Drive Teeth	Armor Tip	PowerMatch®	Pro-Lite® MG MP	Pro-Lite® SLG SLH GL GP SP	Pro-Lite® SLB	Pro-Am®	DoubleGuard®
	.050	**AdvanceCut** 72V	**PowerCut** 72EXL, LGX, LPX **VersaCut** 72DPX	060	16	8		160RNDD009		160VXLHD009			
				068	18	8	*180ATMD009*	180RNDD009		*180SLHD009* 180VXLHD009			
				072	20	8	200ATMD009	200RNDD009		200VXLHD009		200SFHD009	
				076	22	7							
				084	24	8	240ATMD009	240RNDD009				240SFHD009	
				092	28	7		280RNDD009 280RWDD009					
				098	30	7		300RNDD009					
				105	32	7		320RNDD009 320RWDD009					
3/8	.058	**AdvanceCut** 73V	**PowerCut** 73EXL, LGX, LPX **VersaCut** 73DPX	052	13	8		138RNDD009		*138SLHD009*			
				056	15	8				158VXLHD009			
				060	16	8	168ATMD009	168RNDD009		168VXLHD009		168SFHD009	
				068	18	8	188ATMD009	188RNDD009		188VXLHD009		188SFHD009	
				072	20	8	208ATMD009	208RNDD009		*208SLHD009* 208VXLHD009		208SFHD009	
				076	22	7		228RNDD009					
				084	24	7	248ATMD009	248RNDD009				248SFHD009	
				089	26	8		268RNDD009					
				092	28	7	288ATMD009	288RNDD009					
				102	30	8		308RNDD009					
				110	33	7		338RWDD009 338PMDD009					
				115	36	7		*368RNDD009*					
				119	37	7		378RWDD009 378PMDD009					

See page FOR 142 for saw chain sharpening tools

* See page FOR 4 for important information on Guard Mate bar-nose tip guards

** See page FOR 4 for important information on Intenz guide bars.

† ANSI B175.1-2012 and CSA Standard Z62.3 regarding reduced kickback does not apply to pole saws or pruners

For the most current fit-up information visit **OregonProducts.com**

Guide Bar & Saw Chain Applications

Saw Chain				Guide Bars									
						DuraCut™ AT	PowerCut™ RN RW GN PM	SpeedCut™ TXL	VersaCut™ VXL	ControlCut™ PXL	AdvanceCut™ SF SX PX GD MLB	Single Rivet SD DG MLE
Pitch	Gauge	Chain Type	Drive Links	Bar Length	Drive Teeth	Armor Tip	PowerMatch®	Pro-Lite® MG MP	Pro-Lite® SLG SLH GL GP SP	Pro-Lite® SLB	Pro-Am®	DoubleGuard®

Jonsered

Pitch	Gauge	Chain Type		Drive Links	Bar Length	Drive Teeth	Armor Tip	PowerMatch®	Pro-Lite® MG MP	Pro-Lite® SLG SLH GL GP SP	Pro-Lite® SLB	Pro-Am®	DoubleGuard®
...670, 670 West Coast, 2083, 2083II, 2094, 2095; Some saws may take .404" pitch chain, see other applications													
3/8	.063	**AdvanceCut** 75V	**PowerCut** 75EXL, LGX, LPX **VersaCut** 75DPX	072	20	7	203ATMD009	203RNDD009					
				084	24	7	243ATMD009	243RNDD009					
				092	28	7		283RNDD009 283RWDD009					
				098	30	7							
				105	32	7		323RNDD009					
				105	32	7		323RWDD009					
				110	34	7		343RNDD009					
				115	36	7		363RNDD009 363RWDD009					
				119	37	7							
				135	42	7		423RNDD009					
66, 70, 75, 77, 80, 81, 90, 110, 111, 490, 601, 751, 801, 820, 830, 910, 920, 930, 939, 1020; Some saws may take 3/8" pitch chain, see other applications.													
.404	.063		**PowerCut** 59L, 68LX **VersaCut** 27X	106	36	7							
670, 670 West Coast, 2077, 2083, 2094, 2095; Some saws may take 3/8" pitch chain, see other applications.													
.404	.063		**PowerCut** 59L, 68LX **VersaCut** 27X	065	20	7							

Kobalt

Pitch	Gauge	Chain Type		Drive Links	Bar Length	Drive Teeth	Armor Tip	PowerMatch®	Pro-Lite® MG MP	Pro-Lite® SLG SLH GL GP SP	Pro-Lite® SLB	Pro-Am®	DoubleGuard®
KPS 80-06													
3/8 low profile	.050	**ControlCut** 91PXL **AdvanceCut** 91PX	**VersaCut** 91VXL	033	8								
KCS 120-06, KCS 120-07													
3/8 low profile	.050	**ControlCut** 91PXL **AdvanceCut** 91PX	**VersaCut** 91VXL	045	12	6				*120SPEA041*		120SXEA041	120SDEA041
KCS 180B-06													
3/8 low profile	.050	**ControlCut** 91PXL **AdvanceCut** 91PX	**VersaCut** 91VXL	062	18	6						*180SXEA041*	180SDEA041

See our guides for chainsaws with a **green triangle** on pages FOR 2–3

See our guides for chainsaws with a **yellow triangle** on pages FOR 2–3

Saw chain complies with low kickback performance requirements (FOR 2–3)

Saw chain does not comply with low kickback performance requirements (FOR 2–3)

For information on our PowerSharp Kits see pages FOR 136–137

For Bar & Chain Combos see pages FOR 100–101

Part numbers printed in *red italics* have been obsoleted. Contact your authorized Oregon distributor for availability.

Guide Bar & Saw Chain Applications

Saw Chain				Guide Bars									
						DuraCut™ AT	PowerCut™ RN RW GN PM	SpeedCut™ TXL	VersaCut™ VXL	ControlCut™ PXL	AdvanceCut™ SF SX PX GD MLB	Single Rivet SD DG MLE
Pitch	Gauge	Chain Type	Drive Links	Bar Length	Drive Teeth	Armor Tip	PowerMatch®	Pro-Lite® MG MP	Pro-Lite® SLG SLH GL GP SP	Pro-Lite® SLB	Pro-Am®	DoubleGuard®

Makita

5012B, 5014NB, 5016NB, DCS 34, DCS 330S, DCS 330TH, DCS 340, DCS 341, DCS 390, DCS 390S, DCS 400, DCS 401, DCS3416, EA3200SRBB, EA3201S35B, EA3201S40B, EA3501S40B, UC3030A, UC3050A, UC3051A, UC3500, UC3530A, UC3550A, UC3551A, UC4000, UC4030A, UC4050A, UC4051A, UC4550A, UC4551A, XCU03, XCU04 — PowerSharp® Compatible

Pitch	Gauge	Chain Type	Drive Links	Bar Length	Drive Teeth	Armor Tip	PowerMatch®	Pro-Lite® MG MP	Pro-Lite® SLG SLH GL GP SP	Pro-Lite® SLB	Pro-Am®	DoubleGuard®
	.050	ControlCut 91PXL AdvanceCut 91PX / VersaCut 91VXL	045	12	6				*120SPEA041*		120SXEA041	120SDEA041
			052	14	6						140SXEA041	140SDEA041
			056	16	6						160SXEA041	160SDEA041
			062	18	6							180SDEA041
	Intenz® **											
3/8 low profile	.050	ControlCut 91PXL AdvanceCut 91PX / VersaCut 91VXL	045	12	6							
			052	14	6				*140SPET041*			140SDET041
			056	16	6				*160SPET041*			160SDET041
			062	18	6							180SDET041
	.043	AdvanceCut 90PX	045	12	6							124MLEA041
			052	14	6							144MLEA041
			056	16	6							*164MLEA041*
EA4300F, EA4301F												
3/8 low profile	.050	ControlCut 91PXL AdvanceCut 91PX / VersaCut 91VXL	052	14	6						140SXEA041	140SDEA041
			056	16	6						160SXEA041	160SDEA041
	Narrow Kerf											
.325	.050	*95VPX* / SpeedCut 95TXL	056	13	7						130MLBK041	
			064	15	7						150MLBK041	
			072	18	7			180TXLGK041 180TXLBK041			180MLBK041	
HCU02C1, HCU02ZX2, XCU02												
3/8 low profile	.043	AdvanceCut 90PX	046	12	6	Original Equipment Guide Bar						
			045	12	6							124MLEA041
DCS 430, DCS 431, DCS 460, DCS 510, DCS 5121, DCS 520i, DCS 540, DCS 5200i, EA5000P53G, EA6100P53G, EA6101P53G...												
	.050	ControlCut 20BPX / PowerCut 20LPX	066	16	7	*160ATMZ095*	160RNBK095		160SLGXK095		*160PXBK095*	
			072	18	7	*180ATMZ095*					180PXBK095	
					8				*180SLGK095* 180VXLGK095			
			078	20	8	200ATMZ095	200RNBK095		*200SLGK095* 200VXLGK095		200PXBK095	
.325	.058	ControlCut 21BPX / PowerCut 21LPX	056	13	7					*138SLBK095* 138PXLBK095		
			064	15	8		158RNBK095		158VXLGK095	158PXLBK095		
			066	16	7		168RNBK095		168VXLGK095	*168SLBK095* 168PXLBK095	168VXLGK095 168PXBK095	
			072	18	8		188RNBK095		*188SLGK095* 188VXLGK095	188PXLBK095	188VXLGK095 188PXBK095	
			078	20	7		208RNBK095		*208SLGK095* 208VXLGK095		208PXBK095	

See page FOR 142 for saw chain sharpening tools

* See page FOR 4 for important information on Guard Mate bar-nose tip guards

** See page FOR 4 for important information on Intenz guide bars.

† ANSI B175.1-2012 and CSA Standard Z62.3 regarding reduced kickback does not apply to pole saws or pruners

For the most current fit-up information visit **OregonProducts.com**

Guide Bar & Saw Chain Applications

Saw Chain | **Guide Bars**

Pitch	Gauge	Chain Type	Drive Links	Bar Length	Drive Teeth	DuraCut™ AT Armor Tip	PowerCut™ RN RW GN PM PowerMatch®	SpeedCut™ TXL MG MP Pro-Lite®	VersaCut™ VXL SLG SLH GL GP SP Pro-Lite®	ControlCut™ PXL SLB Pro-Lite®	AdvanceCut™ SF SX PX GD MLB Pro-Am®	Single Rivet SD DG MLE DoubleGuard®
Makita ▲												
...DCS 430, DCS 431, DCS 460, DCS 510, DCS 5121, DCS 520i, DCS 540, DCS 5200i, EA5000P53G, EA6100P53G, EA6101P53G												
Narrow Kerf												
.325	.050	*95VPX*	056	13	7			*130MPBK095* 130TXLBK095			130MLBK095	
		SpeedCut 95TXL	064	15	7			150TXLBK095			150MLBK095	
			066	16	7			*160MPBK095* 160TXLBK095			160MLBK095	
			072	18	7			180TXLBK095			180MLBK095	
			078	20	7			200TXLBK095				
3/8	.050	**AdvanceCut** 72V	059	16	7						160PXDK095	
			060	16	7	160ATMK095	160RNDK095		160VXLHK095		160SFHK095	
		PowerCut 72EXL, LGX, LPX **VersaCut** 72DPX	064	18	7	180ATMZ095						
			070	20	7	200ATMZ095						
			072	20	7	200ATMK095	200RNDK095		200VXLHK095		200SFHK095	
			081	23	7							
	.058	**AdvanceCut** 73V	059	16	7							
		PowerCut 73EXL, LGX, LPX **VersaCut** 73DPX	060	16	7	168ATMK095	168RNDK095		168VXLHK095		168SFHK095	
			064	18	7		188RNDZ095		*188SLHK095* 188VXLHK095			
DCS 6000i, DCS 6800i												
3/8	.050	**AdvanceCut** 72V	059	16	7	*160ATMZ095*					160PXDK095	
			060	16	7	160ATMK095	160RNDK095		160VXLHK095		160SFHK095	
		PowerCut 72EXL, LGX, LPX **VersaCut** 72DPX	064	18	7	180ATMZ095						
			070	20	7	200ATMZ095						
			072	20	7	200ATMK095	200RNDK095		200VXLHK095		200SFHK095	
			081	23	7							
	.058	**AdvanceCut** 73V	059	16	7							
		PowerCut 73EXL, LGX, LPX **VersaCut** 73DPX	060	16	7	168ATMK095	168RNDK095		168VXLHK095		168SFHK095	
			064	18	7		188RNDZ095		*188SLHK095* 188VXLHK095			

▲ See our guides for chainsaws with a **green triangle** on pages FOR 2–3

▲ See our guides for chainsaws with a **yellow triangle** on pages FOR 2–3

Saw chain complies with low kickback performance requirements (FOR 2–3)

Saw chain does not comply with low kickback performance requirements (FOR 2–3)

For information on our PowerSharp Kits see pages FOR 136–137

For Bar & Chain Combos see pages FOR 100–101

Part numbers printed in *red italics* have been obsoleted. Contact your authorized Oregon distributor for availability.

Guide Bar & Saw Chain Applications

Saw Chain							Guide Bars						
						DuraCut™ AT	PowerCut™ RN RW GN PM	SpeedCut™ TXL	VersaCut™ VXL	ControlCut™ PXL	AdvanceCut™ SF SX PX GD MLB	Single Rivet SD DG MLE
Pitch	Gauge	Chain Type	Drive Links	Bar Length	Drive Teeth	Armor Tip	PowerMatch®	Pro-Lite® MG MP	Pro-Lite® SLG SLH GL GP SP	Pro-Lite® SLB	Pro-Am®	DoubleGuard®

Makita

DCS 6400, DCS 6401, DCS 6420, DCS 6421, DCS 7300, DCS 7301, DCS 7900, DCS 7901, DCS 9000, DCS 9010 FL; Some saws may take .404" pitch chain, see other applications...

Pitch	Gauge	Chain Type	Chain Type	Drive Links	Bar Length	Drive Teeth	Armor Tip	PowerMatch®	Pro-Lite® MG MP	Pro-Lite® SLG SLH GL GP SP	Pro-Lite® SLB	Pro-Am®	DoubleGuard®
3/8	.050	**AdvanceCut** 72V	**PowerCut** 72EXL, LGX, LPX **VersaCut** 72DPX	060	16	8		160RNDD009		160VXLHD009			
				068	18	8	*180ATMD009*	180RNDD009		*180SLHD009* 180VXLHD009			
				072	20	8	200ATMD009	200RNDD009		200VXLHD009		200SFHD009	
				076	22	7							
				084	24	8	240ATMD009	240RNDD009				240SFHD009	
				093	28	7		280RNDD009					
				093	28	7		280RWDD009					
				098	30	7		300RNDD009					
				105	32	7		320RNDD009					
				105	32	7		320RWDD009					
	.058	**AdvanceCut** 73V	**PowerCut** 73EXL, LGX, LPX **VersaCut** 73DPX	052	13	8		138RNDD009		*138SLHD009*			
				056	15	8				158VXLHD009			
				060	16	8	168ATMD009	168RNDD009		168VXLHD009		168SFHD009	
				068	18	8	188ATMD009	188RNDD009		188VXLHD009		188SFHD009	
				072	20	8	208ATMD009	208RNDD009		*208SLHD009* 208VXLHD009		208SFHD009	
				076	22	7		228RNDD009					
				084	24	7	248ATMD009	248RNDD009				248SFHD009	
				089	26	8		268RNDD009					
				092	28	7	288ATMD009	288RNDD009					
				102	30	8		308RNDD009					
				105	32	8		*328RNDD009*					
				110	33	7		338RWDD009 338PMDD009					
				115	36	7		*368RNDD009*					
				119	37	7		378RWDD009 378PMDD009					

See page FOR 142 for saw chain sharpening tools

* See page FOR 4 for important information on Guard Mate bar-nose tip guards

** See page FOR 4 for important information on Intenz guide bars.

† ANSI B175.1-2012 and CSA Standard Z62.3 regarding reduced kickback does not apply to pole saws or pruners

For the most current fit-up information visit **OregonProducts.com**

Guide Bar & Saw Chain Applications

Saw Chain				Guide Bars									
						DuraCut™ AT	PowerCut™ RN RW GN PM	SpeedCut™ TXL	VersaCut™ VXL	ControlCut™ PXL	AdvanceCut™ SF SX PX GD MLB	Single Rivet SD DG MLE
Pitch	Gauge	Chain Type	Drive Links	Bar Length	Drive Teeth	Armor Tip	PowerMatch®	Pro-Lite® MG MP	Pro-Lite® SLG SLH GL GP SP	Pro-Lite® SLB	Pro-Am®	DoubleGuard®

Makita

Pitch	Gauge	Chain Type		Drive Links	Bar Length	Drive Teeth	Armor Tip	PowerMatch®	Pro-Lite® MG MP	Pro-Lite® SLG SLH GL GP SP	Pro-Lite® SLB	Pro-Am®	DoubleGuard®
...DCS 6400, DCS 6401, DCS 6420, DCS 6421, DCS 7300, DCS 7301, DCS 7900, DCS 7901, DCS 9000, DCS 9010 FL; Some saws may take .404" pitch chain, see other applications.													
3/8	.063	**AdvanceCut** 75V	**PowerCut** 75EXL, LGX, LPX **VersaCut** 75DPX	072	20	7	203ATMD009	203RNDD009					
				084	24	7	243ATMD009	243RNDD009					
				093	28	7		283RNDD009 283RWDD009					
				098	30	7							
				105	32	7		323RNDD009 323RWDD009					
				110	34	7		343RNDD009					
				115	36	7		363RNDD009 363RWDD009					
				119	37	7							
				135	42	7		423RNDD009					
DCS 9000, DCS 9010FL; Some saws may take 3/8" pitch chain, see other applications.													
.404	.063		**PowerCut** 59L, 68LX **VersaCut** 27X	065	20	7							

Maruyama

Pitch	Gauge	Chain Type		Drive Links	Bar Length	Drive Teeth	Armor Tip	PowerMatch®	Pro-Lite® MG MP	Pro-Lite® SLG SLH GL GP SP	Pro-Lite® SLB	Pro-Am®	DoubleGuard®
Pole Saw Models MC-PL10, MC-PS10, P23-10, MC-PS/PL													
3/8 low profile	.050	**ControlCut** 91PXL **AdvanceCut** 91PX	**VersaCut** 91VXL	040	10	7							100SDEA218
MCV31R, MCV31T													
3/8 low profile	.050	**ControlCut** 91PXL **AdvanceCut** 91PX	**VersaCut** 91VXL	040	10	6							100SDEA041
				045	12	6						120SXEA041	120SDEA041
				052	14	6						140SXEA041	140SDEA041
MCV51R													
.325	.050	**ControlCut** 20BPX	**PowerCut** 20LPX	072	18	7	180ATMZ095			180VXLGK095		180PXBK095	
				078	20	7	200ATMZ095	200RNBK095		200VXLGK095		200PXBK095	
3/8	.050	**AdvanceCut** 72V	**PowerCut** 72EXL, LGX, LPX **VersaCut** 72DPX	068	18	7		180RNDK095		180VXLHK095		180SFHK095	
				072	20	7	200ATMK095	200RNDK095		200VXLHK095		200SFHK095	
MCV42													
Narrow Kerf													
.325	.050	*95VPX*	**SpeedCut** 95TXL	064	15	7						150MLBK041	

See our guides for chainsaws with a **green triangle** on pages FOR 2–3

See our guides for chainsaws with a **yellow triangle** on pages FOR 2–3

Saw chain complies with low kickback performance requirements (FOR 2–3)

Saw chain does not comply with low kickback performance requirements (FOR 2–3)

For information on our PowerSharp Kits see pages FOR 136–137

For Bar & Chain Combos see pages FOR 100–101

Part numbers printed in *red italics* have been obsoleted. Contact your authorized Oregon distributor for availability.

Guide Bar & Saw Chain Applications

Saw Chain				Guide Bars									
						DuraCut™ AT	PowerCut™ RN RW GN PM	SpeedCut™ TXL	VersaCut™ VXL	ControlCut™ PXL	AdvanceCut™ SF SX PX GD MLB	Single Rivet SD DG MLE
Pitch	Gauge	Chain Type	Drive Links	Bar Length	Drive Teeth	Armor Tip	PowerMatch®	Pro-Lite® MG MP	Pro-Lite® SLG SLH GL GP SP	Pro-Lite® SLB	Pro-Am®	DoubleGuard®

McCulloch

Pitch	Gauge	Chain Type	Drive Links	Bar Length	Drive Teeth	Armor Tip	PowerMatch®	Pro-Lite® MG MP	Pro-Lite® SLG SLH GL GP SP	Pro-Lite® SLB	Pro-Am®	DoubleGuard®
12A/S, EM 12												
3/8 low profile	.050	**ControlCut** 91PXL **AdvanceCut** 91PX / **VersaCut** 91VXL	044	12	6							120SDEA318
14A/S, EM 16												
3/8 low profile	.050	**ControlCut** 91PXL **AdvanceCut** 91PX / **VersaCut** 91VXL	049	14	6							140SDEA318
			054	16	6							160SDEA318
			060	18	6							180SDEA318
MCP1510 Pole Saw†, MS1015, MS1015P												
3/8 low profile	.050	**ControlCut** 91PXL **AdvanceCut** 91PX / **VersaCut** 91VXL	039	10	5							
	.043	**AdvanceCut** 90PX	039	10	5							104MLEA318
MS 1630NT, MS 1640NT												
3/8 low profile	.050	**ControlCut** 91PXL **AdvanceCut** 91PX / **VersaCut** 91VXL	056	16	6							160SDEA318
EM 300S												
3/8 low profile	.050	**ControlCut** 91PXL **AdvanceCut** 91PX / **VersaCut** 91VXL	050	14	5							
			055	16	5							
2138, 3214, 3216, 3514, 3516, 3518, 3816, 3818, 3818AV; Eager Beaver: 2010, 2014, 2016, 2116, 2318; EB 2.3, EB 6a, MacCat: 16, 18; Mac Series: 110, 115, 120, 130, 140, 155, 160S, 165, 175, 310, 320, 330, 340, 355, 365, 375, 430, 435, 440, 445, 510, 515; MCC1514, Mini Mac (All Models), MS1415, MS1420, MS1430, MS1432, MS1435, MS1455, MS1635, MS1635AV, MS1635NAV, MS1635NAVCC, MS1645, MS1838, MS1838 AVCC, MS1838AV, MS1842 AVCC, MS1846 AVCC, PM380 (1 bolt bar), PM400 (1 bolt bar), Power Mac Series: 6, 145-14, 225-16; ProMac Series: 3200, 3205, 3205-14, 3210, 3212, 3214, 3216, 3219, 3505, 3800, 3805, 3818, 3850; Silver Eagle Series: 2010, 2012, 2012S, 2014, 2014S, 2016, 2018S, 2316; SP-40, Super 16, Super 18, Titan Series: 35, 36, 37, 38, 39, 40; Wildcat												
3/8 low profile	.050	**ControlCut** 91PXL **AdvanceCut** 91PX / **VersaCut** 91VXL	044	12	6							120SDEA318
			049	14	6						140SXEA318	140SDEA318
			054	16	6						160SXEA318	160SDEA318
			060	18	6							180SDEA318

See page FOR 142 for saw chain sharpening tools

* See page FOR 4 for important information on Guard Mate bar-nose tip guards

** See page FOR 4 for important information on Intenz guide bars.

† ANSI B175.1-2012 and CSA Standard Z62.3 regarding reduced kickback does not apply to pole saws or pruners

For the most current fit-up information visit **OregonProducts.com**

Guide Bar & Saw Chain Applications

Saw Chain | **Guide Bars**

Pitch	Gauge	Chain Type	Drive Links	Bar Length	Drive Teeth	DuraCut™ AT Armor Tip	PowerCut™ RN RW GN PM PowerMatch®	SpeedCut™ TXL MG MP Pro-Lite®	VersaCut™ VXL SLG SLH GL GP SP Pro-Lite®	ControlCut™ PXL SLB Pro-Lite®	AdvanceCut™ SF SX PX GD MLB Pro-Am®	Single Rivet SD DG MLE DoubleGuard®

McCulloch ▲

Mac 4600, Mac 4700, Mac 4900, Mac 5000, Mac 5500, MS 1846 AV, MS 1849 AV, MS 1850, MS 2046 AV, MS 2046 AVCC, MS 2049, MS 2049 AV, MS 2049 AVCC, MS 2050, Pro Mac 1845 AV, Pro Mac: 40, 46; Silver Eagle: 2818, 3020; Timber Bear 20 (Later models)

.325	.050	**ControlCut** 20BPX	**PowerCut** 20LPX	066	16	8	*160ATMZ095*	160RNBK095		*160SLGK095* 160VXLGK095		*160PXBK095*	
				072	18	7	*180ATMZ095*					180PXBK095	
				072	18	8				*180SLGK095* 180VXLGK095			
				078	20	8	200ATMZ095	200RNBK095		*200SLGK095* 200VXLGK095		200PXBK095	
	.058	**ControlCut** 21BPX	**PowerCut** 21LPX	066	16	8				168VXLGK095		168SFGK095	
				072	18	8				*188SLGK095* 188VXLGK095	188PXLBK095	188PXBK095 188SFGK095	
				078	20	8				*208SLGK095* 208VXLGK095		208PXBK095 208SFGK095	
Narrow Kerf													
.325	.050	*95VPX*	**SpeedCut** 95TXL	066	16	8			*160MPBK095* 160TXLBK095			160MLBK095	
				072	18	8			180TXLBK095			180MLBK095	
				078	20	8			200TXLBK095				
10E, EB12ES, EB14ES, EB16ES, MCC3516, MCC3516F, MCC4516F, MCC4516FK, MS 1630NT, MS 1640NT, MS1425, MS1630, MS1640													
3/8 low profile	.050	**ControlCut** 91PXL **AdvanceCut** 91PX	**VersaCut** 91VXL	039	10	6							100SDEA218
				045	12	6							120SDEA318
				050	14	6						140SXEA318	140SDEA318
				055	16	6						160SXEA318	160SDEA318
				060	18	6							180SDEA318
PM 380 (2-bolt bar), PM 400 (2-bolt bar)													
3/8 low profile	.050	**ControlCut** 91PXL **AdvanceCut** 91PX	**VersaCut** 91VXL	055	16	6						160SXEA318	160SDEA318
				060	18	6							180SDEA318
EB 428, MS 1434, MS 1436, MS 1636, MS 1639NAVCC, MS 1839, MS1842AVCC													
3/8 low profile	.050	**ControlCut** 91PXL **AdvanceCut** 91PX	**VersaCut** 91VXL	049	14	6							*140SDEZ095*
				054	16	6							160SDEZ095
				060	18	6							180SDEA095
EB 356A, EB 358, Mac Cat 438, MC3516, MC4218AV, MCC1435A, MCC1635A, MCC1840B, MP406, MS354A, MS 4016P, MS 4018P, MXC1840D, MXC1840DK											**PowerSharp® Compatible**		
	.050	**ControlCut** 91PXL **AdvanceCut** 91PX	**VersaCut** 91VXL	056	16	6						160SXEA041	160SDEA041
				062	18	6							180SDEA041
3/8 low profile	Intenz **												
	.050	**ControlCut** 91PXL **AdvanceCut** 91PX	**VersaCut** 91VXL	056	16	6				*160SPET041*			160SDET041
				062	18	6							180SDET041

▲ See our guides for chainsaws with a **green triangle** on pages FOR 2–3

▲ See our guides for chainsaws with a **yellow triangle** on pages FOR 2–3

Saw chain complies with low kickback performance requirements (FOR 2–3)

Saw chain does not comply with low kickback performance requirements (FOR 2–3)

For information on our PowerSharp Kits see pages FOR 136–137

For Bar & Chain Combos see pages FOR 100–101

Part numbers printed in *red italics* have been obsoleted. Contact your authorized Oregon distributor for availability.

Guide Bar & Saw Chain Applications

Saw Chain				Guide Bars									
						DuraCut™ AT	PowerCut™ RN RW GN PM	SpeedCut™ TXL	VersaCut™ VXL	ControlCut™ PXL	AdvanceCut™ SF SX PX GD MLB	Single Rivet SD DG MLE
Pitch	Gauge	Chain Type	Drive Links	Bar Length	Drive Teeth	Armor Tip	PowerMatch®	Pro-Lite® MG MP	Pro-Lite® SLG SLH GL GP SP	Pro-Lite® SLB	Pro-Am®	DoubleGuard®

McCulloch

Mac 1-10, 2-10, 3-10, 4-10, 5-10, 6-10, 10-10, 10-10A, 55, Pro Mac 55, 60, 555, 570, 605, CP-55, Double Eagle 50, Eager Beaver 3.7, PM 605, ProMac 5700, Silver Eagle 3420, Silver Eagle 3720, SP-60, Timber Bear (Earlier models), Titan 50, Titan 57

Pitch	Gauge	Chain Type	Chain Type	Drive Links	Bar Length	Drive Teeth	Armor Tip	PowerMatch®	Pro-Lite® MG MP	Pro-Lite® SLG SLH GL GP SP	Pro-Lite® SLB	Pro-Am®	DoubleGuard®
3/8	.050	**AdvanceCut** 72V	**PowerCut** 72EXL, LGX, LPX **VersaCut** 72DPX	060	16	7	*160ATMD176*	160RNDD176		160VXLHD176		160PXDD176	
				064	18	7				180VXLHD176			
				066	18	7		180RNDD176				180PXDD176	
				070	20	7	200ATMD176	200RNDD176		200VXLHD176		200PXDD176	
				081	24	7		240RNDD176					
				092	28	7		280RNDD176					

McCulloch

Mac 7-10, 560, 610, 620, 650, 655, 700, 800, 805, 850, 1000, CP70, CP70L, Double Eagle 80, ProMac 8200, SP70, SP80, SP81, Titan 70

Pitch	Gauge	Chain Type	Chain Type	Drive Links	Bar Length	Drive Teeth	Armor Tip	PowerMatch®	Pro-Lite® MG MP	Pro-Lite® SLG SLH GL GP SP	Pro-Lite® SLB	Pro-Am®	DoubleGuard®
3/8	.050	**AdvanceCut** 72V	**PowerCut** 72EXL, LGX, LPX **VersaCut** 72DPX	060	16	7	*160ATMD176*	160RNDD176		160VXLHD176 *160GLHD176*		160PXDD176	
				064	18	7				180VXLHD176			
				066	18	7		180RNDD176				180PXDD176	
				070	20	7	200ATMD176	200RNDD176		200VXLHD176 *200GLHD176*		200PXDD176	
				081	24	7		240RNDD176					
				084	24	7	240ATMD176						
				092	28	7		280RNDD176					

Olympyk (Oleo-Mac)

240, 241, 244, 935, OLE 140F, OLE 300 — PowerSharp® Compatible

Pitch	Gauge	Chain Type	Chain Type	Drive Links	Bar Length	Drive Teeth	Armor Tip	PowerMatch®	Pro-Lite® MG MP	Pro-Lite® SLG SLH GL GP SP	Pro-Lite® SLB	Pro-Am®	DoubleGuard®
	.050	**ControlCut** 91PXL **AdvanceCut** 91PX	**VersaCut** 91VXL	050	14	7				*140SPEA074*		140SXEA074	140SDEA074
				055	16	7				*160SPEA074*		160SXEA074	160SDEA074
3/8 low profile	Intenz **												
	.050	**ControlCut** 91PXL **AdvanceCut** 91PX	**VersaCut** 91VXL	050	14	7				*140SPET074*			*140SDET074*
				055	16	7				*160SPET074*			*160SDET074*

See page FOR 142 for saw chain sharpening tools

* See page FOR 4 for important information on Guard Mate bar-nose tip guards

** See page FOR 4 for important information on Intenz guide bars.

† ANSI B175.1-2012 and CSA Standard Z62.3 regarding reduced kickback does not apply to pole saws or pruners

For the most current fit-up information visit **OregonProducts.com**

Guide Bar & Saw Chain Applications

Saw Chain				Guide Bars								
						DuraCut™ AT	PowerCut™ RN RW GN PM	SpeedCut™ TXL	VersaCut™ VXL	ControlCut™ PXL	AdvanceCut™ SF SX PX GD MLB	Single Rivet SD DG MLE
Pitch	Gauge	Chain Type	Drive Links	Bar Length	Drive Teeth	Armor Tip	PowerMatch®	Pro-Lite® MG MP	Pro-Lite® SLG SLH GL GP SP	Pro-Lite® SLB	Pro-Am®	DoubleGuard®

Olympyk (Oleo-Mac)

938, 940C, 941, 945, 950, 951, 956, 962

Pitch	Gauge	Chain Type		Drive Links	Bar Length	Drive Teeth	Armor Tip	PowerMatch®	Pro-Lite® MG MP	Pro-Lite® SLG SLH GL GP SP	Pro-Lite® SLB	Pro-Am®	DoubleGuard®
.325	.050	**ControlCut** 20BPX	**PowerCut** 20LPX	066	16	8	*160ATMZ095*	160RNBK095		*160SLGK095* 160VXLGK095		*160PXBK095*	
				072	18	7	*180ATMZ095*			*180SLBK095* *180SLGK095*		180PXBK095	
				072	18	8				180VXLGK095			
				078	20	7	200ATMK095			*200SLGK095* 200VXLGK095		200PXBK095	
	.058	**ControlCut** 21BPX	**PowerCut** 21LPX	066	16	7		168RNBK095		168VXLGK095	*168SLBK095* 168PXLBK095	168SFGK095 168PXBK095	
				072	18	8		188RNBK095		*188SLGK095* 188VXLGK095	188PXLBK095	188SFGK095 188PXBK095	
				078	20	7		208RNBK095			*208SLGK095* 208VXLGK095	208PXBK095 208SFGK095	
	Narrow Kerf												
	.050	*95VPX*	**SpeedCut** 95TXL	066	16	7			*160MPBK095* 160TXLBK095			160MLBK095	
				072	18	7			180TXLBK095			180MLBK095	
				078	20	7			200TXLBK095				

250, 250A, 251, 252, 254, 260, 261, 264, 355, 460A Super

Pitch	Gauge	Chain Type		Drive Links	Bar Length	Drive Teeth	Armor Tip	PowerMatch®	Pro-Lite® MG MP	Pro-Lite® SLG SLH GL GP SP	Pro-Lite® SLB	Pro-Am®	DoubleGuard®
3/8	.050	**AdvanceCut** 72V	**PowerCut** 72EXL, LGX, LPX **VersaCut** 72DPX	060	16	7		*160RNDD196*		*160GLHD196*		160GDDD096	
				064	18	8							
				066	18	7							
				070	20	7		*200GNDD196* 200RNDD196		*200GLHD196*		200GDDD096	
				081	24	7		240RNDD196					
				093	27	7		*270GNDD196*					
	.058	**AdvanceCut** 73V	**PowerCut** 73EXL, LGX, LPX **VersaCut** 73DPX	060	16	8				*168SLHD024*			
				068	18	8							
				072	20	8		208RNDD024		208VXLHD024			

See our guides for chainsaws with a **green triangle** on pages FOR 2–3

See our guides for chainsaws with a **yellow triangle** on pages FOR 2–3

Saw chain complies with low kickback performance requirements (FOR 2–3)

Saw chain does not comply with low kickback performance requirements (FOR 2–3)

For information on our PowerSharp Kits see pages FOR 136–137

For Bar & Chain Combos see pages FOR 100–101

Part numbers printed in *red italics* have been obsoleted. Contact your authorized Oregon distributor for availability.

Guide Bar & Saw Chain Applications

Saw Chain				Guide Bars									
		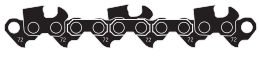				DuraCut™ AT	PowerCut™ RN RW GN PM	SpeedCut™ TXL	VersaCut™ VXL	ControlCut™ PXL	AdvanceCut™ SF SX PX GD MLB	Single Rivet SD DG MLE
Pitch	Gauge	Chain Type	Drive Links	Bar Length	Drive Teeth	Armor Tip	PowerMatch®	Pro-Lite® MG MP	Pro-Lite® SLG SLH GL GP SP	Pro-Lite® SLB	Pro-Am®	DoubleGuard®

Olympyk (Oleo-Mac)

48, 70, 272, 280, 284, 461, 480A Super, 980, Super 482 Note: D196 bar tail slot must be filed .020" for proper fit-up

3/8	.050	**AdvanceCut** 72V	**PowerCut** 72EXL, LGX, LPX **VersaCut** 72DPX	060	16	7						160GDDD096	
				064	18	8							
				066	18	7							
				070	20	7				*200GLHD196*		200GDDD096	
				081	24	7							
				093	27	7		*270GNDD196*					
	.058	**AdvanceCut** 73V	**PowerCut** 73EXL, LGX, LPX **VersaCut** 73DPX	060	16	8							
				068	18	8							
				072	20	8		208RNDD024		208VXLHD024			
	.063	**AdvanceCut** 75V	**PowerCut** 75EXL, LGX, LPX **VersaCut** 75DPX	072	21	7	213ATMD196						
999													
.404	.063		**PowerCut** 59L, 68LX **VersaCut** 27X	068	21	7		213RNFE031					
				080	25	7		253RNFE031					

Oregon® Outdoor Power Equipment / Cordless Tool System / Power Now®

PS250, PS250-E6, PS250-A6													
3/8 low profile	.043	**AdvanceCut** 90PX		034	8	7							084MLEA041
CS1500												**PowerSharp® Equipped**	
3/8 low profile	.050	PowerSharp® 91PS		062	18	6							180SDEA041
CS250, CS250-S6, CS250-E6, CS250-A6												**PowerSharp Equipped**	
3/8 low profile	.050	PowerSharp 91PS		052	14	6							548182 140SDEA041
CS300, CS300-E6, CS300-A6												**PowerSharp Equipped**	
3/8 low profile	.050	PowerSharp 91PS		056	16	6							160SDEA041

See page FOR 142 for saw chain sharpening tools

* See page FOR 4 for important information on Guard Mate bar-nose tip guards

** See page FOR 4 for important information on Intenz guide bars.

† ANSI B175.1-2012 and CSA Standard Z62.3 regarding reduced kickback does not apply to pole saws or pruners

For the most current fit-up information visit **OregonProducts.com**

Guide Bar & Saw Chain Applications

Saw Chain | **Guide Bars**

Pitch	Gauge	Chain Type	Drive Links	Bar Length	Drive Teeth	DuraCut™ AT	PowerCut™ RN RW GN PM	SpeedCut™ TXL	VersaCut™ VXL	ControlCut™ PXL	AdvanceCut™ SF SX PX GD MLB	Single Rivet SD DG MLE
						Armor Tip	PowerMatch®	MG MP	Pro-Lite® SLG SLH GL GP SP	SLB	Pro-Am®	DoubleGuard®

Partner

Pitch	Gauge	Chain Type		Drive Links	Bar Length	Drive Teeth	Armor Tip	PowerMatch®	MG MP	Pro-Lite® SLG SLH GL GP SP	Pro-Lite® SLB	Pro-Am®	DoubleGuard®
365													
3/8 low profile	.050	**ControlCut** 91PXL **AdvanceCut** 91PX	**VersaCut** 91VXL	052	14	6						140SXEA041	140SDEA041
330, 350, 1601, 1602, 1610, 1611, 1612, 1613, 1614, 1616, Mini-P Series, Spartan													
3/8 low profile	.050	**ControlCut** 91PXL **AdvanceCut** 91PX	**VersaCut** 91VXL	045	12	6							*120SDEA064*
				052	14	6							*140SDEA064*
				056	16	6							
P-360, P-400, P-450, P-500, P-5000													
	.050	**ControlCut** 20BPX	**PowerCut** 20LPX	066	16	7	*160ATMZ095*	160RNBK095		*160SLGK095* 160VXLGK095		*160PXBK095*	
				072	18	7	*180ATMZ095*				*180SLBK095*	180PXBK095	
				072	18	8				*180SLGK095* 180VXLGK095			
				078	20	8	200ATMZ095	200RNBK095		*200SLGK095* 200VXLGK095		200PXBK095	
.325	.058	**ControlCut** 21BPX	**PowerCut** 21LPX	056	13	7					*138SLBK095* 138PXLBK095		
				064	15	8		158RNBK095		158VXLGK095	158PXLBK095		
				066	16	7		168RNBK095		168VXLGK095	*168SLBK095* 168PXLBK095	168SFGK095 168PXBK095	
				072	18	8		188RNBK095		*188SLGK095* 188VXLGK095	188PXLBK095	188SFGK095 188PXBK095	
				078	20	7		208RNBK095		*208SLGK095* 208VXLGK095		208PXBK095 208SFGK095	
Narrow Kerf													
.325	.050	*95VPX*	**SpeedCut** 95TXL	056	13	7			*130MPBK095* 130TXLBK095			130MLBK095	
				064	15	7			150TXLBK095			150MLBK095	
				066	16	7			*160MPBK095* 160TXLBK095			160MLBK095	
				072	18	7			180TXLBK095			180MLBK095	
410, 510, 540													
Narrow Kerf													
.325	.050	*95VPX*	**SpeedCut** 95TXL	056	13	7			*130MPBK095* 130TXLBK095			130MLBK095	
				064	15	7			150TXLBK095			150MLBK095	

See our guides for chainsaws with a **green triangle** on pages FOR 2–3

See our guides for chainsaws with a **yellow triangle** on pages FOR 2–3

Saw chain complies with low kickback performance requirements (FOR 2–3)

Saw chain does not comply with low kickback performance requirements (FOR 2–3)

For information on our PowerSharp Kits see pages FOR 136–137

For Bar & Chain Combos see pages FOR 100–101

Part numbers printed in *red italics* have been obsoleted. Contact your authorized Oregon distributor for availability.

Guide Bar & Saw Chain Applications

Saw Chain				Guide Bars									
						DuraCut™ AT	PowerCut™ RN RW GN PM	SpeedCut™ TXL	VersaCut™ VXL	ControlCut™ PXL	AdvanceCut™ SF SX PX GD MLB	Single Rivet SD DG MLE
Pitch	Gauge	Chain Type	Drive Links	Bar Length	Drive Teeth	Armor Tip	PowerMatch®	Pro-Lite® MG MP	Pro-Lite® SLG SLH GL GP SP	Pro-Lite® SLB	Pro-Am®	DoubleGuard®

Partner

550, 1655, 2055, P-55, R-11, R-12, R-14, R-16, R-17, R-18, R-19, S-50, S-55, S-65

Pitch	Gauge	Chain Type		Drive Links	Bar Length	Drive Teeth	Armor Tip	PowerMatch®	Pro-Lite® MG MP	Pro-Lite® SLG SLH GL GP SP	Pro-Lite® SLB	Pro-Am®	DoubleGuard®
3/8	.050	**AdvanceCut** 72V	**PowerCut** 72EXL, LGX, LPX **VersaCut** 72DPX	060	16	8		160RNDD009		160VXLHD009			
				068	18	8	*180ATMD009*	180RNDD009		*180SLHD009* 180VXLHD009			
				072	20	8	200ATMD009	200RNDD009		200VXLHD009		200SFHD009	
	.058	**AdvanceCut** 73V	**PowerCut** 73EXL, LGX, LPX **VersaCut** 73DPX	052	13	8		138RNDD009		*138SLHD009*			
				056	15	8				158VXLHD009			
				060	16	8	168ATMD009	168RNDD009		168VXLHD009		168SFHD009	
				068	18	7	188ATMD009	188RNDD009		188VXLHD009		188SFHD009	
				072	20	8	208ATMD009	208RNDD009		*208SLHD009* 208VXLHD009		208SFHD009	
	.063	**AdvanceCut** 75V	**PowerCut** 75EXL, LGX, LPX **VersaCut** 75DPX	072	20	8	203ATMD009	203RNDD009					

Partner

650, 7000, P-65, P-70, P-85, P-100, R-20, R-21, R-22, R-23, R-30, R-35, R-40, R-416, R-420, R-421, R-435, R-440

Pitch	Gauge	Chain Type		Drive Links	Bar Length	Drive Teeth	Armor Tip	PowerMatch®	Pro-Lite® MG MP	Pro-Lite® SLG SLH GL GP SP	Pro-Lite® SLB	Pro-Am®	DoubleGuard®
3/8	.050	**AdvanceCut** 72V	**PowerCut** 72EXL, LGX, LPX **VersaCut** 72DPX	060	16	8		160RNDD009		160VXLHD009			
				068	18	8	*180ATMD009*	180RNDD009		*180SLHD009* 180VXLHD009			
				072	20	8	200ATMD009	200RNDD009		200VXLHD009		200SFHD009	
	.058	**AdvanceCut** 73V	**PowerCut** 73EXL, LGX, LPX **VersaCut** 73DPX	052	13	8		138RNDD009		*138SLHD009*			
				056	15	8				158VXLHD009			
				060	16	8	168ATMD009	168RNDD009		168VXLHD009		168SFHD009	
				068	18	7	188ATMD009	188RNDD009		188VXLHD009		188SFHD009	
				072	20	8	208ATMD009	208RNDD009		*208SLHD009* 208VXLHD009		208SFHD009	
	.063	**AdvanceCut** 75V	**PowerCut** 75EXL, LGX, LPX **VersaCut** 75DPX	072	20	8	203ATMD009	203RNDD009					

See page FOR 142 for saw chain sharpening tools

* See page FOR 4 for important information on Guard Mate bar-nose tip guards

** See page FOR 4 for important information on Intenz guide bars.

† ANSI B175.1-2012 and CSA Standard Z62.3 regarding reduced kickback does not apply to pole saws or pruners

For the most current fit-up information visit **OregonProducts.com**

Guide Bar & Saw Chain Applications

Saw Chain | **Guide Bars**

Pitch	Gauge	Chain Type	Drive Links	Bar Length	Drive Teeth	DuraCut™ AT Armor Tip	PowerCut™ RN RW GN PM PowerMatch®	SpeedCut™ TXL MG MP Pro-Lite®	VersaCut™ VXL SLG SLH GL GP SP Pro-Lite®	ControlCut™ PXL SLB Pro-Lite®	AdvanceCut™ SF SX PX GD MLB Pro-Am®	Single Rivet SD DG MLE DoubleGuard®
Pioneer ▲												
P-10, P-12												
3/8 low profile	.050	**ControlCut** 91PXL **AdvanceCut** 91PX	**VersaCut** 91VXL	045	12	6						*120SDEA064*
				052	14	6						*140SDEA064*
				056	16	6			*160SPEA064*			
1074, P-21, P-26, P-28												
.325	.050	**ControlCut** 20BPX	**PowerCut** 20LPX	066	16	7	*160ATMZ095*	160RNBK095	*160SLGK095* 160VXLGK095		*160PXBK095*	
				072	18	7	*180ATMZ095*			*180SLBK095*	180PXBK095	
				072	18	8			*180SLGK095* 180VXLGK095			
				078	20	8	200ATMK095	200RNBK095	*200SLGK095* 200VXLGK095		200PXBK095	
	.058	**ControlCut** 21BPX	**PowerCut** 21LPX	056	13	7				*138SLBK095* 138PXLBK095		
				064	15	8		158RNBK095	158VXLGK095	158PXLBK095		
				066	16	7		168RNBK095	168VXLGK095	*168SLBK095* 168PXLBK095	168SFGK095 168PXBK095	
				072	18	8		188RNBK095	*188SLGK095* 188VXLGK095	188PXLBK095	188SFGK095 188PXBK095	
				078	20	7		208RNBK095	*208SLGK095* 208VXLGK095		208PXBK095	
Narrow Kerf												
.325	.050	*95VPX*	**SpeedCut** 95TXL	056	13	7			*130MPBK095* 130TXLBK095		130MLBK095	
				064	15	7			150TXLBK095		150MLBK095	
				066	16	7			*160MPBK095* 160TXLBK095		160MLBK095	
				072	18	7			180TXLBK095		180MLBK095	
				078	20	7			200TXLBK095			
515, 970, 1072, 1073, FarmLite, P-11, P-20, P-25												
3/8	.050	**AdvanceCut** 72V	**PowerCut** 72EXL, LGX, LPX **VersaCut** 72DPX	060	16	7						
				072	20	7						
	.058	**AdvanceCut** 73V	**PowerCut** 73EXL, LGX, LPX **VersaCut** 73DPX	060	16	7						
				068	18	7						
				072	20	7						
				084	24	7						

▲ See our guides for chainsaws with a **green triangle** on pages FOR 2–3

▲ See our guides for chainsaws with a **yellow triangle** on pages FOR 2–3

Saw chain complies with low kickback performance requirements (FOR 2–3)

Saw chain does not comply with low kickback performance requirements (FOR 2–3)

For information on our PowerSharp Kits see pages FOR 136–137

For Bar & Chain Combos see pages FOR 100–101

Part numbers printed in *red italics* have been obsoleted. Contact your authorized Oregon distributor for availability.

Guide Bar & Saw Chain Applications

Saw Chain				Guide Bars										
							DuraCut™	PowerCut™	SpeedCut™	VersaCut™	ControlCut™	AdvanceCut™	Single Rivet
							AT	RN RW GN PM	TXL	VXL	PXL	SF SX PX GD MLB	SD DG MLE
Pitch	Gauge	Chain Type	Drive Links	Bar Length	Drive Teeth	Armor Tip	PowerMatch®	Pro-Lite®				Pro-Am®	DoubleGuard®
								MG MP	SLG SLH GL GP SP		SLB		
Pioneer													
FarmSaw, FarmSaw II, P-38, P-39, P-41, P-42, P-45, P-50, P-51, P-52, P-60, P-61, P-62, P-285													
3/8	.050	AdvanceCut 72V	PowerCut 72EXL, LGX, LPX VersaCut 72DPX	060	16	7							
				072	20	7							
	.058	AdvanceCut 73V	PowerCut 73EXL, LGX, LPX VersaCut 73DPX	060	16	7							
				068	18	7							
				072	20	7							
				084	24	7							
	.063	AdvanceCut 75V	PowerCut 75EXL, LGX, LPX VersaCut 75DPX	110	32	7							
				119	36	7							
Poulan / Poulan Pro													
Pole Saws†: 446T, PP258TP, PP258TPC, PP338PT, PP445, PP5000P (Attachment), PR28PS													
3/8 low profile	.043	AdvanceCut 90PX		034	8	5							084MLEA041
				040	10	5							
ES 300 (Electric), ES 350													
3/8 low profile	.043	AdvanceCut 90PX		034	8	5							084MLEA041
				040	10	6							
				056	16	6							164MLEA041
25A, 180, 190, 200, 205, 210, 220, 221, 222, 225, 230, 235, 236, 240, 250, 255, 260, 262, 400E, 1220, 1630, 1634, 1800, 1838, 1900, 1900LE, 1950, 1950LE, 1975, 1975LE, 2000, 2025, 2050, 2055, 2055LE, 2075, 2075C, 2150, 2155, 2160, 2175, 2250, 2250LE, 2300, 2350, 2375, 2375LE, 2450, 2550, 2550LE, 2555, 3314, 3314 WS, 3314 WSA, 3416, 3516, 3516 PR, 3516AVX, 3816, 3816AV, 3818, 4018, 4018WT, 4218, 4218A, 4218AV, 4218AVX, E14E, E16E, ES350, ES400, Micro 25 (XX Series and XXV Series), S23, S25, S25AV, S25CVA, S25D, S25DA, S35 (After conversion from 1/4" to 3/8" pitch); Electric Models: 1420, 1425, 1625, 2100, 2400, 2500, 2600, Electric Pro 400E, Patriot 1900, PP3516AVX, Wildthing, Woodshark; Some saws may take .325" pitch chain, see other applications.													**PowerSharp® Compatible**
3/8 low profile	.050	ControlCut 91PXL AdvanceCut 91PX	VersaCut 91VXL	040	10	6							100SDEA041
				045	12	6				*120GPEA041* *120SPEA041*		120SXEA041	120SDEA041
				052	14	6						140SXEA041	140SDEA041
				056	16	6				*160GPEA041*		160SXEA041	160SDEA041
				058	16	6							
				062	18	6							180SDEA041
	Intenz® **												
	.050	ControlCut 91PXL AdvanceCut 91PX	VersaCut 91VXL	045	12	6				*120SPET041*			
				052	14	6				*140SPET041*			140SDET041 140SDET041
				056	16	6				*160GPET041* *160SPET041*			160SDET041
				062	18	6							180SDET041
	.043	AdvanceCut 90PX		040	10	6							
				045	12	6							124MLEA041
				052	14	6							144MLEA041

See page FOR 142 for saw chain sharpening tools

* See page FOR 4 for important information on Guard Mate bar-nose tip guards

** See page FOR 4 for important information on Intenz guide bars.

† ANSI B175.1-2012 and CSA Standard Z62.3 regarding reduced kickback does not apply to pole saws or pruners

For the most current fit-up information visit **OregonProducts.com**

Guide Bar & Saw Chain Applications

Saw Chain				Guide Bars									
						DuraCut™ AT	PowerCut™ RN RW GN PM	SpeedCut™ TXL	VersaCut™ VXL	ControlCut™ PXL	AdvanceCut™ SF SX PX GD MLB	Single Rivet SD DG MLE
Pitch	Gauge	Chain Type	Drive Links	Bar Length	Drive Teeth	Armor Tip	PowerMatch®	Pro-Lite® MG MP	Pro-Lite® SLG SLH GL GP SP	Pro-Lite® SLB	Pro-Am®	DoubleGuard®

Poulan / Poulan Pro

Pitch	Gauge	Chain Type	Drive Links	Bar Length	Drive Teeth	Armor Tip	PowerMatch®	Pro-Lite® MG MP	Pro-Lite® SLG SLH GL GP SP	Pro-Lite® SLB	Pro-Am®	DoubleGuard®
Micro 25PS												
3/8 low profile	.050	**ControlCut** 91PXL **AdvanceCut** 91PX	**VersaCut** 91VXL	052	14	6						140SDEA041
PLN1510												
3/8 low profile	.050	**ControlCut** 91PXL **AdvanceCut** 91PX	**VersaCut** 91VXL	039	10	6						
PLN1514												
3/8 low profile	.050	**ControlCut** 91PXL **AdvanceCut** 91PX	**VersaCut** 91VXL	049	14	6						140SDEA318
PLN3516F												
3/8 low profile	.050	**ControlCut** 91PXL **AdvanceCut** 91PX	**VersaCut** 91VXL	055	16	6			*160SPEA318*			160SDEA318
285, 295, 305, 306SA, 310, 315, 335 Predator, 336, 2700, 2750, 2775, 2800, 2900 Farm Hand, 3000, 3050, 3100, 3300, 4600, 4620, 4620AV, 4620AVX; Some saws may take 3/8" pitch chain, see other applications.												
	.050	**ControlCut** 20BPX	**PowerCut** 20LPX	056	13	8						
				066	16	7		160RNBK041		*160GLGK041*		160PXBK041
				072	18	7		180RNBK041		180VXLGK041 *180GLGK041*		180PXBK041
				078	20	7				*200GLGK041*		200PXBK041
	Intenz® **											
.325	.050	**ControlCut** 20BPX	**PowerCut** 20LPX	066	16	7						*160PXBT041*
				072	18	7						*180PXBT041*
				078	20	7						200PXBT041
	Narrow Kerf											
	.050	*95VPX*	**SpeedCut** 95TXL	056	13	7						130MLBK041
				064	15	7						150MLBK041
				066	16	7			160TXLGK041			160MLBK041
				072	18	7			180TXLGK041			180MLBK041
325...												
.325	.050	**ControlCut** 20BPX	**PowerCut** 20LPX	066	16	7	*160ATMZ095*	160RNBK095		160SLGK095 160VXLGK095		*160PXBK095*
				072	18	7	*180ATMZ095*			*180SLBK095*		180PXBK095
				072	18	8				*180SLGK095* 180VXLGK095		
				078	20	8	200ATMZ095	200RNBK095		*200SLGK095* 200VXLGK095		200PXBK095

See our guides for chainsaws with a **green triangle** on pages FOR 2–3

See our guides for chainsaws with a **yellow triangle** on pages FOR 2–3

Saw chain complies with low kickback performance requirements (FOR 2–3)

Saw chain does not comply with low kickback performance requirements (FOR 2–3)

For information on our PowerSharp Kits see pages FOR 136–137

For Bar & Chain Combos see pages FOR 100–101

Part numbers printed in *red italics* have been obsoleted. Contact your authorized Oregon distributor for availability.

Guide Bar & Saw Chain Applications

Saw Chain				Guide Bars									
						DuraCut™ AT	PowerCut™ RN RW GN PM	SpeedCut™ TXL	VersaCut™ VXL	ControlCut™ PXL	AdvanceCut™ SF SX PX GD MLB	Single Rivet SD DG MLE
Pitch	Gauge	Chain Type	Drive Links	Bar Length	Drive Teeth	Armor Tip	PowerMatch®	Pro-Lite® MG MP	Pro-Lite® SLG SLH GL GP SP	Pro-Lite® SLB	Pro-Am®	DoubleGuard®

Poulan / Poulan Pro

Pitch	Gauge	Chain Type		Drive Links	Bar Length	Drive Teeth	Armor Tip	PowerMatch®	Pro-Lite® MG MP	Pro-Lite® SLG SLH GL GP SP	Pro-Lite® SLB	Pro-Am®	DoubleGuard®
...325													
.325	.058	**ControlCut** 21BPX	**PowerCut** 21LPX	056	13	7					*138SLBK095* 138PXLBK095		
				064	15	8		158RNBK095		158VXLGK095	158PXLBK095		
				066	16	7		168RNBK095		168VXLGK095	*168SLBK095* 168PXLBK095	168SFGK095 168PXBK095	
				072	18	8		188RNBK095		*188SLGK095* 188VXLGK095	188PXLBK095	188SFGK095 188PXBK095	
				078	20	7		208RNBK095		*208SLGK095* 208VXLGK095		208PXBK095 208SFGK095	
Narrow Kerf													
.325	.050	*95VPX*	**SpeedCut** 95TXL	056	13	7			*130MPBK095* 130TXLBK095			130MLBK095	
				064	15	7			150TXLBK095			150MLBK095	
				066	16	7			*160MPBK095* 160TXLBK095			160MLBK095	
				072	18	7			180TXLBK095			180MLBK095	
				078	20	7			200TXLBK095				
203, 245, 306, 306A, 360, 361, 375, 385, 400, 446, 450, 3400, 3700, 3800													
3/8	.050	**AdvanceCut** 72V	**PowerCut** 72EXL, LGX, LPX **VersaCut** 72DPX	060	16	7	*160ATMD176*	160RNDD176		160VXLHD176 *160GLHD176*		160PXDD176	
				064	18	7				180VXLHD176			
				066	18	7		180RNDD176				180PXDD176	
				070	20	7	200ATMD176	200RNDD176		200VXLHD176 *200GLHD176*		200PXDD176	
				081	24	7		240RNDD176					
				084	24	7	240ATMD176						
				092	28	7		280RNDD176					
330, 365, 380, 3350, 3450, 3500, 3600, 3650, 3750													
3/8	.050	**AdvanceCut** 72V	**PowerCut** 72EXL, LGX, LPX **VersaCut** 72DPX	060	16	7							
				066	18	7							
				070	20	7			*200SLDK041*			200PXDK041	
				076	22	7							
				084	24	7							
PP4818													
3/8	.050	**AdvanceCut** 72V	**PowerCut** 72EXL, LGX, LPX **VersaCut** 72DPX	066	20	7	Original Equipment Guide Bar						
				068	20	7	180ATMK095	180RNDK095		*180SLHK095* 180VXLHK095		180SFHK095	

See page FOR 142 for saw chain sharpening tools

* See page FOR 4 for important information on Guard Mate bar-nose tip guards

** See page FOR 4 for important information on Intenz guide bars.

† ANSI B175.1-2012 and CSA Standard Z62.3 regarding reduced kickback does not apply to pole saws or pruners

For the most current fit-up information visit **OregonProducts.com**

Guide Bar & Saw Chain Applications

Saw Chain				Guide Bars									
						DuraCut™ AT	PowerCut™ RN RW GN PM	SpeedCut™ TXL	VersaCut™ VXL	ControlCut™ PXL	AdvanceCut™ SF SX PX GD MLB	Single Rivet SD DG MLE
Pitch	Gauge	Chain Type	Drive Links	Bar Length	Drive Teeth	Armor Tip	PowerMatch®	Pro-Lite® MG MP	Pro-Lite® SLG SLH GL GP SP	Pro-Lite® SLB	Pro-Am®	DoubleGuard®

Poulan / Poulan Pro

PP5020AV, PR5020

Pitch	Gauge	Chain Type	Drive Links	Bar Length	Drive Teeth	Armor Tip	PowerMatch®	Pro-Lite® MG MP	Pro-Lite® SLG SLH GL GP SP	Pro-Lite® SLB	Pro-Am®	DoubleGuard®
3/8	.050	**AdvanceCut** 72V; **PowerCut** 72EXL, LGX, LPX **VersaCut** 72DPX	070	20	7	Original Equipment Guide Bar						
			072	20	7	200ATMK095	200RNDK095		200VXLHK095		200SFHK095	

Poulan / Poulan Pro

395, 3900, 4000, 4200, 4400, 4900, 5200, 5400, 5500, 6700

Pitch	Gauge	Chain Type	Drive Links	Bar Length	Drive Teeth	Armor Tip	PowerMatch®	Pro-Lite® MG MP	Pro-Lite® SLG SLH GL GP SP	Pro-Lite® SLB	Pro-Am®	DoubleGuard®
3/8	.050	**AdvanceCut** 72V; **PowerCut** 72EXL, LGX, LPX **VersaCut** 72DPX	060	16	7	*160ATMD176*	160RNDD176		160VXLHD176 *160GLHD176*		160PXDD176	
			064	18	7				180VXLHD176			
			066	18	7		180RNDD176				180PXDD176	
			070	20	7	200ATMD176	200RNDD176		200VXLHD176 *200GLHD176*		200PXDD176	
			081	24	7		240RNDD176					
			084	24	7	240ATMD176						
			093	27	7							
			092	28	7		280RNDD176					
			105	32	7							

6900, 7700, 8500; Some saws may take .404" pitch chain, see other applications.

Pitch	Gauge	Chain Type	Drive Links	Bar Length	Drive Teeth	Armor Tip	PowerMatch®	Pro-Lite® MG MP	Pro-Lite® SLG SLH GL GP SP	Pro-Lite® SLB	Pro-Am®	DoubleGuard®
3/8	.050	**AdvanceCut** 72V; **PowerCut** 72EXL, LGX, LPX **VersaCut** 72DPX	060	16	7		*160RNDD196*				160GDDD096	
			064	18	8							
			066	18	7							
			070	20	7		*200GNDD196* 200RNDD196				200GDDD096	
			081	24	7		240RNDD196					
			093	27	7		*270GNDD196*					
	.058	**AdvanceCut** 73V; **PowerCut** 73EXL, LGX, LPX **VersaCut** 73DPX	070	20	7							
	.063	**AdvanceCut** 75V; **PowerCut** 75EXL, LGX, LPX **VersaCut** 75DPX	079	21	7	213ATMD196						
			105	32	7							
			117	36	7							

See our guides for chainsaws with a **green triangle** on pages FOR 2–3

See our guides for chainsaws with a **yellow triangle** on pages FOR 2–3

Saw chain complies with low kickback performance requirements (FOR 2–3)

Saw chain does not comply with low kickback performance requirements (FOR 2–3)

For information on our PowerSharp Kits see pages FOR 136–137

For Bar & Chain Combos see pages FOR 100–101

Part numbers printed in *red italics* have been obsoleted. Contact your authorized Oregon distributor for availability.

Guide Bar & Saw Chain Applications

Saw Chain				Guide Bars										
						DuraCut™ AT	PowerCut™ RN RW GN PM	SpeedCut™ TXL	VersaCut™ VXL	ControlCut™ PXL	AdvanceCut™ SF SX PX GD MLB	Single Rivet SD DG MLE		
Pitch	Gauge	Chain Type	Drive Links	Bar Length	Drive Teeth	Armor Tip	PowerMatch®	Pro-Lite® MG MP	Pro-Lite® SLG SLH GL GP SP	Pro-Lite® SLB	Pro-Am®	DoubleGuard®		

Poulan / Poulan Pro

405, 455, 525, 655

3/8	.050	**AdvanceCut** 72V	**PowerCut** 72EXL, LGX, LPX **VersaCut** 72DPX	060	16	7								
				066	18	7								
				072	20	7								
				084	24	7								
	.058	**AdvanceCut** 73V	**PowerCut** 73EXL, LGX, LPX **VersaCut** 73DPX	060	16	7								
				068	18	7								
				072	20	7								
				084	24	7								
	.063	**AdvanceCut** 75V	**PowerCut** 75EXL, LGX, LPX **VersaCut** 75DPX	110	32	7								
				119	36	7								

415, 425, 445, 475, 505; Some saws may take .404" pitch chain, see other applications...

3/8	.050	**AdvanceCut** 72V	**PowerCut** 72EXL, LGX, LPX **VersaCut** 72DPX	060	16	8		160RNDD009		160VXLHD009				
				068	18	8	*180ATMD009*	180RNDD009		*180SLHD009* 180VXLHD009				
				072	20	8	200ATMD009	200RNDD009		200VXLHD009		200SFHD009		
				076	22	7								
				084	24	8	240ATMD009	240RNDD009				240SFHD009		
				093	28	7		280RNDD009 280RWDD009						
				098	30	7		300RNDD009						
				105	32	7		320RNDD009 320RWDD009						
	.058	**AdvanceCut** 73V	**PowerCut** 73EXL, LGX, LPX **VersaCut** 73DPX	052	13	8		138RNDD009		*138SLHD009*				
				056	15	8				158VXLHD009				
				060	16	8	168ATMD009	168RNDD009		168VXLHD009		168SFHD009		
				068	18	8	188ATMD009	188RNDD009		188VXLHD009		188SFHD009		
				072	20	8	208ATMD009	208RNDD009		*208SLHD009* 208VXLHD009		208SFHD009		
				076	22	7		228RNDD009						
				084	24	7	248ATMD009	248RNDD009				248SFHD009		
				089	26	8		268RNDD009						
				092	28	7	288ATMD009	288RNDD009						
				102	30	8		308RNDD009						
				110	33	7		338RWDD009 338PMDD009						
				119	37	7		378RWDD009 378PMDD009						

See page FOR 142 for saw chain sharpening tools

* See page FOR 4 for important information on Guard Mate bar-nose tip guards

** See page FOR 4 for important information on Intenz guide bars.

† ANSI B175.1-2012 and CSA Standard Z62.3 regarding reduced kickback does not apply to pole saws or pruners

For the most current fit-up information visit **OregonProducts.com**

Guide Bar & Saw Chain Applications

Saw Chain				Guide Bars								
						DuraCut™ AT	PowerCut™ RN RW GN PM	SpeedCut™ TXL	VersaCut™ VXL	ControlCut™ PXL	AdvanceCut™ SF SX PX GD MLB	Single Rivet SD DG MLE
Pitch	Gauge	Chain Type	Drive Links	Bar Length	Drive Teeth	Armor Tip	PowerMatch®	Pro-Lite® MG MP	Pro-Lite® SLG SLH GL GP SP	Pro-Lite® SLB	Pro-Am®	DoubleGuard®

Poulan / Poulan Pro

...415, 425, 445, 475, 505; Some saws may take .404" pitch chain, see other applications

	.063	**AdvanceCut** 75V	**PowerCut** 75EXL, LGX, LPX **VersaCut** 75DPX	072	20	7	203ATMD009	203RNDD009					
				084	24	7	243ATMD009	243RNDD009					
				093	28	7		283RNDD009 283RWDD009					
				098	30	7							
				105	32	7		323RNDD009 323RWDD009					
				110	34	7		343RNDD009					
				115	36	7		363RWDD009 363RNDD009					
				119	37	7							
				135	42	7		423RNDD009					
.404	.058		**PowerCut** *58L*	084	28	7							
				104	33	7							
	.063		**PowerCut** 59L, 68LX **VersaCut** 27X	095	32	7							
				104	36	7		363RNFD009					

6900, 7700, 8500; Some saws may take 3/8" pitch chain, see other applications.

.404	.063		**PowerCut** 59L, 68LX **VersaCut** 27X	106	36	7							

Power Pruner / Echo Power Pruner†

PP300, PP400, PP600, PP800, PP1200, PP1250, PP1260, PP1400, PP1400-D, PPF-210, PPF-211, PPF-225, PPF-2100, PPF-2400, PPSR-2122, PPSR-2433, PPT-230, PPT-231, PPT-260, PPT-261, PPT-2100, PPT-2400

	.050	**ControlCut** 91PXL **AdvanceCut** 91PX	**VersaCut** 91VXL	034	8	6							
				039	10	6							100SDEA218
				044	12	6							120SDEA218
	Intenz® **												
3/8 low profile	.050	**ControlCut** 91PXL **AdvanceCut** 91PX	**VersaCut** 91VXL	044	12	6							120SDET218
	.043	**AdvanceCut** 90PX		039	10	6							104MLEA218
				044	12	6							124MLEA218

See our guides for chainsaws with a **green triangle** on pages FOR 2–3

See our guides for chainsaws with a **yellow triangle** on pages FOR 2–3

Saw chain complies with low kickback performance requirements (FOR 2–3)

Saw chain does not comply with low kickback performance requirements (FOR 2–3)

For information on our PowerSharp Kits see pages FOR 136–137

For Bar & Chain Combos see pages FOR 100–101

Part numbers printed in *red italics* have been obsoleted. Contact your authorized Oregon distributor for availability.

Guide Bar & Saw Chain Applications

Saw Chain				Guide Bars									
						DuraCut™ AT	PowerCut™ RN RW GN PM	SpeedCut™ TXL	VersaCut™ VXL	ControlCut™ PXL	AdvanceCut™ SF SX PX GD MLB	Single Rivet SD DG MLE
Pitch	Gauge	Chain Type	Drive Links	Bar Length	Drive Teeth	Armor Tip	PowerMatch®	Pro-Lite® MG MP	Pro-Lite® SLG SLH GL GP SP	Pro-Lite® SLB	Pro-Am®	DoubleGuard®

Power Pruner / Echo Power Pruner†

PPF-280, PPT-280, PPT-265, PPT-265H, PPT-265S — PowerSharp® Compatible

Pitch	Gauge	Chain Type		Drive Links	Bar Length	Drive Teeth	Armor Tip	PowerMatch®	Pro-Lite® MG MP	Pro-Lite® SLG SLH GL GP SP	Pro-Lite® SLB	Pro-Am®	DoubleGuard®
	.050	**ControlCut** 91PXL **AdvanceCut** 91PX	**VersaCut** 91VXL	039	10	6	Original Equipment Guide Bar						
				040	10	6							100sdea041
				044	12	6	Original Equipment Guide Bar						
				045	12	6				*120GPEA041*		120SXEA041	120DGEA041
				049	14	6	Original Equipment Guide Bar						
				052	14	6						140SXEA041	140DGEA041
	Intenz **												
3/8 low profile	.050	**ControlCut** 91PXL **AdvanceCut** 91PX	**VersaCut** 91VXL	045	12	6							120DGET041
				052	14	6							140DGET041
	.043	**AdvanceCut** 90PX		039	10	6	Original Equipment Guide Bar						
				040	10	6							
				044	12	6	Original Equipment Guide Bar						
				045	12	6							124MLEA041
				049	14	6	Original Equipment Guide Bar						
				052	14	6							144MLEA041

Powerhorse

190500, 190501, 190555

Pitch	Gauge	Chain Type		Drive Links	Bar Length	Drive Teeth	Armor Tip	PowerMatch®	Pro-Lite® MG MP	Pro-Lite® SLG SLH GL GP SP	Pro-Lite® SLB	Pro-Am®	DoubleGuard®
3/8 low profile	.050	**ControlCut** 91PXL **AdvanceCut** 91PX	**VersaCut** 91VXL	052	14							140SXEA041	140SDEA041
				056	16							160SXEA041	160SDEA041

190502, 190503, 190557, 190559

Pitch	Gauge	Chain Type		Drive Links	Bar Length	Drive Teeth	Armor Tip	PowerMatch®	Pro-Lite® MG MP	Pro-Lite® SLG SLH GL GP SP	Pro-Lite® SLB	Pro-Am®	DoubleGuard®
	.050	**ControlCut** 20BPX	**PowerCut** 20LPX	072	18							180PXBK095	
				078	20							200PXBK095	
.325	.058	**ControlCut** 21BPX	**PowerCut** 21LPX	072	18	8		188RNBK095		*188SLGK095* 188VXLGK095	188PXLBK095	188SFGK095 188PXBK095	
				078	20	7		208RNBK095		*208SLGK095* 208VXLGK095		208PXBK095	

Redmax (Komatsu Zenoah America, Inc.)

G390, G450AVS, G455AVS, G5000, G5000AVS, G5300, GZ381, GZ500, GZ4350, GZ5000...

Pitch	Gauge	Chain Type		Drive Links	Bar Length	Drive Teeth	Armor Tip	PowerMatch®	Pro-Lite® MG MP	Pro-Lite® SLG SLH GL GP SP	Pro-Lite® SLB	Pro-Am®	DoubleGuard®
.325	.050	**ControlCut** 20BPX	**PowerCut** 20LPX	066	16	7	*160ATMZ095*	160RNBK095		*160SLGK095* 160VXLGK095		*160PXBK095*	
				072	18	7	*180ATMZ095*				*180SLBK095*	180PXBK095	
				072	18	8				*180SLGK095* 180VXLGK095			
				078	20	8	200ATMZ095	200RNBK095		*200SLGK095* 200VXLGK095		200PXBK095	

See page FOR 142 for saw chain sharpening tools

* See page FOR 4 for important information on Guard Mate bar-nose tip guards

** See page FOR 4 for important information on Intenz guide bars.

† ANSI B175.1-2012 and CSA Standard Z62.3 regarding reduced kickback does not apply to pole saws or pruners

For the most current fit-up information visit **OregonProducts.com**

Guide Bar & Saw Chain Applications

Saw Chain | **Guide Bars**

Pitch	Gauge	Chain Type	Drive Links	Bar Length	Drive Teeth	DuraCut™ AT Armor Tip	PowerCut™ RN RW GN PM PowerMatch®	SpeedCut™ TXL MG MP Pro-Lite®	VersaCut™ VXL SLG SLH GL GP SP Pro-Lite®	ControlCut™ PXL SLB Pro-Lite®	AdvanceCut™ SF SX PX GD MLB Pro-Am®	Single Rivet SD DG MLE DoubleGuard®
Redmax (Komatsu Zenoah America, Inc.) ▲												
...G390, G450AVS, G455AVS, G5000, G5000AVS, G5300, GZ381, GZ500, GZ4350, GZ5000												
.325	.058	**ControlCut** 21BPX	**PowerCut** 21LPX	056	13	7				*138SLBK095* 138PXLBK095		
				064	15	8		158RNBK095		158VXLGK095	158PXLBK095	
				066	16	7		168RNBK095		168VXLGK095	*168SLBK095* 168PXLBK095	168SFGK095 168PXBK095
				072	18	8		188RNBK095		*188SLGK095* 188VXLGK095	188PXLBK095	188SFGK095 188PXBK095
				078	20	7		208RNBK095		*208SLGK095* 208VXLGK095		208PXBK095 208SFGK095
	Narrow Kerf											
	.050	*95VPX*	**SpeedCut** 95TXL	056	13	7			*130MPBK095* 130TXLBK095			130MLBK095
				064	15	7			150TXLBK095			150MLBK095
				066	16	7			*160MPBK095* 160TXLBK095			160MLBK095
				072	18	7			180TXLBK095			180MLBK095
				078	20	7			200TXLBK095			
GZ550												
3/8	.050	**AdvanceCut** 72V	**PowerCut** 72EXL, LGX, LPX **VersaCut** 72DPX	068	18	7		180RNDK095		180VXLHK095		180SFHK095
				072	20	7	200ATMK095	200RNDK095		200VXLHK095		200SFHK095
	.058	**AdvanceCut** 73V	**PowerCut** 73EXL, LGX, LPX **VersaCut** 73DPX	068	18	7	188ATMK095	188RNDK095				188SFHK095
				072	20	7	208ATMK095	208RNDK095		208VXLHK095		208SFHK095
G561AVS												
.325	.050	**ControlCut** 20BPX	**PowerCut** 20LPX	068	16	7						
				074	18	7						
				079	20	7						
				091	24	7						
GZ360												
3/8 low profile	.050	**ControlCut** 91PXL **AdvanceCut** 91PX	**VersaCut** 91VXL	052	14	6						140SXEA095	140SDEA095
				056	16	6						160SXEA095	160SDEA095
GZ4500												
Narrow Kerf												
.325	.050	*95VPX*	**SpeedCut** 95TXL	066	16	7			160TXLGK041			160MLBK041
				072	18	7			180TXLGK041			180MLBK041

▲ See our guides for chainsaws with a **green triangle** on pages FOR 2–3

▲ See our guides for chainsaws with a **yellow triangle** on pages FOR 2–3

Saw chain complies with low kickback performance requirements (FOR 2–3)

Saw chain does not comply with low kickback performance requirements (FOR 2–3)

For information on our PowerSharp Kits see pages FOR 136–137

For Bar & Chain Combos see pages FOR 100–101

Part numbers printed in *red italics* have been obsoleted. Contact your authorized Oregon distributor for availability.

Guide Bar & Saw Chain Applications

Saw Chain				Guide Bars									
						DuraCut™ AT	PowerCut™ RN RW GN PM	SpeedCut™ TXL	VersaCut™ VXL	ControlCut™ PXL	AdvanceCut™ SF SX PX GD MLB	Single Rivet SD DG MLE
Pitch	Gauge	Chain Type	Drive Links	Bar Length	Drive Teeth	Armor Tip	PowerMatch®	Pro-Lite® MG MP	Pro-Lite® SLG SLH GL GP SP	Pro-Lite® SLB	Pro-Am®	DoubleGuard®

Redmax (Komatsu Zenoah America, Inc.)

G250, G300AVS, G300TS, G2500, G2500TS, G3100TS, G3200EZ, G3300EZ, G3800, G3800AVS, GZ380, GZ400, GZ3500T, GZ4000 — PowerSharp® Compatible

Pitch	Gauge	Chain Type	Chain Type	Drive Links	Bar Length	Drive Teeth	Armor Tip	PowerMatch®	Pro-Lite® MG MP	Pro-Lite® SLG SLH GL GP SP	Pro-Lite® SLB	Pro-Am®	DoubleGuard®
	.050	ControlCut 91PXL AdvanceCut 91PX	VersaCut 91VXL	045	12	6				*120SPEA041*		120SXEA041	120SDEA041
				052	14	6						140SXEA041	140SDEA041
				056	16	6						160SXEA041	160SDEA041
				062	18	6							180SDEA041
	Intenz® **												
3/8 low profile	.050	ControlCut 91PXL AdvanceCut 91PX	VersaCut 91VXL	045	12	6				*120SPET041*			
				052	14	6				*140SPET041*			140SDET041
				056	16	6				*160SPET041*			160SDET041
				062	18	6							180SDET041
	.043	AdvanceCut 90PX		045	12	6							124MLEA041
				052	14	6							144MLEA041
				056	16	6							164MLEA041
G621AVS													
3/8	.050	AdvanceCut 72V	PowerCut 72EXL, LGX, LPX VersaCut 72DPX	060	16	7	*160ATMD176*	160RNDD176		*160GLHD176*		160PXDD176	
				064	18	7				180VXLHD176			
				066	18	7		180RNDD176				180PXDD176	
				070	20	7	200ATMD176	200RNDD176		*200GLHD176*		200PXDD176	
				081	24	7		240RNDD176					
				092	28	7		280RNDD176					
GZ7000													
3/8	.050	AdvanceCut 72V	PowerCut 72EXL, LGX, LPX VersaCut 72DPX	068	18	8	*180ATMD009*	180RNDD009		*180SLHD009* 180VXLHD009			
				072	20	8	200ATMD009	200RNDD009		200VXLHD009		200SFHD009	
				076	22	7							
				084	24	8	240ATMD009	240RNDD009				240SFHD009	
				093	28	7		280RNDD009 280RWDD009					
Pole Saw Models: PRO GZ25N, PSZ 2500S													
3/8 low profile	.043	AdvanceCut 90PX		044	12	6							124MLEA218
PSZ2401, PSZ2450S, PSZ2460S													
3/8 low profile	.043	AdvanceCut 90PX		044	12	6							
PSZ2465S													
3/8 low profile	.050	ControlCut 91PXL AdvanceCut 91PX	VersaCut 91VXL	044	12	6							

See page FOR 142 for saw chain sharpening tools

* See page FOR 4 for important information on Guard Mate bar-nose tip guards

** See page FOR 4 for important information on Intenz guide bars.

† ANSI B175.1-2012 and CSA Standard Z62.3 regarding reduced kickback does not apply to pole saws or pruners

For the most current fit-up information visit **OregonProducts.com**

Guide Bar & Saw Chain Applications

Saw Chain				Guide Bars									
						DuraCut™ AT	PowerCut™ RN RW GN PM	SpeedCut™ TXL	VersaCut™ VXL	ControlCut™ PXL	AdvanceCut™ SF SX PX GD MLB	Single Rivet SD DG MLE
Pitch	Gauge	Chain Type	Drive Links	Bar Length	Drive Teeth	Armor Tip	PowerMatch®	Pro-Lite® MG MP	Pro-Lite® SLG SLH GL GP SP	Pro-Lite® SLB	Pro-Am®	DoubleGuard®

Remington

100, 500, 812, 814, 816, 840AV, 850AV, 860AV, Job Master, Mighty Mite, Outdoorsman II, Rancher, Weekender, Yardmaster

Pitch	Gauge	Chain Type		Drive Links	Bar Length	Drive Teeth	Armor Tip	PowerMatch®	Pro-Lite® MG MP	Pro-Lite® SLG SLH GL GP SP	Pro-Lite® SLB	Pro-Am®	DoubleGuard®
3/8 low profile	.050	**ControlCut** 91PXL **AdvanceCut** 91PX	**VersaCut** 91VXL	044	12	6							120SDEA318
				049	14	6				*140SPEA318*		140SXEA318	140SDEA318
				054	16	6				*160SPEA318*		160SXEA318	160SDEA318

Electric Models: ES1512US, ES1514AS, ES1514US, RM1215, RM1415A, RM1415U

3/8 low profile	.050	**ControlCut** 91PXL **AdvanceCut** 91PX	**VersaCut** 91VXL	045	12	5							540525
				050	14	5							

RM4214, RM4216, RM4218

3/8 low profile	.050	**ControlCut** 91PXL **AdvanceCut** 91PX	**VersaCut** 91VXL	053	14	6				*140SPEA095*		140SXEA095	140SDEA095
				057	16	6				*160SPEA095*		160SXEA095	160SDEA095
				062	18	6							

Electric Models: 098031J, 099039J, 107624-01, 107624-02, 107625-01, 107625-02, 111174-01, 107714-02, CLD3616AWB, CLD4016W, CLD4018AW, CLD4018AWC, LD3516AWB, LD4016AW, LD4018AW, LD4018WC, RM1632A, RM1635W, RM1640B, RM1640W, RM1645, RM1840W

3/8 low profile	.050	**ControlCut** 91PXL **AdvanceCut** 91PX	**VersaCut** 91VXL	056	16	6							540529
				062	18	6							540531

Pole Saw Models†: 104317, EL-1, RM0815P, RM0818BPS

3/8 low profile	.043	**AdvanceCut** 90PX		034	8	5							

Pole Saw Models†: RM2599

3/8 low profile	.043	**AdvanceCut** 90PX		034	8	5							084MLEA041

M3516AW, M15012US, M15014AS, M15014US, M30016AS, M30016US, M35016AS, M35016AW, M35016US, M35016UW, RM1415M, RM1630A, RM1630U, RM1630W

3/8 low profile	.050	**ControlCut** 91PXL **AdvanceCut** 91PX	**VersaCut** 91VXL	048	12	5							
				052	14	5							540528
				058	16	5							

Pole Saw Models†: 6 Branch Wizard, 11409-01 Branch Wizard, RM0612P

3/8 low profile	.043	**AdvanceCut** 90PX		28	6	5							540522

Pole Saw Models†: 106890-01, 106890-02, 108526-01, PS1510A, RM1015SP, RM1025P, RM1025SPS, Wizard 106821A

3/8 low profile	.050	**ControlCut** 91PXL **AdvanceCut** 91PX	**VersaCut** 91VXL	40	10	5							

See our guides for chainsaws with a **green triangle** on pages FOR 2–3

See our guides for chainsaws with a **yellow triangle** on pages FOR 2–3

Saw chain complies with low kickback performance requirements (FOR 2–3)

Saw chain does not comply with low kickback performance requirements (FOR 2–3)

For information on our PowerSharp Kits see pages FOR 136–137

For Bar & Chain Combos see pages FOR 100–101

Part numbers printed in *red italics* have been obsoleted. Contact your authorized Oregon distributor for availability.

Guide Bar & Saw Chain Applications

Saw Chain				Guide Bars									
		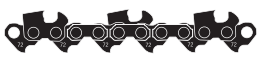				DuraCut™ AT	PowerCut™ RN RW GN PM	SpeedCut™ TXL	VersaCut™ VXL	ControlCut™ PXL	AdvanceCut™ SF SX PX GD MLB	Single Rivet SD DG MLE
Pitch	Gauge	Chain Type	Drive Links	Bar Length	Drive Teeth	Armor Tip	PowerMatch®	Pro-Lite® MG MP	Pro-Lite® SLG SLH GL GP SP	Pro-Lite® SLB	Pro-Am®	DoubleGuard®

Remington

RM4618, RM4620, RM5118, RM5520

Pitch	Gauge	Chain Type		Drive Links	Bar Length	Drive Teeth	Armor Tip	PowerMatch®	Pro-Lite® MG MP	Pro-Lite® SLG SLH GL GP SP	Pro-Lite® SLB	Pro-Am®	DoubleGuard®
.325	.050	**ControlCut** 20BPX	**PowerCut** 20LPX	066	16	7	*160ATMZ095*	160RNBK095		*160SLGK095* 160VXLGK095		*160PXBK095*	
				072	18	7	*180ATMZ095*				*180SLBK095*	180PXBK095	
				072	18	8				*180SLGK095* 180VXLGK095			
				078	20	8	200ATMZ095	200RNBK095		*200SLGK095* 200VXLGK095		200PXBK095	

Logger, PL-4, PL-5, SL-4, SL-9, SL-10, SL-14, SL-16, Woodsman

Pitch	Gauge	Chain Type		Drive Links	Bar Length	Drive Teeth	Armor Tip	PowerMatch®	Pro-Lite® MG MP	Pro-Lite® SLG SLH GL GP SP	Pro-Lite® SLB	Pro-Am®	DoubleGuard®
3/8	.050	**AdvanceCut** 72V	**PowerCut** 72EXL, LGX, LPX **VersaCut** 72DPX	060	16	7		*160RNDD196*		*160GLHD196*		160GDDD096	
				064	18	8							
				066	18	7							
				070	20	7		*200GNDD196* 200RNDD196		*200GLHD196*		200GDDD096	
				081	24	7		240RNDD196					

Remington

PL-55, SL-11

Pitch	Gauge	Chain Type		Drive Links	Bar Length	Drive Teeth	Armor Tip	PowerMatch®	Pro-Lite® MG MP	Pro-Lite® SLG SLH GL GP SP	Pro-Lite® SLB	Pro-Am®	DoubleGuard®
3/8	.050	**AdvanceCut** 72V	**PowerCut** 72EXL, LGX, LPX **VersaCut** 72DPX	060	16	7		*160RNDD196*		*160GLHD196*		160GDDD096	
				064	18	8							
				066	18	7							
				070	20	7		200RNDD196		*200GLHD196*		200GDDD096	
				081	24	7		240RNDD196					

Ryobi

RY10518, RY10519, RY10520, RY10521

Pitch	Gauge	Chain Type		Drive Links	Bar Length	Drive Teeth	Armor Tip	PowerMatch®	Pro-Lite® MG MP	Pro-Lite® SLG SLH GL GP SP	Pro-Lite® SLB	Pro-Am®	DoubleGuard®
.325	.050	**ControlCut** 20BPX	**PowerCut** 20LPX	072	18	7		180RNBK041		180VXLGK041		180PXBK041	
				078	20	7				200VXLGK041		200GDBK041 200PXBK041	

RY10532, ZRRY10532

Pitch	Gauge	Chain Type		Drive Links	Bar Length	Drive Teeth	Armor Tip	PowerMatch®	Pro-Lite® MG MP	Pro-Lite® SLG SLH GL GP SP	Pro-Lite® SLB	Pro-Am®	DoubleGuard®
3/8 low profile	.050	**ControlCut** 91PXL **AdvanceCut** 91PX	**VersaCut** 91VXL	062	18	6							

P4360, RY43160

Pitch	Gauge	Chain Type		Drive Links	Bar Length	Drive Teeth	Armor Tip	PowerMatch®	Pro-Lite® MG MP	Pro-Lite® SLG SLH GL GP SP	Pro-Lite® SLB	Pro-Am®	DoubleGuard®
3/8 low profile	.043	**AdvanceCut** 90PX		033	8								084MLEA041

P540, P540A, P540B, P542, P543, P545, RY52003, RY52003A, TP30 CS1800 18 Volt Cordless

Pitch	Gauge	Chain Type		Drive Links	Bar Length	Drive Teeth	Armor Tip	PowerMatch®	Pro-Lite® MG MP	Pro-Lite® SLG SLH GL GP SP	Pro-Lite® SLB	Pro-Am®	DoubleGuard®
3/8 low profile	.043	**AdvanceCut** 90PX		040	10	6							104MLEA041

See page FOR 142 for saw chain sharpening tools

* See page FOR 4 for important information on Guard Mate bar-nose tip guards

** See page FOR 4 for important information on Intenz guide bars.

† ANSI B175.1-2012 and CSA Standard Z62.3 regarding reduced kickback does not apply to pole saws or pruners

For the most current fit-up information visit **OregonProducts.com**

Guide Bar & Saw Chain Applications

Saw Chain				Guide Bars									
						DuraCut™ AT	PowerCut™ RN RW GN PM	SpeedCut™ TXL	VersaCut™ VXL	ControlCut™ PXL	AdvanceCut™ SF SX PX GD MLB	Single Rivet SD DG MLE
Pitch	Gauge	Chain Type	Drive Links	Bar Length	Drive Teeth	Armor Tip	PowerMatch®	Pro-Lite® MG MP	Pro-Lite® SLG SLH GL GP SP	Pro-Lite® SLB	Pro-Am®	DoubleGuard®

Ryobi

Pitch	Gauge	Chain Type	Drive Links	Bar Length	Drive Teeth	Armor Tip	PowerMatch®	Pro-Lite® MG MP	Pro-Lite® SLG SLH GL GP SP	Pro-Lite® SLB	Pro-Am®	DoubleGuard®
RY40500, RY40510B												
3/8 low profile	.043	**AdvanceCut** 90PX	045	12	6							124MLEA041
RY40502, RY40511												
3/8 low profile	.043	**AdvanceCut** 90PX	052	14	6							144MLEA041
Pole Saws: PP720R, P542												
3/8 low profile	.043	**AdvanceCut** 90PX	034	8	6							
			040	10								

Shindaiwa (SDK)

Pitch	Gauge	Chain Type		Drive Links	Bar Length	Drive Teeth	Armor Tip	PowerMatch®	Pro-Lite® MG MP	Pro-Lite® SLG SLH GL GP SP	Pro-Lite® SLB	Pro-Am®	DoubleGuard®
305s													
3/8 low profile	.050	**ControlCut** 91PXL **AdvanceCut** 91PX	**VersaCut** 91VXL	052	14	6						140SXEA041	140SDEA041
358Ts													
3/8 low profile	.050	**ControlCut** 91PXL **AdvanceCut** 91PX	**VersaCut** 91VXL	052	14	6						140SXEA041,	140SDEA041
				057	16	6						160SXEA041	160SDEA041
340s													
3/8 low profile	.050	**ControlCut** 91PXL **AdvanceCut** 91PX	**VersaCut** 91VXL	057	16							160SXEA041	160SDEA041
402s													
3/8 low profile	.050	**ControlCut** 91PXL **AdvanceCut** 91PX	**VersaCut** 91VXL	062	18	6							180SDEA041

See our guides for chainsaws with a **green triangle** on pages FOR 2–3

See our guides for chainsaws with a **yellow triangle** on pages FOR 2–3

Saw chain complies with low kickback performance requirements (FOR 2–3)

Saw chain does not comply with low kickback performance requirements (FOR 2–3)

For information on our PowerSharp Kits see pages FOR 136–137

For Bar & Chain Combos see pages FOR 100–101

Part numbers printed in *red italics* have been obsoleted. Contact your authorized Oregon distributor for availability.

Guide Bar & Saw Chain Applications

Saw Chain				Guide Bars									
					DuraCut™ AT	PowerCut™ RN RW GN PM	SpeedCut™ TXL	VersaCut™ VXL	ControlCut™ PXL	AdvanceCut™ SF SX PX GD MLB	Single Rivet SD DG MLE
Pitch	Gauge	Chain Type	Drive Links	Bar Length	Drive Teeth	Armor Tip	PowerMatch®	Pro-Lite® MG MP	Pro-Lite® SLG SLH GL GP SP	Pro-Lite® SLB	Pro-Am®	DoubleGuard®

Shindaiwa (SDK)

Pitch	Gauge	Chain Type		Drive Links	Bar Length	Drive Teeth	Armor Tip	PowerMatch®	Pro-Lite® MG MP	Pro-Lite® SLG SLH GL GP SP	Pro-Lite® SLB	Pro-Am®	DoubleGuard®
90, 100, 110, 120, 140, 150 Electric, 160 Electric, 326T												PowerSharp® Compatible	
3/8 low profile	.050	**ControlCut** 91PXL **AdvanceCut** 91PX	**VersaCut** 91VXL	045	12	6				*120SPEA041*		120SXEA041	120SDEA041
				052	14	6						140SXEA041	140SDEA041
				057	16	6						160SXEA041	160SDEA041
				062	18	6							180SDEA041
	Intenz® **												
	.050	**ControlCut** 91PXL **AdvanceCut** 91PX	**VersaCut** 91VXL	045	12	6				*120SPET041*			
				052	14	6				*140SPET041*			140SDET041
				057	16	6				*160SPET041*			160SDET041
				062	18	6							180SDET041
	.043	**AdvanceCut** 90PX		045	12	6							124MLEA041
				052	14	6							144MLEA041
				057	16	6							*164MLEA041*
104P, 180, 345, 350, 352, 352s, 357, 360, E305AV; Some saws may take .325" pitch chain, see other applications.												PowerSharp Compatible	
3/8 low profile	.050	**ControlCut** 91PXL **AdvanceCut** 91PX	**VersaCut** 91VXL	053	14	6						140SXEA041	140SDEA041
				057	16	6						160SXEA041	160SDEA041
				059	16	6							
				063	18	6							180SDEA041
	Intenz **												
	.050	**ControlCut** 91PXL **AdvanceCut** 91PX	**VersaCut** 91VXL	053	14	6				*140SPET041*			140SDET041
				057	16	6				*160SPET041*			160SDET041
				063	18	6							180SDET041
Pole Saw Models†: M242, M254, P230, P231, Pruner Attachment #78701, Pruner Tool #65002													
3/8 low profile	.043	**AdvanceCut** 90PX		033	8	6							
				039	10	6							104MLEA318
				044	12	6							
491s													
.325	.050	**ControlCut** 20BPX	**PowerCut** 20LPX	072	18	7				*180GLGK216*			
				078	20	7				*200GLGK216*			
591													
3/8	.050	**AdvanceCut** 72V	**PowerCut** 72LPX, 72LGX **VersaCut** 72DPX	064	18	7		180RNDD176		180VXLHD176			
				070	20	7		200RNDD176		200VXLHD176			
600sx													
3/8	.050	**AdvanceCut** 72V	**PowerCut** 72LPX, 72LGX **VersaCut** 72DPX	070	20	7		200RNDD176		200VXLHD176			
				081	24	7		240RNDD176					
				093	27	7							

See page FOR 142 for saw chain sharpening tools

* See page FOR 4 for important information on Guard Mate bar-nose tip guards

** See page FOR 4 for important information on Intenz guide bars.

† ANSI B175.1-2012 and CSA Standard Z62.3 regarding reduced kickback does not apply to pole saws or pruners

For the most current fit-up information visit **OregonProducts.com**

Guide Bar & Saw Chain Applications

Saw Chain				Guide Bars									
						DuraCut™ AT	PowerCut™ RN RW GN PM	SpeedCut™ TXL	VersaCut™ VXL	ControlCut™ PXL	AdvanceCut™ SF SX PX GD MLB	Single Rivet SD DG MLE
Pitch	Gauge	Chain Type	Drive Links	Bar Length	Drive Teeth	Armor Tip	PowerMatch®	Pro-Lite® MG MP	Pro-Lite® SLG SLH GL GP SP	Pro-Lite® SLB	Pro-Am®	DoubleGuard®

Shindaiwa (SDK)

360, 366, 377, 415, 446s, 450, 451, 488, 488S, 490, 500, 502s; Some saws may take 3/8" pitch chain, see other applications

Pitch	Gauge	Chain Type		Drive Links	Bar Length	Drive Teeth	Armor Tip	PowerMatch®	Pro-Lite® MG MP	Pro-Lite® SLG SLH GL GP SP	Pro-Lite® SLB	Pro-Am®	DoubleGuard®
	.050	**ControlCut** 20BPX	**PowerCut** 20LPX	056	13	7							
				066	16	7		160RNBK041		160VXLGK041 *160GLGK041*		160PXBK041	
				072	18	7		180RNBK041		180VXLGK041 *180GLGK041*		180PXBK041	
				078	20	7				*200GLGK041*		200PXBK041	
.325	Intenz® **												
	.050	**ControlCut** 20BPX	**PowerCut** 20LPX	066	16	7						*160PXBT041*	
				072	18	7						*180PXBT041*	
				078	20	7						200PXBT041	
	Narrow Kerf												
	.050	*95VPX*	**SpeedCut** 95TXL	056	13	7						130MLBK041	
				064	15	7						150MLBK041	
				066	16	7			160TXLGK041			160MLBK041	
				072	18	7			180TXLGK041			180MLBK041	

550, 575, 577

Pitch	Gauge	Chain Type		Drive Links	Bar Length	Drive Teeth	Armor Tip	PowerMatch®	Pro-Lite® MG MP	Pro-Lite® SLG SLH GL GP SP	Pro-Lite® SLB	Pro-Am®	DoubleGuard®
	.050	**AdvanceCut** 72V	**PowerCut** 72EXL, LGX, LPX **VersaCut** 72DPX	060	16	7		160RNDD009		160VXLHD009			
				068	18	7	*180ATMD009*	180RNDD009		*180SLHD009* 180VXLHD009			
				072	20	7	*200ATMD009*	200RNDD009		200VXLHD009		200SFHD009	
				076	22	7							
				084	24	7	240ATMD009	240RNDD009				240SFHD009	
3/8	.058	**AdvanceCut** 73V	**PowerCut** 73EXL, LGX, LPX **VersaCut** 73DPX	052	13	7		138RNDD009		*138SLHD009*			
				056	15	7				158VXLHD009			
				060	16	7	*168ATMD009*	168RNDD009		168VXLHD009		168SFHD009	
				068	18	7	*188ATMD009*	188RNDD009		188VXLHD009		188SFHD009	
				072	20	7	*208ATMD009*	208RNDD009		*208SLHD009* 208VXLHD009		208SFHD009	
				076	22	7		228RNDD009					
				084	24	7	*248ATMD009*	248RNDD009				248SFHD009	
				089	26	8		268RNDD009					
				092	28	7	288ATMD009	288RNDD009					

See our guides for chainsaws with a **green triangle** on pages FOR 2–3

See our guides for chainsaws with a **yellow triangle** on pages FOR 2–3

Saw chain complies with low kickback performance requirements (FOR 2–3)

Saw chain does not comply with low kickback performance requirements (FOR 2–3)

For information on our PowerSharp Kits see pages FOR 136–137

For Bar & Chain Combos see pages FOR 100–101

Part numbers printed in *red italics* have been obsoleted. Contact your authorized Oregon distributor for availability.

Guide Bar & Saw Chain Applications

Saw Chain						Guide Bars						
						DuraCut™ AT	PowerCut™ RN RW GN PM	SpeedCut™ TXL	VersaCut™ VXL	ControlCut™ PXL	AdvanceCut™ SF SX PX GD MLB	Single Rivet SD DG MLE
Pitch	Gauge	Chain Type	Drive Links	Bar Length	Drive Teeth	Armor Tip	PowerMatch®	Pro-Lite® MG MP	Pro-Lite® SLG SLH GL GP SP	Pro-Lite® SLB	Pro-Am®	DoubleGuard®

Shindaiwa (SDK)

680, 695, 757, 757C, 757W...

Pitch	Gauge	Chain Type		Drive Links	Bar Length	Drive Teeth	Armor Tip	PowerMatch®	Pro-Lite® MG MP	Pro-Lite® SLG SLH GL GP SP	Pro-Lite® SLB	Pro-Am®	DoubleGuard®
3/8	.050	**AdvanceCut** 72V	**PowerCut** 72EXL, LGX, LPX **VersaCut** 72DPX	060	16	7		160RNDD009		160VXLHD009			
				068	18	7	*180ATMD009*	180RNDD009		*180SLHD009* 180VXLHD009			
				072	20	7	*200ATMD009*	200RNDD009		200VXLHD009		200SFHD009	
				076	22	7							
				084	24	7	240ATMD009	240RNDD009				240SFHD009	
				093	28	7		280RNDD009 280RWDD009					
				098	30	7		300RNDD009					
				105	32	7		320RNDD009 320RWDD009					
	.058	**AdvanceCut** 73V	**PowerCut** 73EXL, LGX, LPX **VersaCut** 73DPX	052	13	7		138RNDD009		*138SLHD009*			
				056	15	7				158VXLHD009			
				060	16	7	168ATMD009	168RNDD009		168VXLHD009		168SFHD009	
				068	18	7	188ATMD009	188RNDD009		188VXLHD009		188SFHD009	
				072	20	7	208ATMD009	208RNDD009		*208SLHD009* 208VXLHD009		208SFHD009	
				076	22	7		228RNDD009					
				084	24	7	*248ATMD009*	248RNDD009				248SFHD009	
				089	26	8		268RNDD009					
				093	28	7	288ATMD009	288RNDD009					
				102	30	8		308RNDD009					
				105	32	8		*328RNDD009*					
				110	33	7		338RWDD009 338PMDD009					
				115	36	7		*368RNDD009*					
				119	37	7		378RWDD009 378PMDD009					
	.063	**AdvanceCut** 75V	**PowerCut** 75EXL, LGX, LPX **VersaCut** 75DPX	072	20	7	*203ATMD009*	203RNDD009					
				084	24	7	*243ATMD009*	243RNDD009					
				093	28	7		283RNDD009 283RWDD009					
				098	30	7							
				105	32	7		323RNDD009 323RWDD009					
				110	34	7		343RNDD009					
				115	36	7		363RNDD009 363RWDD009					
				119	37	7							
				135	42	7		423RNDD009					

See page FOR 142 for saw chain sharpening tools

* See page FOR 4 for important information on Guard Mate bar-nose tip guards

** See page FOR 4 for important information on Intenz guide bars.

† ANSI B175.1-2012 and CSA Standard Z62.3 regarding reduced kickback does not apply to pole saws or pruners

For the most current fit-up information visit **OregonProducts.com**

Guide Bar & Saw Chain Applications

Saw Chain | **Guide Bars**

Pitch	Gauge	Chain Type	Drive Links	Bar Length	Drive Teeth	DuraCut™ AT	PowerCut™ RN RW GN PM	SpeedCut™ TXL	VersaCut™ VXL	ControlCut™ PXL	AdvanceCut™ SF SX PX GD MLB	Single Rivet SD DG MLE
						Armor Tip	PowerMatch®	Pro-Lite® MG MP	Pro-Lite® SLG SLH GL GP SP	Pro-Lite® SLB	Pro-Am®	DoubleGuard®

Shindaiwa (SDK)

...680, 695, 757, 757C, 757W

Pitch	Gauge	Chain Type		Drive Links	Bar Length	Drive Teeth	Armor Tip	PowerMatch®	Pro-Lite® MG MP	Pro-Lite® SLG SLH GL GP SP	Pro-Lite® SLB	Pro-Am®	DoubleGuard®
.404	.058		**PowerCut** *58L*	084	28	7							
				104	33	7							
	.063		**PowerCut** 59L, 68LX **VersaCut** 27X	065	20	7							
				095	32	7							
				104	36	7		363RNFD009					

Skil

1620, 1622, 1624, 1631 Type 3, 1634, 1635, 1636

Pitch	Gauge	Chain Type		Drive Links	Bar Length	Drive Teeth	Armor Tip	PowerMatch®	Pro-Lite® MG MP	Pro-Lite® SLG SLH GL GP SP	Pro-Lite® SLB	Pro-Am®	DoubleGuard®
	.050	**ControlCut** 91PXL **AdvanceCut** 91PX	**VersaCut** 91VXL	045	12	6						120SXEA041	120SDEA041
				052	14	6						140SXEA041	140SDEA041
				056	16	6						160SXEA041	160SDEA041
				062	18	6							180SDEA041
	Intenz® **												
3/8 low profile	.050	**ControlCut** 91PXL **AdvanceCut** 91PX	**VersaCut** 91VXL	045	12	6				*120SPET041*			
				052	14	6				*140SPET041*			140SDET041
				056	16	6				*160SPET041*			160SDET041
				062	18	6							180SDET041
	.043	**AdvanceCut** 90PX		045	12	6							124MLEA041
				052	14	6							144MLEA041
				056	16	6							*164MLEA041*

1600, 1601, 1602, 1610, 1611, 1612, 1613, 1614, 1616, 1700, 1705, 1712

Pitch	Gauge	Chain Type		Drive Links	Bar Length	Drive Teeth	Armor Tip	PowerMatch®	Pro-Lite® MG MP	Pro-Lite® SLG SLH GL GP SP	Pro-Lite® SLB	Pro-Am®	DoubleGuard®
3/8 low profile	.050	**ControlCut** 91PXL **AdvanceCut** 91PX	**VersaCut** 91VXL	045	12	6							*120SDEA064*
				052	14	6							*140SDEA064*
				056	16	6				*160SPEA064*			

1637

Pitch	Gauge	Chain Type		Drive Links	Bar Length	Drive Teeth	Armor Tip	PowerMatch®	Pro-Lite® MG MP	Pro-Lite® SLG SLH GL GP SP	Pro-Lite® SLB	Pro-Am®	DoubleGuard®
3/8 low profile	.050	**ControlCut** 91PXL **AdvanceCut** 91PX	**VersaCut** 91VXL	057	16	6							

1641

Pitch	Gauge	Chain Type		Drive Links	Bar Length	Drive Teeth	Armor Tip	PowerMatch®	Pro-Lite® MG MP	Pro-Lite® SLG SLH GL GP SP	Pro-Lite® SLB	Pro-Am®	DoubleGuard®
3/8	.050	**AdvanceCut** 72V	**PowerCut** 72EXL, LGX, LPX **VersaCut** 72DPX	060	16	7	*160ATMD176*	160RNDD176		160VXLHD176		160PXDD176	
				064	18	7				180VXLHD176			
				066	18	7		180RNDD176				180PXDD176	
				070	20	7	*200ATMD176*	200RNDD176		200VXLHD176		200PXDD176	

See our guides for chainsaws with a **green triangle** on pages FOR 2–3

See our guides for chainsaws with a **yellow triangle** on pages FOR 2–3

Saw chain complies with low kickback performance requirements (FOR 2–3)

Saw chain does not comply with low kickback performance requirements (FOR 2–3)

For information on our PowerSharp Kits see pages FOR 136–137

For Bar & Chain Combos see pages FOR 100–101

Part numbers printed in *red italics* have been obsoleted. Contact your authorized Oregon distributor for availability.

Guide Bar & Saw Chain Applications

Saw Chain				Guide Bars									
						DuraCut™ AT	PowerCut™ RN RW GN PM	SpeedCut™ TXL	VersaCut™ VXL	ControlCut™ PXL	AdvanceCut™ SF SX PX GD MLB	Single Rivet SD DG MLE
Pitch	Gauge	Chain Type	Drive Links	Bar Length	Drive Teeth	Armor Tip	PowerMatch®	Pro-Lite® MG MP	Pro-Lite® SLG SLH GL GP SP	Pro-Lite® SLB	Pro-Am®	DoubleGuard®

Snapper

S1634, S1838 — PowerSharp® Compatible

	.050	**AdvanceCut** 91PX	**VersaCut** 91VXL	040	10	6							100SDEA041
				045	12	6				*120SPEA041*		120SXEA041	120SDEA041
				052	14	6						140SXEA041	140SDEA041
				056	16	6						160SXEA041	160SDEA041
				062	18	6							180SDEA041
	Intenz® **												
3/8 low profile	.050	**AdvanceCut** 91PX	**VersaCut** 91VXL	045	12	6				*120SPET041*			
				052	14	6				*140SPET041*			140SDET041
				056	16	6				*160SPET041*			160SDET041
				062	18	6							180SDET041
	.043	**AdvanceCut** 90PX		040	10	6							
				045	12	6							124MLEA041
				052	14	6							144MLEA041

Solo

630, 633, 635, 636, 637, 640, 643 — PowerSharp Compatible

	.050	**ControlCut** 91PXL **AdvanceCut** 91PX	**VersaCut** 91VXL	045	12	6				*120SPEA095*		120SXEA095	120SDEA095
				052	14	6				*140SPEA095*		140SXEA095	140SDEA095
				056	16	6				*160SPEA095*		160SXEA095	160SDEA095
				062	18	6							
	Intenz **												
3/8 low profile	.050	**ControlCut** 91PXL **AdvanceCut** 91PX	**VersaCut** 91VXL	045	12	6							*120SDET095*
				052	14	6				*140SPET095*			140SDET095
				056	16	6				*160SPET095*			*160SDET095*
	.043	**AdvanceCut** 90PX		052	14	6							*144MLEA095* *144MLET095*

See page FOR 142 for saw chain sharpening tools

* See page FOR 4 for important information on Guard Mate bar-nose tip guards

** See page FOR 4 for important information on Intenz guide bars.

† ANSI B175.1-2012 and CSA Standard Z62.3 regarding reduced kickback does not apply to pole saws or pruners

For the most current fit-up information visit **OregonProducts.com**

Guide Bar & Saw Chain Applications

Saw Chain				Guide Bars									
						DuraCut™ AT	PowerCut™ RN RW GN PM	SpeedCut™ TXL	VersaCut™ VXL	ControlCut™ PXL	AdvanceCut™ SF SX PX GD MLB	Single Rivet SD DG MLE
Pitch	Gauge	Chain Type	Drive Links	Bar Length	Drive Teeth	Armor Tip	PowerMatch®	Pro-Lite® MG MP	Pro-Lite® SLG SLH GL GP SP	Pro-Lite® SLB	Pro-Am®	DoubleGuard®

Solo

651, 651SP, 652

Pitch	Gauge	Chain Type		Drive Links	Bar Length	Drive Teeth	Armor Tip	PowerMatch®	Pro-Lite® MG MP	Pro-Lite® SLG SLH GL GP SP	Pro-Lite® SLB	Pro-Am®	DoubleGuard®
.325	.050	**ControlCut** 20BPX	**PowerCut** 20LPX	066	16	7	160ATMK095	160RNBK095		*160SLGK095* 160VXLGK095		*160PXBK095*	
				072	18	7	*180ATMZ095*				*180SLBK095*	180PXBK095	
				072	18	8				*180SLGK095* 180VXLGK095			
				078	20	8	200ATMZ095	200RNBK095		*200SLGK095* 200VXLGK095		200PXBK095	
	.058	**ControlCut** 21BPX	**PowerCut** 21LPX	066	16	7				168VXLGK095		168SFGK095	
				072	18	7				*188SLGK095* 188VXLGK095		188SFGK095	
				078	20	8				*208SLGK095* 208VXLGK095		208PXBK095 208SFGK095	

656, 656SP

Pitch	Gauge	Chain Type		Drive Links	Bar Length	Drive Teeth	Armor Tip	PowerMatch®	Pro-Lite® MG MP	Pro-Lite® SLG SLH GL GP SP	Pro-Lite® SLB	Pro-Am®	DoubleGuard®
	.050	**ControlCut** 20BPX	**PowerCut** 20LPX	066	16	7	*160ATMZ095*	160RNBK095		*160SLGK095* 160VXLGK095		*160PXBK095*	
				072	18	7	*180ATMZ095*				*180SLBK095*	180PXBK095	
				072	18	8				*180SLGK095* 180VXLGK095			
				078	20	7	200ATMZ095	200RNBK095		*200SLGK095* 200VXLGK095		200PXBK095	
.325	.058	**ControlCut** 21BPX	**PowerCut** 21LPX	056	13	7					*138SLBK095* 138PXLBK095		
				064	15	8		158RNBK095		158VXLGK095	158PXLBK095		
				066	16	7		168RNBK095		168VXLGK095	*168SLBK095* 168PXLBK095	168VXLGK095 168PXBK095	
				072	18	8		188RNBK095		*188SLGK095* 188VXLGK095	188PXLBK095	*188SLGK095* 188VXLGK095 188PXBK095	
				078	20	7		208RNBK095		*208SLGK095* 208VXLGK095		208PXBK095	
3/8	.050	**AdvanceCut** 72V	**PowerCut** 72EXL, LGX, LPX **VersaCut** 72DPX	060	16	7	160ATMK095	160RNDK095		160VXLHK095		160SFHK095	
				068	18	7	180ATMK095	180RNDK095		*180SLHK095* 180VXLHK095		180SFHK095	
				072	20	7	200ATMK095	200RNDK095		200VXLHK095		200SFHK095	
				084	24	7		240RNDK095					
				093	28	7		280RNDK095					

See our guides for chainsaws with a **green triangle** on pages FOR 2–3

See our guides for chainsaws with a **yellow triangle** on pages FOR 2–3

Saw chain complies with low kickback performance requirements (FOR 2–3)

Saw chain does not comply with low kickback performance requirements (FOR 2–3)

For information on our PowerSharp Kits see pages FOR 136–137

For Bar & Chain Combos see pages FOR 100–101

Part numbers printed in *red italics* have been obsoleted. Contact your authorized Oregon distributor for availability.

Guide Bar & Saw Chain Applications

Saw Chain				Guide Bars									
					DuraCut™ AT	PowerCut™ RN RW GN PM	SpeedCut™ TXL	VersaCut™ VXL	ControlCut™ PXL	AdvanceCut™ SF SX PX GD MLB	Single Rivet SD DG MLE		
Pitch	Gauge	Chain Type	Drive Links	Bar Length	Drive Teeth	Armor Tip	PowerMatch®	Pro-Lite® MG MP	Pro-Lite® SLG SLH GL GP SP	Pro-Lite® SLB	Pro-Am®	DoubleGuard®	
Solo													
603, 662, 665, 667, 670, 675, 680, 681, 690, 694...													
3/8	.050	**AdvanceCut** 72V	**PowerCut** 72EXL, LGX, LPX **VersaCut** 72DPX	060	16	8		160RNDD009		160VXLHD009			
				068	18	8	*180ATMD009*	180RNDD009		*180SLHD009* 180VXLHD009			
				072	20	8	200ATMD009	200RNDD009		200VXLHD009		200SFHD009	
				076	22	7							
				084	24	8	240ATMD009	240RNDD009				240SFHD009	
				093	28	7		280RNDD009 280RWDD009					
				098	30	7		300RNDD009					
				105	32	7		320RNDD009 320RWDD009					
	.058	**AdvanceCut** 73V	**PowerCut** 73EXL, LGX, LPX **VersaCut** 73DPX	052	13	8		138RNDD009		*138SLHD009*			
				056	15	8				158VXLHD009			
				060	16	8	168ATMD009	168RNDD009		168VXLHD009		168SFHD009	
				068	18	8	188ATMD009	188RNDD009		188VXLHD009		188SFHD009	
				072	20	8	208ATMD009	208RNDD009		*208SLHD009* 208VXLHD009		208SFHD009	
				076	22	7		228RNDD009					
				084	24	7	248ATMD009	248RNDD009				248SFHD009	
				089	26	8		268RNDD009					
				092	28	7	288ATMD009	288RNDD009					
				102	30	8		308RNDD009					
				110	33	7		338RWDD009 338PMDD009					
				119	37	7		378RWDD009 378PMDD009					
	.063	**AdvanceCut** 75V	**PowerCut** 75EXL, LGX, LPX **VersaCut** 75DPX	072	20	7	203ATMD009	203RNDD009					
				084	24	7	243ATMD009	243RNDD009					
				093	28	7		283RNDD009 283RWDD009					
				098	30	7							
				105	32	7		323RNDD009 323RWDD009					
				110	34	7		343RNDD009					
				115	36	7		363RNDD009 363RWDD009					
				119	37	7							
				135	42	7		423RNDD009					

See page FOR 142 for saw chain sharpening tools

* See page FOR 4 for important information on Guard Mate bar-nose tip guards

** See page FOR 4 for important information on Intenz guide bars.

† ANSI B175.1-2012 and CSA Standard Z62.3 regarding reduced kickback does not apply to pole saws or pruners

For the most current fit-up information visit **OregonProducts.com**

Guide Bar & Saw Chain Applications

Saw Chain | **Guide Bars**

Pitch	Gauge	Chain Type	Drive Links	Bar Length	Drive Teeth	DuraCut™ AT Armor Tip	PowerCut™ RN RW GN PM PowerMatch®	SpeedCut™ TXL MG MP Pro-Lite®	VersaCut™ VXL SLG SLH GL GP SP Pro-Lite®	ControlCut™ PXL SLB Pro-Lite®	AdvanceCut™ SF SX PX GD MLB Pro-Am®	Single Rivet SD DG MLE DoubleGuard®
Solo ▲												
...603, 662, 665, 667, 670, 675, 680, 681, 690, 694												
.404	.058		**PowerCut** 58L	084	28	7						
				104	33	7						
	.063		**PowerCut** 59L, 68LX **VersaCut** 27X	065	20	7						
				095	32	7						
				106	36	7	363RNFD009					
Stanley Hydraulic ▲												
CS05, CS06												
.325	.050	**ControlCut** 20BPX	**PowerCut** 20LPX	078	20	8				*200SLGK095* 200VXLGK095			
	.058	**ControlCut** 21BPX	**PowerCut** 21LPX	056	13	7					*138SLBK095* 138PXLBK095	
				064	15	7	158RNBK095				158PXLBK095	
				064	15	8				158VXLGK095		
				066	16	7				168VXLGK095	*168SLBK095* 168PXLBK095	168PXBK095 168SFGK095
				072	18	8				*188SLGK095* 188VXLGK095	188PXLBK095	188PXBK095 188SFGK095
				078	20	7	208RNBK095			*208SLGK095* 208VXLGK095		208PXBK095 208SFGK095
	Narrow Kerf											
	.050	*95VPX*	**SpeedCut** 95TXL	056	13	7		*130MPBK095* 130TXLBK095				130MLBK095
				064	15	7		150TXLBK095				150MLBK095
				066	16	7		*160MPBK095* 160TXLBK095				160MLBK095
				072	18	7		180TXLBK095				180MLBK095
				078	20	7		200TXLBK095				
3/8	.050	**AdvanceCut** 72V	**PowerCut** 72EXL, LGX, LPX **VersaCut** 72DPX	059	16	7	*160ATMZ095*					160PXDK095
				064	18	7	*180ATMZ095*					
				070	20	7	200ATMZ095					
CS04, CS07, CS23, CS26												
3/8	.050	**AdvanceCut** 72V	**PowerCut** 72EXL, LGX, LPX **VersaCut** 72DPX	041	9	8						
				049	12	8						
				060	15	8						
CS11												
3/8	.050	**AdvanceCut** 72V	**PowerCut** 72EXL, LGX, LPX **VersaCut** 72DPX	082	24	8	240RNDD196					
				093	27	8	*270GNDD196*					
				098	30	8						
				117	36	8						
				135	43	8						

▲ See our guides for chainsaws with a **green triangle** on pages FOR 2–3

▲ See our guides for chainsaws with a **yellow triangle** on pages FOR 2–3

Saw chain complies with low kickback performance requirements (FOR 2–3)

Saw chain does not comply with low kickback performance requirements (FOR 2–3)

For information on our PowerSharp Kits see pages FOR 136–137

For Bar & Chain Combos see pages FOR 100–101

Part numbers printed in *red italics* have been obsoleted. Contact your authorized Oregon distributor for availability.

Guide Bar & Saw Chain Applications

Saw Chain				Guide Bars									
						DuraCut™ AT	PowerCut™ RN RW GN PM	SpeedCut™ TXL	VersaCut™ VXL	ControlCut™ PXL	AdvanceCut™ SF SX PX GD MLB	Single Rivet SD DG MLE
Pitch	Gauge	Chain Type	Drive Links	Bar Length	Drive Teeth	Armor Tip	PowerMatch®	Pro-Lite® MG MP	Pro-Lite® SLG SLH GL GP SP	Pro-Lite® SLB	Pro-Am®	DoubleGuard®

Stihl

009, 009L, 010, 011, 012, 015, 017, 018, 018C, 019, 019T, 020, 020 Super, 020T, 023, 023C, 023L, E 10, E 14, E 140, E 180, E 180C, MS 170, MS 171, MS 180 C, MS 180 C-B, MS 180 C-BE, MS 181, MS 181C, MS 181C-BE, MS 190T, MS 191 T, MS 192C, MS 192C-E, MS 192 T, MS 192TC, MS 192 T C-E, MS 193, MS 193 T, MS 200, MS 200 T, MS 201C, MS 201 C-E, MS 201 C-EM, MS 201T, MS 201 TC-M, MS 210, MS 210 C, MS 210 C-BE, MS 211, MS 211C, MS 211 C-BE, MS 220, MS 220 Q, MSE 140, MSE 140 C, MSE 140 C-BQ, MSE 170 C-BQ, MSE 180, MSE 180 C, MSE 180 C-BQ, MSE 200, MSE 210 C-BQ — PowerSharp® Compatible

3/8 low profile	.050	ControlCut 91PXL AdvanceCut 91PX	VersaCut 91VXL	044	12	6				*120SPEA074*		120SXEA074	120SDEA074
				050	14	6				*140SPEA074*		140SXEA074	140SDEA074
				055	16	6				*160SPEA074*		160SXEA074	160SDEA074
	.043	AdvanceCut 90PX		044	12	6							124MLEA074
				050	14	6							144MLEA074
				055	16	6							164MLEA074

Pole Pruner† Models: HT 70, HT 73, HT 75, HT 100, HT 101, HT 130, HT 131, HT 250, HT-KM; Some pole pruners may take 1/4" pitch chain.

3/8 low profile	.050	ControlCut 91PXL AdvanceCut 91PX	VersaCut 91VXL	044	12	6				*120SPEA074*		120SXEA074	120SDEA074
				050	14	6				*140SPEA074*		140SXEA074	140SDEA074
				055	16	6						160SXEA074	160SDEA074
	.043	AdvanceCut 90PX		044	12	6							124MLEA074
				050	14	6							144MLEA074
				055	16	6							164MLEA074

021, 025, 025C, MS 230, MS 230C, MS 230 C-BE, MS 241 C-M, MS 250, MS 250 C, MS 250 C-BE, MS 251, MS 251C, MS 251 C-BE

3/8 low profile	.050	ControlCut 91PXL AdvanceCut 91PX	VersaCut 91VXL	044	12	6				*120SPEA074*		120SXEA074	120SDEA074
				050	14	6				*140SPEA074*		140SXEA074	140SDEA074
				055	16	6						160SXEA074	160SDEA074
.325	.050	ControlCut 20BPX	PowerCut 20LPX	062	16	7					160PXLBA074		
				068	18	7							
	.063	ControlCut 22BPX	PowerCut 22LPX	062	16	7					*163SLBA074* 163PXLBA074	163PXBA074	
				068	18	7					*183SLBA074* 183PXLBA074	183PXBA074	
	Narrow Kerf												
	.050	*95VPX*	SpeedCut 95TXL	062	16	7			*160MPBA074* 160TXLBA074				
				068	18	7			*180MPBA074* 180TXLBA074				

MS 270, MS 270 C, MS 270 C-B, MS 270 C-QS, MS 271, MS 280, MS 280 C-BQ, MS 280 C-QS, MS 291, MS 291 C-BEQ...

.325	.050	ControlCut 20BPX	PowerCut 20LPX	067	16	7	160ATMD025			160VXLGD025			
				074	18	8	180ATMD025			*180SLGD025* 180VXLGD025			
				081	20	8	200ATMD025						

See page FOR 142 for saw chain sharpening tools

* See page FOR 4 for important information on Guard Mate bar-nose tip guards

** See page FOR 4 for important information on Intenz guide bars.

† ANSI B175.1-2012 and CSA Standard Z62.3 regarding reduced kickback does not apply to pole saws or pruners

For the most current fit-up information visit **OregonProducts.com**

Guide Bar & Saw Chain Applications

Saw Chain | **Guide Bars**

Pitch	Gauge	Chain Type	Drive Links	Bar Length	Drive Teeth	DuraCut™ AT	PowerCut™ RN RW GN PM	SpeedCut™ TXL	VersaCut™ VXL	ControlCut™ PXL	AdvanceCut™ SF SX PX GD MLB	Single Rivet SD DG MLE
						Armor Tip	PowerMatch®	Pro-Lite® MG MP	Pro-Lite® SLG SLH GL GP SP	Pro-Lite® SLB	Pro-Am®	DoubleGuard®

Stihl

...MS 270, MS 270 C, MS 270 C-B, MS 270 C-QS, MS 271, MS 280, MS 280 C-BQ, MS 280 C-QS, MS 291, MS 291 C-BEQ

Pitch	Gauge	Chain Type	Drive Links	Bar Length	Drive Teeth	Armor Tip	PowerMatch®	Pro-Lite® MG MP	Pro-Lite® SLG SLH GL GP SP	Pro-Lite® SLB	Pro-Am®	DoubleGuard®
.325	.063	**ControlCut** 22BPX / **PowerCut** 22LPX	056	13	7							
			063	15	8				153VXLGD025			
			067	16	7	163ATMD025	163RNBD025		163VXLGD025		163SFGD025	
			074	18	8	183ATMD025	183RNBD025		*183SLGD025* 183VXLGD025		183SFGD025	
			081	20	7	203ATMDO25			203SLGDO25		203SFGD025	
	Narrow Kerf											
	.050	*95VPX* / **SpeedCut** 95TXL	067	16	7			160TXLGD025				
			074	18	8			*180MPGD025* 180TXLGD025				

026, 026 Pro, 028, 028 Super, 029, 030, 031, 032, 034, 034 Super, 036, 036P, 036 QS, 041, MS 260, MS 260 Pro, MS 261, MS 261 C-M, MS 261 C-Q, MS 261 C-MQ, MS 290, MS 310, MS 341, MS 360, MS 360 C, MS 360 Pro, MS 360 Q-S, MS 361, MS 361 C, MS 361 C-B, MS 361 C-Q

Pitch	Gauge	Chain Type	Drive Links	Bar Length	Drive Teeth	Armor Tip	PowerMatch®	Pro-Lite® MG MP	Pro-Lite® SLG SLH GL GP SP	Pro-Lite® SLB	Pro-Am®	DoubleGuard®
	.050	**ControlCut** 20BPX / **PowerCut** 20LPX	067	16	7	160ATMD025			160VXLGD025			
			074	18	8	180ATMD025			*180SLGD025* 180VXLGD025			
			081	20	8	200ATMD025						
.325	.063	**ControlCut** 22BPX / **PowerCut** 22LPX	056	13	7							
			063	15	8				153VXLGD025			
			067	16	7	163ATMD025	163RNBD025		163VXLGD025		163SFGD025	
			074	18	8	183ATMD025	183RNBD025		*183SLGD025* 183VXLGD025		183SFGD025	
			081	20	7	203ATMDO25			203SLGDO25		203SFGD025	
	Narrow Kerf											
	.050	*95VPX* / **SpeedCut** 95TXL	067	16	7			160TXLGD025				
			074	18	8			*180MPGD025* 180TXLGD025				
3/8	.050	**AdvanceCut** 72V / **PowerCut** 72EXL, LGX, LPX **VersaCut** 72DPX	060	16	8	160ATMD025	160RNDD025		160VXLHD025		160SFHD025	
			066	18	8	180ATMD025	180RNDD025		*180SLHD025* 180VXLHD025			
			072	20	8	200ATMD025	200RNDD025		*200SLHD025* 200VXLHD025		200SFHD025	
			084	24	7	240ATMD025	240RNDD025		*240SLHD025* 240VXLHD025		240SFHD025	
	.063	**AdvanceCut** 75V / **PowerCut** 75EXL, LGX, LPX **VersaCut** 75DPX	060	16	8	163ATMD025	163RNDD025		*163SLHD025* 163VXLHD025		163SFHD025	
			066	18	8	183ATMD025	183RNDD025		183VXLHD025		183SFHD025	
			072	20	8	203ATMD025	203RNDD025		203VXLHD025		203SFHD025	
			077	22	8		223RNDD025					
			084	24	7	243ATMD025	243RNDD025		*243SLHD025* 243VXLHD025		243SFHD025	

See our guides for chainsaws with a **green triangle** on pages FOR 2–3

See our guides for chainsaws with a **yellow triangle** on pages FOR 2–3

Saw chain complies with low kickback performance requirements (FOR 2–3)

Saw chain does not comply with low kickback performance requirements (FOR 2–3)

For information on our PowerSharp Kits see pages FOR 136–137

For Bar & Chain Combos see pages FOR 100–101

Part numbers printed in *red italics* have been obsoleted. Contact your authorized Oregon distributor for availability.

Guide Bar & Saw Chain Applications

Stihl

E 20, E 220, MS 311, MS 362, MS 362 C-M, MS 362 C-MQ, MS 362 C-Q, MSE 220, MSE 250 C...

Pitch	Gauge	Chain Type	Drive Links	Bar Length	Drive Teeth	DuraCut™ AT Armor Tip	PowerCut™ RN RW GN PM PowerMatch®	SpeedCut™ TXL Pro-Lite® MG MP	VersaCut™ VXL Pro-Lite® SLG SLH GL GP SP	ControlCut™ PXL Pro-Lite® SLB	AdvanceCut™ SF SX PX GD MLB Pro-Am®	Single Rivet SD DG MLE DoubleGuard®
3/8	.050	**AdvanceCut** 72V	060	16	8	160ATMD025	160RNDD025		160VXLHD025		160SFHD025	
			066	18	8	180ATMD025	180RNDD025		*180SLHD025* 180VXLHD025			
			072	20	8	200ATMD025	200RNDD025		*200SLHD025* 200VXLHD025		200SFHD025	
	.063	**AdvanceCut** 75V	060	16	8	163ATMD025	163RNDD025		*163SLHD025* 163VXLHD025		163SFHD025	
			066	18	8	183ATMD025	183RNDD025		183VXLHD025		183SFHD025	
			072	20	8	203ATMD025	203RNDD025		203VXLHD025		203SFHD025	

PowerCut 72EXL, LGX, LPX **VersaCut** 72DPX

PowerCut 75EXL, LGX, LPX **VersaCut** 75DPX

Stihl

039, 048, MS 390, MS 391

Pitch	Gauge	Chain Type	Drive Links	Bar Length	Drive Teeth	DuraCut™ AT Armor Tip	PowerCut™ RN RW GN PM PowerMatch®	SpeedCut™ TXL Pro-Lite® MG MP	VersaCut™ VXL Pro-Lite® SLG SLH GL GP SP	ControlCut™ PXL Pro-Lite® SLB	AdvanceCut™ SF SX PX GD MLB Pro-Am®	Single Rivet SD DG MLE DoubleGuard®
3/8	.050	**AdvanceCut** 72V	060	16	8	160ATMD025	160RNDD025		160VXLHD025		160SFHD025	
			066	18	8	180ATMD025	180RNDD025		*180SLHD025* 180VXLHD025			
			072	20	8	200ATMD025	200RNDD025		*200SLHD025* 200VXLHD025		200SFHD025	
			084	24	7	240ATMD025	240RNDD025		*240SLHD025* 240VXLHD025		240SFHD025	
	.063	**AdvanceCut** 75V	060	16	8	163ATMD025	163RNDD025		*163SLHD025* 163VXLHD025		163SFHD025	
			066	18	8	183ATMD025	183RNDD025		183VXLHD025		183SFHD025	
			072	20	8	203ATMD025	203RNDD025		203VXLHD025		203SFHD025	
			077	22	8		223RNDD025					
			084	24	7	243ATMD025	243RNDD025		*243SLHD025* 243VXLHD025		243SFHD025	

PowerCut 72EXL, LGX, LPX **VersaCut** 72DPX

PowerCut 75EXL, LGX, LPX **VersaCut** 75DPX

038, 038 Super Magnum, 042, 044, 044M, 045, 046, 046M, MS 440, MS 440 Magnum, MS 441, MS 441 C, MS 441 C-M, MS 441 C-MQ, MS 441 R C-M, MS 460, MS 460 Magnum, MS 461...

Pitch	Gauge	Chain Type	Drive Links	Bar Length	Drive Teeth	DuraCut™ AT Armor Tip	PowerCut™ RN RW GN PM PowerMatch®	SpeedCut™ TXL Pro-Lite® MG MP	VersaCut™ VXL Pro-Lite® SLG SLH GL GP SP	ControlCut™ PXL Pro-Lite® SLB	AdvanceCut™ SF SX PX GD MLB Pro-Am®	Single Rivet SD DG MLE DoubleGuard®
3/8	.050	**AdvanceCut** 72V	060	16	8	160ATMD025	160RNDD025		160VXLHD025		160SFHD025	
			066	18	8	180ATMD025	180RNDD025		*180SLHD025* 180VXLHD025			
			072	20	8	200ATMD025	200RNDD025		*200SLHD025* 200VXLHD025		200SFHD025	
			084	24	7	240ATMD025	240RNDD025		*240SLHD025* 240VXLHD025		240SFHD025	
			091	28	8		280RNDD025					
			091	28	7		280RWDD025					
			098	30	7		300RNDD025					
			105	32	7		320RNDD025 320RWDD025					
			114	36	7							

PowerCut 72EXL, LGX, LPX **VersaCut** 72DPX

See page FOR 142 for saw chain sharpening tools

* See page FOR 4 for important information on Guard Mate bar-nose tip guards

** See page FOR 4 for important information on Intenz guide bars.

† ANSI B175.1-2012 and CSA Standard Z62.3 regarding reduced kickback does not apply to pole saws or pruners

For the most current fit-up information visit **OregonProducts.com**

Guide Bar & Saw Chain Applications

Saw Chain				Guide Bars									
						DuraCut™ AT	PowerCut™ RN RW GN PM	SpeedCut™ TXL	VersaCut™ VXL	ControlCut™ PXL	AdvanceCut™ SF SX PX GD MLB	Single Rivet SD DG MLE
Pitch	Gauge	Chain Type	Drive Links	Bar Length	Drive Teeth	Armor Tip	PowerMatch®	Pro-Lite® MG MP	Pro-Lite® SLG SLH GL GP SP	Pro-Lite® SLB	Pro-Am®	DoubleGuard®

Stihl

...038, 038 Super Magnum, 042, 044, 044M, 045, 046, 046M, MS 440, MS 440 Magnum, MS 441, MS 441 C, MS 441 C-M, MS 441 C-MQ, MS 441 R C-M, MS 460, MS 460 Magnum, MS 461

Pitch	Gauge	Chain Type		Drive Links	Bar Length	Drive Teeth	Armor Tip	PowerMatch®	Pro-Lite® MG MP	Pro-Lite® SLG SLH GL GP SP	Pro-Lite® SLB	Pro-Am®	DoubleGuard®
3/8	.063	**AdvanceCut** 75V	**PowerCut** 75EXL, LGX, LPX **VersaCut** 75DPX	060	16	8	163ATMD025	163RNDD025		*163SLHD025* 163VXLHD025		163SFHD025	
				066	18	8	183ATMD025	183RNDD025		183VXLHD025		183SFHD025	
				072	20	8	203ATMD025	203RNDD025		203VXLHD025		203SFHD025	
				077	22	8		223RNDD025					
				084	24	7	243ATMD025	243RNDD025		*243SLHD025* 243VXLHD025		243SFHD025	
				092	28	8		283RNDD025					
				091	28	7		283RWDD025					
				098	30	7		303RNDD025					
				106	32	8		323RNDD025 323RWDD025 323PMDD025					
				110	34	7		343RNDD025					
				114	36	7		363RNDD025 363PMDD025 363RWDD025					
				135	42	7		423RNDD025					

056, 064, 066, 066 Magnum, MS 650, MS 660, MS 661 C-M, MS 661 RC-M...

Pitch	Gauge	Chain Type		Drive Links	Bar Length	Drive Teeth	Armor Tip	PowerMatch®	Pro-Lite® MG MP	Pro-Lite® SLG SLH GL GP SP	Pro-Lite® SLB	Pro-Am®	DoubleGuard®
3/8	.050	**AdvanceCut** 72V	**PowerCut** 72EXL, LGX, LPX **VersaCut** 72DPX	060	16	8	160ATMD025	160RNDD025		160VXLHD025		160SFHD025	
				066	18	8	180ATMD025	180RNDD025		*180SLHD025* 180VXLHD025			
				072	20	8	200ATMD025	200RNDD025		*200SLHD025* 200VXLHD025		200SFHD025	
				084	24	7	240ATMD025	240RNDD025		*240SLHD025* 240VXLHD025		240SFHD025	
				091	28	8		280RNDD025					
				091	28	7		280RWDD025					
				098	30	7		300RNDD025					
				105	32	7		320RNDD025 320RWDD025					
				114	36	7							

See our guides for chainsaws with a **green triangle** on pages FOR 2–3

See our guides for chainsaws with a **yellow triangle** on pages FOR 2–3

Saw chain complies with low kickback performance requirements (FOR 2–3)

Saw chain does not comply with low kickback performance requirements (FOR 2–3)

For information on our PowerSharp Kits see pages FOR 136–137

For Bar & Chain Combos see pages FOR 100–101

Part numbers printed in *red italics* have been obsoleted. Contact your authorized Oregon distributor for availability.

Guide Bar & Saw Chain Applications

Saw Chain				Guide Bars									
						DuraCut™ AT	PowerCut™ RN RW GN PM	SpeedCut™ TXL	VersaCut™ VXL	ControlCut™ PXL	AdvanceCut™ SF SX PX GD MLB	Single Rivet SD DG MLE
Pitch	Gauge	Chain Type	Drive Links	Bar Length	Drive Teeth	Armor Tip	PowerMatch®	Pro-Lite® MG MP	Pro-Lite® SLG SLH GL GP SP	Pro-Lite® SLB	Pro-Am®	DoubleGuard®

Stihl

...056, 064, 066, 066 Magnum, MS 650, MS 660, MS 661 C-M, MS 661 RC-M

3/8	.063	**AdvanceCut** 75V	**PowerCut** 75EXL, LGX, LPX **VersaCut** 75DPX	060	16	8	163ATMD025	163RNDD025		*163SLHD025* 163VXLHD025		163SFHD025	
				066	18	8	183ATMD025	183RNDD025		183VXLHD025		183SFHD025	
				072	20	8	203ATMD025	203RNDD025		203VXLHD025		203SFHD025	
				077	22	8		223RNDD025					
				084	24	7	243ATMD025	243RNDD025		*243SLHD025* 243VXLHD025		243SFHD025	
				092	28	8		283RNDD025					
				091	28	7		283RWDD025					
				098	30	7		303RNDD025					
				105	32	7		323RNDD025 323RWDD025 323PMDD025					
				110	34	7		343RNDD025					
				114	36	7		363RNDD025 363PMDD025 363RWDD025					
				135	42	7		423RNDD025					
.404	.063		**PowerCut** 59L, 68LX **VersaCut** 27X	065	20	7							
				083	28	7							
				095	32	7		323RNFD025					
				104	36	7							

08SEQ, 050, 051, 075, 076, 078, 084, 088, 088M, E 30, MS 880, MS 880 Magnum, MS 880 R, S 10; Some saws may take 3/8" pitch chain.

.404	.063		**PowerCut** 59L, 68LX **VersaCut** 27X	068	21	7		213RNFE031					
				080	25	7		253RNFE031					
				095	32	7							
				099	33	7							

Sun Joe

Pole Saws: SWJ800E, SWJ802E, iON8PS

3/8 low profile	.050	**ControlCut** 91PXL **AdvanceCut** 91PX	**VersaCut** 91VXL	033	8								080SDEA041

SWJ803E

3/8 low profile	.050	**ControlCut** 91PXL **AdvanceCut** 91PX	**VersaCut** 91VXL	040	10								100SDEA041

SWJ698E

3/8 low profile	.050	**ControlCut** 91PXL **AdvanceCut** 91PX	**VersaCut** 91VXL	045	12							120SXEA041	120SDEA041

See page FOR 142 for saw chain sharpening tools

* See page FOR 4 for important information on Guard Mate bar-nose tip guards

** See page FOR 4 for important information on Intenz guide bars.

† ANSI B175.1-2012 and CSA Standard Z62.3 regarding reduced kickback does not apply to pole saws or pruners

For the most current fit-up information visit **OregonProducts.com**

Guide Bar & Saw Chain Applications

Saw Chain				Guide Bars									
						DuraCut™ AT	PowerCut™ RN RW GN PM	SpeedCut™ TXL	VersaCut™ VXL	ControlCut™ PXL	AdvanceCut™ SF SX PX GD MLB	Single Rivet SD DG MLE
Pitch	Gauge	Chain Type	Drive Links	Bar Length	Drive Teeth	Armor Tip	PowerMatch®	Pro-Lite® MG MP	Pro-Lite® SLG SLH GL GP SP	Pro-Lite® SLB	Pro-Am®	DoubleGuard®

Sun Joe

Pitch	Gauge	Chain Type	Chain Type	Drive Links	Bar Length	Drive Teeth	Armor Tip	PowerMatch®	Pro-Lite® MG MP	Pro-Lite® SLG SLH GL GP SP	Pro-Lite® SLB	Pro-Am®	DoubleGuard®
SWJ699E													
3/8 low profile	.050	**ControlCut** 91PXL **AdvanceCut** 91PX	**VersaCut** 91VXL	052	14							140SXEA041	140SDEA041
SWJ700E													
3/8 low profile	.050	**ControlCut** 91PXL **AdvanceCut** 91PX	**VersaCut** 91VXL	056	16	6						160SXEA041	160SDEA041
				057	16	6	Original Equipment Guide Bar						
iON16CS													
3/8 low profile	.050	**ControlCut** 91PXL **AdvanceCut** 91PX	**VersaCut** 91VXL	056	16	6						160SXEA041	160SDEA041
SWJ701E													
3/8 low profile	.050	**ControlCut** 91PXL **AdvanceCut** 91PX	**VersaCut** 91VXL	062	18								180SDEA041

Tanaka

ECS-35, ECS-290, ECS-300, ECS-320, ECS-330, ECS-350, ECS-351, ECS-355, ECS-356, ECS-370, ECS-405, ECS-3301, ECS-3351, ECS-3401, ECS-3500, TCS-33EB, TCS-3301PFS, TCS-3351PFS, TCS-3401 — PowerSharp® Compatible

Pitch	Gauge	Chain Type	Chain Type	Drive Links	Bar Length	Drive Teeth	Armor Tip	PowerMatch®	Pro-Lite® MG MP	Pro-Lite® SLG SLH GL GP SP	Pro-Lite® SLB	Pro-Am®	DoubleGuard®
	.050	**ControlCut** 91PXL **AdvanceCut** 91PX	**VersaCut** 91VXL	045	12	6				*120SPEA041*		120SXEA041	120SDEA041
				052	14	6						140SXEA041	140SDEA041
				057	16	6						160SXEA041	160SDEA041
				062	18	6							180SDEA041
	Intenz® **												
3/8 low profile	.050	**ControlCut** 91PXL **AdvanceCut** 91PX	**VersaCut** 91VXL	045	12	6				*120SPET041*			
				052	14	6				*140SPET041*			140SDET041
				057	16	6				*160SPET041*			160SDET041
				062	18	6							180SDET041
	.043	**AdvanceCut** 90PX		045	12	6							124MLEA041
				052	14	6							144MLEA041
				057	16	6							*164MLEA041*
TCS-EDTP													
	.050	**ControlCut** 91PXL **AdvanceCut** 91PX	**VersaCut** 91VXL	045	12	6				*120SPEA041*		120SXEA041	120SDEA041
				052	14	6						140SXEA041	140SDEA041
3/8 low profile	Intenz **												
	.050	**ControlCut** 91PXL **AdvanceCut** 91PX	**VersaCut** 91VXL	045	12	6				*120SPET041*			
				052	14	6				*140SPET041*			140SDET041

See our guides for chainsaws with a **green triangle** on pages FOR 2–3

See our guides for chainsaws with a **yellow triangle** on pages FOR 2–3

Saw chain complies with low kickback performance requirements (FOR 2–3)

Saw chain does not comply with low kickback performance requirements (FOR 2–3)

For information on our PowerSharp Kits see pages FOR 136–137

For Bar & Chain Combos see pages FOR 100–101

Part numbers printed in *red italics* have been obsoleted. Contact your authorized Oregon distributor for availability.

Guide Bar & Saw Chain Applications

Saw Chain				Guide Bars									
							DuraCut™ AT	PowerCut™ RN RW GN PM	SpeedCut™ TXL	VersaCut™ VXL	ControlCut™ PXL	AdvanceCut™ SF SX PX GD MLB	Single Rivet SD DG MLE
Pitch	Gauge	Chain Type	Drive Links	Bar Length	Drive Teeth	Armor Tip	PowerMatch®	Pro-Lite® MG MP	Pro-Lite® SLG SLH GL GP SP	Pro-Lite® SLB	Pro-Am®	DoubleGuard®

Tanaka

ECS-505, ECS-506

Pitch	Gauge	Chain Type		Drive Links	Bar Length	Drive Teeth	Armor Tip	PowerMatch®	Pro-Lite® MG MP	Pro-Lite® SLG SLH GL GP SP	Pro-Lite® SLB	Pro-Am®	DoubleGuard®
3/8	.050	**AdvanceCut** 72V	**PowerCut** 72EXL, LGX, LPX **VersaCut** 72DPX	060	16	7	*160ATMD176*	160RNDD176		160VXLHD176		160PXDD176	
				064	18	7				180VXLHD176			
				066	18	7		180RNDD176				180PXDD176	
				070	20	7	200ATMD176	200RNDD176		200VXLHD176		200PXDD176	
				081	24	7		240RNDD176					
				093	27	7							
				092	28	7		280RNDD176					

Pruner Models†: TPS-200 (Attachment), TPS-210, TPS-250, TPS-250PF, TPS-270, TPS-270PF, TPS-2501, TPS-2510

Pitch	Gauge	Chain Type		Drive Links	Bar Length	Drive Teeth	Armor Tip	PowerMatch®	Pro-Lite® MG MP	Pro-Lite® SLG SLH GL GP SP	Pro-Lite® SLB	Pro-Am®	DoubleGuard®
3/8 low profile	.043	**AdvanceCut** 90PX		040	10	6							
				045	12	6							124MLEA041

ECS-415, ECS-4000, ECS-4000B, ECV-4501, TCS40EA, TCS51EAP

Pitch	Gauge	Chain Type		Drive Links	Bar Length	Drive Teeth	Armor Tip	PowerMatch®	Pro-Lite® MG MP	Pro-Lite® SLG SLH GL GP SP	Pro-Lite® SLB	Pro-Am®	DoubleGuard®
.325	.050	**ControlCut** 20BPX	**PowerCut** 20LPX	056	13	8							
				066	16	7		160RNBK041		*160GLGK041*		160PXBK041	
				072	18	7		180RNBK041		*180GLGK041* 180VXLGK041		180PXBK041	
				078	20	7				*200GLGK041*		200PXBK041	
	Intenz® **												
	.050	**ControlCut** 20BPX	**PowerCut** 20LPX	066	16	7						*160PXBT041*	
				072	18	7						*180PXBT041*	
				078	20	7						200PXBT041	
	Narrow Kerf												
	.050	*95VPX*	**SpeedCut** 95TXL	056	13	7						130MLBK041	
				064	15	7						150MLBK041	
				066	16	7			160TXLGK041			160MLBK041	
				072	18	7			180TXLGK041			180MLBK041	

ECV 5601

Pitch	Gauge	Chain Type		Drive Links	Bar Length	Drive Teeth	Armor Tip	PowerMatch®	Pro-Lite® MG MP	Pro-Lite® SLG SLH GL GP SP	Pro-Lite® SLB	Pro-Am®	DoubleGuard®
.325	.050	**ControlCut** 20BPX	**PowerCut** 20LPX	066	16	7	*160ATMZ095*	160RNBK095		*160SLGK095* 160VXLGK095		*160PXBK095*	
				072	18	7	*180ATMZ095*					180PXBK095	
				072	18	8				*180SLGK095* 180VXLGK095			
				078	20	7	200ATMZ095	200RNBK095		*200SLGK095* 200VXLGK095		200PXBK095	
	Narrow Kerf												
	.050	*95VPX*	**SpeedCut** 95TXL	066	16	7			*160MPBK095* 160TXLBK095			160MLBK095	
				072	18	7			180TXLBK095			180MLBK095	
				078	20	7							

See page FOR 142 for saw chain sharpening tools

* See page FOR 4 for important information on Guard Mate bar-nose tip guards

** See page FOR 4 for important information on Intenz guide bars.

† ANSI B175.1-2012 and CSA Standard Z62.3 regarding reduced kickback does not apply to pole saws or pruners

For the most current fit-up information visit **OregonProducts.com**

Guide Bar & Saw Chain Applications

Saw Chain				Guide Bars									
						DuraCut™ AT	PowerCut™ RN RW GN PM	SpeedCut™ TXL	VersaCut™ VXL	ControlCut™ PXL	AdvanceCut™ SF SX PX GD MLB	Single Rivet SD DG MLE
Pitch	Gauge	Chain Type	Drive Links	Bar Length	Drive Teeth	Armor Tip	PowerMatch®	Pro-Lite® MG MP	Pro-Lite® SLG SLH GL GP SP	Pro-Lite® SLB	Pro-Am®	DoubleGuard®

Tanaka

ECS-650, ECS-655

Pitch	Gauge	Chain Type		Drive Links	Bar Length	Drive Teeth	Armor Tip	PowerMatch®	Pro-Lite® MG MP	Pro-Lite® SLG SLH GL GP SP	Pro-Lite® SLB	Pro-Am®	DoubleGuard®
3/8	.050	**AdvanceCut** 72V	**PowerCut** 72EXL, LGX, LPX **VersaCut** 72DPX	060	16	7	*160ATMD176*	160RNDD176		160VXLHD176 *160GLHD176*		160PXDD176	
				064	18	7				180VXLHD176			
				066	18	7		180RNDD176				180PXDD176	
				070	20	7	200ATMD176	200RNDD176		200VXLHD176 *200GLHD176*		200PXDD176	
				081	24	7		240RNDD176					
				092	28	7		280RNDD176					
				105	32	7							

Toro

51100, 51140

Pitch	Gauge	Chain Type		Drive Links	Bar Length	Drive Teeth	Armor Tip	PowerMatch®	Pro-Lite® MG MP	Pro-Lite® SLG SLH GL GP SP	Pro-Lite® SLB	Pro-Am®	DoubleGuard®
3/8 low profile	.050	**ControlCut** 91PXL **AdvanceCut** 91PX	**VersaCut** 91VXL	040	10	6							
				045	12	6				*120SPEA041*		120SXEA041	120SDEA041
				052	14	6						140SXEA041	140SDEA041
				056	16	6						160SXEA041	160SDEA041
	Intenz® **												
	.050	**ControlCut** 91PXL **AdvanceCut** 91PX	**VersaCut** 91VXL	045	12	6							
				052	14	6				*140SPET041*			140SDET041
				056	16	6				*160SPET041*			160SDET041
ProLine Pruner†													
3/8 low profile	.050	**ControlCut** 91PXL **AdvanceCut** 91PX	**VersaCut** 91VXL	040	10	6							100SDEA218

Troy-Bilt

TB4016, TB4216, TB4218

Pitch	Gauge	Chain Type		Drive Links	Bar Length	Drive Teeth	Armor Tip	PowerMatch®	Pro-Lite® MG MP	Pro-Lite® SLG SLH GL GP SP	Pro-Lite® SLB	Pro-Am®	DoubleGuard®
3/8 low profile	.050	**ControlCut** 91PXL **AdvanceCut** 91PX	**VersaCut** 91VXL	054	16	6							*160SDET095*
				060	18	6							180SDEA095
TBCS57													
3/8 low profile	.050	**ControlCut** 91PXL **AdvanceCut** 91PX	**VersaCut** 91VXL	040	10	6							100SDEA041

See our guides for chainsaws with a **green triangle** on pages FOR 2–3

See our guides for chainsaws with a **yellow triangle** on pages FOR 2–3

Saw chain complies with low kickback performance requirements (FOR 2–3)

Saw chain does not comply with low kickback performance requirements (FOR 2–3)

For information on our PowerSharp Kits see pages FOR 136–137

For Bar & Chain Combos see pages FOR 100–101

Part numbers printed in *red italics* have been obsoleted. Contact your authorized Oregon distributor for availability.

Guide Bar & Saw Chain Applications

Saw Chain				Guide Bars									
						DuraCut™ AT	PowerCut™ RN RW GN PM	SpeedCut™ TXL	VersaCut™ VXL	ControlCut™ PXL	AdvanceCut™ SF SX PX GD MLB	Single Rivet SD DG MLE
Pitch	Gauge	Chain Type	Drive Links	Bar Length	Drive Teeth	Armor Tip	PowerMatch®	Pro-Lite® MG MP	Pro-Lite® SLG SLH GL GP SP	Pro-Lite® SLB	Pro-Am®	DoubleGuard®

Troy-Bilt

TB4018

Pitch	Gauge	Chain Type	Chain Type	Drive Links	Bar Length	Drive Teeth	Armor Tip	PowerMatch®	Pro-Lite® MG MP	Pro-Lite® SLG SLH GL GP SP	Pro-Lite® SLB	Pro-Am®	DoubleGuard®
3/8 low profile	.050	ControlCut 91PXL AdvanceCut 91PX	VersaCut 91VXL	052	14	6						140SXEA041	140SDEA041
				056	16	6						160SXEA041	160SDEA041
				062	18	6							180SDEA041

TB3516, TB4516

3/8 low profile	.050	ControlCut 91PXL AdvanceCut 91PX	VersaCut 91VXL	055	16	6							160SDEA318

TB4620, TB4920, TB5018, TB5020

Narrow Kerf

.325	.050	*95VPX*	SpeedCut 95TXL	072	18	7			180TXLBK095			180MLBK095	
				078	20	7							

TB5518

.325	.050	ControlCut 20BPX	PowerCut 20LPX	066	16	7	*160ATMZ095*	160RNBK095		*160SLGK095* 160VXLGK095		*160PXBK095*	
				072	18	7	*180ATMZ095*			*180SLBK095*		180PXBK095	
				072	18	8				*180SLGK095* 180VXLGK095			
				078	20	8	200ATMK095	200RNBK095		*200SLGK095* 200VXLGK095		200PXBK095	

Wen / Wagner

1100, 1200, 1400, 2000, 2400, 2600, 2700, 5008, 5010, 5014, 5016, Bumble Bee, Hornet, Wasp

3/8 low profile	.050	ControlCut 91PXL AdvanceCut 91PX	VersaCut 91VXL	035	8	6							
				041	10	6							
				048	12	6							
				053	14	6							
				058	16	6							

6014, 6016, Lumberjack

3/8 low profile	.050	ControlCut 91PXL AdvanceCut 91PX	VersaCut 91VXL	049	14	6							
				055	16	6							

3814, 4014

3/8 low profile	.050	ControlCut 91PXL AdvanceCut 91PX	VersaCut 91VXL	052	14	7						140SXEA041	140SDEA041
				056	16	7						160SXEA041	160SDEA041

3816, 3818, 4016

3/8 low profile	.050	ControlCut 91PXL AdvanceCut 91PX	VersaCut 91VXL	056	16	7				*160SPEA095*		160SXEA095	160SDEA095
				060	18	7							180SDEA095

See page FOR 142 for saw chain sharpening tools

* See page FOR 4 for important information on Guard Mate bar-nose tip guards

** See page FOR 4 for important information on Intenz guide bars.

† ANSI B175.1-2012 and CSA Standard Z62.3 regarding reduced kickback does not apply to pole saws or pruners

For the most current fit-up information visit **OregonProducts.com**

Guide Bar & Saw Chain Applications

Saw Chain				Guide Bars									
						DuraCut™ AT	PowerCut™ RN RW GN PM	SpeedCut™ TXL	VersaCut™ VXL	ControlCut™ PXL	AdvanceCut™ SF SX PX GD MLB	Single Rivet SD DG MLE
Pitch	Gauge	Chain Type	Drive Links	Bar Length	Drive Teeth	Armor Tip	PowerMatch®	Pro-Lite® MG MP	Pro-Lite® SLG SLH GL GP SP	Pro-Lite® SLB	Pro-Am®	DoubleGuard®
Worx												
WG300, WG303, WG303.1, WG304, WG304.1												
3/8 low profile	.050	**ControlCut** 91PXL **AdvanceCut** 91PX	**VersaCut** 91VXL	053	14	7					140SXEA041	140SDEA041
				057	16	7					160SXEA041	160SDEA041
				063	18	7						180SDEA041
WG309												
3/8 low profile	.050	**ControlCut** 91PXL **AdvanceCut** 91PX	**VersaCut** 91VXL	040	10	6						100SDEA041
WG310												
3/8 low profile	.043	**AdvanceCut** 90PX		034	8	6						
WG305, WG305.1												
3/8 low profile	.050	**ControlCut** 91PXL **AdvanceCut** 91PX	**VersaCut** 91VXL	052	14	6					140SXEA041	140SDEA041
WG307, WG308, Jawsaw, WG320, WG321												
1/4	.050		**ControlCut** 25AP	042	6	5						
WG380, WG380.9												
3/8 low profile	.043	**AdvanceCut** 90PX		045	12							124MLEA041

See our guides for chainsaws with a **green triangle** on pages FOR 2–3

See our guides for chainsaws with a **yellow triangle** on pages FOR 2–3

Saw chain complies with low kickback performance requirements (FOR 2–3)

Saw chain does not comply with low kickback performance requirements (FOR 2–3)

For information on our PowerSharp Kits see pages FOR 136–137

For Bar & Chain Combos see pages FOR 100–101

Part numbers printed in *red italics* have been obsoleted. Contact your authorized Oregon distributor for availability.

Ordering Oregon Saw Chain

Chain Packaging & Saw Chain Ordering

Note: Dealers must provide customers with the correct-color label, or loop box (green or yellow) with each sale of each chain part number. Sufficient ANSI labels or printed loop boxes are provided in the original factory reel shippers containing Oregon chains. Below are additional loop boxes that may be ordered. See FOR 2–3 for full details on correct labeling of chain sales.

Package Type	OREGON	Description
Loop Packaging	591063	Loop Carton 25-pack (Yellow ANSI), Black
	591062	Loop Carton 25-pack (Green ANSI), Black
	591061	Loop Carton 25-pack (Green ANSI), Grey

Ordering Oregon Chain

Packaging Type	Chain Type	+	Package Designation	=	OREGON
Bulk Chain, 100-Foot Reel	72LPX	+	100U = 100-Foot Reel	=	72LPX100U
Bulk Chain, 25-Foot Reel	91PX	+	025U = 25-Foot Reel	=	91PX025U
Loop of Chain, in a Loop Box	21LPX	+	066G = 66 Drive Link Loop in a Loop Box	=	21LPX066G

Components Included in Reel Shippers

Pitch	Loop Cartons	Parts Kit		Loop Cartons	Parts Kit
	25 ft. Reels			**100 ft. Reels**	
1/4"	6	10 TS / 10 PSTS		30	40 TS / 40 PSTS
3/8" Low Profile™	6	10 TS / 10 PSTS		30	40 TS / 40 PSTS
.325"	6	9 TS / 9 PSTS		30	36 TS / 36 PSTS
3/8"	6	8 TS / 8 PSTS		24	32 TS / 32 PSTS
.404"	N/A	N/A		14	32 TS / 32 PSTS

Oregon Part Number Conversion Table

				Examples		
Pitch	Gauge	Retail Chain Code	Chain Type	Drive Link Count	Retail** Part Numbers	Dealer† Part Numbers
1/4"	.050"	A	25AP	42	A42	25AP042G
3/8" Low Profile™	.043"	R	90PX	40	R40	90PX040G
3/8" Low Profile	.050"	S	91PX	52	S52	91PX052G
3/8" Low Profile	.050"	T	91VXL	57	T57	91VXL057G
.325"	.050"	M	95TXL	66	M66	95TXL066G
.325"	.050"	*G*	*95VPX*	66	*G66*	*95VPX066G*
.325"	.050"	H	20BPX	66	H66	20BPX066G
.325"	.050"	Q	20LPX	72	Q72	20LPX072G
.325"	.058"	J	21BPX	66	J66	21BPX066G
.325"	.058"	U	21LPX	72	U72	21LPX072G
.325"	.063"	L	22BPX	67	L67	22BPX067G
.325"	.063"	V	22LPX	67	V67	22LPX067G
3/8	.050"	D	72V	60	D60	72V060G
3/8"	.050"	B	72EXL	72	B72	72EXL072G
3/8"	.050"	E	72LPX	72	E72	72LPX072G
3/8"	.058"	P	73V	72	P72	73V072G
3/8"	.058"	K	73EXL	72	K72	73EXL072G

** As sold in hardware stores and home centers, † as sold in servicing dealerships

Chain part numbers printed in *red italics* have been obsoleted. Contact your authorized Oregon distributor for availability.

Overview of Packaging Changes

Product Families and Package Colors
We have redesigned our packaging to help you identify the products that are right for you. We created three tiers of user-friendly product families, differentiated by color, to simplify your selection process.

PROFESSIONAL USERS	OCCASIONAL USERS	BASIC PRODUCTS
PowerCut™ SpeedCut™ VersaCut™ ControlCut™ DuraCut™ RipCut™	AdvanceCut™ PowerSharp®	Single rivet guide bars Accessories

Professional Users will see premium features designed for their jobs in black packaging.

Occasional Users can find products with features geared specifically for them in gray packaging.

Basic Products are identified by white packaging.

Package Materials and Durability
You'll notice a real improvement in our packaging; we've used higher quality materials and superior construction for better durability.

Clear Communication and User-Friendly Layout
You can identify and choose the right product through the following:

- Product family
- Part number
- OEM chainsaw fit up
- Product information
- Window for product visibility
- Bar motor mount exposed for easy identification
- Areas to write product information

Guide Bar Packaging

front back

Saw Chain Loop Packaging

front back generic loop box front

Guide Bar & Saw Chain Combos

Oregon® Guide Bar & Chain Combos by Motor Mount Number

Our updated line-up of Oregon bar and chain combos puts many of our most popular products together in attractive packaging for ease of selection and increased sales. The new visual graphic style we are introducing on the display packaged loop line-up is carried over into our refreshed guide bar & chain combo offering. The complete Oregon merchandising program lets you move guide bars and chains out of your back room and into your showroom.

		Gude Bar			Saw Chain				
Bar Mount	Combo Part No.	Length	Part №	Family	Type	Pitch	Gauge	Drive Links	Family
Craftsman, Echo, Poulan, Poulan Pro, Shindaiwa, Tanaka									
A041	105698	12"	120 DGE A041	Single Rivet	91PX	3/8" LP	.050"	45	AdvanceCut
	105699	14"	140 DGE A041	Single Rivet	91PX	3/8" LP	.050"	52	AdvanceCut
	105700	16"	160 DGE A041	Single Rivet	91PX	3/8" LP	.050"	56	AdvanceCut
	540394	18"	180 DGE A041	Single Rivet	91PX	3/8" LP	.050"	62	AdvanceCut
K041	557505	16"	160 GDB K041	AdvanceCut™	20BPX	.325"	.050"	66	ControlCut™
	557504	18"	180 GDB K041	AdvanceCut	20BPX	.325"	.050"	72	ControlCut
	557503	20"	200 GDB K041	AdvanceCut	20BPX	.325"	.050"	78	ControlCut
Stihl									
A074	540389	12"	124 MLE A074	Single Rivet	90PX	3/8" LP	.043"	44	AdvanceCut
	540390	14"	144 MLE A074	Single Rivet	90PX	3/8" LP	.043"	50	AdvanceCut
	557501	14"	140 SDE A074	Single Rivet	91PX	3/8" LP	.050"	50	AdvanceCut
	557502	16"	160 SDE A074	Single Rivet	91PX	3/8" LP	.050"	55	AdvanceCut
	578779	16"	163 PXLB A074	ControlCut	22BPX	.325"	.063"	62	ControlCut
	578780	18"	183 PXLB A074	ControlCut	22BPX	.325"	.063"	68	ControlCut
D025	579775	16"	163 VXLG D025	VersaCut™	22BPX	.325"	.063"	67	ControlCut
	579776	18"	183 VXLG D025	VersaCut	22BPX	.325"	.063"	74	ControlCut
	579777	20"	203 VXLG D025	VersaCut	22BPX	.325"	.063"	81	ControlCut
Dolmar, Efco, Husqvarna, Jonsered, Makita, Redmax									
K095	579778	16"	168 VXLG K095	VersaCut	21BPX	.325"	.058"	66	ControlCut
	579809	18"	188 VXLG K095	VersaCut	21BPX	.325"	.058"	72	ControlCut
	579810	20"	208 VXLG K095	VersaCut	21BPX	.325"	.058"	78	ControlCut
	578782	16"	168 PXLB K095	ControlCut	21BPX	.325"	.058"	66	ControlCut
	578783	18"	188 PXLB K095	ControlCut	21BPX	.325"	.058"	72	ControlCut

Dolmar, Husqvarna, Jonsered, Makita, Poulan Pro, Shindaiwa									
K095	578482	16"	160 TXLB K095	SpeedCut™	95TXL	.325"	.050"	66	SpeedCut
	578764	18"	180 TXLB K095	SpeedCut	95TXL	.325"	.050"	72	SpeedCut
D009	580120	20"	200 VXLH D009	VersaCut	72EXL	3/8"	.050"	72	PowerCut™
	580124	16"	168 VXLH D009	VersaCut	73EXL	3/8"	.058"	60	PowerCut
	580126	18"	188 VXLH D009	VersaCut	73EXL	3/8"	.058"	68	PowerCut
	580121	20"	208 VXLH D009	VersaCut	73EXL	3/8"	.058"	72	PowerCut
Stihl									
A074	578766	16"	160 TXLB A074	SpeedCut	95TXL	.325"	.050"	62	SpeedCut
	578767	18"	180 TXLB A074	SpeedCut	95TXL	.325"	.050"	68	SpeedCut
D025	580123	20"	200 VXLH D025	VersaCut	72EXL	3/8"	.050"	72	PowerCut
	580125	16"	163 VXLH D025	VersaCut	75EXL	3/8"	.063"	60	PowerCut
	580741	18"	183 VXLH D025	VersaCut	75EXL	3/8"	.063"	66	PowerCut
	580122	20"	203 VXLH D025	VersaCut	75EXL	3/8"	.063"	72	PowerCut

Oregon® Guide Bar & Chain Combos by Motor Mount Number – Discontinued

Available while supplies last
Please check with your distributor for availablily.

Stihl

Bar Mount	Combo Part No.	Gude Bar Length	Gude Bar Part №	Gude Bar Family	Saw Chain Type	Saw Chain Pitch	Saw Chain Gauge	Saw Chain Drive Links	Saw Chain Family
A074	*540391*	16"	163 SLB A074	Pro-Lite®	22BPX	.325"	.063"	62	
	540392	18"	183 SLB A074	Pro-Lite	22BPX	.325"	.063"	68	
D025	*105705*	16"	163 SLG D025	Pro-Lite	22BPX	.325"	.063"	67	
	105706	18"	183 SLG D025	Pro-Lite	22BPX	.325"	.063"	74	
	540393	20"	203 SLG D025	Pro-Lite	22BPX	.325"	.063"	81	

Dolmar, Efco, Husqvarna, Jonsered, Makita, Redmax

Bar Mount	Combo Part No.	Gude Bar Length	Gude Bar Part №	Gude Bar Family	Saw Chain Type	Saw Chain Pitch	Saw Chain Gauge	Saw Chain Drive Links	Saw Chain Family
K095	*105712*	16"	168 SLG K095	Pro-Lite	21BPX	.325"	.058"	66	
	105713	18"	188 SLG K095	Pro-Lite	21BPX	.325"	.058"	72	
	105714	20"	208 SLG K095	Pro-Lite	21BPX	.325"	.058"	78	
	108579	16"	160 MLB K095	Pro-Am®	*95VPX*	.325"	.050"	66	
	108580	18"	180 MLB K095	Pro-Am	*95VPX*	.325"	.050"	72	

Dolmar, Husqvarna, Jonsered, Makita, Poulan Pro, Shindaiwa

Bar Mount	Combo Part No.	Gude Bar Length	Gude Bar Part №	Gude Bar Family	Saw Chain Type	Saw Chain Pitch	Saw Chain Gauge	Saw Chain Drive Links	Saw Chain Family
D009	*109121*	20"	200 SLH D009	Pro-Lite	72LGX	3/8"	.050"	72	
	109116	16"	168 SLH D009	Pro-Lite	73LGX	3/8"	.058"	60	
	109117	18"	188 SLH D009	Pro-Lite	73LGX	3/8"	.058"	68	
	109118	20"	208 SLH D009	Pro-Lite	73LGX	3/8"	.058"	72	

Stihl

Bar Mount	Combo Part No.	Gude Bar Length	Gude Bar Part №	Gude Bar Family	Saw Chain Type	Saw Chain Pitch	Saw Chain Gauge	Saw Chain Drive Links	Saw Chain Family
D025	*106032*	20"	200 SLH D025	Pro-Lite	72LGX	3/8"	.050"	72	
	110782	16"	163 SLH D025	Pro-Lite	73LGX	3/8"	.058"	60	
	110783	18"	183 SLH D025	Pro-Lite	73LGX	3/8"	.058"	66	
	110784	20"	203 SLH D025	Pro-Lite	73LGX	3/8"	.058"	72	

Part numbers printed in *red italics* have been obsoleted. Contact your authorized Oregon distributor for availability.

SAW CHAIN

PowerCut™ 70-Series EXL . . . . . FOR 104–105
SpeedCut™ System . . . . . FOR 106–107
Features and Terminology . . . . . FOR 108–110
Product Families . . . . . FOR 111–113
PowerCut™ Saw Chains. . . . . FOR 114–118
SpeedCut™ Saw Chains . . . . . FOR 120–121
VersaCut™ Saw Chains . . . . . FOR 122–123
ControlCut™ Saw Chains . . . . . FOR 124–125
DuraCut™ Saw Chain . . . . . FOR 126–128
RipCut™ Saw Chains . . . . . FOR 130–131
Sculptor™ Saw Chains . . . . . FOR 132
AdvanceCut™ Saw Chains . . . . . FOR 134–135
PowerSharp® Saw Chains . . . . . FOR 136–137
Cross-Reference Chart . . . . . FOR 138–139
Sharpening and Grinding Angles . . FOR 140–141
Replacement Parts . . . . . FOR 142–143
Wear and Troubleshooting . . . . . FOR 144–146
Drive Link Counts . . . . . .FOR 147

PowerCut™ 70-Series EXL

An Evolution to the Popular LGX 3/8" Professional Saw Chain

REPUTATIONS ARE BUILT WITH EVERY CUT

Keep Your Edge

With every cut, your reputation is on the line. That's why we've spent generations engineering the sharpest, fastest professional cutting systems in the world. Day in and day out, the PowerCut 70-Series EXL full chisel cutters help you power through timber with speed, efficiency, and precision.

Designed to maximize every cut, our proprietary cutter technology gives users a sharper, more durable cutting edge that provides increased cutting performance with less effort. We're constantly raising the bar, pushing ourselves to exceed the demands of the professionals who rely on us to make the job feel less like work.

Advantages

- Multi-axis grind technology for superior performance, sharpness, and consistency
- Reshaped cutter powers through timber with speed, efficiency, and precision
- Designed to reduce the force applied by the operator
- Engineered to utilize the power of today's professional saws
- LubriTec™ keeps your saw chain and guide bar oiled for less friction and longer life
- Gold Loop Start Indicator makes sharpening easier with start and stop identification

÷2

3/8"

.050"
.058"
.063"

LubriTec™ OILING SYSTEM

No.	Gauge	Standard Sequence
72EXL	.050"	
73EXL	.058"	
75EXL	.063"	

Skip Sequence	
72EXJ	.050"
73EXJ	.058"
75EXJ	.063"

Saw Size

50–100 cc

Bar Lengths

16–36" (40–90 cm)

SpeedCut™

95-Series .325” Cutting System

A BETTER SAW STARTS HERE

Get your cutting done easier and faster. Our SpeedCut™ System works as hard as you do. Made for mid-size saws (≤ 55cc). The narrow kerf guide bar and saw chain need less power for faster cuts in most conditions.

SpeedCut ™ 95-Series .325 Cutting System

The Narrow Kerf Advantage

A narrow kerf means faster cuts because less wood is displaced.

Top performance comes from pairing the narrow kerf 95TXL saw chain with a specially built narrow kerf guide bar. Light-weight and efficient, the SpeedCut System cuts faster and better on mid-size chainsaws.

Always use bars designed for narrow kerf saw chain. Look for this icon .

95TXL Saw Chain

FASTER*
Get a faster, easier cut with a re-shaped cutting surface and narrow kerf design

SHARPER*
Sharper, more durable cutting edge from a new precision grind and optimized cutting angle

EASIER*
An easier to sharpen chain, with the cutting surface matched to the file. More indicators help you spot the recommended filing angles

- LubriTec™ keeps guide bar rails and rivet joints oiled, for less wear and longer life
- Replaces 95VPX

Guide Bars

LIGHTER**
Up to 20% lighter, for more control and less fatigue with a light-weight aluminum core

STRONGER**
Stiffer and stronger with aerospace bonding technology

LONGER LASTING**
More durable on the job, from a redesigned nose with new parts and materials. Harder bar rails designed to last longer.

- Better chain retention and less wear via precision rail groove design
- LubriTec™ keeps the chain drive link and chain rivet joints oiled, for less wear and longer life

÷2
.325"

.050"

13"
15"
16"
18"
20"

LubriTec™ OILING SYSTEM

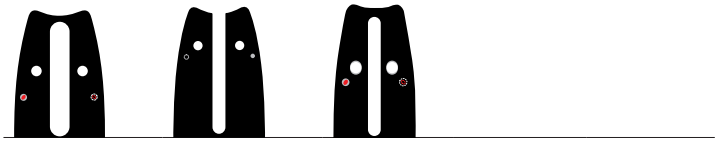

D025
Stihl®

A074
Stihl®

K095
Dolmar®
Husqvarna®
Partner®
Poulan®
Mcculloch®
Makita®
Homelite®
Jonsered®

*When compared to Oregon 95VPX saw chain. ** When compared to equivalent Oregon Pro-Lite guide bars.

Oregon , LubriTec , SpeedCut , Witness Mark and the Narrow Kerf icon are trademarks of Blount, Inc. All other marks are property of their respective owners.

Oregon Features – Lubrication

LubriTec™
OILING SYSTEM

You want tools to work smarter and last longer. We designed LubriTec to deliver the best possible lubrication for your saw chain. Keeping lubrication where it's needed most means a longer lasting saw chain and guide bar and less down time. Here's how it works:

LubriTec for the Chain*

- Lubricant is held inside LubriTec reservoirs
- Oil flows freely into and around the saw chain parts and the guide bar. Oil is held in the high-friction zone where the saw chain and guide bar groove walls make contact.
- The presence of lubricant lowers friction during the start-up period before the saw's oiling system reaches its peak function
- LubriTec strengthens the saw chain tie straps and reduces their tendency to flex during operation, making a more stable and durable saw chain

LubriTec for the Guide Bar*

- Our LubriTec guide bar dam is cleverly designed to keep lubricant where it's needed most. It looks like a small barrier and is found in the bottom of the guide bar's groove, just behind the oil hole. It both increases available oil and reduces oil hole plugging. Resulting in better overall lubrication.
- The LubriTec angled oil hole virtually eliminates guide bar oil hole plugging. The oil hole slopes up toward the top of the guide bar and forward toward the nose. It's approximately 40% smaller in diameter than a standard hole, increasing velocity as oil enters the guide bar. It also helps clear sawdust and debris away from the hole during operation.

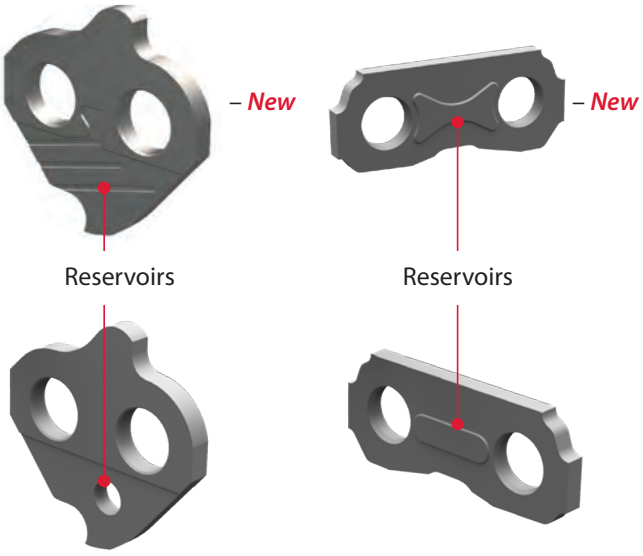

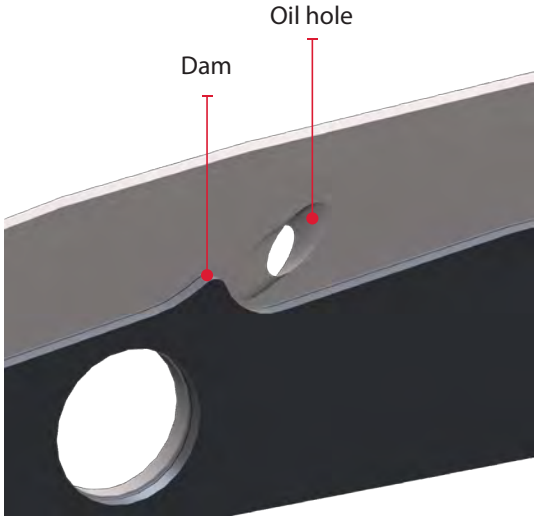

***Combination of features will vary by chain and bar products**

Oregon Features – Saw Chain

Low Vibration

Less vibration equals more comfort. We wanted to lessen vibration-induced white finger (VWF), so we created a small space between the saw chain and the guide bar. A lot of the energy gets dissipated by the saw chain, acting as a shock absorber. It never reaches the guide bar, the saw — or most important — the operator. Our low vibration design reduces vibrations by 25% or more.

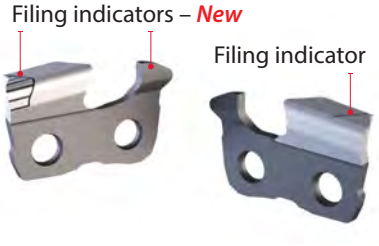

Filing Indicators

Your sharpening made easier and more accurate. Special filing marks show the best top-plate angle. Lines make it easier for filing the correct top-plate angle and help maintain equal cutter lengths. Filing indicators show you when cutters have reached the end of their life. Cutters should not be sharpened beyond the line.

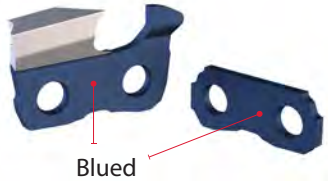

Blued Components

Our Blued Components give you high-quality resistance to corrosion with the presence of protective oil. A precise and controlled tempering process results in a blue surface, designating our best-in-class saw chain.

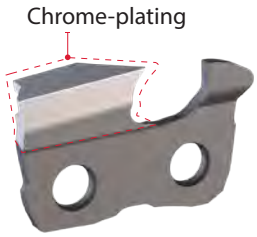

Chrome-Plated Cutters

Your chain stays sharper, longer. Oregon electroplates a layer of industrial hard chrome to all our saw chain cutters. Chrome delivers a harder surface and better wear resistance. So you spend more time cutting and less time filing or grinding the chain.

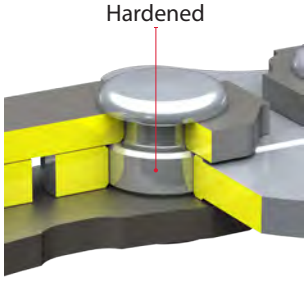

Hardened Rivets

For a longer working saw chain, Oregon induction hardens and quenches all saw chain rivets, delivering a high-quality, load-bearing surface that resists wear and improves strength. Less wear and chain stretch means fewer chain tension adjustments.

Saw Chain

Saw Chain Terminology

Parts of Saw Chain

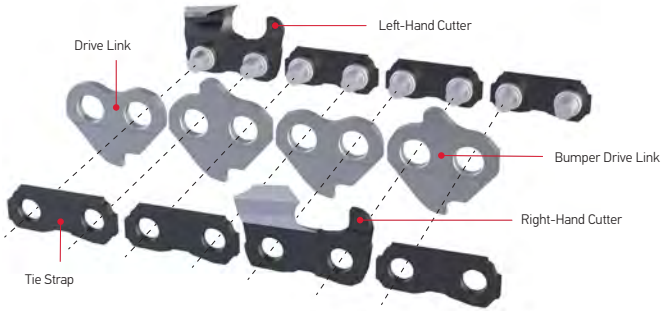

Parts of a Cutter

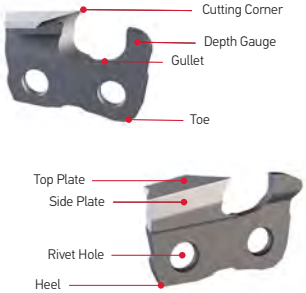

Parts of a Rivet

Chain Cutter Sequence Terminology

Standard

Semi-skip

Skip

Why Choose "Semi-Skip" or "Skip" Sequence Chain?

Consumer users of chainsaws will probably never need to use a semi-skip or skip sequence chain. However, professional or commercial chainsaw operators who use their saws frequently and who use longer bars may prefer a semi-skip or skip chain for these reasons:

- Fewer cutters to sharpen makes sharpening faster and easier
- Greater clearance for better chip flow – the larger the wood being cut and the longer the bar used, the more important good chip flow becomes
- The type of wood being cut and other factors will affect the choice of the chain type and chain sequence, but with the full-size 3/8" pitch and .404" pitch chains, preferred by professional and commercial operators who use longer bars, the following general guidelines will be useful

Bar Length considerations for semi-skip and skip chain:

Chain Sequence	Recommended Bar Lengths
Standard	Up to 24" (60 cm)
Semi-Skip (Square Ground only)	24" to 32" (60 – 80 cm)
Skip	32" and longer (80 cm+)

Kickback Reducing Features – Icon Key

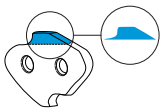
Bumper Drive Link

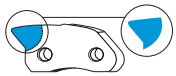
Bumper Tie Strap

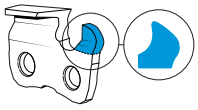
Ramped Depth Gauge

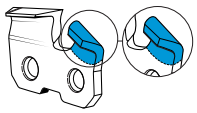
Wide-Track Depth Gauge

Product Families

Oregon understands that the needs of woodcutters – professionals and novices – are as diverse as the terrains and environments in which they work.

We have organized our saw chains into product families with key characteristics that different users will value. These product families will help ensure that you choose the right chain based on your everyday needs — helping to make understanding the differences between our chains effortless.

To help easily identify our tiers of products, packaging is differentiated by color. Product within families meeting the needs of occasional users will be indicated by gray packaging. Product families targeted at demanding professional users will be indicated by black packaging.

Chain for High-Performance Saws

PowerCut™
The ultimate saw chain for loggers and skilled forest workers who use high performance saws. Full chisel cutters power through timber with speed, efficiency, and precision.

SpeedCut™
Faster, cutting performance for wood-cutting professionals who use mid-size saws under 55cc. Narrow kerf system requires less power to cut through high volumes of wood quickly and easily.

VersaCut™
Designed for landowners and tree-cutting professionals who require a multi-purpose, high performing saw chain. Uses cutters designed for maximum durability and versatility.

ControlCut™
Ideal for wood cutting professionals looking for a fully featured cutting system that delivers smooth cutting and reduced kickback. Easy to maintain saw chain, with a forgiving sharpening profile.

DuraCut™
Made for woodcutters working in abrasive and tough environments. Advanced plating process with extra layers of chrome extends sharpness up to three times longer than conventional saw chain.

RipCut™
Created specifically for chain-type sawmills. Produces smooth ripping cuts with supreme efficiency to make precise boards and planks.

Chain with Reliable Performance

AdvanceCut™
Perfect for homeowners cutting trees on their property and for landscape professionals who occasionally cut wood. User-friendly because of the low kickback designs.

Saw Chain Pitch | Electric → 100 CC | Saw Chain Number by Gauge

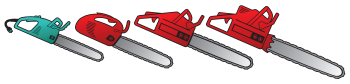

Saw Chain Pitch		.043"	.050"	.058"	.063"
1/4"			25		
3/8" Low Profile™		90	91		
.325"			20 95	21	22
3/8"			72	73	75
.404"					27 59 68

Chain images are to actual size.

Chain for High-Performance Saws

Chain with Reliable Performance

PowerCut™	SpeedCut™	VersaCut™	ControlCut™	DuraCut™	RipCut™		AdvanceCut™	
Maximum speed with precision cutting for high performance saws	Faster, Sharper, and Easier to maintain; requires less power for faster cuts	Multi-purpose use, stays sharp longer and is easier to file	Smooth cutting with reduced kickback features	Maximum sharpness durability for abrasive conditions; file with standard tools	Effective cutter design for saw mill ripping cuts	**Specialty Products**	Durability and performance you can count on, with reduced kickback features	**Specialty Products**
			25AP			*25A* 25F		
		91VXL	91PXL	M91VXL			90PX 91PX	91PS
20LPX 21LPX 22LPX	95TXL *95VPX*		20BPX 21BPX 22BPX	M20BPX M21BPX M22BPX *M20LPX* *M21LPX* *M22LPX*				
72EXL, EXJ 73EXL, EXJ 75EXL, EXJ *72LGX, JGX* *73LGX, JGX* *75LGX, JGX* 72LPX, JPX 73LPX 75LPX 72CL, CK, CJ 73CL, CK 75CL, CK, CJ		72DPX, APX 73DPX 75DPX		M72DPX M73DPX M75DPX *M72LPX* *M73LPX* *M75LPX*	72RD 73RD 75RD		72V 73V 75V	
68LX, JX 68CL, CJ 59L, J		27X, AX			27R 27RX			

Chain part numbers printed in *red italics* have been obsoleted. Contact your authorized Oregon distributor for availability.

PowerCut™

Highly-experienced loggers and skilled forest workers require precision, power, and speed to get through a hard day's work.

Oregon's PowerCut saw chain possesses all of those qualities. PowerCut uses full chisel cutters that cut quickly through timber with precise cuts. Available in two cutting styles: traditional round ground and square ground options for more efficient cutting when logging the largest timber.

If you require top performance during a long day of logging, then PowerCut is the right cutting system for you.

• Speed • Power • Precision

PowerCut™

20, 21, 22 LPX

An ideal chain for professional woodcutters who use .325" pitch saws. Low-vibration, full chisel cutters offer top performance. Offset depth gauges prevent cutters from driving into the sidewall of the cut, offering a smoother cut.

Features and Benefits

- LubriTec™ keeps your saw chain and guide bar oiled, for less friction and longer life
- Blued Cutters deliver high-quality protection against corrosion
- Top-Plate Filing Indicators makes accurate sharpening easie
- Our exclusive OCS-01 Steel delivers greater durability

No.	Gauge	Standard Sequence
20LPX	.050"	
21LPX	.058"	
22LPX	.063"	

.325"

Saw Size
38–62 cc

Bar Lengths
13–20" (32–50 cm)

Chisel	Kickback Safety
	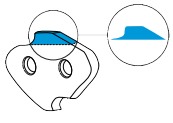

PowerCut™

72, 73, 75 EXL
72, 73, 75 EXJ

With a reshaped cutter and multi-axis grind technology for superior performance, sharpness and consistency; now the top option for professional woodcutters who use 3/8" pitch saws (replaces 72, 73, 75LGX & JPX). This low-vibration, full chisel cutter chain is engineered to utilize the power of today's professional saws and reduce the force applied by the operator. Designed to maximize every cut, our proprietary cutter technology gives users a sharper, more durable cutting edge that provides increased cutting performance with less effort.

Features and Benefits

- LubriTec™ keeps your saw chain and guide bar oiled, for less friction and longer life
- Blued Cutters deliver high-quality protection against corrosion
- Expanded Top-Plate Filing Indicators and depth gauge Filing Indicators area make accurate sharpening easier
- Gold Loop Start Indicator makes sharpening easier with start and stop identification
- Our exclusive OCS-01 Steel delivers greater durability

No.	Gauge	Standard Sequence
72EXL 73EXL 75EXL	.050" .058" .063"	
		Skip Sequence
72EXJ 73EXJ 75EXJ	.050" .058" .063"	

3/8"

Saw Size
50–100 cc

Bar Lengths
16–36" (40–90 cm)

Chisel

Kickback Safety

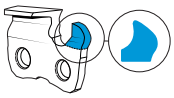

72, 73, 75 LGX
72, 73, 75 JGX

An ideal chain for professional woodcutters who use 3/8" pitch saws. Low-vibration, full chisel cutters offer top performance. Offset depth gauges prevent cutters from driving into the sidewall of the cut, offering a smoother cut.

Features and Benefits

- LubriTec™ keeps your saw chain and guide bar oiled, for less friction and longer life
- Blued Cutters deliver high-quality protection against corrosion
- Top-Plate Filing Indicators makes accurate sharpening easier
- Our exclusive OCS-01 Steel delivers greater durability

No.	Gauge	Standard Sequence
72LGX *73LGX* *75LGX*	.050" .058" .063"	
		Skip Sequence
72JGX *73JGX* *75JGX*	.050" .058" .063"	

3/8"

Saw Size
50–100 cc

Bar Lengths
16–36" (40–90 cm)

Chisel

Kickback Safety

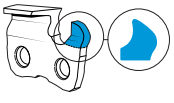

Chain part numbers printed in *red italics* have been obsoleted. Contact your authorized Oregon distributor for availability.

PowerCut™

72, 73, 75 CL
72, 73, 75 CK
72, 75 CJ

Work more efficiently with 72, 73, 75 CL & CK — 72, 75 CJ chains. Ideal for high-production cutting with long bars and 3/8" pitch saws. This is the square ground version of our LGX series chain.

Features and Benefits

- LubriTec™ keeps your saw chain and guide bar oiled, for less friction and longer life
- Blued Cutters deliver high-quality protection against corrosion
- Top-Plate Filing Indicators makes accurate sharpening easier
- Our exclusive OCS-01 Steel delivers greater durability

3/8"

Saw Size
50–100 cc

Bar Lengths
16–36" (40–90 cm)

Chisel

Kickback Safety

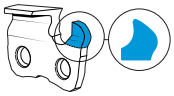

No.	Gauge	Standard Sequence
72CL 73CL 75CL	.050" .058" .063"	
		Semi-Skip Sequence
72CK 73CK 75CK	.050" .058" .063"	
		Skip Sequence
72CJ 75CJ	.050" .063"	

72, 73, 75 LPX
72 JPX

An ideal chain for professional woodcutters who use 3/8" pitch saws. Low-vibration, full chisel cutters offer top performance. Offset depth gauges prevent cutters from driving into the sidewall of the cut, offering a smoother cut.

Features and Benefits

- LubriTec™ keeps your saw chain and guide bar oiled, for less friction and longer life
- Blued Cutters deliver high-quality protection against corrosion
- Top-Plate Filing Indicators makes accurate sharpening easier
- Our exclusive OCS-01 Steel delivers greater durability

3/8"

Saw Size
50–100 cc

Bar Lengths
16–36" (40–90 cm)

Chisel

Kickback Safety

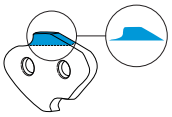

No.	Gauge	Standard Sequence
72LPX 73LPX 75LPX	.050" .058" .063"	
		Skip Sequence
72JPX	.050"	

Chain part numbers printed in *red italics* have been obsoleted. Contact your authorized Oregon distributor for availability. *Available in DuraCut™ chain version, page FOR 122*

PowerCut™

68 LX
68 JX

A top performing, heavy-duty, big-timber chain, for professionals who use large saws. Full chisel cutters offer top performance.

Features and Benefits

- LubriTec™ keeps your saw chain and guide bar oiled, for less friction and longer life
- Blued Cutters deliver high-quality protection against corrosion
- Top-Plate Filing Indicators makes accurate sharpening easier
- Our exclusive OCS-01 Steel delivers greater durability

No.	Gauge	Standard Sequence
68LX	.063"	
		Skip Sequence
68JX	.063"	

.404"

Saw Size
65 cc & Larger

Bar Lengths
20" (50 cm) & Larger

Chisel **Kickback Safety**

68 CL
68 CJ

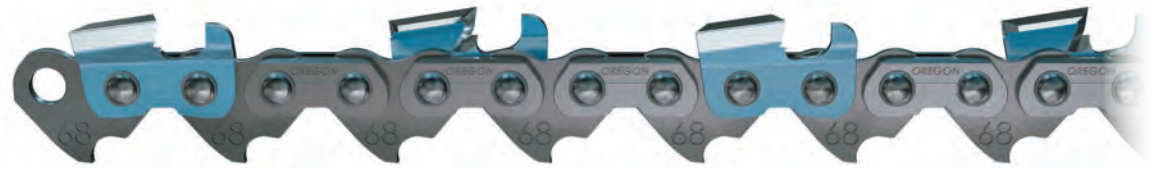

68 CL & CJ helps you get more done. Ideal for high-production cutting with long bars and .404"- pitch saws. This is the square ground version of our 68LX.

Features and Benefits

- LubriTec™ keeps your saw chain and guide bar oiled, for less friction and longer life
- Blued Cutters deliver high-quality protection against corrosion
- Top-Plate Filing Indicators makes accurate sharpening easier
- Our exclusive OCS-01 Steel delivers greater durability

No.	Gauge	Standard Sequence
68CL	.063"	
		Skip Sequence
68CJ	.063"	

.404"

Saw Size
65 cc & Larger

Bar Lengths
20" (50 cm) & Larger

Chisel **Kickback Safety**

PowerCut™

59 L
59 J

A big-timber, heavy-duty chain for professionals who use large saws. Full chisel cutters offer top performance. Get less kickback without the added weight or bulk of other methods because of the depth gauge design.

Features and Benefits

- LubriTec™ keeps your saw chain and guide bar oiled, for less friction and longer life
- Top-Plate Filing Indicators makes accurate sharpening easier
- Our exclusive OCS-01 Steel delivers greater durability

No.	Gauge	Standard Sequence
59L	.063"	
		Skip Sequence
59J	.063"	

.404"

Saw Size
65 cc & Larger

Bar Lengths
20" (50 cm) & Larger

Chisel

Kickback Safety

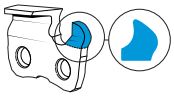

SpeedCut™

Whether you're an arborist or a firewood cutter, high volumes of wood require speed, efficiency, and a strong performing saw chain to get the job done right. Oregon's SpeedCut exemplifies the efficiency, speed, and top performance of the entire SpeedCut cutting system.

SpeedCut is easy to use because it uses a narrow kerf cutting system and is easy to maintain. Narrow kerf requires less power than other cutting systems, making more efficient cuts that allows you to finish the job quickly and easily. Professionals will appreciate SpeedCut's unbeatable performance, and will love how easy it is to maintain.

• Efficiency • Fast • Easy

Narrow Kerf

95 TXL

Work faster, sharper, easier, with a more efficient saw chain. Ideal for arborists and property owners who want top performance. 95TXL is for saws up to 55 cc. (Replaces 95VPX.) Oregon® SpeedCut 95TXL narrow kerf cutting systems are more efficient, needing less power from the saw than standard cutting systems. Low-vibration, Micro Chisel cutters have small-radius working corners for excellent performance and easy maintenance. Get a faster, easier cuts with a reshaped cutting surface. A sharper, more durable cutting edge from a new precision grind and optimized cutting angle. Always use SpeedCut narrow kerf chain in combination with SpeedCut or other narrow kerf bars.

Features and Benefits

- LubriTec™ keeps your saw chain and guide bar oiled, for less friction and longer life
- Blued Cutters deliver high-quality protection against corrosion
- Expanded Top-Plate Filing Indicators and depth gauge Filing Indicators area make accurate sharpening easier
- Gold Loop Start Indicator makes sharpening easier with start and stop identification
- Our exclusive OCS-01 Steel delivers greater durability

No.	Gauge	Standard Sequence
95TXL	.050"	

.325"

Saw Size

38–55 cc

Bar Lengths

13–20" (32–50 cm)

Micro Chisel

Kickback Safety

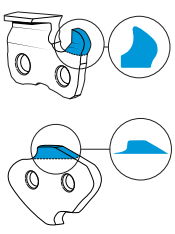

See pages FOR 106–107 for more infomation on the SpeedCut system.

SpeedCut™

Narrow Kerf

95 VPX

A more efficient chain, 95VPX is ideal for arborists and property owners seeking top performance. For saws up to 55 cc. Our narrow kerf cutting systems are more efficient, needing less power from the saw than standard cutting systems. Always use narrow kerf chain in combination with narrow kerf bars. Low-vibration, Micro Chisel® cutters have small-radius working corners for excellent performance and easy maintenance.

Features and Benefits

- LubriTec™ keeps your saw chain and guide bar oiled, for less friction and longer life
- Blued Cutters deliver high-quality protection against corrosion
- Top-Plate Filing Indicators makes accurate sharpening easier
- Our exclusive OCS-01 Steel delivers greater durability

No.	Gauge	Standard Sequence
95VPX	.050"	

.325"

Saw Size

38–55 cc

Bar Lengths

13–18" (32–45 cm)

Micro Chisel

Kickback Safety

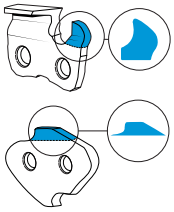

Coming Soon!

SpeedCut Nano 80 TXL

Available in 2019, SpeedCut Nano 80 TXL is an innovative new cutting system designed specifically for today's high-performance battery-powered and compact light-weight gas chainsaws. 80 TXL will be Oregon's most efficient saw chain for 1-3 HP chainsaws. Our patented design includes the following features:

- Increased cutting speed
- Longer run time per charge for battery saws
- Reduced tendency to stall in the cut
- Multi-axis grind technology for exceptionally clean cuts

SpeedCut Nano 80 TXL is part of an all-NEW .325" Low Profile™ cutting system – saw chain, guide bar, and sprocket – which must be used together and are not compatible with any other existing cutting systems.

New Cutting System

SpeedCut Nano 80 TXL is the latest cutting system innovation from Oregon, specifically engineered to deliver maximum performance and efficiency for battery-powered and 20–35cc gas chainsaws.

A BETTER SAW STARTS HERE

VersaCut™

Arborists, landscapers, and loggers have encountered every type of tree, shrub, stump, limb, and twig. If it's outdoors and made of wood, you've probably cut or maintained it.

Oregon's VersaCut was designed for you. VersaCut delivers both versatility and durability. The semi-chisel and Micro Chisel® cutters makes sure you stay sharp longer for all-day cutting.

VersaCut is also easy to maintain; and it stays sharp longer in a variety of cutting conditions.

Clean wood or dirty wood, frozen or green, VersaCut is the smart choice for tree professionals.

• Easy • Durable • Versatile

VersaCut

91 VXL

91VXL is a high-performance, Low Profile™ chain. It's ideal for professional arborists and orchardists who use light-weight chain-saws. Cutter top-plates are 33% longer than standard 91 cutters. Low vibration, semi-chisel cutters provide an aggressive cutting edge with a forgiving sharpening profile and good stay-sharp.

Features and Benefits

- LubriTec™ keeps your saw chain and guide bar oiled, for less friction and longer life
- Blued Cutters deliver high-quality protection against corrosion

No.	Gauge	Standard Sequence
91VXL	.050"	

3/8" Low Profile™

Saw Size

Up to 42 cc

Bar Lengths

Up to 18" (45 cm)

Semi-Chisel

Kickback Safety

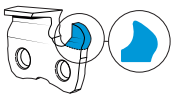

VersaCut™

72, 73, 75 DPX
72 APX

An ideal choice for professional users who cut in a variety of conditions. Easy to maintain. Low-vibration, semi-chisel cutter designs work fast. This design is typically more tolerant of sharpening errors than chisel cutters.

Features and Benefits

- LubriTec™ keeps your saw chain and guide bar oiled, for less friction and longer life
- Blued Cutters deliver high-quality protection against corrosion
- Top-Plate Filing Indicators makes accurate sharpening easier
- Our exclusive OCS-01 Steel delivers greater durability

No.	Gauge	Standard Sequence
72DPX 73DPX 75DPX	.050" .058" .063"	
		Skip Sequence
72APX	.050"	

3/8"

Saw Size
50–100 cc

Bar Lengths
16–36" (40–90 cm)

Semi-Chisel

Kickback Safety

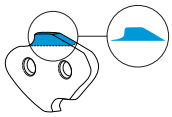

27 X
27 AX

This is a heavy-duty, high-performance chain for professionals using large saws. Ideal for those who prefer the durability and easy maintenance of Micro Chisel® cutters. Micro Chisel cutters have small-radius working corners for excellent performance and easy maintenance.

Features and Benefits

- LubriTec keeps your saw chain and guide bar oiled, for less friction and longer life
- Blued Cutters deliver high-quality protection against corrosion
- Our exclusive OCS-01 Steel delivers greater durability

No.	Gauge	Standard Sequence
27X	.063"	
		Skip Sequence
27AX	.063"	

.404"

Saw Size
65 cc & Larger

Bar Lengths
20" (50 cm) & Larger

Micro Chisel

Kickback Safety

ControlCut™

If you own or maintain a property, you will inevitably manage a lot of smaller jobs. They add up fast. Oregon's ControlCut saw chain is ideal for all light-duty work, because it gives you a smooth cut every single time and it's easy to maintain.

ControlCut has the longevity for bigger jobs, too. ControlCut's semi-chisel and Micro Chisel® cutting styles are ideal for property owners who need to cut the occasional tree limb, as well as experienced landscapers and orchardists who cut trees for a living.

ControlCut is low maintenance, and it stays sharper so you get jobs done quickly and easily.

• Smooth • Controlled • Forgiving

ControlCut™

25 AP

Get your smallest jobs done just right. 25AP is light-weight, smooth chain, ideal for pruning — our Micro Chisel® cutters have small-radius working corners for excellent performance, and they are easy to maintain. The 25AP is small and light-weight, making it easy to use and maneuver.

• Available in Sculptor™ chain version – see page FOR 125

No.	Gauge	Standard Sequence
25AP	.050"	

1/4"

Saw Size
Up to 38 cc

Bar Lengths
Up to 16" (40 cm)

Micro Chisel **Kickback Safety**

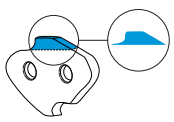

ControlCut™

91 PXL

A high-performance Low Profile chain, 91PXL is ideal for property owner or professionals using light-weight chainsaws, who prefer low kickback. Cutter top-plates are 33% longer than standard 91 cutters. The low vibration, low kickback semi-chisel cutters give you an aggressive cutting edge. 91PXL also offers a forgiving sharpening profile and good stay-sharp. Bumper drive link paired with depth gauge design offers reduced kickback with strong performance.

Features and Benefits

- LubriTec™ keeps your saw chain and guide bar oiled, for less friction and longer life
- Blued Cutters deliver high-quality protection against corrosion

No.	Gauge	Standard Sequence
91PXL	.050"	

3/8" Low Profile™

Saw Size
Up to 42 cc

Bar Lengths
Up to 18" (45 cm)

Semi-Chisel

Kickback Safety

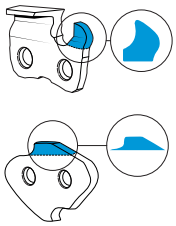

20, 21, 22 BPX

An ideal choice for regular users of saws such as property owners and landscapers. The low-vibration, Micro Chisel® cutters have small-radius working corners for excellent performance and easy maintenance. Low kickback design.

Features and Benefits

- LubriTec keeps your saw chain and guide bar oiled, for less friction and longer life
- Blued Cutters deliver high-quality protection against corrosion
- Top-Plate Filing Indicators makes accurate sharpening easier
- Our exclusive OCS-01 Steel delivers greater durability

No.	Gauge	Standard Sequence
20BPX	.050"	
21BPX	.058"	
22BPX	.063"	

.325"

Saw Size
38–62 cc

Bar Lengths
13–20" (32–50 cm)

Micro Chisel

Kickback Safety

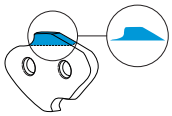

DuraCut™ (formerly MultiCut™)

Woodcutters face challenging environments all the time. Fire-damaged trees can be unstable and require extra care. Trees in sandy environments, like desert ironwood, are notoriously tough on saw chains.

Oregon's DuraCut is made for these environments. DuraCut has an advanced plating process with extra layers of chrome that allows you to cut up to three times longer than conventional saw chain.

Working a site with standard filing tools? No problem. You can use your usual files to sharpen the chain and get back to work. DuraCut is the durable solution for your toughest woodcutting jobs.

• Durable • Tough

DuraCut™

M91 VXL

Work longer in dirty conditions with this more durable version of our aggressive 91VXL chain; cuts up to 3 times longer. 91VXL is a high-performance Low Profile™ chain. Low vibration, semi-chisel cutters provide an aggressive cutting edge with a forgiving sharpening profile. Maintain with standard maintenance tools.

Features and Benefits

- Extra heavy-duty chrome and an advanced plating process enables exceptional durability and stay-sharp
- LubriTec™ keeps your saw chain and guide bar oiled, for less friction and longer life
- Blued Cutters deliver high-quality protection against corrosion

No.	Gauge	Standard Sequence
M91VXL	.050"	

3/8" Low Profile™

Saw Size
Up to 42 cc

Bar Lengths
Up to 18" (45 cm)

Semi-Chisel

Kickback Safety

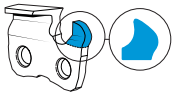

DuraCut™

M20, 21, 22 BPX

Cut effectively in dirty and abrasive conditions with this more durable version of our high performing .325" pitch BPX chain; cuts up to 3 times longer. The low-vibration, Micro Chisel® cutters have small-radius working corners for excellent performance and easy maintenance. Low kickback design. Maintain with standard maintenance tools.

Features and Benefits

- Extra heavy-duty chrome and an advanced plating process enables exceptional durability and stay-sharp
- LubriTec™ keeps your saw chain and guide bar oiled, for less friction and longer life
- Blued Cutters deliver high-quality protection against corrosion
- Top-Plate Filing Indicators makes accurate sharpening easier
- Our exclusive OCS-01 Steel delivers greater durability

.325"

Saw Size

38–62 cc

Bar Lengths

13–20" (32–50 cm)

Micro Chisel

Kickback Safety

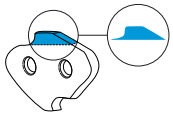

No.	Gauge	Standard Sequence
M20BPX	.050"	
M21BPX	.058"	
M22BPX	.063"	

M72, 73, 75 DPX

Cut more between sharpenings in the toughest, dirtiest, or most abrasive conditions with this more durable version of our high-performing 3/8" pitch DPX chain; cuts up to 3 times longer. Easy to maintain. Low-vibration, semi-chisel cutter designs perform strong for professional users. Maintain with standard maintenance tools.

Features and Benefits

- Extra heavy-duty chrome and an advanced plating process enables exceptional durability and stay-sharp
- LubriTec™ keeps your saw chain and guide bar oiled, for less friction and longer life
- Blued Cutters deliver high-quality protection against corrosion
- Top-Plate Filing Indicators makes accurate sharpening easier
- Our exclusive OCS-01 Steel delivers greater durability

3/8"

Saw Size

50–100 cc

Bar Lengths

16–36" (40–90 cm)

Semi-Chisel

Kickback Safety

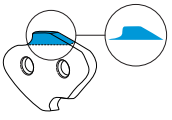

No.	Gauge	Standard Sequence
M72DPX	.050"	
M73DPX	.058"	
M75DPX	.063"	

Saw Chain – High-Performance Saws

DuraCut™

M20, 21, 22 LPX

Cut effectively in dirty and abrasive conditions with this more durable version of our high-performing .325" pitch LPX chain; cuts up to 3 times longer. (Formerly named MultiCut™.) Maintain with standard maintenance tools.

Features and Benefits

- Extra heavy-duty chrome and an advanced plating process enables exceptional durability and stay-sharp
- LubriTec™ keeps your saw chain and guide bar oiled, for less friction and longer life
- Blued Cutters deliver high-quality protection against corrosion
- Top-Plate Filing Indicators makes accurate sharpening easier
- Our exclusive OCS-01 Steel delivers greater durability

.325"

Saw Size

38–62 cc

Bar Lengths

13–20" (32–50 cm)

Chisel

7

Kickback Safety

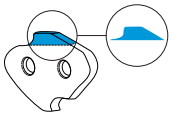

No.	Gauge	Standard Sequence
M20LPX	.050"	
M21LPX	.058"	
M22LPX	.063"	

M72, 73, 75 LPX

Cut more between sharpenings in the toughest, dirtiest, or most abrasive conditions with this more durable version of our high-performing 3/8" pitch LPX chain; cuts up to 3 times longer. (Formerly named MultiCut™.) Maintain with standard maintenance tools.

Features and Benefits

- Extra heavy-duty chrome and an advanced plating process enables exceptional durability and stay-sharp
- LubriTec™ keeps your saw chain and guide bar oiled, for less friction and longer life
- Blued Cutters deliver high-quality protection against corrosion
- Top-Plate Filing Indicators makes accurate sharpening easier
- Our exclusive OCS-01 Steel delivers greater durability

3/8"

Saw Size

50–100 cc

Bar Lengths

16–36" (40–90 cm)

Chisel

7

Kickback Safety

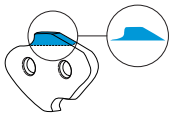

No.	Gauge	Standard Sequence
M72LPX	.050"	
M73LPX	.058"	
M75LPX	.063"	

Chain part numbers printed in *red italics* have been obsoleted. Contact your authorized Oregon distributor for availability.

RipCut™

Any saw mill worker will tell you that ripping chain is different from all other saw chains. You need a special kind of chain for ripping cuts, the kind that transforms raw timber into the boards and planks used in homes and businesses. Oregon's RipCut is designed specifically for chain-type sawmills, producing smooth cuts with supreme efficiency.

RipCut's precise ripping cuts give you a smooth surface every time you cut parallel to the wood grain. RipCut isn't recommended for hand-held use, but that suits experienced millwrights just fine.

• Ripping • Smooth

RipCut™

72, 73, 75 RD

Specially made for ripping — making cuts parallel to the wood grain. 72, 73, 75 RD has a special ripping application grind for making dimensional boards and planks from larger timbers. For use on chain-type sawmills. Not recommended for hand-held use.

Features and Benefits

- LubriTec™ keeps your saw chain and guide bar oiled, for less friction and longer life
- Our exclusive OCS-01 Steel delivers greater durability

No.	Gauge	Standard Sequence
72RD	.050"	
73RD	.058"	
75RD	.063"	

3/8"

Saw Size

For ripping cuts only. Do not use these chains for any type of cutting other than ripping

Micro Chisel **Kickback Safety**

RipCut™

27 R
27 RX

Specially made for ripping — making cuts parallel to the wood grain. 27R, RX has a special ripping application grind for making dimensional boards and planks from larger timbers. The 27RX is a super-skip sequence to allow greater chip clearance when making extra wide cuts. For use on chain-type sawmills. Not recommended for hand-held use.

Features and Benefits

- LubriTec keeps your saw chain and guide bar oiled, for less friction and longer life
- Our exclusive OCS-01 Steel delivers greater durability

No.	Gauge	Standard Sequence
27R	.063"	
		Super-Skip Sequence
27RX	.063"	

.404"

Saw Size

For ripping cuts only. Do not use these chains for any type of cutting other than ripping

Micro Chisel

Kickback Safety

Sculptor™

Carvers require precision cutting tools to transform wood of different shapes and sizes into works of art. Sculptor was designed with carvers and precise detail work in mind. Sculptor's Micro Chisel cutters give you the freedom to create fine detail and finishing work.

Sculptor is also easy to maintain and light-weight for optimum maneuverability. It is the perfect tool for carvers, pruners, and any other user who values extra-fine cutting.

25 A

25 F

25A – For users with bars with a nose radius of 12 mm or less designed for carving. Micro Chisel® cutters have small-radius working corners to give you excellent performance with easy maintenance. Small size and light weight make 25A easy to use and maneuver.

25F – For users with bars with a nose radius of 12 mm or less designed for carving. The "full-house" sequencing makes 25F the preferred chain of some carvers cutting fine detail and finishing work. Micro Chisel cutters have small-radius working corners to give you excellent performance with easy maintenance. Small size and light weight make the 25F easy to use and maneuver.

No.	Gauge	Standard Sequence
25A	.050"	

No.	Gauge	Full House Sequence
25F	.050"	

1/4"

Saw Size

Up to 38 cc

Bar Lengths

Sculptor Bar Only
See Guide Bar section pg. FOR 166

Micro Chisel

Warning: Failure to use this chain on bars with nose radii of 12 mm or smaller can result in severe kickback

Chain part numbers printed in *red italics* have been obsoleted. Contact your authorized Oregon distributor for availability.

AdvanceCut™

Homeowners need a chainsaw within arm's reach for occasional yardwork and even storm-damaged trees. You also need a saw chain advanced enough to tackle tough jobs, but user-friendly enough and forgiving for occasional use.

Oregon's AdvanceCut was created for "DIY" homeowners because of its solid performance and reliable durability.

Low kickback design makes AdvanceCut an ideal – and dependable – choice for maintaining your property's trees. AdvanceCut is an essential tool for the discerning homeowner.

• Dependable • Advanced

AdvanceCut™

90 PX

Maintain your trees with ease. 90PX offers higher chain efficiency, ideal for small, low-powered saws great for homeowners and landscapers (replaces 90SG). Our narrow kerf cutting systems increase efficiency. They need less power from the saw than standard cutting systems. The narrow .043" gauge reduces the weight of the bar and chain by roughly 15%. Low-vibration, low kickback Chamfer Chisel™ cutters' twin cutting corners offer outstanding performance. They are durable, easy to maintain and forgiving, comparable to round-cornered chains. Bumper drive link paired with depth gauge design, offers reduced kickback with strong performance. Always use with guide bars designed for narrow kerf saw chain.

Features and Benefits

- LubriTec™ keeps your saw chain and guide bar oiled, for less friction and longer life
- Top-Plate Filing Indicators makes accurate sharpening easier

No.	Gauge	Standard Sequence
90PX	.043"	

3/8" Low Profile™

Saw Size

Up to 42 cc

Bar Lengths

Up to 16" (40 cm)

Chamfer Chisel

Kickback Safety

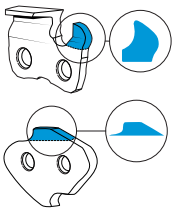

AdvanceCut™

91 PX

91PX is for homeowners and occasional users who want a low-vibration and low kickback saw chain. The Chamfer Chisel cutters' twin cutting corners offer outstanding performance. They are durable, easy to maintain and forgiving, comparable to round-cornered chains. Bumper drive link paired with depth gauge design, offers reduced kickback with strong performance.

Features and Benefits

- LubriTec™ keeps your saw chain and guide bar oiled, for less friction and longer life

No.	Gauge	Standard Sequence
91PX	.050"	

3/8" Low Profile™

Saw Size
Up to 42 cc

Bar Lengths
Up to 18" (45 cm)

Chamfer Chisel

Kickback Safety

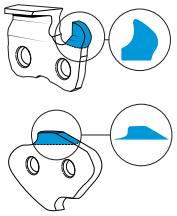

72, 73, 75 V

Choose 72, 73 or 75V for added safety. An ideal, low kickback chain for homeowners and occasional users. The low-vibration, full chisel cutters offer reliable performance. Smooth cutting and low kickback performance via our unique, patented, bent-over depth gauges.

Features and Benefits

- LubriTec™ keeps your saw chain and guide bar oiled, for less friction and longer life
- Top-Plate Filing Indicators makes accurate sharpening easier
- Our exclusive OCS-01 Steel delivers greater durability

No.	Gauge	Standard Sequence
72V	.050"	
73V	.058"	
75V	.063"	

3/8"

Saw Size
50–100 cc

Bar Lengths
16–32" (40–80 cm)

Chisel

Kickback Safety

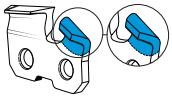

PowerSharp®

Occasional saw chain users sometimes spend too much time using hand files to sharpen dull chain, or they lose an afternoon taking it to a dealer for professional sharpening. Fumbling an inexact sharpening is a thing of the past with PowerSharp. PowerSharp takes saw chain from dull to sharp in as little as three seconds.

PowerSharp is also ideal for professional users who want greater productivity on the job. Professionals get precise and knife-sharp edges quickly and easily – every time.

• Fast • Easy • Precise

Sharpens On the Saw, On the Job, In Seconds™

PowerSharp® is an easy-to-use, precision sharpening system that gives chainsaw users the power to sharpen their chain in a matter of seconds with a simple attachment. Patent-pending features make PowerSharp a major advance over other sharpening methods.

Easy to Use

PowerSharp is a system that includes the PowerSharp chain, the PowerSharp guide bar, and the PowerSharp bar-mount sharpener. Together, they work to make sharpening simple and easy.

Attach

When the chain dulls, simply attach the bar-mount sharpener to the PowerSharp guide bar. Twin guide holes in the tip of the bar make perfect alignment fool proof.

Sharpen

Press the tip of the sharpener to a solid surface for 3 – 5 seconds.

Cut

And it's back to the job, working faster with less effort.

PowerSharp®

91 PS

Now you can sharpen fast, easy, and on the saw with the PowerSharp system. Includes the 91PS PowerSharp saw chain; a guide bar designed for PowerSharp; and the PowerSharp bar-mount sharpener. Sharpen the 91PS chain in a flash. Go from dull to sharp in just three seconds with this easy-to-use, precision sharpening system. Stays sharp three times longer than 91PX saw chain.

Features and Benefits

- LubriTec™ keeps your saw chain and guide bar oiled, for less friction and longer life

No.	Gauge	Standard Sequence
91PS	.050"	

3/8" Low Profile™

Saw Size

Up to 42 cc

Bar Lengths

Up to 18" (45 cm)

PowerSharp

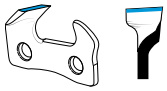

Kickback Safety

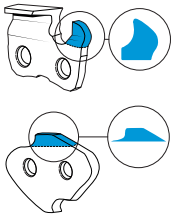

On pages FOR 20–97, the PowerSharp diamond identifies the chainsaw models capable of running the PowerSharp sharpening system.

Fits Most Popular Chainsaw Brands

Tail Mount *	Bar Length	Starter Kit A	Chain & Sharpening Stone B	Sharpener Housing
A041	12"	551664	PS45	
	14"	541652	PS52	
	16"	541656	PS56	
	18"	541662	PS62	
A074	12"	553819	PS44	
	14"	541650	PS50	
	16"	541655	PS55	
A095	14"	544852	PS52	
	16"	544856	PS56	

555745

Find out more at PowerSharp.com

Oregon®, Carlton®, Stihl®, Husqvarna®, & Windsor® Chain Cross-Reference Chart

					OREGON	Stihl		Husqvarna	Carlton		Windsor
Pitch	Gauge	Grind	Cutter Type	Sequence	P/N	P/N	Alt P/N	P/N	P/N	Alt P/N	P/N
1/4"	.050"	Round	Micro Chisel®	Standard	**25AP**	13RM			E1MC-BL	E1MC	50K
3/8 Low Profile™	.043"	Round	Chamfer	Standard	***90SG***	61PMN	61PMM3		N4C-BL	N4C	43RG
		Round	Chamfer	Standard	**90PX**	61PMN	61PMM3	H38	N4C-BL	N4C	43RG
	.050"	Round	Chamfer	Standard	**91PX**	63PM1	63PM3	H37	N1C-BL		50RG
		Round	PowerSharp®	Standard	**91PS**						
		Round	Semi-Chisel	Standard	**91PXL**	63PM1	63PM3		N1C-BL		50RG
		Round	Semi-Chisel	Standard	**91VXL**	63PM		H35	N1C		50R
		Round	Semi-Chisel	Standard	**M91VXL**						
.325"	.050"	Round	Micro Chisel	Standard	***95VPX***			H30	K1NK-BL	K1NK	50JSG
		Round	Micro Chisel	Standard	**95TXL**			H30, SP33G	K1NK-BL	K1NK	50JSG
		Round	Micro Chisel	Standard	**20BPX**	23RM		H22	K1C-BL	K1C	50J
		Round	Chisel	Standard	**20LPX**	23RS		H23	K1L-BL	K1L	50JL
		Round	Micro Chisel	Standard	**M20BPX**						
		Round	Chisel	Standard	***M20LPX***						
	.058"	Round	Micro Chisel	Standard	**21BPX**	25RM		H25	K2C-BL	K2C	58J
		Round	Chisel	Standard	**21LPX**	25RS		H21	K2L-BL	K2L	58JL
		Round	Micro Chisel	Standard	**M21BPX**						
		Round	Chisel	Standard	***M21LPX***						
	.063"	Round	Micro Chisel	Standard	**22BPX**	26RM		H28	K3C-BL	K3C	63J
		Round	Chisel	Standard	**22LPX**	26RS		H26	K3L-BL	K3L	63JL
		Round	Micro Chisel	Standard	**M22BPX**						
		Round	Chisel	Standard	***M22LPX***						
3/8"	.050"	Round	Chisel	Standard	**72V**	33RSS	33RM2	H80	A1LM-GL	A1EP-GL	
		Round	Chisel	Standard	**72EXL, *LGX***	33RS	33RS	H47	A1LM		50APL
		Round	Chisel	Standard	**72LPX**			H46	A1LM-BL		50APLG
		Round	Semi-Chisel	Standard	**M72DPX**						
		Round	Chisel	Standard	***M72LPX***						
		Round	Chisel	Skip	**72EXJ, *JGX***	33RSF		H47S	A1LM-SK		50APLX
		Round	Chisel	Skip	**72JPX**	33RSF		H46S	A1LM-BLSK		
		Round	Semi-Chisel	Standard	**72DPX**	33RM1	33RM	H51	A1EP	A1EP-BL	50AG
		Round	Semi-Chisel	Standard	**72RD**				A1EP-RP		
		Round	Semi-Chisel	Skip	**72APX**	33RMF			A1EP-SK		
	.050"	Square	Chisel	Standard	**72CL**	33RSL					
		Square	Chisel	Semi-Skip	**72CK**	33RSLHK					
		Square	Chisel	Skip	**72CJ**	33RSLF		H82	A1LM-SK-SG		
	.058"	Round	Chisel	Standard	**73V**			H81	A2LM-GL	A2EP-GL	
		Round	Chisel	Standard	**73EXL, *LGX***	35RS		H48	A2LM		58APL
		Round	Chisel	Standard	**73LPX**	35RS1		H42	A2LM-BL		58APLG
		Round	Semi-Chisel	Standard	**M73DPX**						
		Round	Chisel	Standard	***M73LPX***						
		Round	Chisel	Skip	**73EXJ, *JGX***			H48S	A2LM-SK		58APLX
		Round	Semi-Chisel	Standard	**73DPX**	35RM1		H54	A2EP	A2EP-BL	58AG
		Round	Semi-Chisel	Standard	**73RD**				A2EP-RP		

Saw chain complies with low kickback performance requirements (FOR 2–3)
Saw chain does not comply with low kickback performance requirements (FOR 2–3)

Oregon®, Carlton®, Stihl®, Husqvarna®, & Windsor® Chain Cross-Reference Chart

					OREGON	Stihl		Husqvarna	Carlton		Windsor
Pitch	Gauge	Grind	Cutter Type	Sequence	P/N	P/N	Alt P/N	P/N	P/N	Alt P/N	P/N
3/8"	.063"	Round	Chisel	Standard	**75V**	36RS3			A3LM-GL	A3EP-GL	
		Round	Chisel	Standard	**75EXL, *LGX***	36RS	36RS	H50	A3LM		63APL
		Round	Chisel	Standard	**75LPX**	36RS1		H45	A3LM-BL		63APLG
		Round	Semi-Chisel	Standard	**M75DPX**						
		Round	Chisel	Standard	***M75LPX***						
		Round	Chisel	Skip	**75EXJ, *JGX***			H50S	A3LM-SK		63APLX
		Round	Semi-Chisel	Standard	**75DPX**	36RM1	36RM	H58	A3EP	A3EP-BL	63AG
		Round	Semi-Chisel	Standard	**75RD**				A3EP-RP		
		Square	Chisel	Standard	**75CL**	36RSL					
		Square	Chisel	Standard	**75CLX**						
		Square	Chisel	Semi Skip	**75CK**	36RSLHK					
		Square	Chisel	Semi Skip	**75CKX**						
		Square	Chisel	Skip	**75CJ**	36RSLF		H83	A3LM-SK-SG		
		Square	Chisel	Skip	**75CJX**						
.404"	.058"	Round	Chisel	Standard	**58L**				B2LM		
		Round	Chisel	Skip	**58J**				B2LM-SK		
		Square	Chisel	Skip	**58CJ**						
		Square	Chisel	Skip	**58CL**						
	.063"	Round	Chisel	Standard	**59L**	46RS		H57	B3LM		63BL
		Round	Chisel	Skip	**59J**			H57S	B3LM-SK		
		Round	Chisel	Standard	**68LX**	46RSK			B3LM		
		Round	Chisel	Skip	**68JX**	46RSFK					
		Square	Chisel	Standard	**59CL**	46RSL					
		Square	Chisel	Semi Skip	**59CK**						
		Square	Chisel	Skip	**59CJ**	46RSLF					
		Square	Chisel	Standard	**68CL**	46RSLK					
		Square	Chisel	Skip	**68CJ**	46RSLF					
		Round	Micro Chisel®	Standard	**27X**	46RM			B3S	B3EP, B3RM35	63B
		Round	Micro Chisel	Skip	**27AX**	46RMF					
		Round	Micro Chisel	Standard	**27R**				B3H-RP	B3RM10	63BR
		Round	Micro Chisel	Skip	**27RA**				B3HR		

*Please note. On matters of safety or suitability for saw chain NOT manufactured by Oregon, this chart offers no information or comment. Please read and follow all the notes below to use this chart properly.

Notes:

- This chart is meant to help those who want to replace other brands of saw chain with a comparable Oregon chain.
- Many saw chains are interchangeable in terms of their fit-up. But interchanging certain types of chains might not be right for some users. Stay safe. Be certain that the chain you choose is right for both the use, and for your level of experience.
- You can learn more about compliance. Find out about the low kickback performance requirements of ANSI B175.1-2012, or about other safety issues as they pertain to any Carlton, Stihl, or Windsor chain. See the documents on saw chain safety provided by those companies.
- This chart should not be used to replace Oregon saw chain with any other brand of chain. Doing so is a misuse of this chart and those who do so assume any and all risks associated with such misuse.
- Chain part numbers printed in *red italics* are now obsolete. Contact your authorized Oregon distributor for availability.

Saw Chain

Sharpening Geometry

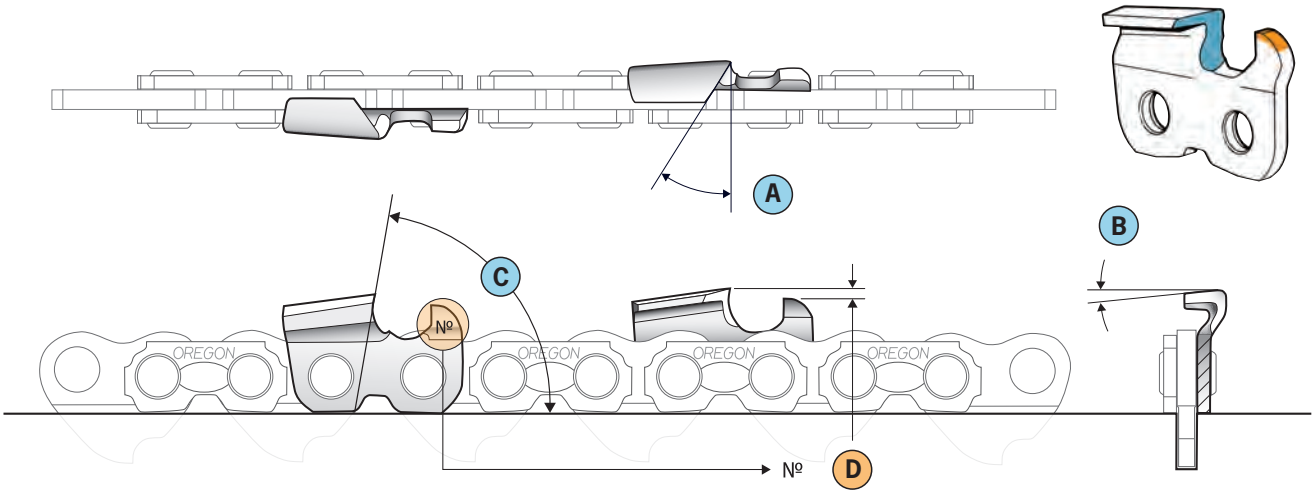

Sharpening geometry is universal for all chain types.
See "Filing Angles" or "Grinding Angles" chart on the following pages for recommended A, B, C, or D sharpening or grinding angles by chain type.

Universal Grinding Wheel Dressing

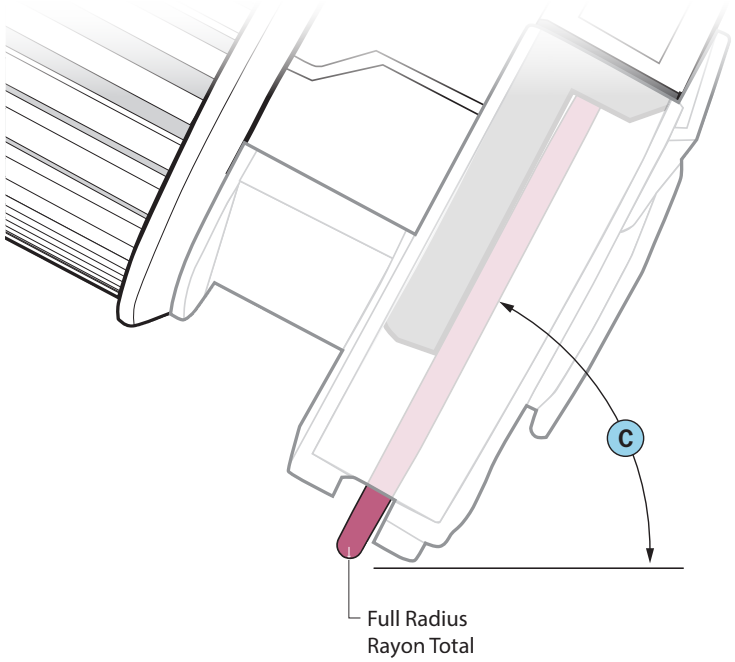

Saw chain complies with low kickback performance requirements (FOR 2–3)
Saw chain does not comply with low kickback performance requirements (FOR 2–3)
Chain part numbers printed in *red italics* have been obsoleted. Contact your authorized Oregon distributor for availability.

Filing Angles

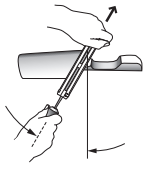
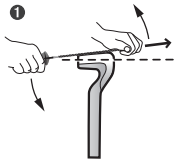
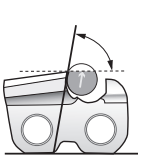
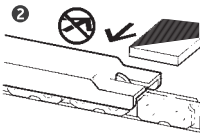

			A	B	C	D
1/4"	25AP	5/32"	30°	10°	85°	.025"
3/8" Low Profile™	90PX, *90SG*	4.5 mm	30°	0°	75°	.025"
	91P, 91PX, 91PXL	5/32"	30°	0°	80°	.025"
	91VXL, M91VXL	5/32"	30°	0°	80°	.025"
.325" Low Profile™	80TXL					
.325"	*95VPX*	3/16"	30°	10°	70°	.025"
	20, 21, 22BPX, M20, M21, M22BPX	3/16"	30°	10°	70°	.025"
	95TXL	3/16"	30°	10°	70°	.025"
	20, 21, 22LPX, *M20*, *M21*, *M22LPX*	3/16"	25°	10°	60°	.025"
3/8"	72, 73, 75V	7/32"	25°	10°	60°	.025"
	72, 75CJ, CK, CL	❸	45°	45°	90°	.025"
	72APX, 72, 73, 75DPX, M72, M73, M75DPX	7/32"	30°	10°	80°	.025"
	72, 73, 75EXL, EXJ, *LGX*, *JGX*, LPX, JPX	7/32"	25°	10°	60°	.025"
	M72, *M73*, *M75LPX*	7/32"	25°	10°	60°	.025"
	72, 73, 75RD	7/32"	10°	10°	75°	.025"
.404"	27X, 27AX	7/32"	30°	10°	65°	.030"
	27R, RX, *RA*	7/32"	10°	10°	75°	.030"
	58CJ, CL, 59CJ, CK, CL	❸	45°	45°	85°	.025"
	58, 59J, L	7/32"	25°	10°	60°	.025"
	68LX, JX	7/32"	25°	10°	60°	.030"
	68CJ, CL	❸	45°	45°	—	.030"

Grinding Angles

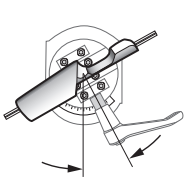
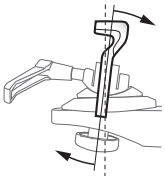
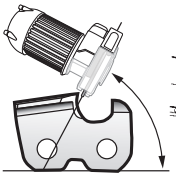
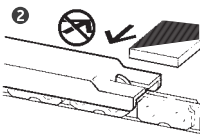

			A	B	C	D
1/4"	25AP	1/8"	30°	10°	55°	.025"
3/8" Low Profile	90PX, *90SG*	1/8"	30°	0°	55°	.025"
	91P, 91PX, 91PXL	1/8"	30°	0°	55°	.025"
	91VXL, M91VXL	1/8"	30°	0°	55°	.025"
.325" Low Profile™	80TXL					
.325"	*95VPX*	3/16"	30°	10°	55°	.025"
	20, 21, 22BPX, M20, M21, M22BPX	3/16"	30°	10°	55°	.025"
	95TXL	3/16"	30°	10°	55°	.025"
	20, 21, 22LPX, *M20*, *M21*, *M22LPX*	3/16"	25°	10°	55°	.025"
3/8"	72, 73, 75V	3/16"	25°	10°	55°	.025"
	72, 75CJ, CK, CL	–	15°	45°	–	.025"
	72APX, 72, 73, 75DPX, M72, M73, M75DPX	3/16"	30°	10°	55°	.025"
	72, 73, 75EXL, EXJ, *LGX*, *JGX*, LPX, JPX	3/16"	25°	10°	55°	.025"
	M72, *M73*, *M75LPX*	3/16"	25°	10°	55°	.025"
	72, 73, 75RD	3/16"	10°	10°	50°	.025"
.404"	27X, 27AX	3/16"	30°	10°	55°	.030"
	27R, RX, *RA*	3/16"	10°	10°	50°	.030"
	58CJ, CL, 59CJ, CK, CL	–	15°	45°	–	.025"
	58, 59J, L	3/16"	25°	10°	55°	.025"
	68LX, JX	3/16"	25°	10°	55°	.030"
	68CJ, CL	–	15°	45°	–	.030"

❶ When using an Oregon® file guide, ALWAYS hold it level, 0-degrees flat on the Top Plate.
❷ Oregon Depth Gauge File (flat file) P/N 12211 must be purchased separately for use with Oregon Depth Gauge Tools.
❸ Square Ground Filing: A 15° cutting edge is the result when the file is held at 45° top-plate angle and 45° down angle.

Saw Chain

Sharpening Tools

Pitch	OREGON		(2)	(12)	(12)	(10)	5-3/4" (5)	4-1/2" (5)
1/4"	25AP	37534	40459	70504 ●	12211	22290	OR 534-18	OR 4125-18
3/8" Low Profile™	90PX, *90SG*	31692	40461	70511 ●	12211	31941	OR 534-18	OR 4125-18
	91P	37534	40459	70504 ●	12211	22290	OR 534-18	OR 4125-18
	91PX, 91PX, 91PXL	37534	40459	70504 ●	12211	31941	OR 534-18	OR 4125-18
	91VXL, M91VXL	37534	40459	70504 ●	12211	31941	OR 534-18	OR 4125-18
.325"	*95VPX*	31690	40460	70503 ●	12211	31941	OR 534-316	OR 4125-316
	20, 21, 22BPX, M20, M21, M22BPX	31690	40460	70503 ●	12211	31941	OR 534-316	OR 4125-316
	95TXL	31690	40460	70503 ●	12211	31941	OR 534-316	OR 4125-316
	20, 21, 22LPX	31690	40460	70503 ●	12211	31941	OR 534-316	OR 4125-316
	M20, M21, M22LPX	31690	40460	70503 ●	12211	31941	OR 534-316	OR 4125-316
3/8"	72, 73, 75V	31686	40458	70502 ●	12211	31941	OR 534-316	OR 4125-316
	72, 75CJ, CK, CL	–	–	–	12211	22290	–	–
	72APX, 72, 73, 75DPX, M72, M73, M75DPX	31686	40458	70502 ●	12211	31941	OR 534-316	OR 4125-316
	72, 73, 75 EXL, EXJ, *LGX*, *JGX*	31686	40458	70502 ●	12211	31941	OR 534-316	OR 4125-316
	72, 73, 75 LPX, JPX	31686	40458	70502 ●	12211	31941	OR 534-316	OR 4125-316
	M72, M73, M75LPX	31686	40458	70502 ●	12211	31941	OR 534-316	OR 4125-316
	72, 73, 75RD	31686	40458	70502 ●	12211	31941	OR 534-316	OR 4125-316
.404"	27X, 27AX	31686	40458	70502 ●	12211	22291	OR 534-316	OR 4125-316
	27R, RX, *RA*	31686	40458	70502 ●	12211	22291	OR 534-316	OR 4125-316
	58CJ, CL	–	–	–	12211	22290	–	–
	59CJ, CK, CL	–	–	–	12211	22290	–	–
	58, 59J, L	31686	40458	70502 ●	12211	31941	OR 534-316	OR 4125-316
	68LX, JX	31686	40458	70502 ●	12211	22291	OR 534-316	OR 4125-316
	68CJ, CL	–	–	–	12211	22291	–	–

For display packaged grinding wheels, add an "A" suffix to the part number.

Saw chain complies with low kickback performance requirements (FOR 2–3)
Saw chain does not comply with low kickback performance requirements (FOR 2–3)
Chain part numbers printed in *red italics* have been obsoleted. Contact your authorized Oregon distributor for availability.

Loop Construction Kits & Saw Chain 25-Pack Replacement Parts

Pitch	OREGON	Loop Kits: Loop Kits (25 ft.)	Saw Chain 25-Pack Replacement Parts: Left-Hand Cutter	Right-Hand Cutter	Tie Strap	Preset Tie Strap	Drive Link	Bumper Drive Link	Bumper Tie Strap
1/4"	25AP	39934	P23848	P23849	P23850	P23956	P18960	P21893	
3/8" Low Profile™	*90SG*	104713	P104709	P104710	P104711	P108045	P108043		P104708
	90PX	559788	P104709	P104710	P104711	P108045	P108043	P570777	
	91PX	22140	P21693	P21694	P24295	P25068	P21721	P111822	
	91PXL	22140	537492	537493	P24295	P25068	P21721	575285	
	91VG	27300	537492	537493	P24295	P25068	P21721		P26205
	91VX	22140	P21693	P21694	P24295	P25068	P21721		
	M91VXL	22140			P24295	P25068	P21721		
	91VXL	22140	537492	537493	P24295	P25068	P21721		
.325"	*95VPX*	101124	P101923	P101924	P100956	P101125	P101024	*P111509*	
	20BPX	34914	P22574	P22575	P23843	P31939	P31938	*P111509*	
	21BPX	34914	P22574	P22575	P23843	P31939	P34177	P34178	
	22BPX	39649	P22574	P22575	P23843	P34185	P35711	P37530	
	95TXL	576688	P584531	P584532	P571847	P576686	P576808	P571846	
	20LPX	34914	P35745	P35746	P23843	P31939	P31938	*P111509*	
	21LPX	34914	P35745	P35746	P23843	P31939	P34177	P34178	
	22LPX	39649	P35745	P35746	P23843	P34185	P35711	P37530	
	M20LPX	34914	*P106740*	*P106741*	P23843	P31939	P31938	*P111509*	
	M21LPX	34914	*P106740*	*P106741*	P23843	P31939	P34177	P34178	
	M22LPX	39649	*P106740*	*P106741*	P23843	P34185	P35711	P37530	
	95R	101124	*P103125*	*P103126*	P100956	P101125	P101024	P111509	
3/8"	72V	30118	P107795	P107796	P23837	P23910	P65715		
	73V	30118	P107795	P107796	P23837	P23910	P68183		
	75V	39376	P107795	P107796	P23837	P23921	P30927		
	72CJ, CK, CL	30118	P28512	P28513	P23837	P23910	P65715		
	75CJ, CK, CL	39376	P28512	P28513	P23837	P23921	P30927		
	72APX, DPX	30118	555914	555915	P23837	P23910	P65715	P20857	
	73DP(X)	30118	555914	555915	P23837	P23910	P68183	P20856	
	75DP(X)	39376	555914	555915	P23837	P23921	P30927	P20858	
	72EXL, EXJ	596324	P582369	P582370	P581897	P596323	P582349		
	73EXL, EXJ	596324	P582369	P582370	P581897	P596323	P582353		
	75EXL, EXJ	600146	P582369	P582370	P581897	P596362	P582350		
	72JGX, LGX	30118	P26197	P26198	P23837	P23910	P65715		
	73JGX, LGX	30118	P26197	P26198	P23837	P23910	P68183		
	75JGX, LGX	39376	P26197	P26198	P23837	P23921	P30927		
	72JPX, LPX	30118	P101925	P101926	P23837	P23910	P65715	P20857	
	73JPX, LPX	30118	P101925	P101926	P23837	P23910	P68183	P20856	
	75JPX, LPX	39376	P101925	P101926	P23837	P23921	P30927	P20858	
	72RD	30118	P38951	P38952	P23837	P23910	P65715		
	73RD	30118	P38951	P38952	P23837	P23910	P68183		
	75RD	39376	P38951	P38952	P23837	P23921	P30927		
	M72LPX	30118	*P108125*	*P108126*	P23837	P23910	P65715	P20857	
	M73LPX	30118	*P108125*	*P108126*	P23837	P23910	P68183	P20856	
	M75LPX	39376	*P108125*	*P108126*	P23837	P23921	P30927	P20858	
.404"	27X, AX	30147	P18998	P18999	P23825	P23868	P17464		
	27R, RX, *RA*	30147	P35145	P35146	P23825	P23868	P17464		
	58J, L	30147	P108795	P108796	P23825	P23868	P65514		
	59J, L	30147	P108795	P108796	P23825	P23868	P65513		
	68LX, JX	521078	521090	521091	521092	521093	521095		
	68CL, CJ	521078	533513	533514	521092	521093	521095		

Saw Chain

Properly Sharpened Cutter

Cutter features

1. Top Plate
2. Square or Round Working Corner
3. Side Plate
4. Heel
5. Rivet Hole
6. Chassis
7. Gullet
8. Toe
9. Depth Gauge

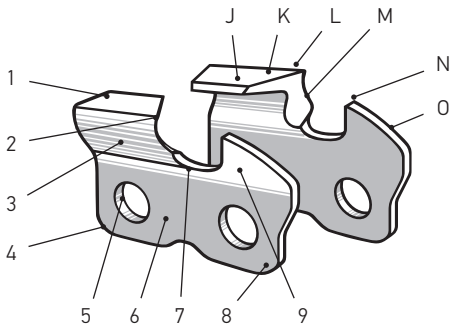

Sharpened Cutters have:

J. Correct angle on top plate (degree of angle depends on chain type)
K. Razor-edge on top plate (no light should reflect from this edge)
L. Slightly protruding "hook" or point (curve on non-chisel chain)
M. Razor-edge (with no nicks) on side plate
N. Top of depth gauge at correct height below top plate
O. Front of depth gauge rounded off

Filing Errors

Backslope on side plate cutting edge – cutter won't feed into wood

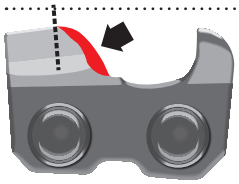

Cause
File held too high

Solution
Refile cutters to recommended angle

Too-thin top plate causes rapid dulling

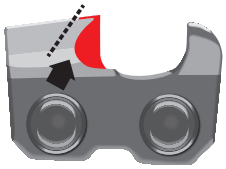

Cause
File handle held too low

Solution
Refile properly, at recommended angle

To much hook in side plate cutting edge – cutters grab, cut rough

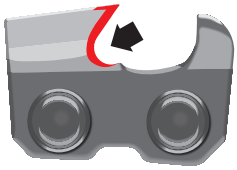

Cause
File held too low or file is too small

Solution
Refile to recommended angle with right size file

Top plate angle less than recommended – slow cutting, excess wear on chain and bar

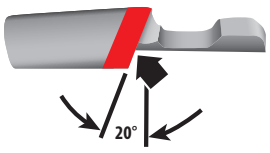

Cause
File held at less than recommended angle

Solution
Refile at correct angle

Flat top plate cutting angle – chain won't feed into wood, won't cut

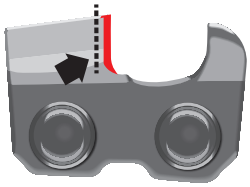

Cause
File handle held too high

Solution
Refile properly at recommended angle

Top plate angle more than recommended – side plate cutting edge is thin and dulls rapidly

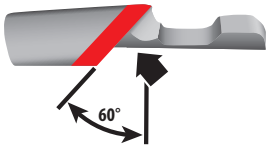

Cause
File held at more than recommended angle

Solution
Refile at correct angle

Drive Link Wear

Rounded concave bottom

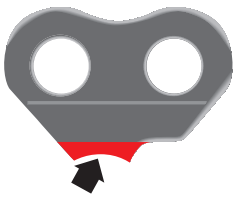

Cause
Shallow grove on bar tip

Solution
Regroove bar tip. Bar may need replacing

Note
Applies to DuraCut™ bars only

Scars on sides

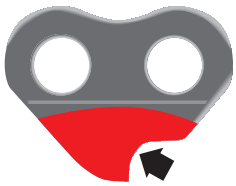

Cause
Loose chain jumping off bar

Solution
Adjust chain tension. Replace bent drive links or replace chain. Refile at correct angle

Drive Link Wear

Nicked bottom or back

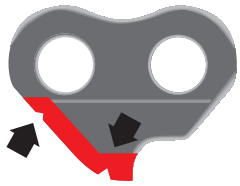

Cause
Cutting with loose chain, or wrong pitch sprocket

Solution
Adjust chain tension. Install correct sprocket. File off burrs. Replace damaged drive links or replace chain

Front point turned up

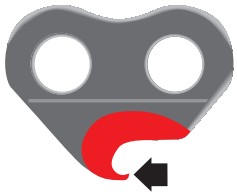

Cause
Drive links bottoming in sprocket. Sprocket worn

Solution
Replace sprocket. Sharpen tangs. Check for burrs

Battered and broken bottom

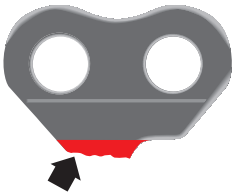

Cause
Chain jumped bar. Spur sprocket hit drive links

Solution
Replace damaged drive links, sharpen tangs with round file or replace chain. Remove burrs

Front or back peened

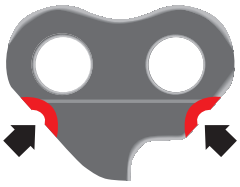

Cause
Wrong pitch sprocket or pro-longed chain chatter

Solution
Replace sprocket. Adjust chain tension. Chain may be damaged beyond repair

Sides worn round at bottom

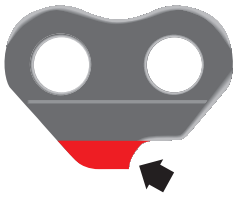

Cause
Chain wobbled in bar groove. Uneven cutters or worn bar rails

Solution
Rework bar rails and groove. Correct chain filing

Excess wear on bottom of all chain parts

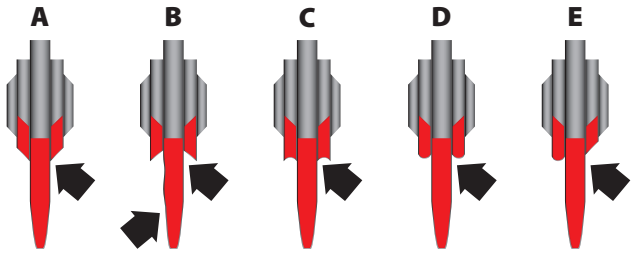

A. Open bar groove B. Severe abrasion and wobbly chain on thin bar rails
C. Rails not flat D. Wobbly chain – rails too thick E. One rail too thin or soft

Cause
Uneven filing, worn bar rails cause chain to wobble

Solution
File chain properly. Recondition bar rails or replace bar. Replace chain if necessary

Cutter and Tie Strap Wear

Excessive heel wear on cutters and tie straps

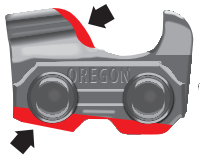

Causes
1. Blunt top plate filing
2. Forcing dull chain to cut
3. Lack of lubrication
4. Low depth gauge settings
5. Forcing chain to cut frozen wood

Solution
File cutters properly. Don't force dull chain to cut. Use oil freely

Light damage on cutting edges of top and/or side plates

Cause
Excessive pressure on dull or misfiled cutters. Common during winter

Solution
File chain correctly. Use oil freely

Cutter and Tie Strap Wear

Edges burred and notch peened on tie straps

Cause
Chain chatter due to loose chain tension and improper filing

Solution
Correct chain tension. Refile chain properly. Replace sprocket if badly worn

Peened notch in tie strap causing tight joints and broken drive links

Cause
Chain run on badly worn spur sprocket or wrong pitch sprocket

Solution
Replace worn sprocket. Chain may need replacing

Peening on bottom of cutters and tie strap – causes tight joints

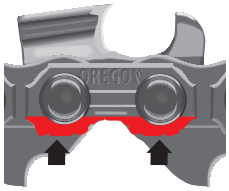

Cause
Loose chain tension. Result of dull cutters and forcing dull chain into wood

Solution
Keep proper tension. Keep cutters sharp. Chain may need replacing

Cracks under rear rivet holes on cutters and opposing tie straps

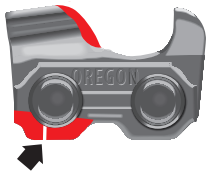

Cause
Excessive pressure on dull or misfiled cutters – common during winter

Solution
File chain correctly. Use oil freely

Blunt depth gauge causes rough cutting

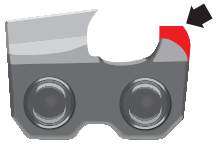

Cause
Uneven filing

Solution
Use correct depth gauge jointer to lower gauges evenly

Severe damage on either side of top and/or side plates

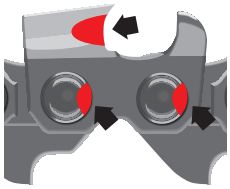

Cause
Cutters hit abrasive materials

Solution
File cutters to remove all damage

Peening on front corner of cutters and intermediate tie straps – causes tight joints

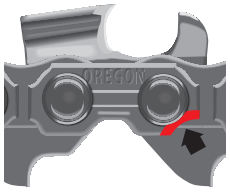

Cause
Chain striking bar entry. Sprocket too small or loose chain tension

Solution
Use proper bar and sprocket. Adjust chain tension correctly

Excessive wear on bottom of cutters and tie straps

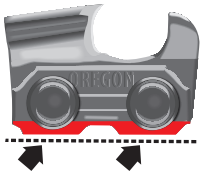

Cause
Depth gauges too high. Cutting edge cannot get into wood

Solution
Lower depth gauges to proper setting. Keep cutters filed correctly

Concave wear on bottom of cutters – connecting tie straps

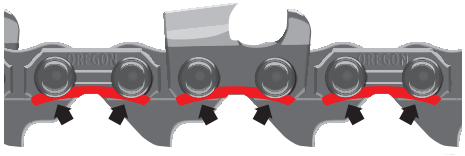

Causes
Chain tension too tight
Normal wear from undercutting (cutting with top of bar)

Solution
Adjust chain tension Reduce cutting with top of bar

Uneven depth gauge height. Chain won't cut straight.

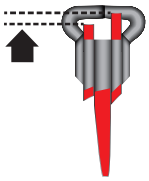

Cause
Improperly filed depth gauge

Solution
Round off front corner to maintain original shape

Saw Chain Drive Link Counts & Length in Feet

1/4"

Drive Link Count	Length in Feet
40	1.67
41	1.71
42	1.76
43	1.80
44	1.84
45	1.88
46	1.92
47	1.96
48	2.01
49	2.05
50	2.09
51	2.13
52	2.17
53	2.22
54	2.26
55	2.30
56	2.34
57	2.38
58	2.42
59	2.47
60	2.51
61	2.55
62	2.59
63	2.63
64	2.68
65	2.72
66	2.76
67	2.80
68	2.84
69	2.88
70	2.93
71	2.97
72	3.01
73	3.05
74	3.09
75	3.14
76	3.18
77	3.22
78	3.26
79	3.30
80	3.34
81	3.39
82	3.43
83	3.47
84	3.51

.325"

Drive Link Count	Length in Feet
40	2.16
41	2.21
42	2.27
43	2.32
44	2.38
45	2.43
46	2.48
47	2.54
48	2.59
49	2.65
50	2.70
51	2.75
52	2.81
53	2.86
54	2.92
55	2.97
56	3.02
57	3.08
58	3.13
59	3.19
60	3.24
61	3.29
62	3.35
63	3.40
64	3.46
65	3.51
66	3.56
67	3.62
68	3.67
69	3.73
70	3.78
71	3.83
72	3.90
73	3.94
74	4.00
75	4.05
76	4.10
77	4.16
78	4.21
79	4.27
80	4.32
81	4.37
82	4.43
83	4.48
84	4.54

3/8" & 3/8" Low Profile™

Drive Link Count	Length in Feet	Drive Link Count	Length in Feet
32	1.96	82	5.01
33	2.02	83	5.07
34	2.08	84	5.13
35	2.14	85	5.19
36	2.20	86	5.25
37	2.26	87	5.32
38	2.32	88	5.38
39	2.38	89	5.44
40	2.44	90	5.50
41	2.51	91	5.56
42	2.57	92	5.62
43	2.63	93	5.68
44	2.69	94	5.74
45	2.75	95	5.80
46	2.81	96	5.87
47	2.87	97	5.93
48	2.93	98	5.99
49	2.99	99	6.05
50	3.06	100	6.11
51	3.12	101	6.17
52	3.18	102	6.23
53	3.24	103	6.29
54	3.30	104	6.35
55	3.36	105	6.42
56	3.42	106	6.48
57	3.48	107	6.54
58	3.54	108	6.60
59	3.60	109	6.66
60	3.67	110	6.72
61	3.73	111	6.78
62	3.79	112	6.84
63	3.85	113	6.90
64	3.91	114	6.97
65	3.97	115	7.03
66	4.03	116	7.09
67	4.09	117	7.15
68	4.15	118	7.21
69	4.22	119	7.27
70	4.28	120	7.33
71	4.34	121	7.39
72	4.40	122	7.45
73	4.46	123	7.52
74	4.52	124	7.58
75	4.58	125	7.64
76	4.64	126	7.70
77	4.70	127	7.76
78	4.77	128	7.82
79	4.83	129	7.88
80	4.89	130	7.94
81	4.95		

.404"

Drive Link Count	Length in Feet	Drive Link Count	Length in Feet
62	4.19	95	6.42
63	4.26	96	6.49
64	4.33	97	6.56
65	4.39	98	6.62
66	4.46	99	6.69
67	4.53	100	6.76
68	4.60	101	6.83
69	4.66	102	6.90
70	4.73	103	6.96
71	4.80	104	7.03
72	4.87	105	7.10
73	4.93	106	7.17
74	5.00	107	7.23
75	5.07	108	7.30
76	5.14	109	7.37
77	5.21	110	7.44
78	5.27	111	7.50
79	5.34	112	7.56
80	5.41	113	7.63
81	5.48	114	7.70
82	5.54	115	7.76
83	5.61	116	7.83
84	5.68	117	7.90
85	5.75	118	7.97
86	5.81	119	8.03
87	5.88	120	8.10
88	5.95	121	8.17
89	6.02	122	8.24
90	6.08	123	8.30
91	6.15	124	8.37
92	6.22	125	8.44
93	6.29	126	8.51
94	6.35	127	8.57

Chain Pitch	Drive Link Count per Reel		
	Per 100' Reel	Per 25' Reel	Per 50' Reel
1/4"	2,392	600	N/A
.325"	1,848	464	N/A
3/8"	1,640	412	N/A
.404"	1,484	372	N/A
3/4"	N/A	N/A	384

GUIDE BARS

User Types . . . . . FOR 150–151
Choose the Right Guide Bar . . . . . FOR 152
Guide Bar Part Numbering System . . . FOR 153
SpeedCut™, VersaCut™, and
ControlCut™ Guide Bars . . . FOR 154–157
PowerCut™ Guide Bars . . . . . FOR 158–159
DuraCut™ Guide Bars . . . . . FOR 160–161
AdvanceCut™ Guide Bars . . . . . FOR 162–163
Single Rivet Guide Bars . . . . . FOR 164–165
Sculptor™ Guide Bars . . . . . .FOR 166
RSN Replacement Noses . . . . . .FOR 167
Pro-Lite® Guide Bars & Parts . . . . FOR 168–170
Guide Bar Tail Mounts . . . . . FOR 171–177
Guide Bar Troubleshooting . . . . . FOR 178–179

Professional

Loggers, arborists, orchardists, millwrights, forestry workers, and other highly skilled woodcutters require guide bars designed for the demands of their tough professions. Oregon® makes guide bars that are strong, durable, and reliable, and our state-of-the-art LubriTec oiling system promotes a long lifespan.

NEW
SpeedCut, VersaCut, & ControlCut

OLD
Pro-Lite®

SpeedCut™
For professionals who cut high volumes of wood. Narrow kerf. Durable and efficient. The lighter weight helps reduce operator fatigue.

VersaCut™
For professionals (like arborists) who cut with a variety of applications. Versatile and durable. The lighter weight helps reduce operator fatigue.

ControlCut™
for users who require smooth and controlled cuts. Smaller radius nose reduces kickback. The lighter weight helps reduce operator fatigue.

NEW
PowerCut

OLD
Power Match®

PowerCut™
For loggers and other users who require a tough, heavy-use tool. The chrome-moly body helps reduce wear and promotes a longer lifespan.

NEW
DuraCut

OLD
Armor Tip

DuraCut™
Made for challenging cutting environments. Stellite nose and chrome-moly body promotes ultra high-wear resistance.

Occasional User

Homeowners and other occasional users prize simplicity and reliability for yard work. You need a tool that can cut a stubborn tree or make that Saturday set aside for yardwork pleasant and satisfying. Oregon® guide bars like the Advance-Cut and Single Rivet were designed with occasional users in mind.

Oregon guide bars are safe, simple to use, light-weight, and provide added value by saving you money.

NEW
AdvanceCut

OLD
Pro-Am®

AdvanceCut™

For experienced homeowners, as well as farmers and firewood cutters. Multi-rivet nose, light-weight, and maneuverable.

NEW

OLD
Double Guard®

Single Rivet

For homeowners who only have an occasional need to use a chainsaw. The single-rivet, smaller-radius noses helps reduce kickback.

Guide Bars

Choose the Right Guide Bar for Your Saw

For safety and performance, it's essential that you choose the right guide bar. From electric and small gas to the largest professional powerheads, Oregon has the bar you need - beginning with 8" up to 42". Oregon offers you the broadest selection of guide bars in the industry. Use the chart below to help you choose the right guide bar for your saw.

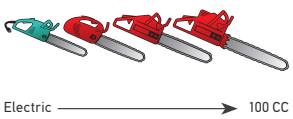

		4	0				8			3				
		.043"	.050"				.058"			.063"				
		3/8"	1/4"	3/8"	.325"	3/8"	.325"	3/8"	.404"	.325"	3/8"	.404"		
GOOD	Single Rivet	90	25	91										
BETTER	AdvanceCut™			91	95	20	72	21	73		22	75		
BEST	Light-Weight Professional Guide Bars													
	SpeedCut™ ControlCut™ VersaCut™				95	20	72	21	73		22	75		
	PowerCut™					20	72	21	73	58	22	75	59	27 68
	DuraCut™						72		73	58		75	59	27 68

= Narrow kerf

How the Oregon® Guide Bar Part Numbering System Works

Oregon guide bar part numbers are printed on the bar package and etched on the bar body. Here's what each digit means:

18 0 RN D K095

Length (in.)

8
10
11
12
13
14
15
16
18
20
21
22
24
25
26
27
28
30
32
33
34
36
37
42

Gauge (in.)

4 = .043"
0 = .050"
8 = .058"
3 = .063"

Professional Guide Bar Codes

SpeedCut™

TXL = SpeedCut
MP = Narrow kerf sprocket-nose (Pro-Lite®)
MG = Narrow kerf sprocket-nose with Guard Mate holes (Pro-Lite®)

VersaCut™

VXL = VersaCut
SLH = Sprocket-nose (Pro-Lite®)
SLG = Sprocket-nose (Pro-Lite®)
SP = Sprocket-nose (Pro-Lite®)
GP = Sprocket-nose with Guard Mate holes (Pro-Lite®)
GL = Sprocket-nose with Guard Mate holes (Pro-Lite®)

ControlCut™

PXL = ControlCut
SLB = Sprocket-nose (Pro-Lite®)

PowerCut™ formerly Power Match®

RN = Replaceable sprocket-nose
PM = Replaceable sprocket-nose
RW = Replaceable sprocket-nose

DuraCut™ formerly Armor Tip

AT = Solid nose, laser welded tip with wear-resistant alloy

Occasional User Bar Codes

AdvanceCut™ formerly Pro-Am®

SX = Sprocket-nose
PX = Sprocket-nose
GD = Sprocket-nose with Guard Mate holes
ML = Narrow kerf sprocket-nose
SF = Sprocket-nose

Single Rivet formerly Double Guard®

SD = Sprocket-nose
DG = Sprocket-nose with Guard Mate holes
ML = Narrow kerf sprocket-nose

Sprocket Nose Codes

Pitch	Tooth Count
A = 1/4"	10
B = .325"	10 or 12
D = 3/8"	9 or 11
E = 3/8"	7 or 9
F = .404"	10
G = .325"	12
H = 3/8"	11

Solid Nose Code

M Medium (1.33")

Bar Mounts

A041
A061
A074
A089
A095
A218
A318
D009
D024
D025
D033
D096
D176
D196
E031
K041
K095
K216
Z095

Intenz®
T041
T095
T218
T318

Comments:

- In a few cases, where two bars would have the same length in their part numbers but different drive link counts, the letter Z will be used in the bar mount description to distinguish between them (K095 and Z095 for example).
- Chainsaws originally equipped with an Intenz® bar, and saws adapted to take an Intenz® bar, do not have a "bar adjustment pin" for tensioning the chain. Use ONLY an Intenz bar when replacing the guide bar on these saws. See page FOR for important information on Intenz bars.
- PowerCut solid body bars may be stamped with XXX, ZZZ or other letters as they can have different noses installed on the body, thereby changing the part number.
- Guard Mate holes are built into the noses of certain types of Oregon bars and allow the attachment of a Guard Mate tip guard to help reduce the risk of kickback.
- Oregon Sculptor™ carving bar part numbers do not follow the Oregon bar part numbering system.
- Bar types and part numbers printed in *red italics* have been obsoleted. Contact your authorized Oregon distributor for availability.

Guide Bars – Light-Weight Professional

SpeedCut™, VersaCut™, ControlCut™

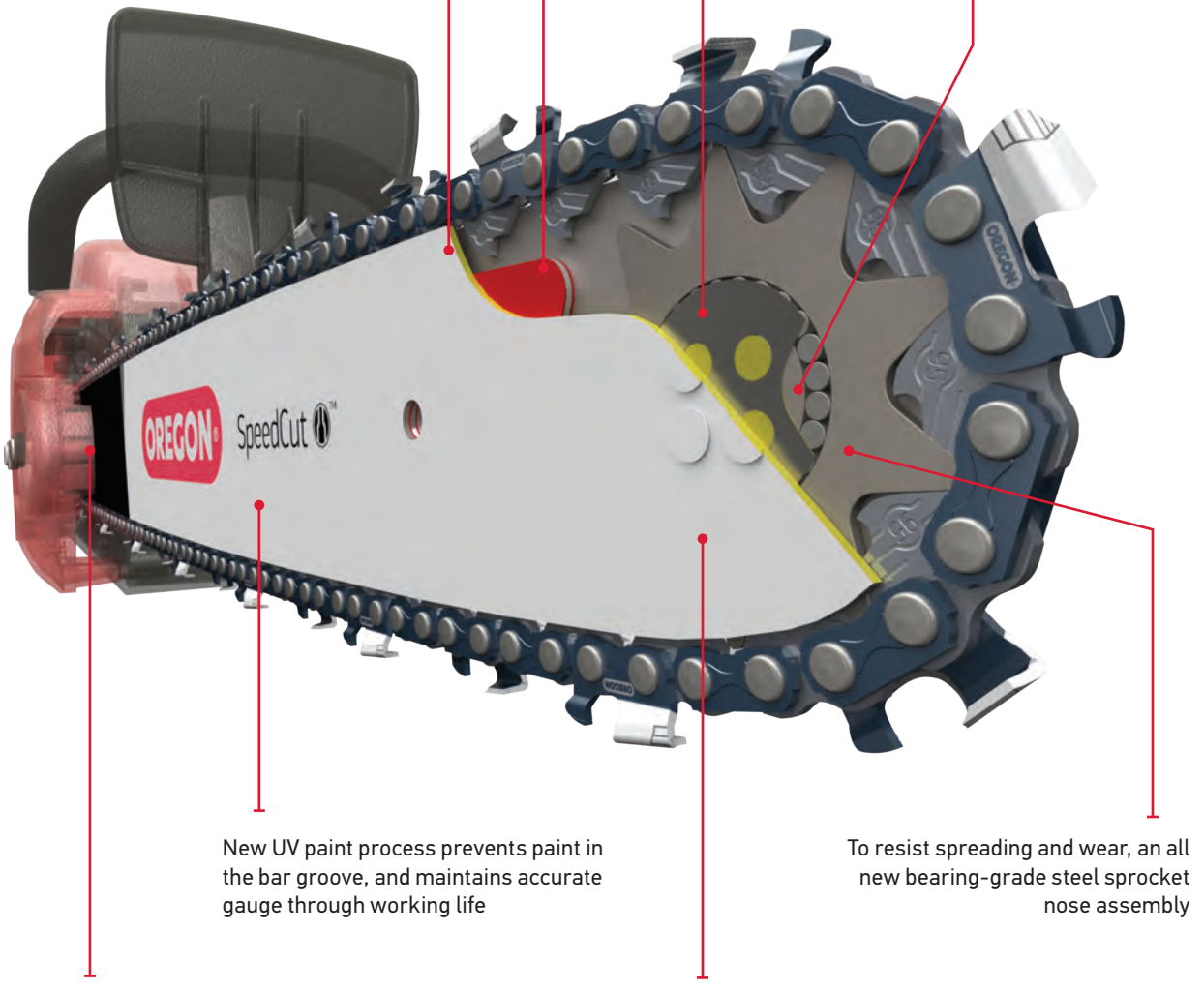

*Compared to an Oregon Pro-Lite bar

SpeedCut™, VersaCut™, ControlCut™

16 0 TXL B K095

Lengths (in)

13
15
16
18
20

SpeedCut Guide Bar Code

TXL = SpeedCut, Narrow Kerf, Sprocket-Nose

Nose Alpha Code & Sprocket Tooth Counts

B	G
10	12

Chain Type by Pitch

Gauge	.325"
0 = .050"	**95TXL**

Tail Mounts

A074
D025
K095

18 0 VXL G K095

Lengths (in)

13
15
16
18
20
24

VersaCut & ConrolCut Guide Bar Codes

VXL = VersaCut, Sprocket-Nose
PXL = ControlCut, Sprocket-Nose

Nose Alpha Code & Sprocket Tooth Counts

B	**G**	H
10	12	11

Chain Types by Pitch

Gauges	.325"	3/8"
0 = .050"	**20**	72
8 = .058"	21	73
3 = .063"	22	75

Tail Mounts

A041
A074
D009
D024
D025
D176
K041
K095
K216

These completely re-designed light-weight professional guide bars are lighter, stronger and longer lasting. Designed for top performance for professional woodcutters.

SpeedCut Perfect for professionals who cut high volumes of wood. The **narrow kerf system** requires less power so your cuts are much faster. SpeedCut lives up to its name because of its lighter weight, durability, and best-in-class efficiency.

VersaCut Ideal solution for arborists, orchardists, and other professionals who encounter every type of tree, shrub, or limb during their work day. VersaCut has the versatility and durability for your ever-changing environment.

ControlCut Made for the work days when you encounter a dozen small jobs and a few larger ones. ControlCut gives you the freedom to use one tool, rather than two or three. The guide bar's smaller-radius nose reduces kickback for smooth cutting.

= Narrow kerf

Features and Benefits

- More precise cutting from a stiffer bar
- Provides better balance on smaller saws
- Lighter weight means less fatigue
- Longer life from a hardier rail
- Longer nose life and better performance with a new sprocket nose system
- Reduced rail wear rate and more precise cutting via better chain fit-up
- LubriTec™ keeps your chain and guide bar oiled, for less friction and longer life

Recommended Saw Sizes – Up to 2.3 – 4.0 cu. in (38 – 65 cc)

Guide Bars – Light-Weight Professional

SpeedCut™ – Part Numbers

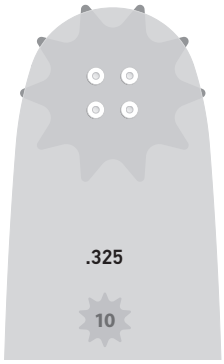

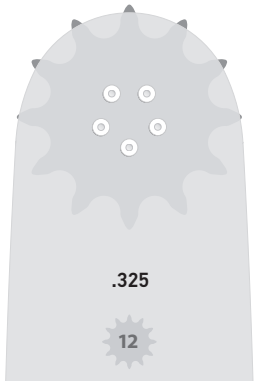

TXLB
SpeedCut

A074
- 160TXLBA074
- 180TXLBA074

D025
- 130TXLBD025

K041
- 160TXLBK041
- 180TXLBK041

K095
- 130TXLBK095
- 150TXLBK095
- 160TXLBK095
- 180TXLBK095
- 200TXLBK095

K216
- 140TXLBK216
- 160TXLBK216
- 180TXLBK216

TXLG
SpeedCut

D025
- 150TXLGD025
- 160TXLGD025
- 180TXLGD025
- 200TXLGD025

K041
- 160TXLGK041
- 180TXLGK041

K095
- 150TXLGK095
- 160TXLGK095
- 180TXLGK095
- 200TXLGK095

K216
- 160TXLGK216
- 180TXLGK216
- 200TXLGK216

SpeedCut guide bars pair with SpeedCut chain to create the next-generation **narrow kerf system** on saws up to 55 cc displacement. SpeedCut is designed to deliver faster cutting and reduced weight compared to standard cutting systems.

ControlCut™ & VersaCut™ – Part Numbers

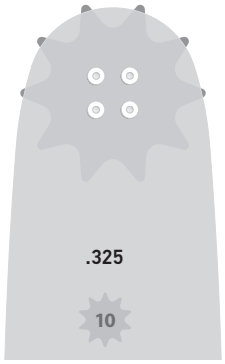

PXLB
ControlCut

A074
- 160PXLBA074
- 163PXLBA074
- 180PXLBA074
- 183PXLBA074

D025
- 133PXLBD025
- 138PXLBD025

K041
- 138PXLBK041
- 158PXLBK041

K095
- 138PXLBK095
- 158PXLBK095
- 168PXLBK095
- 188PXLBK095

ControlCut guide bars are standard-kerf bars that feature a small radius nose for reduced kickback.

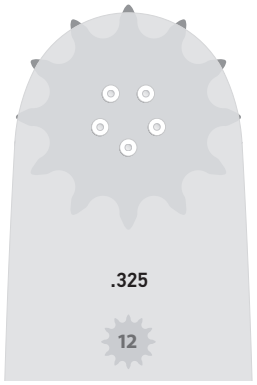

VXLG
VersaCut

D025
- 153VXLGD025
- 160VXLGD025
- 163VXLGD025
- 180VXLGD025
- 183VXLGD025
- 203VXLGD025

K041
- 150VXLGK041
- 158VXLGK041
- 160VXLGK041
- 168VXLGK041
- 180VXLGK041
- 188VXLGK041
- 200VXLGK041
- 208VXLGK041

K095
- 150VXLGK095
- 158VXLGK095
- 160VXLGK095
- 168VXLGK095
- 180VXLGK095
- 188VXLGK095
- 200VXLGK095
- 208VXLGK095

K216
- 160VXLGK216
- 180VXLGK216
- 200VXLGK216

D009
- 180VXLGD009
- 200VXLGD009
- 240VXLGD009

VersaCut guide bars are standard-kerf bars that feature a large radius nose and are designed to perform in a wide range of professional applications.

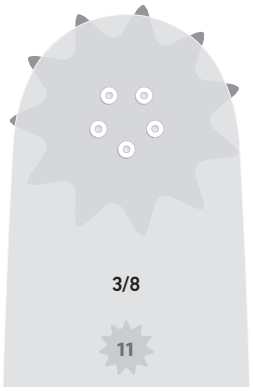

VXLH
VersaCut

D009
- 158VXLHD009
- 160VXLHD009
- 168VXLHD009
- 178VXLHD009
- 180VXLHD009
- 188VXLHD009
- 200VXLHD009
- 208VXLHD009
- 240VXLHD009
- 248VXLHD009

D024
- 168VXLHD024
- 188VXLHD024
- 208VXLHD024

D025
- 153VXLHD025
- 160VXLHD025
- 163VXLHD025
- 180VXLHD025
- 183VXLHD025
- 200VXLHD025
- 203VXLHD025
- 240VXLHD025
- 243VXLHD025

D176
- 160VXLHD176
- 168VXLHD176
- 180VXLHD176
- 188VXLHD176
- 200VXLHD176
- 208VXLHD176

K095 / Z095
- 150VXLHK095
- 158VXLHK095
- 160VXLHK095
- 168VXLHK095
- 180VXLHK095
- 188VXLHK095
- 188VXLHZ095
- 200VXLHK095
- 208VXLHK095

Guide Bars – Professional

PowerCut™ (formerly Power Match®)

18 0 RN D K095

Lengths (in)

13, 15
16, 17
18, 20
21, 22
24, 25
26, 28
30, 32
33, 34
36, 37
42

PowerCut Guide Bar Codes

RN = Replaceable Sprocket-Nose
PM = Replaceable Sprocket-Nose, Pro Finish
RW = Replaceable Sprocket-Nose, Reduced Weight
GN = Replaceable Sprocket-Nose, Guard Mate®

Nose Alpha Code & Sprocket Tooth Counts

B	**D**	F
12	11	10

Chain Types by Pitch

Gauges	.325"	3/8"	.404"
0 = .050"	20	**72**	
8 = .058"	21	73	58
3 = .063"	22	75	27, 59, 68

Tail Mounts

D009
D024
D025
D033
D176
D196
E031
K041
K095
Z095

For loggers and other tree-cutting professionals that need heavy-use guide bars. PowerCut's chrome-moly steel body is tough and powerful, enabling you to cut through timber precisely and efficiently. The replaceable sprocket nose reduces the need for new guide bars, giving the PowerCut bar a longer life and greater durability.

Features and Benefits

- Replaceable bar nose, eliminates need to purchase a new bar
- Nose fastens with a single rivet, and is secured by wide, strong, overlapping ears
- Long nose takes most of the abuse. Less wear to the body.
- Much stronger bar with super tough chrome-moly steel. And tough rails with excellent resistance to wearing and chipping.
- LubriTec™ keeps your chain and guide bar oiled, for less friction and longer life

Recommended Saw Sizes – 3.5 cu. in (58 cc) and larger

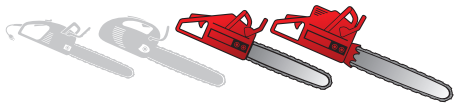

Comments
PowerCut solid body bars may be stamped with XXX, ZZZ or other letters as they can have different noses installed on the body.

PM Pro Finish

- Squared, polished rails minimize chain leaning.

RW Reduced Weight

- 26% lighter than a standard bar at 32" length
- Aluminum core
- Precision milling from a solid bar core, without sacrificing durability

PowerCut™ – Part Numbers

RNB

D025

163RNBD025
183RNBD025

K041

160RNBK041
180RNBK041

K095

158RNBK095
160RNBK095
168RNBK095
188RNBK095
200RNBK095
208RNBK095

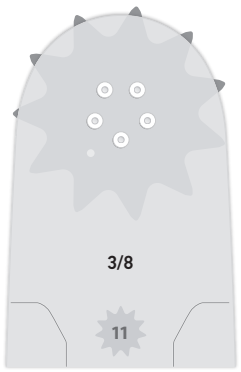

RND • RWD • PMD

D009

138RNDD009
160RNDD009
168RNDD009
178RNDD009
180RNDD009
188RNDD009
200RNDD009
203RNDD009
208RNDD009
228RNDD009
240RNDD009
243RNDD009
248RNDD009
268RNDD009
280RNDD009
280RWDD009 RW
283RNDD009
283RWDD009 RW
288RNDD009
300RNDD009
308RNDD009
320RNDD009
320RWDD009 RW
323RNDD009
323RWDD009 RW
328RNDD009
338PMDD009 PM
343RNDD009
363RNDD009
363RWDD009 RW
368RNDD009
378PMDD009 PM
378RWDD009 RW
423RNDD009
208RNDD024

D025

160RNDD025
163RNDD025
180RNDD025
183RNDD025
200RNDD025
203RNDD025
223RNDD025
240RNDD025
243RNDD025
280RNDD025
280RWDD025 RW
283RNDD025
283RWDD025 RW
300RNDD025
303RNDD025
320RNDD025
320RWDD025 RW
323RNDD025
323PMDD025 PM
343RNDD025
343RWDD025 RW
363RNDD025
363PMDD025 PM
363RWDD025 RW
423RNDD025

D033

208RNDD033

D176

160RNDD176
180RNDD176
200RNDD176
240RNDD176
280RNDD176

D196

160RNDD196
200RNDD196
240RNDD196

K095

160RNDK095
168RNDK095
180RNDK095
188RNDK095
188RNDZ095
200RNDK095
208RNDK095
240RNDK095
248RNDK095
280RNDK095

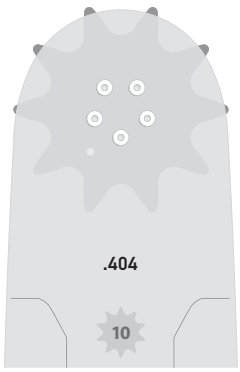

RNF • PMF

D009

363RNFD009
423RNFD009

D025

323RNFD025

E031

213RNFE031
253RNFE031

Guide Bars – Professional

DuraCut™ (formerly Armor Tip)

20 0 AT M K095

Length (in)

16
18
20
24

DuraCut Guide Bar Code

AT = Solid Nose, Laser Welded Tip with Wear-Resistant Alloy

Solid Nose Alpha Code

M = Medium (1.33")

Tail Mounts

D009
D025
D176
K095
Z095

Chain Types by Pitch

Gauge	.325"	3/8"	.404"
0 = .050"	**20**	**72**	
8 = .058"	21	73	58
3 = .063"	22	75	27, 59, 68

Created for all challenging and abrasive environments, including fire-damaged forests, deserts, or sandy environments, and areas where the wood is unstable and requires extra care. DuraCut has an ultra high-wear resistant stellite nose and chrome-moly steel body to give you a longer-lasting tool for the most punishing environments.

Features and Benefits

- Longer life, ultra high-wear resistant stellite alloy
- Much stronger bar due to super tough, chrome-moly steel, and tough rails with excellent resistance to wear and chipping.
- LubriTec™ keeps your chain and guide bar oiled, for less friction and longer life

Recommended Saw Sizes – 2.3 cu. in (38 cc) and larger

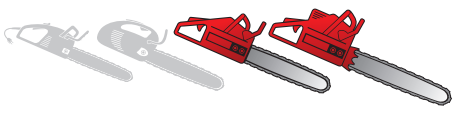

DuraCut™ – Part Numbers

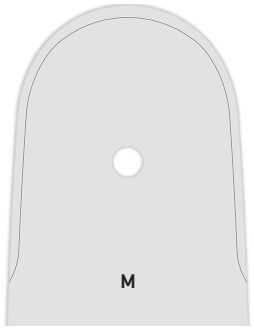

ATM

D009
160ATMD009
168ATMD009
188ATMD009
200ATMD009
203ATMD009
208ATMD009
240ATMD009
288ATMD009
248ATMD009

D025
160ATMD025
163ATMD025
180ATMD025
183ATMD025
200ATMD025
203ATMD025
240ATMD025
243ATMD025

D176
200ATMD176
240ATMD176

K095 / Z095
160ATMK095
168ATMK095
180ATMK095
180ATMZ095
188ATMK095
200ATMK095
200ATMZ095
208ATMK095
160ATMK095
168ATMK095
180ATMK095
188ATMK095
200ATMK095
200ATMZ095
208ATMK095

Guide Bars – Occasional User

AdvanceCut™ (formerly Pro-Am®)

15 0 ML B K095

Lengths (in)

12
13
14
15
16
18
20
24

AdvanceCut Guide Bar Codes

SX = Sprocket-Nose
PS = Sprocket-Nose
GD = Sprocket-Nose with Guard Mate® Holes
ML = Narrow Kerf Sprocket-Nose
SF = Sprocket-Nose

Nose Alpha Code & Sprocket Tooth Counts

E	**B**	G	D	H
9	10	12	9	11

Chain Types by Pitch

Gauges	3/8 LP	.325"	3/8"
0 = .050"	91	**20, 95**	72
8 = .058"		21	73
3 = .063"		22	75

Tail Mounts

A041
A074
A095
A318
D009
D025
D096
D176
K041
K095

Intenz
T041

Exceptional tool for homeowners who regularly cut trees on their properties or yards, as well as farmers and firewood cutters. AdvanceCut is for experienced users who need power and reliability in challenging yard conditions. The multi-rivet nose gives you durability, and AdvanceCut's maneuverability and light-weight help you get the job done quickly.

Features and Benefits

- Slim symmetrical contour is light-weight, easy to maneuver, and is reversible for longer life
- Available in models with the Intenz tensioning mechanism built into the bar itself
- Multi-rivet nose for long-lasting durability
- LubriTec™ keeps your chain and guide bar oiled, for less friction and longer life

Recommended Saw Sizes – Up to 3.5 cu. in (57 cc)

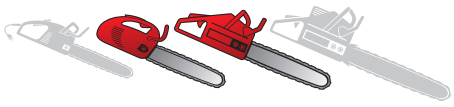

Narrow Kerf

- Thickness of side laminates is reduced to obtain all the advantages of narrow kerf cutting when used in combination with all narrow kerf .325" 95-series chain

AdvanceCut™ – Part Numbers

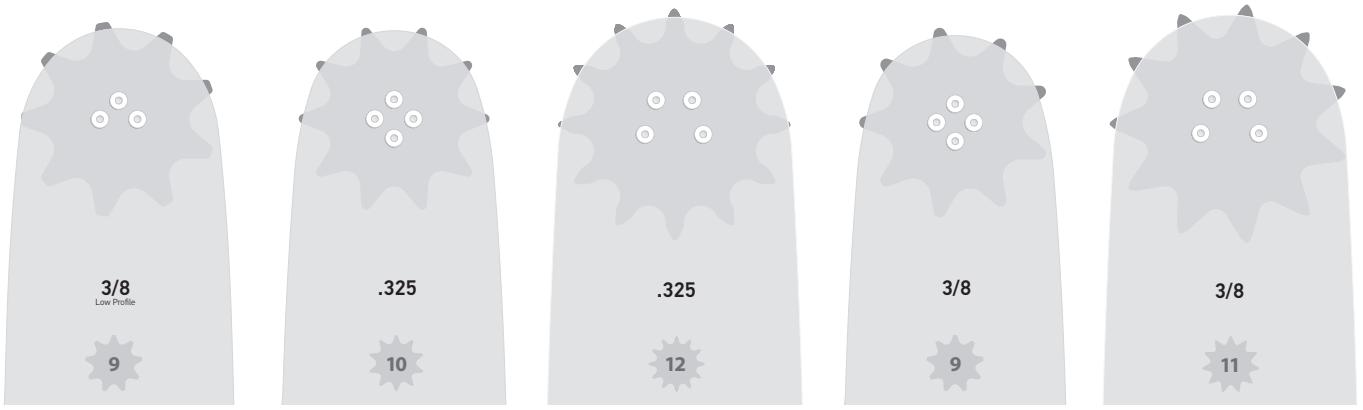

SXE

A041
- 100SXEA041
- 120SXEA041
- 140SXEA041
- 160SXEA041

A074
- 120SXEA074
- 140SXEA074
- 160SXEA074

A095
- 120SXEA095
- 140SXEA095
- 160SXEA095

A318
- 140SXEA318
- 160SXEA318

PXB • MLB • GDB

A074
- 163PXBA074
- 183PXBA074

K041
- 130MLBK041
- 160GDBK041
- 180GDBK041
- 180GDBK041
- 200GDBK041
- 150MLBK041
- 180MLBK041
- 160MLBK041
- 160PXBK041
- 180PXBK041
- 180PXBT041
- 200PXBK041
- 200PXBT041
- 208PXBZ095 NEW

K095
- 130MLBK095
- 150MLBK095
- 160MLBK095
- 180MLBK095
- 158PXBK095
- 168PXBK095
- 180PXBK095
- 188PXBK095
- 200PXBK095
- 208PXBK095
- 208PXBZ095

SFG

D025
- 163SFGD025
- 183SFGD025
- 203SFGD025

K041
- 168SFGK041
- 188SFGK041

K095
- 168SFGK095
- 188SFGK095
- 208SFGK095

PXD • GDD

D096
- 160GDDD096
- 200GDDD096

D176
- 160PXDD176
- 180PXDD176
- 200PXDD176

K041
- 200PXDK041

K095
- 160PXDK095

SFH • GDH

D009
- 168SFHD009
- 188SFHD009
- 200SFHD009
- 208SFHD009
- 240SFHD009
- 248SFHD009

D025
- 160SFHD025
- 163SFHD025
- 183SFHD025
- 200SFHD025
- 203SFHD025
- 240SFHD025
- 243SFHD025

D176
- *160SFHD176*

K095
- 160SFHK095
- 168SFHK095
- 180SFHK095
- 188SFHK095
- 200SFHK095
- 208SFHK095

Narrow Kerf

Intenz®

Guard Mate® compatible

Guard Mate® holes are built into the noses of certain types of Oregon guide bars and allow the attachment of a Guard Mate tip guard to help reduce the risk of kickback.

Part numbers printed in *red italics* have been obsoleted. Contact your authorized Oregon distributor for availability.

Guide Bars – Occasional User

Single Rivet (formerly Double Guard®)

16 0 SD E A041

Lengths (in)

8
10
12
14
16
18

Gauges

4 = .043"
0 = .050"

Single Rivet Guide Bar Codes

SD = Sprocket-nose
DG = Sprocket-Nose with Guard Mate® Holes
ML = Narrow Kerf Sprocket-Nose

Nose Alpha Code & Sprocket Tooth Counts

A	**E**
10	7

Chain Types by Pitch

1/4"	3/8 LP
	90
25	**91**

Tail Mounts

A041
A061
A074
A095
A218
A318
Z041
Z095

Intenz®
T041
T218

For homeowners who only have an occasional need to use a chainsaw. You value quality and reliability, and you're willing to do the tougher yardwork yourself. Single rivet guide bars are safe and maneuverable, with less kickback. They make working on your property quick and easy.

Features and Benefits

- Slim symmetrical contour is light-weight, easy to maneuver, and is reversible for longer life
- Small-radius nose helps reduce kickback.
- Models are available with the Intenz tensioning mechanism built into the bar itself
- Bar mount holes to mount the PowerSharp® bar mount sharpener are available on some models

Recommended Saw Sizes – Electric or gas up to 2.5 cu. in (41 cc)

Single Rivet – Part Numbers

SDA

A041

120SDAA041

140SDAA041

A108

080SDAA108

100SDAA108

MLE

A041

084MLEA041

124MLEA041

144MLEA041

164MLEA041

A074

124MLEA074

144MLEA074

164MLEA074

A218

104MLEA218

124MLEA218

SDE • DGE

A041

080SDEA041

100SDEA041

120DGEA041

120DGET041

120SDEA041 • •

140DGEA041

140DGET041

140SDEA041 • •

140SDET041

160DGEA041 • •

160DGET041

160SDEA041 • •

160SDET041 • •

180DGEA041

180SDEA041 • •

180SDET041 • •

A061

120DGEA061

140DGEA061

160DGEA061

A074

120SDEA074

140SDEA074

160SDEA074

A095

120SDEA095

140SDEA095

160SDEA095

160SDEZ095

180SDEA095

A108

100SDEA108

A218

100SDEA218

104MLEA318

120SDEA218

120SDET218

A318

120SDEA318

140SDEA318

160SDEA318

• • PowerSharp® Compatible

Intenz®

Guard Mate® compatible

Guard Mate® holes are built into the noses of certain types of Oregon guide bars and allow the attachment of a Guard Mate tip guard to help reduce the risk of kickback.

Guide Bars – Carving

Sculptor™

3

Lengths (in)		Solid Nose & Saw Chain		Tail Mounts
10 12 14		Dime Tip (10 mm) Quarter Tip (12 mm)		Multi-Mount: (A041, A074, A095)
		Chain Types		
	Gauges	1/4"	3/8 LP	
	0 = .050"	25A (25F)	91VXL	

An essential tool for chainsaw artists seeking long-lasting performance and versatility.

Features and Benefits

- Manufactured with high-quality steel
- Precision gas-welded high cobalt/chrome alloy hard-facing material for better nose performance and life
- Clear-coated, brushed steel for distinctive and durable appearance and finish

Recommended Saw Sizes – Up to 2.3 – 4.0 cu. in (38 – 65 cc)

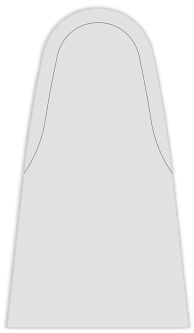

Dime Tip

	Part No.	Bar Length	Drive Link Counts 25A (25F)
041 / 095	535044	10" (25 cm)	60
	535045	12" (30 cm)	68
	535046	14" (35 cm)	76
074	535044	10" (25 cm)	60
	535045	12" (30 cm)	68
	535046	14" (35 cm)	75

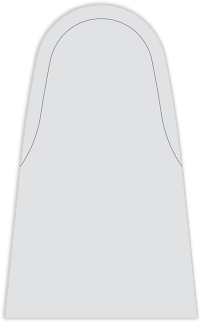

Quarter Tip

	Part No.	Bar Length	Drive Link Counts 25A (25F)	91VXL
041 / 095	535047	12" (30 cm)	68	47
	535048	14" (35 cm)	76	52
074	535047	12" (30 cm)	68	47
	535048	14" (35 cm)	75	51

PowerCut™ RSN Kits

Long nose takes most of the abuse and minimizes wear on the bar body on PowerCut (Power Match®) bars. A single nose for .050", .058", and .063" gauges. Attachment rivet included. (Nose radius 1.115"). Standard RSN kits fit "RN" bars.

OREGON	Description	Pitch – Tooth Count
34775	Standard RSN Kit	.325" – 12
30853	Standard RSN Kit	3/8" – 11
30855	Standard RSN Kit	.404" – 10
523437	Replacement nose attachment rivets 25-pack	

Part numbers printed in *red italics* have been obsoleted.
Contact your authorized Oregon distributor for availability.

PowerCut Pro RSN kits

Made for Pro and reduced-weight PowerCut bars with the features that professional cutters want. Long nose takes most of the abuse and minimizes wear on the bar body. A single nose for .050", .058", and .063" gauges. Attachment rivet included. (Nose radius 1.115"). Pro RSN kits fit "PM" and "RW" bars.

OREGON	Description	Pitch – Tooth Count
543554	Pro RSN Kit PM RW	.325" – 12
39520	Pro RSN Kit PM RW	3/8" – 11
39715	Pro RSN Kit PM RW	.404" – 10
523437	Replacement nose attachment rivets 25-pack	

Guard Mate Bar-Nose Tip Guards

A proven product that reduces the risk of bar-nose kickback. Only for use on bars with Guard Mate holes.

33812

33810

OREGON	Description
33812	Guard Mate Kit – Fits single rivet (Double Guard), 91 & 25 (DG)
33810	Guard Mate Kit – Fits PowerCut (GN), Pro-Lite® (GL, GP, MG) and AdvanceCut™ (GD).

Guide Bars – Discontinued

Pro-Lite® (still available while supplies last)

18 0 SL G K095

Lengths (in)

12
13
14
15
16
18
20

Pro-Lite Guide Bar Codes

SP = Sprocket-Nose
GP = Sprocket-Nose with Guard Mate® Holes
SL = Sprocket-Nose
GL = Sprocket-Nose with Guard Mate Holes
MP = Narrow Kerf Sprocket-Nose
MG = Narrow Kerf Sprocket-Nose, Guard Mate®

Nose Alpha Code & Sprocket Tooth Counts

E	B	**G**	D	H
9	10	12	9	11

Chain Types by Pitch

Gauges	3/8 LP	.325"	3/8"
0 = .050"	91	**20, 95**	72
8 = .058"		21	73
3 = .063"		22	75

Tail Mounts

A041
A064
A074
A095
A318
D009
D024
D025
D176
D196
K041
K095
K216

Intenz®
T041

Sprocket-nose laminated guide bars. Designed for full-time woodcutters who need the best combination of value and professional durability. For cutting clean wood with small to medium-size saws.

Pro-Lite Features and Benefits

- Slim contour, easy to maneuver
- Impressive bar-body strength. Excellent resistance to wear and chipping. Super-tough chrome-moly steel.
- Replaceable nose sprocket kit (except SP and GP bars)

Recommended Saw Sizes – Up to 2.3 – 4.0 cu. in (38 – 65 cc)

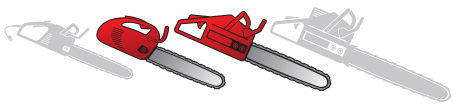

MP & MG

- Thickness of side laminates is reduced to obtain all the advantages of narrow kerf cutting when used in combination with narrow kerf .325" 95VPX and 95TXL chain

Pro-Lite® – Part Numbers (still available while supplies last)

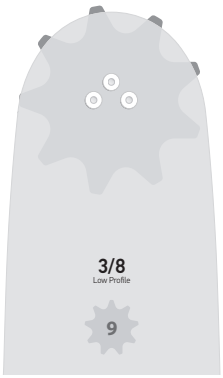

SPE • GPE

A041 / T041

120SPEA041
120GPEA041
140SPET041

160GPEA041
160GPET041
160SPET041

A074

120SPEA074
140SPEA074

A095

120SPEA095
140SPEA095
160SPEA095

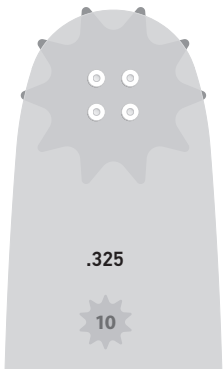

SLB • MPB

A074

163SLBA074
183SLBA074

K095

130MPBK095
138SLBK095
160MPBK095
168SLBK095

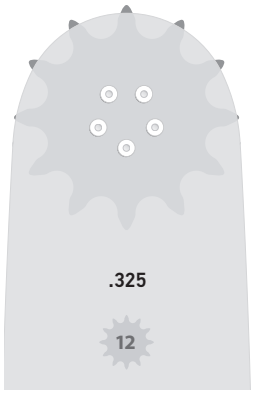

SLG • GLG • MGG • MPG

D025

180SLGD025
183SLGD025
180MPGD025

K041

158SLGK041
160GLGK041
180GLGK041
200GLGK041

K095

150MPGK095
160SLGK095
180SLGK095
188SLGK095
200SLGK095
208SLGK095

K216

160MGGK216
168SLGK216
180GLGK216
180MGGK216
200GLGK216

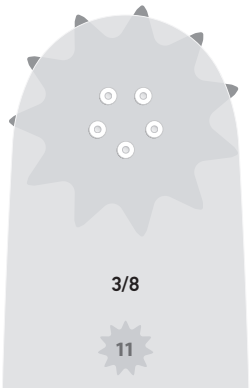

SLH • GLH

D009

180SLHD009
208SLHD009

D025

163SLHD025
180SLHD025
200SLHD025

D176

160GLHD176
200GLHD176

K095

180SLHK095
*188SLHK095***
*39450***

** Correct fit-up for these Oregon bars requires that a 6-digit part number be used in addition to the usual 10-digit part number. Refer to the bar and chain application section for specific saw application requirements. 188SLHK095 is designed for 3/8" – 64 DL. 39450 is designed for 3/8" – 68 DL.

Narrow Kerf Guard Mate® compatible Intenz®

- Bar types and part numbers printed in *red italics* have been obsoleted. Contact your authorized Oregon distributor for availability.
- Guard Mate® holes are built into the noses of certain types of Oregon guide bars and allow the attachment of a Guard Mate tip guard to help reduce the risk of kickback.

Guide Bars

A041

OEM Applications
Craftsman, Cub Cadet, Dolmar, Homelite, Husqvarna, John Deere, Jonsered, Makita, McCulloch, Poulan /Poulan Pro, Redmax, Sears, Shindaiwa, Skil, Snapper, Tanaka, Toro, and others

A041

T041 **Intenz®** mount

- Carlton® mount – 10
- Windsor® mount – PKU

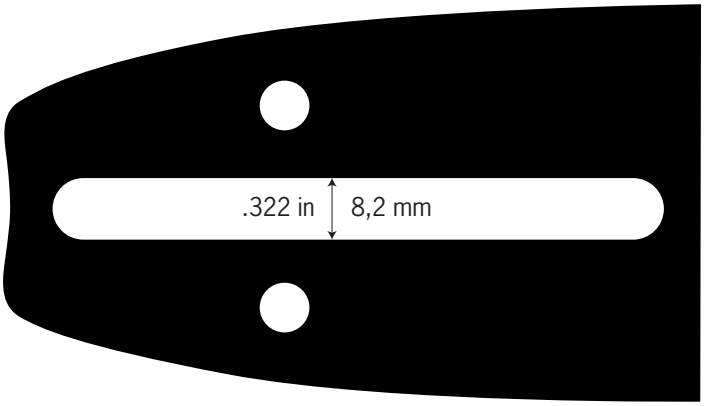

A061

OEM Applications
Homelite

A061

- Carlton mount – 28
- Windsor mount – MXL

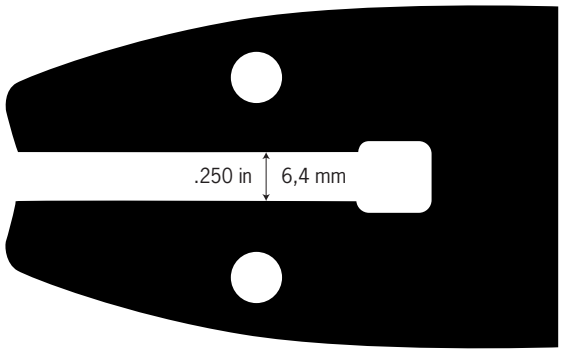

A074

OEM Applications
Stihl, Olympyk (Oleo-Mac)

A074

- Carlton mount – 26
- Windsor mount – ST

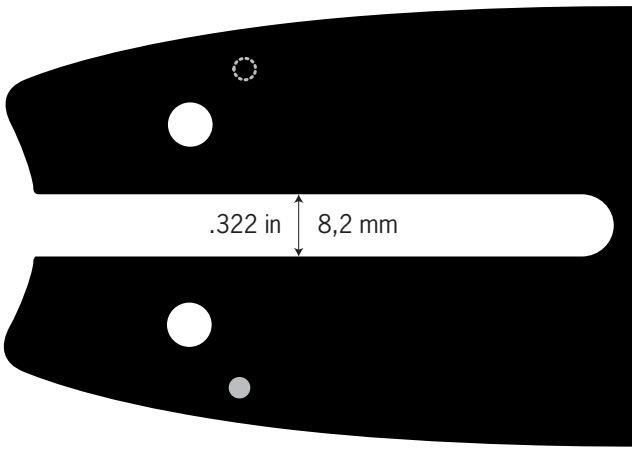

A089

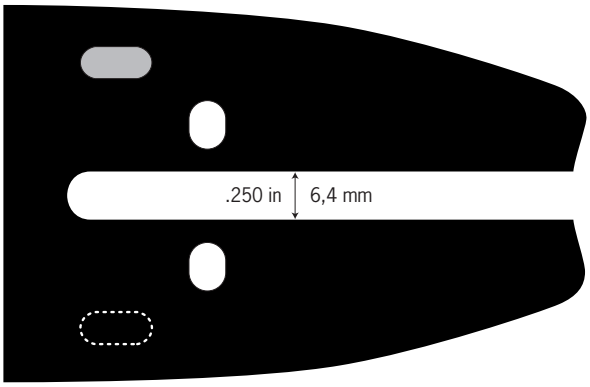

OEM Applications
Remington

A089

- Carlton® mount – 39

A095

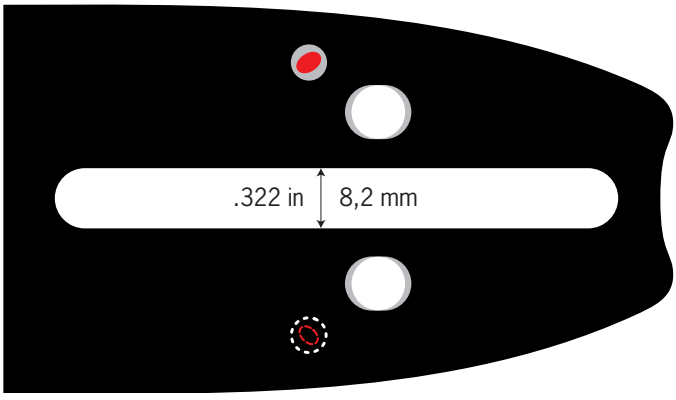

OEM Applications
Cub Cadet, Dolmar, Homelite, Husqvarna, John Deere, Jonsered, Makita, Maruyama pole saws, McCulloch, Olympyk (Oleo-Mac) Partner, Pioneer, Poulan/Poulan Pro, Redmax, Sears, Solo, Stanley, and others

A095	
T095	**Intenz**® mount

- Carlton mount – 01
- Windsor® mount – CJL

A218

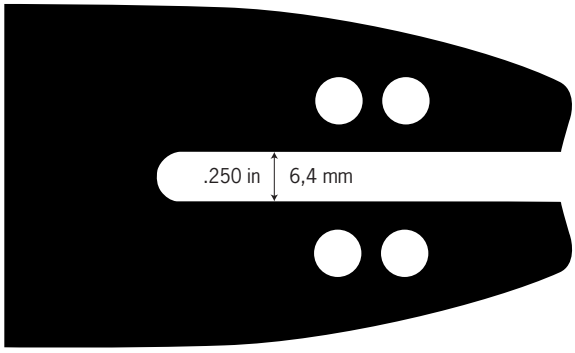

OEM Applications
Black+Decker, Maruyama pole saws,
Power Pruner/Echo Power Pruner, Redmax pole saws

A218	
T218	**Intenz** mount

- Carlton mount – 29

A318

OEM Applications
McCulloch, Remington

A318
T318 **Intenz**® mount

- Carlton® mount – 38
- Windsor® mount – MC

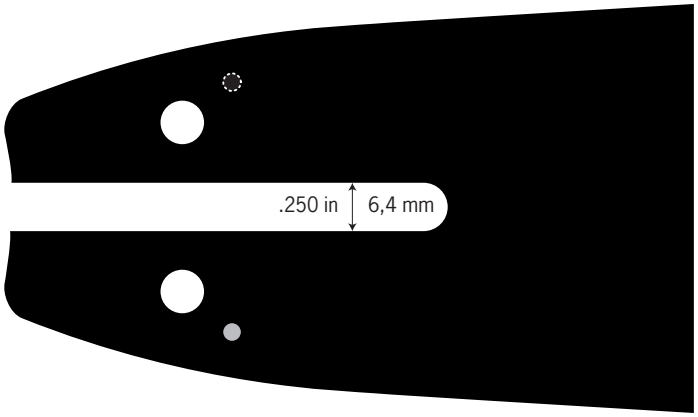

K041

OEM Applications
Craftsman, Cub Cadet, Dolmar, Homelite, Husqvarna, John Deere, Jonsered, Makita, McCulloch, Poulan /Poulan Pro, Redmax, Sears, Shindaiwa, Skil, Snapper, Tanaka, Toro, and others

K041
T041 **Intenz** mount

- Carlton mount – 10W
- Windsor mount – PKU

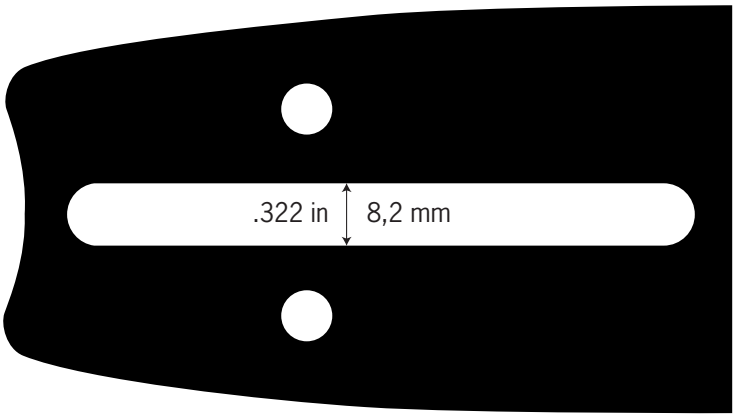

K095

OEM Applications
Cub Cadet, Dolmar, Homelite, Husqvarna, John Deere, Jonsered, Makita, Maruyama pole saws, McCulloch, Olympyk (Oleo-Mac), Partner, Pioneer, Poulan/Poulan Pro, Redmax, Sears, Solo, Stanley, and others

K095*
Z095*

- Carlton mount – 01W
- Windsor mount – CJL

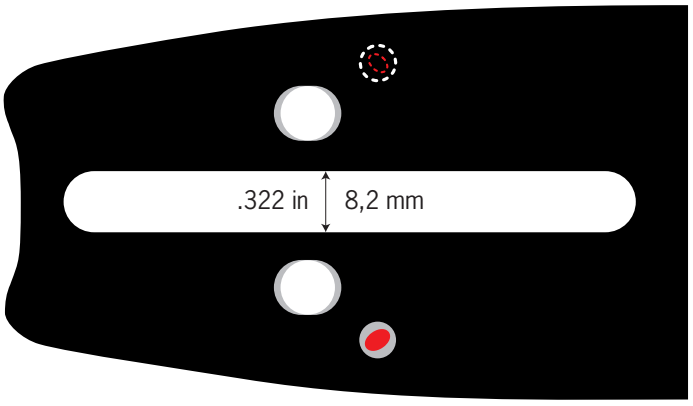

***Note**: In a few cases where two bars would have the same called length but different drive-link counts, the letter Z will be used in the motor-mount description to distinguish between them (K095 and Z095 for example)

K216

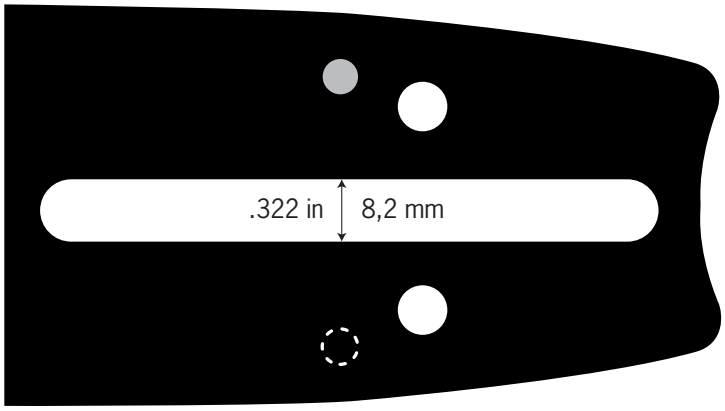

OEM Applications
Echo

K216

D007

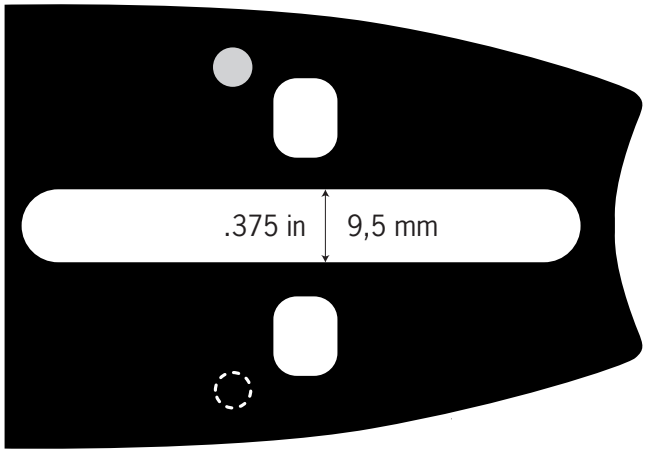

OEM Applications
Pioneer, Poulan/Poulan Pro

D007

- Carlton® mount – 21
- Windsor® mount – PP

D009

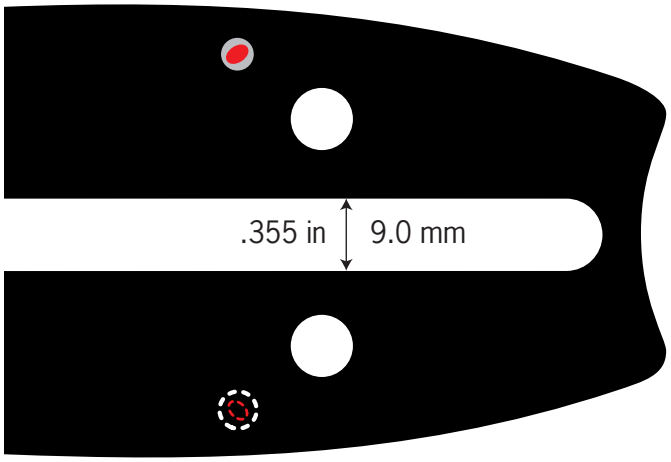

OEM Applications
Dolmar, Husqvarna, Jonsered, Makita, Partner, Shindaiwa, Solo

D009

- Carlton mount – 81
- Windsor mount – EM

D024

OEM Applications
Jonsered, Olympyk (Oleo-Mac)

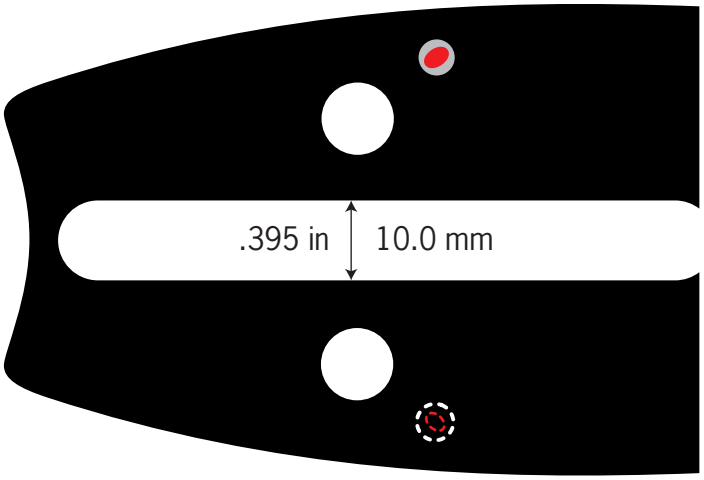

D024

- Carlton® mount – 71
- Windsor® mount – JR

D025

OEM Applications
Stihl

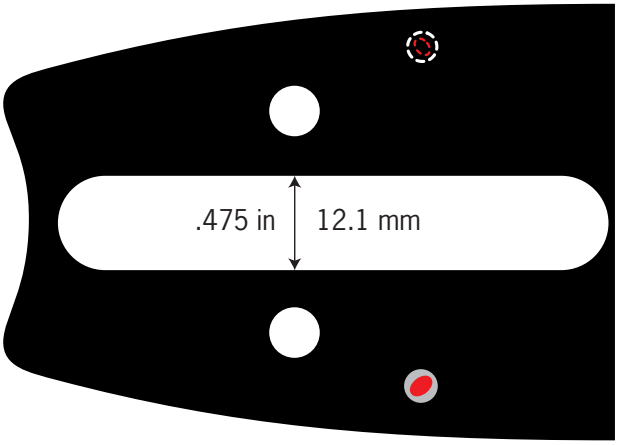

D025

- Carlton mount – 42
- Windsor mount – 40

D033

OEM Applications
Dolmar

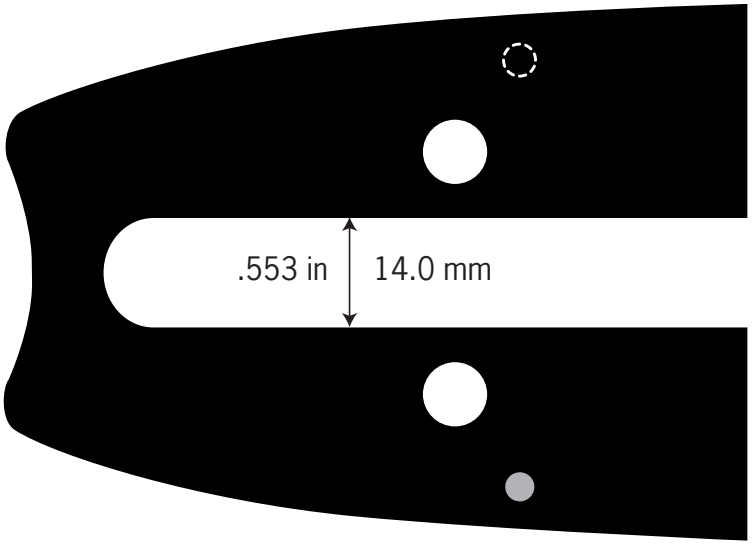

D033

- Carlton mount – 55

D096

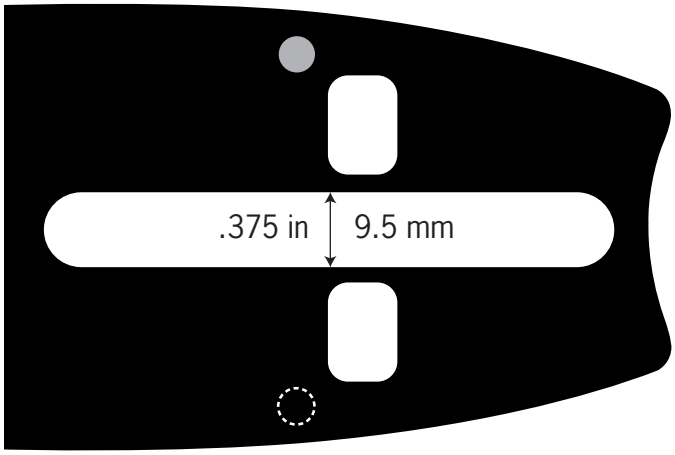

OEM Applications
Echo, Homelite, John Deere, Jonsered, Olympyk (Oleo-Mac), Poulan/Poulan Pro, Remington

D096

- Carlton® mount – 21
- Windsor® mount – HL

D176

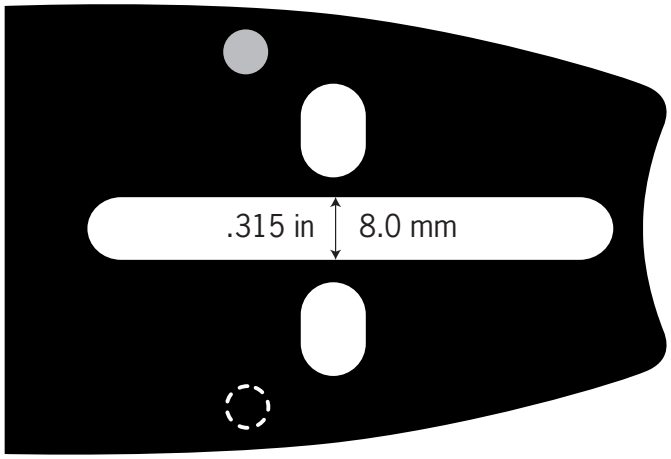

OEM Applications
Echo, Fairmont, John Deere, McCulloch, Poulan/Poulan Pro, Redmax, Sears, Skil, Tanaka

D176

- Carlton mount – 41
- Windsor mount – UXL

D196

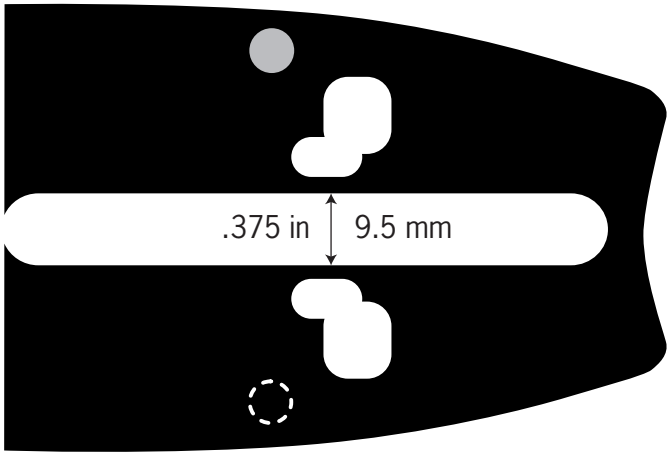

OEM Applications
Echo, Homelite, John Deere, Jonsered, Olympyk (Oleo-Mac), Poulan/Poulan Pro, Remington, Stanley

D196

- Carlton mount – 21
- Windsor mount – HL

E031

OEM Applications
Stihl

E031

- Carlton® mount – 55
- Windsor® mount – 07

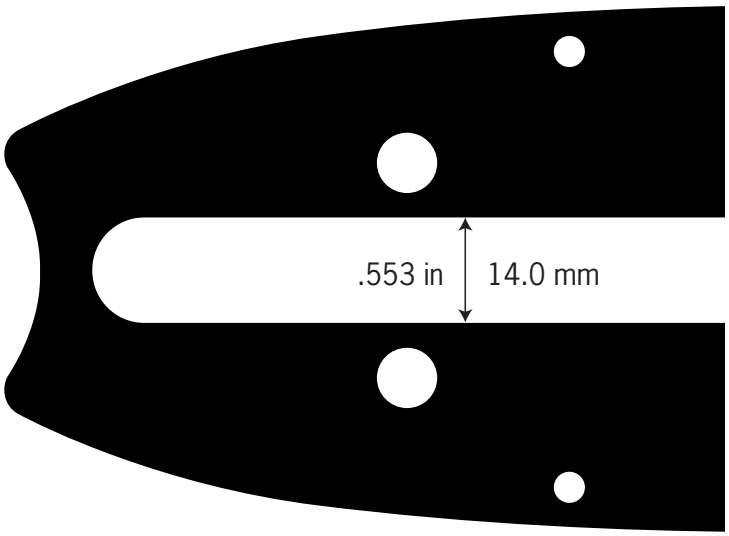

A041 / A074 / A095

Sculptor® Specialty Mount

OEM Applications
Multi-mount fits most popular chain-saws used for carving
Echo, Husqvarna, Stihl and others

SCULPTOR mount	A041 / A095

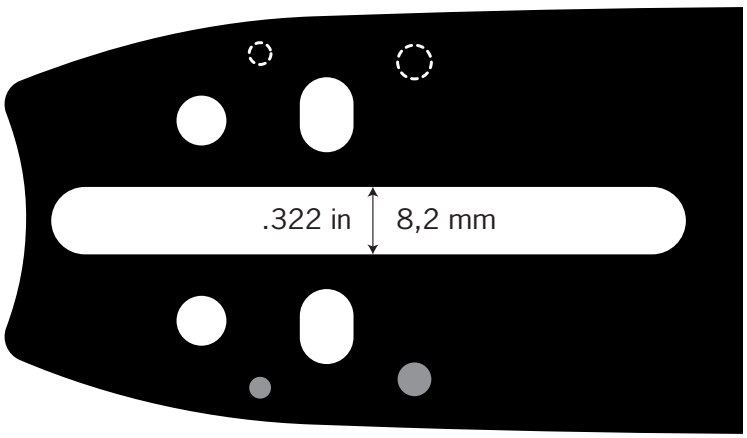

A108

OEM Applications
Unitec and Cob Industry Hydraulic saws

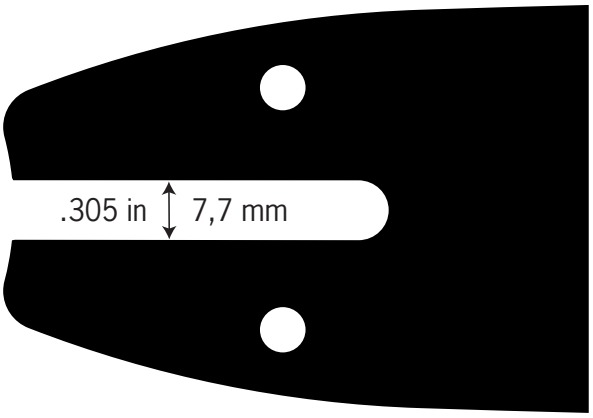

Guide Bars – Troubleshooting

Guide Bar Problems

Chipped rail

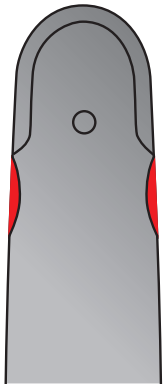

Cause
Chipping of rails behind hard tip. Continual pressure of bar on one area. Dull chain. Loose bar tension

Result
Material chipping out of one or both rails behind the hard tip

Solution
Reverse bar to reduce wear. Replace bar. (This chipping can cause chain damage)

Thin rail and low rail

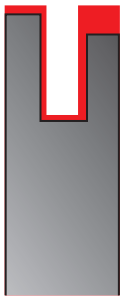

Cause
Chain leaning over, cutting crooked. Forcing dull chain to cut. Damage to cutters on one side of chain

Result
Thin rail on one or both sides of bar. Rail could be blue color in thin area

Solution
Bar cannot be repaired if rail is thin and uneven. Replace it. Make sure chain doesn't continue to lean. If it does, replace with a new chain

Worn bar rails

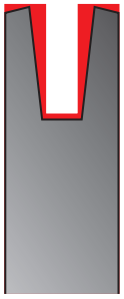

Cause
Worn bar rails are normal for a bar that has been in service for a period of time

Result
Shallow groove

Solution
Replace bar

Wire edge bar rail

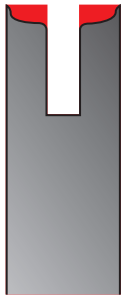

Cause
Normal wear caused by pressure of chain on edges of bar rails

Result
Rail edges may chip if wire edge is not removed

Solution
Use a flat file on edge of bar rail to remove wire edge or Bar Rail Dresser #111439

Sprocket Nose Bar Problems

Blue discoloration on bar nose

Cause
Nose was pinched. Friction from revolving sprocket caused heat and area turned blue. Could be lack of lubrication

Result
Entire edge turns blue or only in one or two spots

Solution
If this happens in the nose bearing area the bar is no longer service-able. Replace bar if laminated bar

Spread nose rails and bearing loss

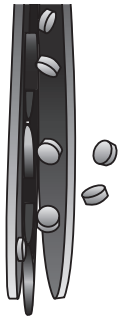

Cause
Chain jumped off bar. Carving with nose. Limb caught nose. Twisting nose. Any operating accident

Result
Spread nose rails and loss of bearings

Solution
Replace bar or replace nose of RSN bar

Sprocket Nose Bar Problems

Chipping at nose connection (replaceable nose)

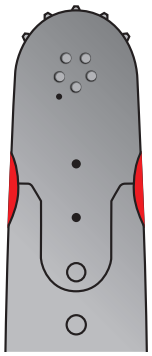

Cause
Loose chain tension. Continual pressure in this area. Heavy limbing at this point

Result
Chipping at connection of both body and nose assembly

Solution
Replace nose assembly and dress rail of bar and nose to match

Section broken out of sprocket

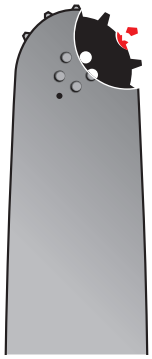

Cause
Irregular operating condition which forced drive link sideways. Throwing the chain when limbing. Chain tension run too loose

Result
Open nose. Broken sprocket. Bearings fall out. One or two broken teeth

Solution
Replace bar nose assembly.

Basic Guide Bar Maintenance Tasks

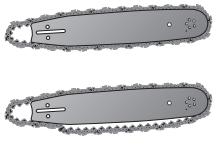

Chain Tension
Inspect before use and after every hour of use

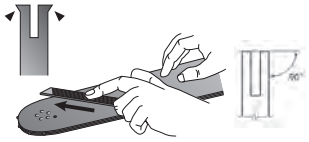

File Bar Edge
File bar edge to 90° weekly or use Bar Rail Dresser #111439

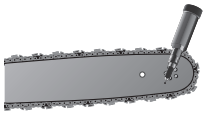

Bar Nose Grease
Turn nose sprocket while pumping grease until whole sprocket has new grease. Do not push dirt into hole

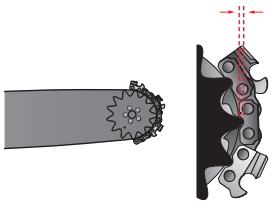

Bar Tip Clearance
On sprocket nose bars, check for clearance around the bar tip between top of rails and the bottom of cutters or tie straps weekly. Replace nose sprockets before cutters or tie straps contact the bar rails

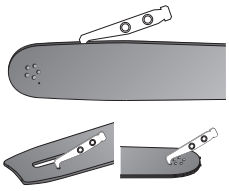

Bar Cleaning
Clean bar channel, grease hole and, oil hole daily

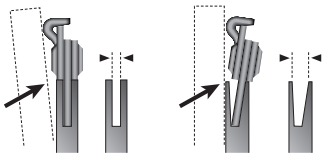

Chain Lean
With chain on the bar, hold a straight-edge against the bar body and against a cutter side plate. A good groove will hold the chain straight, leaving a small gap between the straight edge and bar body. A worn groove will let the chain lean until straightedge is flush with bar body. Replace bar if groove is worn. Check weekly

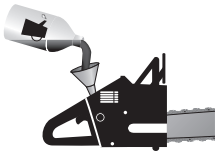

Chain and Bar Oil
Inspect before use and after every hour of use

OREGON

SPROCKETS

Select the Right Sprocket . . . . . FOR 182

Power Mate® Rim Sprocket Systems . . FOR 183

Oregon® Rims . . . . . FOR 184

Pro Spur® Sprockets . . . . . FOR 185

Spur Sprockets . . . . . FOR 186

Application by Saw Model. . . . . FOR 187–203

Application by Oregon Number . . . FOR 204–208

Sprockets Troubleshooting . . . . . FOR 209–210

Sprockets

Selecting The Right Sprocket

Oregon® offers multiple options for different sprocket needs. The sprocket, chain, and guide bar make up the cutting system. The sprocket is an essential component of this system. The chart below will help you select the right sprocket for your system.

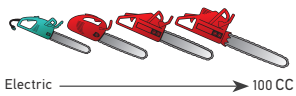

		4	0			8			3		
		.043"	.050"			.058"			.063"		
Good	Spur Sprockets	3/8 low pro	1/4	3/8 low pro	.325	3/8	.325	3/8	.404	.325	3/8	.404
		90	25	91	95 20		21			22		
Better	Pro Spur® Sprockets				95 20	72	21	73	58	22	75	59 27 68
Best	Power Mate® Rim Sprocket System		25		95 20	72	21	73	58	22	75	59 27 68

Power Mate® Rim Sprocket Systems

The most effective sprocket for all types of chainsaw users.

- Extend operational life by maximizing chain and bar groove alignment, while reducing overall costs
- A two-piece design includes a drum with a replaceable rim, allowing the rim to be replaced multiple times before the entire unit is replaced
- Replacement schedule: Every three rims

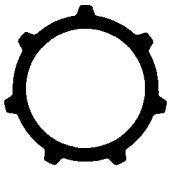

Small 7 Spline (SM7)

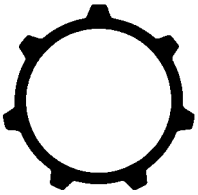

Standard 7 Spline (SD7)

1/4" Pitch	.325" Pitch		3/8" Pitch	3/8" Pitch	.404" Pitch
9-Tooth	7-Tooth	8-Tooth	7-Tooth	7-Tooth	7-Tooth
544658X	*19117*	*24139X*	*21358X*	*13916X*	10612X
544679X	*29105*		29917X	*18200X*	10625X
544680X	29175X		34162X	*22209*	22132X
544689X	30384X		34425X	26831	*22262X*
552412	*32457X*		*38824X*	*27189X*	35460X
	34474X		513470X	28094X	*37969X*
	35641X			*29313X*	*108818X*
	40068			35464X	
	41726X			*36868X*	
	100758X			38470X	
	100791X			*68209X*	
	100961X			100757	
	108215X			102469	
	111177X			105772X	
	111178X			106593X	
	513442			108565X	
	513447			111450X	
	513472X			111590X	
	582642			509604X	

Attention Dealers: Some Oregon® Power Mate systems have bearings installed, but some do not. Part numbers ending with a number have bearings installed. Part numbers ending with the letter "X" do not. Bearings must be purchased separately for all rim systems having part numbers that end with an X. See the facing page for information on replacement rims. See bearing fit up info starting on page FOR 204–208.

Sprockets

Oregon® Rims

Rims provide the ultimate cutting system performance.

- Smoother cutting and less chain wear than spur sprockets
- Radial port design uses centrifugal force to throw off sawdust and debris
- Wear-depth indicators show when it's time to replace the rim
- Replacement schedule: every two chain loops

Radial port

Wear-depth indicators

4

Small 7 Spline (Sm7)

1/4" Pitch

9-Tooth

.325" Pitch

7-Tooth

8-Tooth

3/8" Pitch

7-Tooth

Standard 7 Spline (Sd7)

.325" Pitch

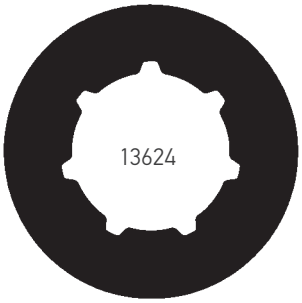

9-Tooth

3/8" Pitch

7-Tooth

8-Tooth

.404" Pitch

7-Tooth

RP Radial Port WI Wear Indicators

NOTE: Oregon Rims are packaged in 10-packs. For other ordering multiples, check with your authorized Oregon distributor for availability.

Power Mate® Rim Sprocket System Additional Components

Dust Covers / Oil Pump Drivers

Washers

Bearings

Neoprene Seals

Retainer Rings

NOTE: Additional components are available separately and part numbers are listed in the charts on pages FOR 204–208.

Pro Spur® Sprockets

Superior performance and value for professional users who prefer a spur sprocket.

- Rugged and dependable, with excellent wear resistance.
- A one-piece design that must be replaced as a complete unit
- Replacement schedule: Every two chain loops

7-Tooth

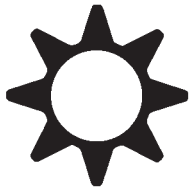

8-Tooth

7-Tooth

7-Tooth

.325" Pitch		3/8" Pitch	.404" Pitch
100876X	*38071X*	30681X	32669X
108308X		*32057*	
111185X		32058	
111435X		32060X	
38076X		*32061X*	
41725X		32063X	
513444		*32064X*	
513445		*32071*	
513471X		*32782X*	
542126		32786X	
577331		32794X	
		38075X	
		38145X	
		38471X	

Part numbers printed in *red italics* have been obsoleted. Contact your authorized Oregon® distributor for availability.

Attention Dealers: Some Oregon spur sprockets have bearings installed, but some do not. Part numbers ending with a number have bearings installed. Part numbers ending with the letter "X" do not. Bearings must be purchased separately for all rim systems having part numbers that end with an X. See bearing fit up info starting on pages FOR 204–208.

Pro Spur Sprocket Additional Components

Dust Covers / Oil Pump Drivers

Washers

Bearings

Neoprene Seals

NOTE: Additional components are available separately and part numbers are listed in the charts on pages FOR 204–208.

Sprockets

Spur Sprockets

A simple, durable design for electric and small gas saws.

- Economical with good wear resistance
- A one-piece design that must be replaced as a complete unit
- Replacement schedule: every two chain loops

4

8-Tooth 1/4" Pitch	6-Tooth* 3/8" Pitch, Low Profile™		7-Tooth .325" Pitch
554045X	27958	104440X	106068X
544531	27999	106114	106656X
544554	28000	106906X	106657X
544555	28001	108567	106658X
544675X	28004	112130	*107504X*
544676X	*28005*	112135	524076
544677X	*28006*	508038X	
544678X	28016X	513446	
552665	29888	514678	
	41569X	522963X	
	100962X	523524X	
	104102X	553995	

Attention Dealers: Some Oregon® spur sprockets have bearings installed, but some do not. Part numbers ending with a number have bearings installed. Part numbers ending with the letter "X" do not. Bearings must be purchased separately for all rim systems having part numbers that end with an X. See bearing fit up info starting on pages FOR 204–208.

*For the 6-tooth spur column part numbers, use only with 3/8" Low Profile™ chains (90PX, 91P, 91PX, 91VXL) or the competitive equivalent of the previously listed chains.

Spur Sprocket Additional Components

Washers

Bearings

Bushings

NOTE: Additional components are available separately and part numbers are listed in the charts on pages FOR 204–208.

Sprockets – Application by Saw Models

Chainsaw Model	Pitch	Drive Teeth	Spur Sprocket		Power Mate® System			OEM	Crankshaft Diameter
			Occasional User	Pro	Small 7 (SM7)	Standard 7 (SD7)	Rim		
Allis Chalmers									
75	3/8" (91)	6	*28006*						0.438"
Alpina									
400 450 500	.325"	7		111185X					0.394"
Cub Cadet									
CS5018 CS5220	.325"	7			*111178X*		11892		0.472"
Dayton									
2Z970	3/8" (91)	6	*28006*						0.438"
4Z022 4Z023 4Z109	3/8" (91)	6	28004						0.407"
4Z251	3/8"	7					68210		0.500"
4Z252	3/8"	7							0.563"
4Z397	3/8"	7					68210		0.500"
4Z573	3/8" (91)	6	*28006*						0.438"
7Z627	3/8"	7							0.563"
Dolmar...									
109 (old)	.325"	8					11891	020 223 100	0.472"
	3/8"	7			*38824X*		18720		
109 (pump drive)	.325"	7					11892		0.472"
	3/8"	7					18720		
110 (old)	.325"	8					11891	020 223 100	0.472"
	3/8"	7			*38824X*		18720		
110 (pump drive)	.325"	7					11892		0.472"
	3/8"	7					18720		
111 (old)	.325"	8					11891	020 223 100	0.472"
	3/8"	7			*38824X*		18720		
111 (pump drive)	.325"	7					11892		0.472"
	3/8"	7					18720		
112 113 114	3/8"	7		38075X		*27189X*	68210	119 223 100	0.551"
115 (old)	.325"	8					11891	020 223 100	0.472"
	3/8"	7			*38824X*		18720		
115i (pump drive)	.325"	7					11892		0.472"
	3/8"	7					18720		
116 116Si 117 119 120 120 Super 120Si	3/8"	7		38075X		*27189X*	68210	119 223 100	0.551"
122 123 133 143 CA	3/8"	8				*16372X*	22273	123 223 000	0.590"
PS-34 PS-45	3/8" (91)	6	112130					036 223 060	0.472"
PS-340 PS-341	3/8" (91)	6	112135						0.394"
PS-5105 PS-5105 H	3/8"	7					18720	181 223 062	
PS-6000i	3/8"	7				*111450X*	68210	030 223 100	0.551"

For bearing fit up, see pages FOR 204–208.

Sprockets – Application by Saw Models

Chainsaw Model	Pitch	Drive Teeth	Spur Sprocket		Power Mate® System			OEM	Crankshaft Diameter
			Occasional User	Pro	Small 7 (SM7)	Standard 7 (SD7)	Rim		
...Dolmar									
PS-6400 PS-6400 H PS-6400 W	3/8"	7					68210	038 223 020	
PS6800i	3/8"	7				*111450X*	68210	030 223 100	0.551"
PS-7310 PS-7310 H PS-7910 PS-7910 H PS-7910 W	3/8"	7					68210	957 223 092	
Echo...									
CS-60 CS-60S	3/8"	7		*32782X*			68210	175005-00230	0.551"
CS-280e, CS280ep CS-290	1/4"	8	*544555*						0.315"
	3/8" (91)	6	27999					175005-13931	
CS-300	1/4"	8	*544675X*						0.394"
		9			*544679X*		543767		
	3/8" (91)	6	106906X					175005-13931	
CS-300EVL	1/4"	8	*544555*						0.315"
	3/8" (91)	6	27999					175005-13931	
CS-301	1/4"	8	*544675X*						0.394"
		9			*544679X*		543767		
	3/8" (91)	6	106906X					175005-11530	
CS-302	1/4"	8	*544554*						0.315"
	3/8" (91)	6	28000					175005-11530	
CS-303T	1/4"	8	*544675X*					175005-39133 175005-39131 175005-39132	0.394"
		9			*544679X*		543767		
	3/8" (91)	6	106906X						
CS-305 CS-306	1/4"	8	*544675X*						0.394"
		9			*544679X*		543767		
	3/8" (91)	6	106906X						
CS-315 CS-330EVL	1/4"	8	*544554*						0.315"
	3/8" (91)	6	28000					175005-11530	
CS-330MX4 CS-330T CS-340 CS-341 CS-345 CS-346	1/4"	8	*544675X*						0.394"
		9			*544679X*		543767		
	3/8" (91)	6	106906X					175005-39133 175005-39131 175005-39132	
CS-351	1/4"	8	*544554*						0.315"
	3/8" (91)	6	28000					175005-11530	
CS-355T CS-360T CS-361P	1/4"	8	*544675X*						0.394"
		9			*544679X*		543767		
	3/8" (91)	6	106906X					175005-39133 175005-39131 175005-39132	
CS-370 CS-400	3/8" (91)	6	523524X					175012-00831 A556000400	0.394"
CS-400EVL CS-440EVL	.325"	7		*513444*	513442		11892	175105-14630	0.394"
	3/8"	7					18720		
CS-450 CS-450P	.325"	7					11892	A556000440	
CS-490	.325"	7					11892		
CS-451 CS-452 CS-500	3/8"	7		32794X	*21358X*		18720	175005-14330	0.394"
CS-490 CS-500P CS-501P	.325"	7					11892	A5560001121 A556001120	
CS-510EVL CS-550	3/8"	7		32794X	*21358X*		18720	175005-14330	0.394"
CS-550P	.325"	7					11892	A556001310	

For bearing fit up, see pages FOR 204–208.

Sprockets – Application by Saw Models

Chainsaw Model	Pitch	Drive Teeth	Spur Sprocket		Power Mate® System			OEM	Crankshaft Diameter
			Occasional User	Pro	Small 7 (SM7)	Standard 7 (SD7)	Rim		
...Echo									
CS-600P	3/8"	7					68210	A556000550	
CS-602	3/8"	7							0.394"
CS-610	3/8"	7		32794X	*21358X*		18720	175005-14330	0.394"
CS-650 CS-660	3/8"	7				*29313X*	68210	175005-14330	0.394"
CS-680	3/8"	7					68210	175105-32431	
CS-702 CS-750	3/8"	7							0.394"
CS-800P	3/8"	7					68210	175105-30831 175105-30830	
CS-3000 CS-3350 CS-3400 CS-3450	1/4"	8	*544675X*						0.394"
		9			*544679X*		543767		
	3/8" (91)	6	106906X					175005-39133 175005-39131 175005-39132	
CS-3600 CS-3900	.325"	7		*513444*	513442		11892		0.394"
	3/8"	7					18720		
CS-4000	.325"	7			*34474X*		11892		0.472"
CS-4400	.325"	7		*513444*	513442		11892		
	3/8"	7					18720		0.394"
CS-4500 CS-4600 CS-5000	.325"	7			*34474X*		11892		0.472"
CS-5100 (after S/N 134504)	.325"	7		*513444*	513442		11892		0.394"
	3/8"	7					18720		
CS-5500	.325"	7			*34474X*		11892	175105-19930	0.472"
CS-8000	3/8"	7					68210	175105-30831 175105-30830	
Efco									
152 MT5200	.325"	7			*111178X*		11892	50080023	
156	.325"	7			100758X		11892	50012050	
	3/8"	7				100757	68210		
165	.325"	7			100758X		11892	50012050	
	3/8"	7				100757	68210	50022034	
MT7200	3/8"	7					68210	097000207	
MT8200									
Frontier									
F-35 FB-35	3/8" (91)	6	28001						0.394"
Homelite...									
20 23 27	3/8" (91)	6	108567					A57344	0.313"
	.325"	7	524076						
190	3/8" (91)	6	27958					A95653B	0.375"
240 245	.325"	7					11892		0.375"
	3/8"				38010		18720		
330 360 410	3/8"	7					68210	A94302	0.625"
450 550	3/8"	7		30681X			68210	A95620 A65990	0.625"
2500 2700 3300 3350 3800 3816 3850 4550	3/8" (91)	6	108567						0.313"
	.325"	7	524076						

For bearing fit up, see pages FOR 204–208.

Sprockets – Application by Saw Models

Chainsaw Model	Pitch	Drive Teeth	Spur Sprocket		Power Mate® System			OEM	Crankshaft Diameter
			Occasional User	Pro	Small 7 (SM7)	Standard 7 (SD7)	Rim		
...Homelite									
150AO 350 (2-5/8" clutch) 350HG (2-5/8" clutch) 350SL (2-5/8" clutch)	3/8"	7				*30672X*	68210	A12294 A65987A	0.625"
350 350HG 350SL (3" clutch)	3/8"	7					68210	A94302	0.625"
35SL	3/8"	7					68210		0.625"
EZ EZ 250 AO EZ Auto	3/8"	7				*30672X*	68210	A12294 A65987A	0.625"
i3850b i4150b i4550b	3/8" (91)	6	108567						0.313"
	.325"	7	524076						
Little Red	3/8" (91)	6	27958						0.375"
PS-33	3/8" (91)	6	108567						0.313"
	.325"	7	524076						
SEZ AO	3/8"	7				*30672X*	68210	A12294 A65987A	0.625"
Super 2 Super 2CC	3/8" (91)	6	27958					A95653B	0.375"
Super XL Auto Super XL 925 (with 6-shoe clutch)	3/8"	7		30681X			68210	A95620 A65990	0.625"
SXL Mini AO	3/8"	7				*30672X*	68210	A12294 A65987A	0.625"
UT10901 UT10910 UT10926	3/8" (91)	6	108567						0.313"
	.325"	7	524076						
VI 125	3/8"	7					68210	A94302	0.625"
VI 944 VI 955	3/8"	7		30681X			68210	A95620 A65990	0.625"
VI Super 2	3/8" (91)	6	27958					A95653B	0.375"
XL XL 2									
XL-12 (after S/N 1735838)	3/8"	7		30681X			68210	A95620 A65990	0.625"
XL 76 without brake	3/8"	7				*30672X*	68210	A12294 A65987A	0.625"
XL (76-100 series)	3/8"	7					68210	A94302	0.625"
XL 101	3/8"	7				*30672X*	68210	A12294 A65987A	0.625"
XL (800-924 series) XL Auto	3/8"	7		30681X			68210	A95620 A65990	0.625"
XL Mini	3/8" (91)	6	27958					A95653B	0.375"
XL Mini AO	3/8"	7				*30672X*	68210	A12294 A65987A	0.625"
Husqvarna...									
33 34 35	1/4"	8	*544531*						0.394"
		9			*544680X*		543767		
	3/8" (91)	6	28001					507-1005-51	
36	1/4"	8	*552665*						0.394"
		9			*552412*		543767		
	3/8" (91)	6	41569X						
	.325"	7	106656X	*41725X*	41726X		11892		
37 38	1/4"	8	*544531*						0.394"
		9			*544680X*		543767		
	3/8" (91)	6	28001					507-1005-51	
39	.325"	7			*19117*		11892	501-4573-01	0.438"
40	.325"	7	106658X		35641X		11892	504-5230-04	0.500"

For bearing fit up, see pages FOR 204–208.

Chainsaw Model	Pitch	Drive Teeth	Spur Sprocket		Power Mate® System			OEM	Crankshaft Diameter
			Occasional User	Pro	Small 7 (SM7)	Standard 7 (SD7)	Rim		
...Husqvarna...									
41	1/4"	8	*552665*						0.394"
		9			*552412*		543767		
	3/8" (91)	6	41569X						
	.325"	7	106656X	*41725X*	41726X		11892		
42 (after December 1994)	.325"	7			40068		11892	501-6366-02	0.438"
42 (before April 1994)	.325"	7			*29105*		11892		0.438"
44	.325"	7			*19117*		11892	501-4573-01	0.438"
45 49	.325"	7	106658X		35641X		11892	504-5230-04	0.500"
50 51 55 55 Rancher	.325"	7		*38071X*	29175X		11892	505-3036-52	0.500"
		8			*24139X*		11891		
	3/8"	7			34425X		18720		
						36868X	68210		
61 (after S/N 0510572)	3/8"	7		*32057*		26831	68210	503-7014-01	0.500"
	3/8"	8		*32071*					
61 (before S/N 0510572) 66	3/8"	7				102469	68210	501-8316-01	0.500"
77	3/8"	7		32058		*22209*	68210	501-2559-01	0.500"
		8					22273	501-6747-01	
133	.325"	7			*29105*		11892	501-6366-02	0.438"
136 137	1/4"	8	*552665*						0.374
		9			*552412*		543767		
	3/8" (91)	6	41569X						
	.325"	7	106656X	*41725X*	41726X		11892		
140	.325"	7			*19117*		11892	501-4573-01	0.438"
141 142	1/4"	8	*552665*						0.394"
		9			*552412*		543767		
	3/8" (91)	6	513446						
	.325"	7		513445	*513447*		11892		
154	.325"	7		*38071X*	29175X		11892	505-3036-52	0.500"
		8			*24139X*		11891		
	3/8"	7			34425X		18720		
						36868X	68210		
160	3/8"	7		32058		*22209*	68210	501-2559-01	0.500"
	3/8"	8						501-6747-01	
162	3/8"	7				102469	68210	501-8316-01	0.500"
163 180	3/8"	7		32058		*22209*	68210	501-2559-01	0.500"
	3/8"	8						501-6747-01	
181 185	3/8"	7				28094X	68210	503-6259-03	0.563"
	.404"	7				22132X	22270	501-2930-01 501-5978-01	
234	.325"	7			*29105*		11892	501-6366-02	0.438"
235E 236	1/4"	8	*552665*						0.394"
		9			*552412*		543767		
	3/8" (91)	6	41569X						
	.325"	7	106656X	*41725X*	41726X		11892		
238	.325"	7			*29105*		11892	501-6366-02	0.438"
240S 240SE 240SG	.325"	7			*19117*		11892	501-4573-01	0.438"
240E	1/4"	8	*552665*						0.394"
		9			*552412*		543767		
	3/8" (91)	6	41569X						
	.325"	7	106656X	*41725X*	41726X		11892		
242 (after S/N 3441001)	.325"	7			40068		11892		0.438"
242 (before S/N 3441001)	.325"	7			*29105*		11892	501-6366-02	0.438"
246	.325"	7			40068		11892		0.438"

For bearing fit up, see pages FOR 204–208.

Sprockets – Application by Saw Models

Chainsaw Model	Pitch	Drive Teeth	Spur Sprocket		Power Mate® System			OEM	Crankshaft Diameter
			Occasional User	Pro	Small 7 (SM7)	Standard 7 (SD7)	Rim		
...Husqvarna...									
254 (after S/N 345-0001)	.325"	7			100758X		11892	503-7261-01	0.500"
	3/8"	7					18720		
						100757	68210	503-7009-01	
254 (before S/N 345-1001)	.325"	7		*38071X*	29175X		11892	505-3036-52	0.500"
		8			*24139X*		11891		
	3/8"	7			34425X		18720		
						36868X	68210		
257 (after S/N 314-0001)	.325"	7			100758X		11892	503-7261-01	0.500"
	3/8"	7					18720		
						100757	68210	503-7009-01	
260	3/8"	7		32058		*22209*	68210	501-2559-01	0.500"
		8					22273	501-6747-01	
262XP (after S/N 345-0001)	.325"	7			100758X		11892	503-7261-01	0.500"
	3/8"	7					18720		
						100757	68210	503-7009-01	
262XP (before S/N 345-1001)	.325"	7		*38071X*	29175X		11892		0.500"
		8			*24139X*		11891		
	3/8"	7			34425X		18720		
						36868X	68210		
263	3/8"	7		32058		*22209*	68210	501-2559-01	0.500"
		8					22273	501-6747-01	
266 (after S/N 0510000)	3/8"	7		*32057*		26831	68210	503-7014-01	0.500"
		8		*32071*					
266 (before S/N 0510000)	3/8"	7				102469	68210	501-8316-01	0.500"
268 (after S/N 0510000)	3/8"	7		*32057*		26831	68210	503-7014-01	0.500"
		8		*32071*					
268 (before S/N 0510000)	3/8"	7				102469	68210	501-8316-01	0.500"
272 (after S/N 051000)	3/8"	7		*32057*		26831	68210	503-7014-01	0.500"
		8		*32071*					
272 (before S/N 0510000)	3/8"	7				102469	68210	501-8316-01	0.500"
280	3/8"	7		32058		*22209*	68210	501-2559-01	0.500"
		8					22273	501-6747-01	
281 285 288 298	3/8"	7				28094X	68210	503-6259-03	0.563"
	.404"	7				22132X	22270	501-2930-01 501-5978-01	
334T 335 335XPT 336 338 338XPT 339 339XP	1/4"	8	*544678X*					537-0791-01	0.394"
	3/8" (91)	6	522963X					503-8227-01 503-8222-71	
340SE 340SG	.325"	7			*19117*		11892	501-4573-01	0.438"
340 340e 345 345e	.325"	7		108308X			11892	578-0979-01 503-9800-02	0.500"
346 346XP 346XPG	.325"	7			108215X		11892	503-9800-02	0.500"
350	.325"	7		108308X			11892	578-0979-01	0.500"
351	.325"	7			108215X		11892	503-9800-02	
353 353E-Tech	.325"	7			108215X		11892	503-9800-02	0.500"

For bearing fit up, see pages FOR 204–208.

Chainsaw Model	Pitch	Drive Teeth	Spur Sprocket		Power Mate® System			OEM	Crankshaft Diameter
			Occasional User	Pro	Small 7 (SM7)	Standard 7 (SD7)	Rim		
...Husqvarna									
355 355EPA	.325"	7		108308X	108215X		11892	578-0979-01 503-9800-02	0.500"
	3/8"	7				108565X	68210	503-9348-71	
357 357EPA 357XP 359 359EPA	.325"	7			108215X		11892	503-9800-02	0.500"
	3/8"	7				108565X	68210	503-9348-71	
362 365 371 372 372XP 372XPG	3/8"	7				106593X 105772X	68210	503-9326-01 503-9324-71	0.472"
380	3/8"	7		32058		*22209*	68210	501-2559-01	0.500"
		8					22273	501-6747-01	
385XP 385XPG	3/8"	7				111590X	68210	537-1379-71	0.472"
390XP 390XPW	3/8"	7				111590X	68210	537-1379-71	0.472"
		8					22273	537-1379-72	
	.404"	7					22270	537-1379-02	
394 394XP 395 395XP 395XPG 395XPW	3/8"	7				28094X	68210	503-6259-03 503-6259-01	0.563"
	.404"	7				22132X	22270	501-2930-01 503-6259-04 503-6259-02 501-5978-01	
435 435E 440 440E	3/8" (91)	6	553995						0.472"
	.325"	7		*577331*	582642			505-4415-01	
444	.325"	7			*19117*		11892	501-4573-01	0.438"
445 445E 450 450E 450 Rancher	.325"	7		108308X	108215X		11892	578-0979-01 503-9800-02	0.500"
455 455 Rancher 460 460 Rancher	.325"	7		513471X	513472X		11892	537-2917-02	0.500"
	3/8"	7			513470X		18720		
480	3/8"	7		32058		*22209*	68210	501-2559-01	0.500"
		8					22273	501-6747-01	
545 550XP 550XPG	.325"	7					11892	575-2610-03	
555 560	.325"	7					11892	575-2610-03	
	3/8"	7					18720	575-2610-04	
562XP	.325"	7					11892	575-2610-03	
	3/8"	7					18720	575-2610-04	
562XPG	.325"	7					11892	575-2610-03	
	3/8"	7					18720	575-2610-04	
570 575XP	3/8"	7				106593X	68210	503-9326-01 503-9324-71	0.472"
576XP 576XPG 576XPW	3/8"	7				105772X	68210	502-4404-02	
		8					22273	502-4404-03	
1100 2100 2101	3/8"	7				28094X	68210	503-6259-03	0.563"
	.404"	7				22132X	22270	501-2930-01 501-5978-01	
3120XP Jungle 3120	.404"	7				*37969X*	22270		0.563"
L-65	3/8"	7		32058		*22209*	68210	501-2559-01	0.500"
		8					22273	501-6747-01	

4

For bearing fit up, see pages FOR 204–208.

Sprockets – Application by Saw Models

Chainsaw Model	Pitch	Drive Teeth	Spur Sprocket		Power Mate® System			OEM	Crankshaft Diameter
			Occasional User	Pro	Small 7 (SM7)	Standard 7 (SD7)	Rim		
John Deere...									
25EV	3/8" (91)	6	27999						0.315"
28 30 35 35EV 40V	3/8" (91)	6	28000						0.315"
45	.325"	7			513442		11892		0.394"
	3/8"	7		*513444*			18720		
50V 55EV 55V	3/8"	7		32794X	*21358X*		18720		0.394"
60V	3/8"	7							0.394"
65EV	3/8"	7				*29313X*	68210		0.394"
70V 80V	3/8"	7							0.394"
7600	3/8"	7		32794X	*21358X*		18720		0.394"
CS46 CS52	.325"	7			*111177X*		11892		0.472"
CS56 CS62	.325"	7			100758X		11892		0.500"
	3/8"	7				100757	68210		
CS71 CS81	3/8"	7					68210		0.551"
Green Machine	3/8"	7		32794X	*21358X*		18720		0.394"
Jonsered...									
36	3/8" (91)	6	28001					100551	0.394"
45 49 50 51 52	.325"	8					11892	504 52 30-00	
361 365 370	3/8" (91)	6	28001						0.394"
410 420 425 435	.325"	7	106658X		35641X		11892	504 52 30-04	0.500"
450	.325"	7					11892		0.472"
		8					11891	504 52 30-07	
	3/8"	7			*29496X*		18720	503 17 40-01	
451	.325"	8					11892	504-52-30-00	0.500"
455	.325"	7					11892		0.472"
		8					11891	504 52 30-07	
	3/8"	7			*29496X*		18720	503 17 40-01	
490	.325"	7			29175X		11892	505 30 36-52	0.500"
		8		*38071X*	*24139X*		11891		
	3/8"	7				*36868X*	68210		
510 520	.325"	7					11892		0.472"
		8					11891	504 52 30-07	
	3/8"	7			*29496X*		18720	503 17 40-01	
521	.325"	8					11892	504 52 30-00	0.500"
525 535	.325"	7					11892		0.472"
		8					11891	504 52 30-07	
	3/8"	7			*29496X*		18720	503 17 40-01	
590	.325"	7			29175X		11892	505 30 36-52	0.500"
		8		*38071X*	*24139X*		11891		
	3/8"	7				*36868X*	68210		
625 (after S/N 0510123)	3/8"	7		*32057*		26831	68210	501 83 16-01 503 70 09-01	0.500"
		8		*32071*					
625 (before S/N 0510123)	3/8"	7				102469	68210		0.500"
630 (after S/N 0510000)	3/8"	7		*32057*		26831	68210	501 83 16-01	0.500"
		8		*32071*				503 70 09-01	

For bearing fit up, see pages FOR 204–208.

Chainsaw Model	Pitch	Drive Teeth	Spur Sprocket		Power Mate® System			OEM	Crankshaft Diameter
			Occasional User	Pro	Small 7 (SM7)	Standard 7 (SD7)	Rim		
...Jonsered									
630 (before S/N 0510000)	3/8"	7				102469	68210		0.500"
630 Super (after S/N 0510000)	3/8"	7		*32057*		26831	68210	501 83 16-01	0.500"
		8		*32071*				503 70 09-01	
630 Super (before S/N 0510000)	3/8"	7				102469	68210		0.500"
630 West Coast (after S/N 0510000)	3/8"	7		*32057*		26831	68210	501 83 16-01	0.500"
		8		*32071*				503 70 09-01	
630 West Coast (before S/N 0510000)	3/8"	7				102469	68210		0.500"
670 (after S/N 0510153)	3/8"	7		*32057*		26831	68210	501 83 16-01	0.500"
		8		*32071*				503 70 09-01	
670 (before S/N 0510123)	3/8"	7				102469	68210		0.500"
820 830 910 920 930	3/8"	8				*28563X*	22273		0.551"
1020	3/8"	7					68210		0.551"
2035 2036 2040	3/8" (91)	6	41569X						0.394"
	.325"	7	106656X	*41725X*	41726X		11892		
2041 2045 2050	.325"	7	106658X		35641X		11892	504 52 30-04	0.500"
2051 2054 2055	.325"	7					11892		0.472"
		8					11891	504 52 30-07	
	3/8"	7			*29496X*		18720	503 17 40-01	
2063	.325"	7					11892	503 93 95-71	0.472"
	3/8"						18720		
2065 2071	3/8"	7				106593X	68210	503 93 24-71	0.472"
		8					22273	503 93 24-72	
2095	3/8"	7				28094X	68210		
CS2137	3/8" (91)	6	41569X						0.394"
CS2141 CS2145	.325"	7		108308X				578 09 79-01 503 98 00-02	0.500"
CS2149	.325"	7			108215X		11892		
CS2150 CS2152 CS2153	.325"	7			108215X		11892		0.500"
CS2156 CS2159	.325"	7			108215X		11892	503 98 00-02	0.500"
	3/8"	7				108565X	68210	503 93 48-71	0.500"
CS2163	.325"	7					11892	503 93 95-71	
CS2165 CS2166 CS2171 CS2171WH CS2172	3/8"	7				106593X	68210	503 93 24-71	0.472"
		8					22273	503 93 24-72	
CS2188	3/8"	7				111590X	68210	537 13 79-71	0.472"
		8					22273	537 13 79-72	
CS2234 CS2238	3/8" (91)		41569X						0.394"
CS2240, CS2240S	.325"	7		*577331*	582642			505-4415-01	0.472"
CS2245 CS2250 CS2250s	.325"	7		108308X	108215X		11892	578 09 79-01	0.500"
CS2260WH	.325"	7					11892	575 26 10-01	0.500"
	3/8"						68210	575 26 10-02	

For bearing fit up, see pages FOR 204–208.

Sprockets – Application by Saw Models

Chainsaw Model	Pitch	Drive Teeth	Spur Sprocket		Power Mate® System			OEM	Crankshaft Diameter
			Occasional User	Pro	Small 7 (SM7)	Standard 7 (SD7)	Rim		
Makita									
DCS 34	3/8" (91)	6	112130						0.472"
DCS 340 DCS 341	3/8" (91)	6	112135						0.551"
DCS 430	.325"	8							0.472"
DCS 520i DCS5200i	.325"	7					11891		
	3/8"	7			*38824X*		18720		
DCS 6000i DCS 6800i	3/8"	7				*111450X*	68210		0.551"
DCS 6401 DCS 6421	3/8"	7					68210	957-223-092	
Mastercraft									
54-5659 54-5661 54-5662 54-5663	3/8" (91)	6	28004						0.407"
54-5671	3/8"	7					68210		0.500"
54-5675	.325"	7					11892		0.500"
54-5720 before April '99 54-5721 before April '99 54-5722 before April '99	3/8" (91)	6	29888						0.394"
54-5723 before April '99	3/8"	7		32786X		*68209X*	68210		0.500"
McCulloch...									
515	3/8"	7		32786X		*68209X*	68210	65370	0.500"
538 540	3/8" (91)	6							0.394"
605 610 650 655 700 805 850 855	3/8"	7		32786X		*68209X*	68210	65370	0.500"
2000 2010 2012 2014 2016 2116 2316 2318 3000 3200 3210 3214 3216 3505 3516 3805 3818	3/8" (91)	6	29888					215252	0.394"
Mac 1-10 Mac 2-10 Mac 3-10 Mac 4-10 Mac 5-10 Mac 6-10 Mac 7-10 Mac 8-10 Mac 9-10 Mac 10-10	3/8"	7		32786X		*68209X*	68210	65370	0.500"
Mac 110-140 Mini Mac MS1432 MS1435 MS1838 PM480 Power Mac 310-340 Pro Mac 3205 Av-14	3/8" (91)	6	29888					215252	0.394"

For bearing fit up, see pages FOR 204–208.

Chainsaw Model	Pitch	Drive Teeth	Spur Sprocket		Power Mate® System			OEM	Crankshaft Diameter
			Occasional User	Pro	Small 7 (SM7)	Standard 7 (SD7)	Rim		
...McCulloch									
Pro Mac 55 Pro Mac 60 SP-70 Timber Bear	3/8"	7		32786X		*68209X*	68210	65370	0.500"
Titan 35-40	3/8" (91)	6	29888					215252	0.394"
Montgomery Ward									
TMY24062 TMY24064 TMY24066 TMY24068	3/8" (91)	6	29888						0.394"
TMY24084 TMY24086	3/8"	7		32786X		*68209X*	68210		0.500"
Oleo-Mac (Olympyk)									
251 252 254	3/8"	7				*13916X*	68210		0.472"
260 261 271 272 280 281 284	3/8"	8				*26580X*	22273		0.591"
350 (before 1988) 355	3/8"	7				*13916X*	68210		0.472"
400 460 461 480 481 482	3/8"	8				*26580X*	22273		0.591"
931	3/8" (91)	6	104440X						0.394"
938 941 942 945 946	.325"	7	106068X		*111177X*		11892		0.472"
947	.325"	7			*111178X*		11892		0.472"
951	.325"	7	106068X		*111177X*		11892		0.472"
952	.325"	7			*111178X*		11892		0.472"
956	.325"	7			100758X		11892		0.500"
962	3/8"	7				100757	68210		
965HD	3/8"	7					68210		0.500"
970 980	3/8"	7					68210		0.551"
999F	.404"	7					22270	099900387	
GS820	3/8"	7					68210	097000207	
Oregon									
CS250-S6 CS250-E6 CS250-A6 CS300 CS300-E6 CS300-A6	3/8" (91)	6	546622						
CS1500	3/8" (91)	6	570964						
PS250	3/8" (90)	7	571043						
Partner...									
22 330 350	3/8" (91)	6	28001						0.394"
351	3/8" (91)	6	106114						0.394"

For bearing fit up, see pages FOR 204–208.

Sprockets – Application by Saw Models

Chainsaw Model	Pitch	Drive Teeth	Spur Sprocket		Power Mate® System			OEM	Crankshaft Diameter
			Occasional User	Pro	Small 7 (SM7)	Standard 7 (SD7)	Rim		
...Partner									
365	3/8" (91)	6	41569X						0.394"
	.325"	7	106656X	*41725X*	41726X		11892		
400	.325"	7			35641X		11892		0.500"
405	3/8" (91)	6	41569X						0.394"
	.325"	7	106656X	*41725X*	41726X		11892		
410	.325"	7			35641X		11892		0.500"
421	3/8"	7					68210		0.551"
450 460 490 510	.325"	7			35641X		11892		0.500"
1612 1613 1614 1616	3/8" (91)	6	28001						0.394"
7000 F55 F65	3/8"	7					68210		0.551"
Mini P3 Mini P	3/8" (91)	6	28001						0.394"
P-100 (after March 1977)	3/8"	7					68210		0.551"
P2 P3	3/8" (91)	6	28001						0.394"
P400	.325"	7		*38071X*	29175X		11892		0.500"
P500		8			*24139X*		11891		
P545	3/8"	7			34425X		18720		
P5000 P5100		7				*36868X*	68210		
P70	3/8"	7					68210		0.551"
P-85	3/8"	7					68210		0.551"
PA	3/8" (91)	6	28001						0.394"
R16 R17 R18 R19 R20 R21 R22 R420 S50 S55 S65	3/8"	7					68210		0.551"
Pioneer									
970 1072 1073 1074 2071 2073 Holiday II	.325"	8					11891		0.500"
P-12	3/8" (91)	6	28001						0.394"
P-20 P-21 P-25 P-26 P-28	.325"	8					11891		0.500"
Poulan...									
180 205	3/8" (91)	6	28004					952048078	0.407"
210 221	3/8" (91)	6	106114					952048124	0.394"
225	3/8" (91)	6	28004					952048078	0.407"
230	3/8" (91)	6	106114					952048124	0.394"
235	3/8" (91)	6	28004					952048078	0.407"
245	3/8"	7						530010007	0.563"

For bearing fit up, see pages FOR 204–208.

Chainsaw Model	Pitch	Drive Teeth	Spur Sprocket		Power Mate® System			OEM	Crankshaft Diameter
			Occasional User	Pro	Small 7 (SM7)	Standard 7 (SD7)	Rim		
...Poulan...									
255	3/8" (91)	6	41569X					952048115	0.394"
	.325"	7	106656X	*41725X*	41726X		11892		
260	3/8" (91)	6	106114					952048124	0.394"
285	.325"	7	*107504X*				11892	530048083	0.500"
295	3/8" (91)	6	41569X					952048115	0.394"
	.325"	7	106656X	*41725X*	41726X		11892		
305	.325"	7	*107504X*				11892	530048083	0.500"
306	3/8"	7						530010007	0.563"
325	.325"	7		*38071X*	29175X		11892		0.500"
		8			*24139X*		11891		
330 335 336	.325"	7	*107504X*				11892	530048083	0.500"
375 395	3/8"	7					68210	952048062 48063	0.500"
415 475	3/8"	7					68210	503431001	
1800	3/8" (91)	6	28004					952048078	0.407"
1950	3/8" (91)	6	106114					952048124	0.394"
2000	3/8" (91)	6	28004					952048078	0.407"
2050 2055 2075	3/8" (91)	6	106114					952048124	0.394"
2100	3/8" (91)	6	28004					952048078	0.407"
2150 2155 2175 2250	3/8" (91)	6	106114					952048124	0.394"
2300	3/8" (91)	6	28004					952048078	0.407"
2375	3/8" (91)	6	106114					952048124	0.394"
2400	3/8" (91)	6	28004					952048078	0.407"
2450	3/8" (91)	6	106114					952048124	0.394"
2500	3/8" (91)	6	41569X					952048115	0.394"
	.325"	7	106656X	*41725X*	41726X		11892		
2550	3/8" (91)	6	106114					952048124	0.394"
2600	3/8" (91)	6	41569X					952048115	0.394"
	.325"	7	106656X	*41725X*	41726X		11892		
2700	.325"	7	*107504X*				11892	530048083	0.500"
2750 2775	3/8" (91)	6	41569X					952048115	0.394"
	.325"	7	106656X	*41725X*	41726X		11892		
2800	.325"	7	*107504X*				11892	530048083	0.500"
2900	3/8" (91)	6	41569X					952048115	0.394"
	.325"	7	106656X	*41725X*	41726X		11892		
3000	.325"	7	*107504X*				11892	530048083	0.500"
3050	3/8" (91)	6	41569X					952048115	0.394"
	.325"	7	106656X	*41725X*	41726X		11892		
3300	.325"	7	*107504X*				11892	530048083	0.500"
3314	3/8" (91)	6	514678					530057905	0.313"
3400	3/8"	7					68210	952048062 48063	0.500"
3416	3/8" (91)	6	514678					530057905	0.313"
3700 3800	3/8"	7					68210	952048062 48063	0.500"
3816	3/8" (91)	6	514678					530057905	0.313"
4000	3/8"	7					68210	952048062 48063	0.500"
4018 4018WT	3/8" (91)	6	514678					530057905	0.313"
4200	3/8"	7						530010007	0.563"
4218	3/8" (91)	6	514678						0.313"

4

For bearing fit up, see pages FOR 204–208.

Sprockets – Application by Saw Models

Chainsaw Model	Pitch	Drive Teeth	Spur Sprocket		Power Mate® System			OEM	Crankshaft Diameter
			Occasional User	Pro	Small 7 (SM7)	Standard 7 (SD7)	Rim		
...Poulan									
4620AV 4620AVX	.325"	7	106656X	*41725X*	41726X		11892		0.394"
4400 4900 5200 5400	3/8"	7						530010007	0.563"
25 series (except Micro 25)	3/8" (91)	6	*28006*					952048102	0.438"
Micro 25	3/8" (91)	6	28004					952048078	0.407"
P600	3/8" (91)	6	41569X					952048115	0.394"
	.325"	7	106656X	*41725X*	41726X		11892		
Patriot 1900	3/8" (91)	6	106114					952048124	0.394"
S25	3/8" (91)	6	*28006*					952048102	0.438"
Wild Thing	3/8" (91)	6	106114					952048124	0.394"
RedMax									
G300AV/AVS G300T G300TS G3100TS	3/8" (91)	6	104440X						0.394"
G561AVS G621AVS	3/8"	7		32794X	*21358X*		18720		0.394"
Remington									
Job Master	3/8" (91)	6	*28005*						0.375"
Logger	3/8"	7		30681X			68210		0.625"
Mighty Mite 100-800 Outdoorsman	3/8" (91)	6	*28005*						0.375"
PL-4 PL-5 PL-55 SL-11 Woodsman	3/8"	7		30681X			68210		0.625"
Yardmaster	3/8" (91)	6	*28005*						0.375"
Sears / Craftsman									
35093 35094	3/8" (91)	6	28004						0.407"
35190	3/8" (91)	6	514678					530057905	0.313"
35202 35203 35205	3/8" (91)	6	28004						0.407"
35235 35238 35255 35256	3/8" (91)	6	*28006*						0.438"
35826 35829	3/8"	7		32794X	*21358X*		18720		0.394"
35881 35884	3/8"	7					68210		0.563"
35885	3/8"	7					68210		0.500"
41554 41556 41558	3/8" (91)	6	29888						0.394"
41618	.325"	7					11892		0.500"
351062 351142 351161 351181	3/8" (91)	6	106114						0.394"
351200	.325"	7	*107504X*						0.500"
352161 352180	3/8" (91)	6	106114						0.394"

For bearing fit up, see pages FOR 204–208.

Chainsaw Model	Pitch	Drive Teeth	Spur Sprocket		Power Mate® System			OEM	Crankshaft Diameter
			Occasional User	Pro	Small 7 (SM7)	Standard 7 (SD7)	Rim		
Skil									
310 944 1600 1601 1602 1610 1611 1612 1613 1614 1616	3/8" (91)	6	28001						0.394"
1620 1622 1624	3/8" (91)	6	28004						0.407"
1632	3/8"	7					68210		0.551"
1634	3/8" (91)	6	28004						0.407"
1635 1636	3/8" (91)	6	*28006*						0.438"
1641	3/8"	7					68210		0.500"
1646	3/8"	7					68210		0.551"
1700 1705 1712	3/8" (91)	6	28001						0.394"
Snapper									
S1634 S1838	3/8" (91)	6	106114						0.394"
Solo									
639 644 651 651SP	.325"	7		111435X					0.394"
656-18	.325"	7					11892	350037225	
665-20 675-20	3/8"	7					68210	3500471	
Stihl...									
07S 08	.404"	7				10625X	22270	1106-640-2025	0.591"
009 010 011	1/4"	8	*544677X*						0.394"
		9			*544689X*		543767		
	3/8" (91)	6	28016X					1120-640-2000	
017 018 019 019T	1/4"	8	*544676X*						0.394"
		9			*544658X*		543767		
	3/8" (91)	6	100962X					1123-640-2000	
020 020T	3/8" (91)	6	28016X					1129-640-2000	0.394"
021 023	1/4"	8	*544676X*						0.394"
		9			*544658X*		543767		
	3/8" (91)	6	100962X					1123-640-2000	
	.325"	7	106657X		100961X		11892	1123-007-1003	
024 (before S/N X25809074)	.325"	7		38076X	*32457X*		11892	1121-640-2003 1121-007-1001	0.394"
024 (after S/N X25809074)	.325"	7		100876X	100791X		11892		0.394"
025	1/4"	8	*544676X*						0.394"
		9			*544658X*		543767		
	3/8" (91)	6	100962X					1123-640-2000	
	.325"	7	106657X		100961X		11892	1123-007-1003	
026 (after S/N X25809074)	.325"	7		100876X	100791X		11892	1121-007-1001	0.394"
026 (before S/N X25809074)	.325"	7		38076X	*32457X*		11892	1121-640-2003 1121-007-1001	0.394"
028 028 Super	.325"	7			30384X		11892	1118-007-1004	0.394"
	3/8"	7			29917X		18720	1118-007-1007	

4

For bearing fit up, see pages FOR 204–208.

Sprockets – Application by Saw Models

Chainsaw Model	Pitch	Drive Teeth	Spur Sprocket		Power Mate® System			OEM	Crankshaft Diameter
			Occasional User	Pro	Small 7 (SM7)	Standard 7 (SD7)	Rim		
...Stihl...									
029	.325"	7							0.394"
	3/8"	7		38145X	34162X		18720	1125-640-2000 1125-007-1002	
030 031 032	3/8"	7		32060X		*18200X*	68210	1113-640-2000 1110-007-1040	0.472"
034 034 Super 036	3/8"	7		38145X	34162X		18720	1125-640-2000 1125-007-1002	0.394"
038 038 Super Magnum	3/8"	7		*32061X*		509604X	68210	1119-642-2000	0.472"
039	3/8"	7		38145X	34162X		18720	1125-640-2000 1125-007-1002	0.394"
041 (after S/N 5664891)	3/8"	7		32060X		*18200X*	68210	1113-640-2000 1110-007-1040	0.472"
041 (before S/N 5664891)	3/8"	7				*13916X*	68210	1110-007-1017	0.472"
044	3/8"	7		*38471X*		38470X	68210	1128-640-2000 1128-007-1000	0.394"
045	3/8"	7		32063X				1115-640-2001	0.551"
046	3/8"	7		*38471X*		38470X	68210	1128-640-2000 1128-007-1000	0.394"
048	3/8"	7	*32064X*					1117-640-2000	0.472"
050 051	3/8"	8				*22271X*	22273	1111-640-2026	0.551"
	.404"	7				*22262X*	22270	1116-640-2002 1111-640-2025	
056S (before S/N 1093560)	3/8"	7		32063X				1115-640-2001	0.551"
064 066 066 Magnum	3/8"	7				35464X	68210	1122-007-1001	0.394"
	.404"	7				35460X	22270	1122-007-1002	
070	.404"	7		32669X		*108818X or 10612X*	22270	1106-640-2011	0.591"
075 076	3/8"	8				*22271X*	22273	1111-640-2026	0.551"
	.404"	7				*22262X*	22270	1116-640-2002 1111-640-2025	
MS170 MS171 MS180C MS181 MS181C MS210C MS211 MS211C	1/4"	8	*544676X*						0.394"
		9			*544658X*		543767		
	3/8" (91)	6	100962X					1123-640-2000	
MS 200T MS 201T MS 201C-E	1/4"	8	*554045X*						0.394"
	3/8" (91)	6	28016X					1129-640-2000	
MS 210 MS 230	1/4"	8	*544676X*						0.394"
		9			*544658X*		543767		
	3/8" (91)	6	100962X					1123-640-2000	
	.325"	7	106657X		100961X		11892	1123-007-1003	
MS 250 MS 250C	1/4"	8	*544676X*						0.394"
		9			*544658X*		543767		
	3/8" (91)	6	100962X					1123-640-2000	
	.325"	7	106657X		100961X		11892	1123-007-1003	
MS 260 MS 260 Pro MS 270 MS 270C	.325"	7		100876X	100791X		11892	1121-007-1001	0.394"
MS 290 Farm Boss	.325"	7					11892	1125 007 1003	0.394"
	.325	8					11891		
	3/8"	7		38145X	34162X		18720	1125 640 2004 1125 007 1041	
MS 310 MS 311 MS 360	3/8"	7		38145X	34162X		18720	1125-640-2000 1125-007-1002	0.394"

For bearing fit up, see pages FOR 204–208.

Sprockets – Application by Saw Models

Chainsaw Model	Pitch	Drive Teeth	Spur Sprocket		Power Mate® System			OEM	Crankshaft Diameter
			Occasional User	Pro	Small 7 (SM7)	Standard 7 (SD7)	Rim		
...Stihl									
MS 361	3/8"	7		*38471X*		38470X	68210	1128-640-2000 1128-007-1000	0.394"
MS 362	.325"	9					13624	1128 007 1011	0.394"
	3/8"	7		*38471X*		38470X	68210	1128 640 2000 1128 007 1000	
		8					22273	1128 007 1001	
MS 390 MS 391	3/8"	7		38145X	34162X		18720	1125-640-2000 1125-007-1002	0.394"
MS 440 MS 460 MS 461	3/8"	7		*38471X*		38470X	68210	1128-640-2000 1128-007-1000	0.394"
MS 441 Magnum	3/8"	7		*38471X*		38470X	68210	1128 640 2000 1128 007 1000	0.394"
		8					22273	1128 007 1001	
MS 650 MS 660	3/8"	7				35464X	68210	1122-007-1001	0.394"
	.404"	7				35460X	22270	1122-007-1002	
S-10	.404"	7				10625X	22270	1106-640-2025	0.591"
Tanaka									
ECS-3500	3/8" (91)	6	508038X						0.394"
ECS-4000 ECS-415	.325"	7							0.394"
Western Auto									
012 014 110 112 214 1800 2000	3/8" (91)	6	28004						0.407"
316	3/8" (91)	6	*28006*						0.438"
3400	3/8"	7					68210		0.500"
4010	3/8" (91)	6	28004						0.407"
A-18	3/8"	7					68210		0.500"
AV16	3/8" (91)	6	*28006*						0.438"
S25DA	3/8" (91)	6	28004						0.407"
Wizard Models	3/8" (91)	6	*28006*						0.438"

For bearing fit up, see pages FOR 204–208.

Sprockets – Application by Oregon® Number

Oregon Part Number	Bearing	Additional Components	Sprocket Type	Pitch – Drive Teeth	Chainsaw Model
10612X	37825		Power Mate® SD7	.404" – 7	**Stihl:** 070
10625X	37431		Power Mate SD7	.404" – 7	**Stihl:** 07S, 08, S-10
13916X	31153		Power Mate SD7	3/8" – 7	**Olympyk:** (Oleo-Mac) 251, 252, 254, 350 (before 1988), 355 **Stihl:** 041 (before S/N 5664891)
16372X	16204		Power Mate SD7	3/8" – 8	**Dolmar:** 122, 123, 133, 143, CA
18200X	31153	DC 38226	Power Mate SD7	3/8" – 7	**Stihl:** 030, 031, 032, 041 (after S/N 5664891)
19117	105761		Power Mate SM7	.325" – 7	**Husqvarna:** 39, 44, 140, , 240S, 240SE, 240SG, 340 SE, 340SG, 444
21358X	37507	W 27116	Power Mate SM7	3/8" – 7	**Echo:** CS-451, CS-452, CS-500, CS-510 EVL, CS-550, CS-610 **John Deere:** 50V, 55EV, 55V, 7600, Green Machine **Redmax:** G561AVS, G621AVS **Sears:** 35826, 35829
22132X	21276	DC 22148 NS 37986	Power Mate SD7	.404" – 7	**Husqvarna:** 181, 185, 281, 285, 288, 298, 394, 394XP, 395, 395XP, 395XPG, 395XPW, 1100, 2100, 2101
22209	12733	DC 22148 NS 37986	Power Mate SD7	3/8" – 7	**Husqvarna:** 77, 160, 163, 180, 260, 263, 280, 380, 480, L-65
22262X	37495		Power Mate SD7	.404" – 7	**Stihl:** 050, 051, 075, 076
22271X	37495		Power Mate SD7	3/8" – 8	**Stihl:** 050, 051, 075, 076
24139X	11893		Power Mate SM7	.325" – 8	**Husqvarna:** 50, 51, 55, 55 Rancher, 154, 254 (before S/N 345-0001), 262 (before S/N 345-0001) **Jonsered:** 490, 590 **Partner:** P400, P500, P545, P5000, P5100 **Poulan/Poulan Pro:** 325
26580X	13061		Power Mate SD7	3/8" – 8	**Olympyk:** (Oleo-Mac) 260, 261, 271, 272, 280, 281, 284, 400, 460, 461, 480, 481, 482
26831	11893	W 26908 DC 25047	Power Mate SD7	3/8" – 7	**Husqvarna:** 61 (after S/N 0510572), 266 (after S/N 0510000), 268 (after S/N 0510000), 272 (after S/N 0510000) **Jonsered:** 625 (after S/N 0510123), 630 (after S/N 0510000), 630 Super (after S/N 0510000), 630 West Coast (after S/N 0510000), 670 (after S/N 0510153)
27189X	16204		Power Mate SD7	3/8" – 7	**Dolmar:** 112, 113, 114, 116, 116SI, 117, 119, 120, 120SI, 120 Super
27958	28034		Consumer Spur	3/8"(91) – 6	**Homelite:** 190, Little Red, Super 2, Super 2cc, VI Super 2, XL, XL2, XL Mini
27999	22152		Consumer Spur	3/8"(91) – 6	**Echo:** CS-280e, CS-280ep, CS-290, CS-300 EVL **John Deere:** 25EV
28000	22152		Consumer Spur	3/8"(91) – 6	**Echo:** CS-302, CS-315, CS-330 EVL, CS-351 **John Deere:** 28, 30, 35, 35EV, 40V
28001	21940		Consumer Spur	3/8"(91) – 6	**Frontier:** F-35, FB-35 **Husqvarna:** 33, 34, 35, 37, 38 **Jonsered:** 36, 361, 365, 370 **Partner:** 22, 330, 350, 1612, 1613, 1614, 1616, Mini P, P2, P3, PA **Pioneer:** P-12 **Skil:** 310, 944, 1600, 1601, 1602, 1610, 1611, 1612, 1613, 1614, 1616, 1700, 1705, 1712
28004	35184		Consumer Spur	3/8"(91) – 6	**Dayton:** 4Z022, 4Z023, 4Z109 **Mastercraft:** 54-5659, 54-5661, 54-5662, 55-5663 **Poulan/Poulan Pro:** 180, 205, 225, 235, 1800, 2000, 2100, 2300, 2400, Micro 25 **Sears:** 35093, 35094, 35202, 35203, 35205 **Skil:** 1620, 1622, 1624, 1634 **Western Auto:** 012, 014, 110, 112, 214, 1800, 2000, 4010, S25DA
28005	28033		Consumer Spur	3/8"(91) – 6	**Remington:** Job Master, Mighty Mite 100-800, Outdoorsman, Yardmaster
28006	28031	BU 28031	Consumer Spur	3/8"(91) – 6	**Allis Chalmers:** 75 **Dayton:** 2Z970, 4Z573 **Poulan/Poulan Pro:** 25 Series (except Micro 25), S25 **Sears:** 35235, 35238, 35255, 35256 **Skil:** 1635, 1636 **Western Auto:** Wizard Models: 316, AV16
28016X	37511		Consumer Spur	3/8"(91) – 6	**Stihl:** 009, 010, 011, 020, 020T, MS 200 T, MS 201T, MS 201C-E
28094X	21276	DC 22148 NS 37986	Power Mate SD7	3/8" – 7	**Husqvarna:** 181, 185, 281, 285, 288, 298, 394, 394XP, 395, 395XP, 395XPG, 395XPW, 1100, 2100, 2101 **Jonsered:** 2095
28563X			Power Mate SD7	3/8" – 8	**Jonsered:** 820, 830, 910, 920, 930
29105	105761		Power Mate SM7	.325" – 7	**Husqvarna:** 42* (before April 1994), 133, 234, 238, 242 (before S/N 3441001)

W = Washer DC = Dust Cover NS = Neoprene Seal PD = Oil Pump Driver BU = Bushing RR = Retainer Ring

Oregon Part Number	Bearing	Additional Components	Sprocket Type	Pitch – Drive Teeth	Chainsaw Model
29175X	11893		Power Mate® SM7	.325" – 7	**Husqvarna:** 50, 51, 55, 55 Rancher, 154, 254 (before S/N 345-0001), 262 (before S/N 345-0001) **Jonsered:** 490, 590 **Partner:** P400, P500, P545, P5000, P5100 **Poulan/Poulan Pro:** 325
29313X	37507	W 27116	Power Mate SD7	3/8" – 7	**Echo:** CS-650, CS-660 **John Deere:** 65EV
29496X			Power Mate SM7	3/8" – 7	**Jonsered:** 450, 455, 510, 520, 525, 535, 2051, 2054, 2055
29888	21940	W 29394	Consumer Spur	3/8" (91) – 6	**Mastercraft:** 54-5720 (before April 1999), 54-5721 (before April 1999), 54-5722 (before April 1999) 54-5723 (before April 1999) **McCulloch:** 365, 2000, 2010, 2012, 2014, 2016, 2116, 2316, 2318, 3000, 3200, 3210, 3214, 3216, 3505, 3516, 3805, 3818, Mac 110-140, Mini Mac, MS1432, MS1435, MS1838, PM480, Power Mac 310-340, Pro Mac 3205AV-14, Titan 35-40 **Montgomery Ward:** TMY24062, TMY24064, TMY24066, TMY24068 **Sears:** 41554, 41556, 41558
29917X	37517	W 37246 PD 30395	Power Mate SM7	3/8" – 7	**Stihl:** 028, 028 Super
30384X	37517	W 37246 PD 30395	Power Mate SM7	.325" – 7	**Stihl:** 028, 028 Super
30672X	11807		Power Mate SD7	3/8" – 7	**Homelite:** 150 AO, 350, 350HG, 350SL (with 2-5/8"clutch with 5/8"-dia. shaft), EZ, EZ 250 AO, EZ Auto, SEZ AO, SXL Mini AO, VI 123, XL76 (without brake), XL 101, XL Mini AO
30681X	11807		Pro Spur®	3/8" – 7	**Homelite:** 450, 550, Super XL 925 (with 6-shoe clutch), Super XL Auto, VI 944, VI 955, XL (800-924 Series), XL-12 (after S/N 1735838), XL Auto **Remington:** PL-4, PL-5, PL-55, SL-11, Logger, Woodsman
32057	11999	DC 32204	Pro Spur	3/8" – 7	**Husqvarna:** 61 (after S/N 0510572), 266 (after S/N 0510000), 268 (after S/N 0510000), 272 (after S/N 0510000) **Jonsered:** 625 (after S/N 0510123), 630 (after S/N 0510000), 630 Super (after S/N 0510000), 630 West Coast (after S/N 0510000), 670 (after S/N 0510153)
32058	12733	NS 37986	Pro Spur	3/8" – 7	**Husqvarna:** 77, 160, 163, 180, 260, 263, 280, 380, 480, L-65
32060X	31153	W 17614	Pro Spur	3/8" – 7	**Stihl:** 030, 031, 032, 041 (after S/N 5664891)
32061X	37514	DC 35679	Pro Spur	3/8" – 7	**Stihl:** 038, 038 Super Magnum
32063X	25518		Pro Spur	3/8" – 7	**Stihl:** 045, 056S (before S/N 10963560)
32064X	37514		Pro Spur	3/8" – 7	**Stihl:** 048
32071	11999	DC 32204	Pro Spur	3/8" – 7	**Husqvarna:** 61 (after S/N 0510572), 266 (after S/N 0510000), 268 (after S/N 0510000), 272 (after S/N 0510000) **Jonsered:** 625 (after S/N 0510123), 630 (after S/N 0510000), 630 Super (after S/N 0510000), 630 West Coast (after S/N 0510000), 670 (after S/N 0510153)
32457X	37325		Power Mate SM7	.325" – 7	**Stihl:** 024, 026 (before S/N X25809074)
32669X	37825		Pro Spur	.404" – 7	**Stihl:** 070
32782X		W 10585	Pro Spur	3/8" – 7	**Echo:** CS-60, CS-60S
32786X	11893	W 18461	Pro Spur	3/8" – 7	**McCulloch:** 515, 605, 610, 650, 655, 700, 805, 850, 855, Mac 1-10 through 10-10, Pro Mac 55, Pro Mac 60, SP-70, Timber Bear **Mastercraft:** 54-5723 (before April 1999) **Montgomery Ward:** TMY24084, TMY24086
32794X	37507		Pro Spur	3/8" – 7	**Echo:** CS-451, CS-452, CS-500, CS-510 EVL, CS-550, CS-610 **John Deere:** 50V, 55EV, 55V, 7600, Green Machine **Redmax:** G561AVS, G621AVS **Sears:** 35826, 35829
33807X	37501 or 37504		Power Mate SM7	.325" – 7	**Jonsered:** 450, 455, 510, 520, 525, 535 (models 450-535 use bearing #37501); 2051, 2054, 2055 (models 2051-2055 use bearing # 37504)
34162X	37325		Power Mate SM7	3/8" – 7	**Stihl:** 029, 034, 034 Super, 036, 039, MS 290, MS310, MS 360, MS 390
34425X	11893		Power Mate SM7	3/8" – 7	**Husqvarna:** 50, 51, 55, 55 Rancher, 154, 254 (before S/N 345-0001), 262 (before S/N 345-0001) **Partner:** P400, P500, P545, P5000, P5100
34474X	31153		Power Mate SM7	.325" – 7	**Echo:** CS-4000, CS-4500, CS-4600, CS-5000, CS-5500
35460X	37504	W 37246	Power Mate SD7	.404" – 7	**Stihl:** 064, 066, 066 Magnum, MS 650, MS 660
35464X	37504	W 37246	Power Mate SD7	3/8" – 7	**Stihl:** 064, 066, MS 066 Magnum, MS 650, MS 660

W = Washer DC = Dust Cover NS = Neoprene Seal PD = Oil Pump Driver BU = Bushing RR = Retainer Ring

Sprockets – Application by Oregon® Number

Oregon Part Number	Bearing	Additional Components	Sprocket Type	Pitch – Drive Teeth	Chainsaw Model
35641X	11893	W 35651	Power Mate® SM7	.325" – 7	**Husqvarna:** 40, 45, 49 **Jonsered:** 410, 420, 425, 435, 2041, 2045, 2050 **Partner:** 400, 410, 450, 460, 490, 510
36868X	11893		Power Mate SD7	3/8" – 7	**Husqvarna:** 50, 51, 55, 55 Rancher, 154, 254 (before S/N 345-0001), 262 (before S/N 345-0001) **Jonsered:** 490, 590 **Partner:** P400, P500, P545, P5000, P5100
37969X	21276	DC 22148	Power Mate SD7	.404" – 7	**Husqvarna:** 3120XP, Jungle 3120
38071X	11893		Pro Spur®	.325" – 8	**Husqvarna:** 50, 51, 55, 55 Rancher, 154, 254 (before S/N 345-0001), 262XP (before S/N 345-1001) **Jonsered:** 490, 590 **Partner:** P400, P500, P545, P5000, P5100 **Poulan/Poulan Pro:** 325
38075X	16204	W 26984	Pro Spur	3/8" – 7	**Dolmar:** 112, 113, 114, 116, 116SI, 117, 119, 120, 120SI, 120 Super
38076X	37325	W 37246	Pro Spur	.325" – 7	**Stihl:** 024, 026 (before S/N X25809074)
38145X	37325		Pro Spur	3/8" – 7	**Stihl:** 029, 034, 034 Super, 036, 039, MS290, MS310, MS311, MS360, MS390, MS391
38470X	37504		Power Mate SD7	3/8" – 7	**Stihl:** 044, 046, MS361, MS362, MS440, MS441, MS460, MS 461
38471X	37504		Pro Spur	3/8" – 7	**Stihl:** 044, 046, MS361, MS362, MS440, MS441, MS460, MS 461
38824X	31153		Power Mate SM7	3/8" – 7	**Dolmar:** 109, 110, 111, 115 **Makita:** DCS 430, DCS 520i, DCS 4300, DCS 5200i
40068	105761		Power Mate SM7	.325" – 7	**Husqvarna:** 42, 242 (after S/N 3441001), 246
41569X	37325		Consumer Spur	3/8" (91) – 6	**Husqvarna:** 36, 41, 136, 137, 235E, 236, 240E **Jonsered:** 2035, 2036, 2040, CS2137, CS2234, CS2238 **Partner:** 365, 405 **Poulan/Poulan Pro:** 295, 2500, 2600, 2750, 2775, 2900, 3050, P600
41725X	37325		Pro Spur	.325" – 7	**Husqvarna:** 36, 41, 136, 137, 235E, 236, 240E **Jonsered:** 2035, 2036, 2040, CS2137 **Partner:** 365, 405 **Poulan/Poulan Pro:** 255, 295, 2500, 2600, 2750, 2775, 2900, 3050, 4620AV, 4620AVX, P600
41726X	37325		Power Mate SM7	.325" – 7	**Husqvarna:** 36, 41, 136, 137, 235E, 236, 240E **Jonsered:** 2035, 2036, 2040, CS2137 **Partner:** 365, 405 **Poulan/Poulan Pro:** 295, 2500, 2600, 2750, 2775, 2900, 3050, 4620AV, 4620AVX, P600
68209X	11893	W 11513	Power Mate SD7	3/8" – 7	**Mastercraft:** 54-5723 (before April 1999) **McCulloch:** 515, 605, 610, 650, 655, 700, 805, 850, 855, Mac 1-10 thru 10-10, Pro Mac 55, Pro Mac 60, SP-70, Timber Bear **Montgomery Ward:** TMY24084, TMY24086
100757	11893		Power Mate SD7	3/8" – 7	**Husqvarna:** 254 (after S/N 345-0001), 257 (after S/N 314-0001), 262XP (after S/N 345-0001) **John Deere:** CS56, CS62 **Olympyk:** (Oleo Mac) 956, 962
100758X	11893	PD 103072	Power Mate SM7	.325" – 7	**Efco:** 156, 165 **Husqvarna:** 254 (after S/N 345-0001), 257(after S/N 314-0001), 262XP (after S/N 345-0001) **John Deere:** CS56, CS62 **Olympyk:** (Oleo Mac) 956, 962
100791X	37325	RR 30398	Power Mate SM7	.325" – 7	**Stihl:** 024, 026 (after S/N X25809074), MS 260, MS 260 Pro, MS 270, MS 270C
100876X	37325	W 37246	Pro Spur	.325" – 7	**Stihl:** 024, 026 (after S/N X25809074), MS 260, MS260 Pro MS, 270, MS 270C
100961X	37325		Power Mate SM7	.325" – 7	**Stihl:** 025, MS 210, MS 250, MS 250C
100962X	37325		Consumer Spur	3/8" (91) – 6	**Stihl:** 017, 018, 019, 019T, 021, 023, 025, MS 170, MS 171, MS 180C, MS 181, MS 181C, MS 210, MS 211, MS 211C, MS 230, MS 250, MS 250C
102469	11999	W 26908 DC 25047	Power Mate SD7	3/8" – 7	**Husqvarna:** 61 (before S/N 0510572), 66, 162, 266, (before S/N 0510000), 268 (before S/N 0510000), 272 (before S/N 0510000) **Jonsered:** 625 (before S/N 0510123), 630 (before S/N 0510000), 630 Super (before S/N 0510000), 630 West Coast (before S/N 0510000), 670 (before S/N 0510153)
104102X	21539		Consumer Spur	3/8" (91) – 6	**Alpina:** P-34
104440X	37325		Consumer Spur	3/8" (91) – 6	**Olympyk:** 931 **Redmax:** G300T, G300TS, G3100TS, G300AV/AVS

W = Washer DC = Dust Cover NS = Neoprene Seal PD = Oil Pump Driver BU = Bushing RR = Retainer Ring

Oregon Part Number	Bearing	Additional Components	Sprocket Type	Pitch – Drive Teeth	Chainsaw Model
105772X	37501		Power Mate® SD7	3/8" – 7	**Husqvarna:** 362, 365, 371, 372
106068X	31153		Consumer Spur	.325" – 7	**Olympyk:** 938, 941, 942, 945, 946, 951
106114	37325		Consumer Spur	3/8" (91) – 6	**Partner:** 351 **Poulan:** 210, 221, 230, 260, 1950, 2050, 2055, 2075, 2150, 2155, 2175, 2250, 2375, 2450, 2550, Patriot 1900, Wildthing **Sears:** 351062, 351142, 351161, 351181, 352161, 352180 **Snapper:** S1634, S1838
106593X	37501		Power Mate SD7	3/8" – 7	**Husqvarna:** 362, 365, 371, 372, 372XP, 570, 575XP, 576XP **Jonsered:** 2065, 2071, CS2165, CS2166, CS2171, CS2172
106656X	37325		Consumer Spur	.325" – 7	**Husqvarna:** 36, 41, 136, 137, 235E, 236, 240E **Jonsered:** 2035, 2036, 2040, CS2137 **Poulan:** 295, 2500, 2600, 2750, 2775, 2900, 3050, 4620, 4620AV, 4620AVX, P600 **Partner:** 365, 405
106657X	37325		Consumer Spur	.325" – 7	**Stihl:** 017, 018, 019, 021, 023, 025, MS 210, MS 230, MS 250, MS 250C
106658X	11893	W 35651	Consumer Spur	.325" – 7	**Husqvarna:** 40, 45, 49 **Jonsered:** 410, 420, 425, 435, 2041, 2045, 2050
106906X	37511		Consumer Spur	3/8" (91) – 6	**Echo:** CS-300, CS-301, CS-303T, CS-305, CS-306, CS-330MX4, CS-330T, CS-340, CS-341, CS-345, CS-346, CS-355T, CS-360T, CS-361P, CS-3000, CS-3350, CS-3400, CS-3450
107504X	11893		Consumer Spur	.325" – 7	**Poulan:** 285, 305, 330, 335, 336, 2700, 2800, 3000, 3300 **Sears:** 251200
108215X	11893		Power Mate SM7	.325" – 7	**Husqvarna:** 346, 346XP, 346XPG, 351, 353, 353E-Tech, 355, 355EPA, 357, 357EPA, 357XP, 359, 359EPA, 445, 445e, 450, 450e, 450 Rancher **Jonsered:** CS2141, CS2145, CS2149, CS2150, CS2152, CS2153, CS2156, CS2159, CS2245, CS2250, CS2250s
108308X	11893		Pro Spur®	.325" – 7	**Husqvarna:** 340, 340e, 345, 345e, 351, 355, 355EPA, 445, 445e, 450, 450e, 450 Rancher **Jonsered:** CS2141, CS2145, CS2150, CS2152, CS2153, CS2245, CS2250, CS2250s
108565X	11893		Power Mate SD7	3/8" – 7	**Husqvarna:** 355, 355EPA, 357, 357EPA, 357XP, 359, 359EPA **Jonsered:** CS2156, CS2159
108567	108817		Consumer Spur	3/8" (91) – 6	**Homelite:** 20, 23, 27, PS-33, 2500, 2700, 3300, 3350, 3800, 3816, 3850, i3850b, i4150b, i4550b, Timberman, UT10901, UT10910, UT10926
108818X	37825		Power Mate SD7	.404" – 7	**Stihl:** 070
111177X	31153		Power Mate SM7	.325" – 7	**John Deere:** CS46, CS52 **Olympyk:** (Oleo-Mac) 938, 941, 942, 945, 946, 951
111178X	31153		Power Mate SM7	.325" – 7	**Cub Cadet:** CS5018, CS5220 **Efco:** 152, MT 5200 **Olympyk:** (Oleo-Mac) 947, 952
111185X	37507		Pro Spur	.325" – 7	**Alpina:** 400, 450, 500
111435X	37511		Pro Spur	.325" – 7	**Solo:** 639, 644, 651, 651SP
111450X	16204		Power Mate SD7	3/8" – 7	**Dolmar:** PS6000i, PS6800i **Makita:** DCS6000i, DCS6800i
111590X	37501		Power Mate SD7	3/8" – 7	**Husqvarna:** 385XP, 385XPG, 390XP, 390XPW **Jonsered:** CS2188
112130	22152		Consumer Spur	3/8" (91) – 6	**Dolmar:** PS-34, PS-45 **Makita:** DCS-34
112135	21940		Consumer Spur	3/8" (91) – 6	**Dolmar:** PS-340, PS-341 **Makita:** DCS-340, DCS-341
508038X	37325		Consumer Spur	3/8" (91) – 6	**Tanaka:** ECS-3500
509604X	37514	DC 35679	Power Mate SD7	3/8" – 7	**Stihl:** 038, 038 Super Magnum
513442	37509		Power Mate SM7	.325" – 7	**Echo:** CS-400 EVL, CS-440 EVL, CS-3600, CS-3900, CS-4400, CS-5100 (after S/N 134504) **John Deere:** 45
513444	37509		Pro Spur	.325" – 7	**Echo:** CS-400 EVL, CS-440 EVL, CS-3600, CS-3900, CS-4400, CS-5100 (after S/N 134504) **John Deere:** 45
513445	37325		Pro Spur	.325" – 7	**Husqvarna:** 141, 142

W = Washer DC = Dust Cover NS = Neoprene Seal PD = Oil Pump Driver BU = Bushing RR = Retainer Ring

Sprockets – Application by Oregon® Number

Oregon Part Number	Bearing	Additional Components	Sprocket Type	Pitch – Drive Teeth	Chainsaw Model
513446	37325		Consumer Spur	3/8" (91) – 6	**Husqvarna:** 141, 142
513447	37325		Power Mate® SM7	.325" – 7	**Husqvarna:** 141, 142
513470X	11893		Power Mate SM7	3/8" – 7	**Husqvarna:** 455, 455 Rancher, 460, 460 Rancher
513471X	11893		Pro Spur®	.325" – 7	**Husqvarna:** 455, 455 Rancher, 460, 460 Rancher
513472X	11893		Power Mate SM7	.325" – 7	**Husqvarna:** 455, 455 Rancher, 460, 460 Rancher
514678	108817		Consumer Spur	3/8" (91) – 6	**Poulan:** 3314, 3416, 3816, 4018, 4018WT, 4218 **Sears:** 35190
522963X	21940		Consumer Spur	3/8" (91) – 6	**Husqvarna:** 334T, 335, 335XP, 336, 338, 338XPT, 339, 339XP
523524X	37511		Consumer Spur	3/8" (91) – 6	**Echo:** CS-370, CS-400
524076	37325		Consumer Spur	.325" – 7	**Homelite:** 20, 23, 27, 2500, 2700, 3300, 3350, 3800, 3816, 3850, 4550, i3850b, i4150b, i4550b, PS-33, Timberman, UT10901, UT10910, UT10926
544531			Consumer Spur	1/4" – 8	**Husqvarna:** 33, 34, 35, 37, 38
544554	22152		Consumer Spur	1/4" – 8	**Echo:** CS-302, CS-315, CS-330EVL, CS-351
544555	22152		Consumer Spur	1/4" – 8	**Echo:** CS-280e, CS-280ep, CS-290, CS-300EVL
544658X			Power Mate SM7	1/4" – 9	**Stihl:** 017, 018, 019, 019T, 021, 023, 025, MS 170, MS 171, MS 180C, MS 181, MS 181C, MS 210, MS 211, MS 211C, MS 230, MS 250, MS 250C
544675X			Consumer Spur	1/4" – 8	**Echo:** CS-300, CS-301, CS-303T, CS-305, CS-306, CS-330MX4, CS-330T, CS-340, CS-341, CS-345, CS-346, CS-355T, CS-360T, CS-361P, CS-3000, CS-3350, CS-3400, CS-3450
544676X	37325		Consumer Spur	1/4" – 8	**Stihl:** 017, 018, 019, 019T, 021, 023, 025, MS 170, MS 171, MS 180C, MS 181, MS 181C, MS 210C MS 210, MS 211, MS 211C, MS 230, MS 250, MS 250C
544677X			Consumer Spur	1/4" – 8	**Stihl:** 009, 010, 011
544678X	37511		Consumer Spur	1/4" – 8	**Husqvarna:** 334T, 335, 335XPT, 336, 338XPT, 339XP
544679X	37507		Power Mate SM7	1/4" – 9	**Echo:** CS-300, CS-301, CS-303T, CS-305, CS-306, CS-330MX4, CS-330T, CS-340, CS-341, CS-345, CS-346, CS-355T, CS-360T, CS-361P, CS-3000, CS-3350, CS-3400, CS-3450
544680X			Power Mate SM7	1/4" – 9	**Husqvarna:** 33, 34, 35, 37, 38
544689X			Power Mate SM7	1/4" – 9	**Stihl:** 009, 010, 011
546622			Consumer Spur	3/8" – 6	**Oregon:** CS250-S6, CS250-E6, CS250-A6, CS300, CS300-A6, CS300-E6
552412	37325		Power Mate SM7	1/4" – 9	**Husqvarna:** 36, 41, 136, 137, 141, 235E, 240E **Poulan:** P600
552665	37325		Consumer Spur	1/4" – 8	**Husqvarna:** 36, 41, 136, 137, 141, 235E, 236, 240E **Poulan:** P600
553995	31153		Consumer Spur	3/8" (91) – 6	**Husqvarna:** 435, 435E, 440, 440E
554045X	37511		Consumer Spur	1/4" – 8	**Stihl:** MS200T, MS 201T, MS 201C-E
570964			Consumer Spur	3/8" (91) – 6	**Oregon:** CS1500
571043			Consumer Spur	3/8" (90) – 7	**Oregon:** PS250
577331	31153		Pro Spur	.325" – 7	**Husqvarna:** 435, 435E, 440, 440E **Jonsered:** CS2240, CS2240s
582642	31153		Power Mate SM7	.325" – 7	**Husqvarna:** 435, 435E, 440, 440E **Jonsered:** CS2240, CS2240s

W = Washer DC = Dust Cover NS = Neoprene Seal PD = Oil Pump Driver BU = Bushing RR = Retainer Ring

Rim & Spur Sprocket Troubleshooting Guide

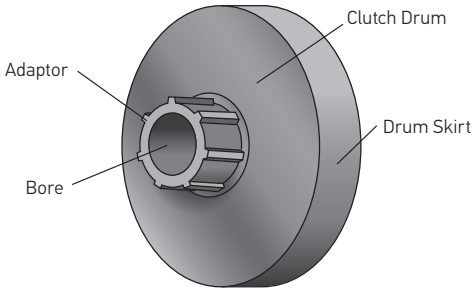

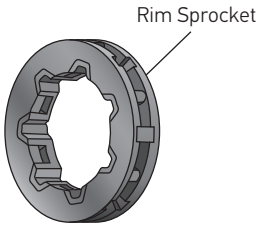

Power Mate® Sprocket
(front view)

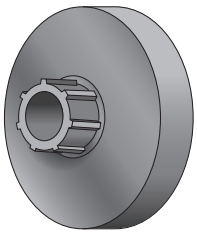

Power Mate Sprocket
(inside view)

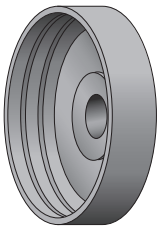

Oregon® Rim

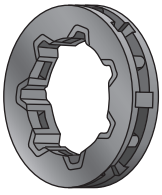

Power Mate Rim Sprocket System

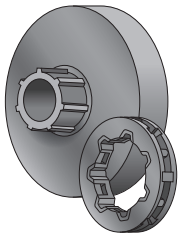

Spur Sprocket

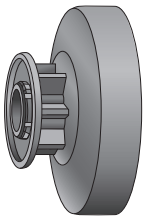

Basic Sprocket Maintenance

Rims and Spur Sprocket
Visually inspect daily

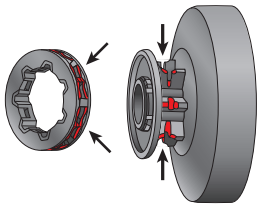

Power Mate Sprockets
Visually inspect daily and before use

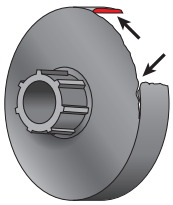

Bar and Chain Oil
Fill before use and when reservoir is empty

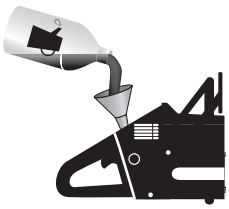

Sprocket Grease
Apply grease to sprocket once a week

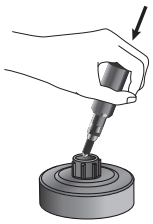

Typical Drum Stress

Broken/cracked skirt

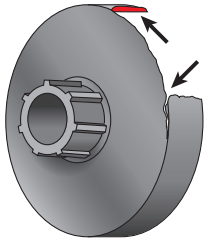

Cracked oil pump lug

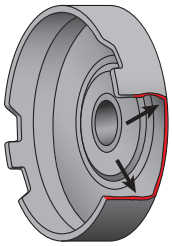

Worn inner diameter

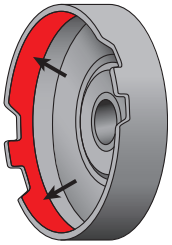

Worn clutch, worn inner diameter

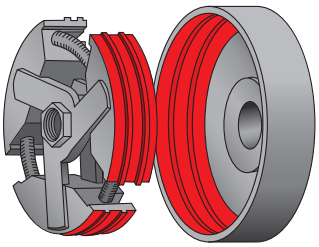

Result
Check daily for cracks, splits, or excessive wear in the sprocket clutch drum

Solution
If the drum is cracked, split, or broken, as shown, replace the drum immediately with a new one.

Sprockets — Troubleshooting

Rim & Spur Sprocket Troubleshooting Guide

Spur Sprocket Damage

Cause
This condition can occur when cutting chain drive links wear through the case-hardened teeth

Result
Cutting chain can be ruined by damaged spurs

Solution
If spur sprocket teeth look like this replace immediately

Rim Damage

Cause
Wear can occur under normal conditions. However, check for excessive rim wear and look for wear on outer diameter

Result
The reduction in diameter can also allow chain drive links to damage the sprocket adaptor

Solution
Replace rim after two chains

Severe Rim Damage

Solution
Do not fit cutting chain to rims that are severely worn. Serious chain damage will result and the rim may break

Worn Spur

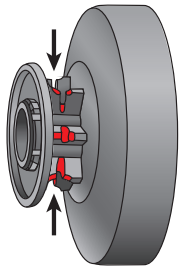

Outer Wear

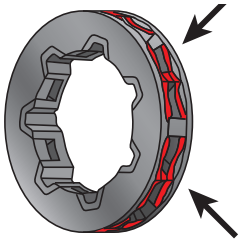

Broken Rim

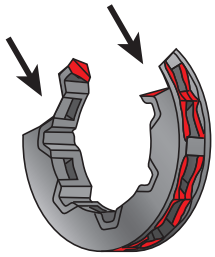

Chain Brake Stress

Skirt Wear/Brake Band

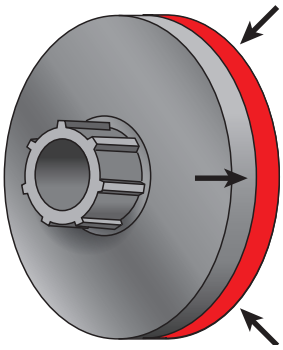

Wear/Adaptor Damage

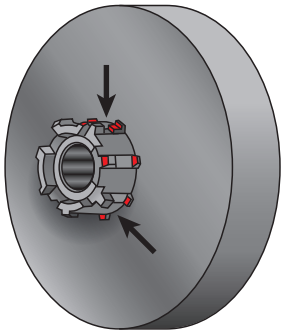

Worn Rim and Adaptor Spline

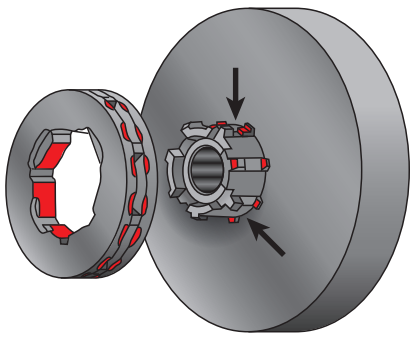

Result
An overly tightened strap around the drum will cause the strap to rub against the clutch drum which will overheat and soften the metal causing potential drum failure

Solution
If your chainsaw has a chain brake, always check the brake to make sure it stops the rotating chain when activated. Make certain that the brake strap around the drum is not too tight

CHAINSAW PARTS

Screnches . . . . . FOR 214

Air Filters . . . . . FOR 215–219

Electrical Parts . . . . . FOR 219–221

Fasteners . . . . . FOR 221

Chain Adjusters . . . . . FOR 221–222

Grinding Wheels. . . . . FOR 223

Fuel Line, Primer Bulbs and

Fuel Filters. . . . . FOR 223–228

Starter Pulleys and Springs. . . . . FOR 228

Chainsaw Parts

Screnches

	Driver Type:	⊖	⊖	⊖	⊖	⊖	⊖	✱	⊖	⊖	⊖	⊖
Dimensions (mm)	S1 x S2	13 x 19	13 x 19	13 x 19	19 x 10	16 x 13	19 x 17	19	19 x 14	21 x 17	15 x 19	16 x 11
	A1	25	21	33	35	35	27	12	35	30	28	40
	L2	175	177	171	172	172	177	177	175	172	177	177
	L1	52	44	68	70	72	57	51	70	60	56	80
	Oregon® No's:	57-005	57-017	57-016	57-003	57-002	57-008	57-019	57-006	57-010	57-014	57-001
	Dolmar		✓				✓					
	Echo		✓	✓	✓				✓			
	Homelite											✓
	Husqvarna	✓	✓	✓		✓						
	John Deere			✓	✓	✓			✓			
	Jonsered	✓	✓			✓					✓	
	McCulloch	✓										✓
	Efco / Oleo-Mac			✓	✓		✓					
	Partner	✓	✓			✓						
	Pioneer								✓			
	Poulan		✓						✓		✓	
	Shindaiwa	✓	✓		✓							
	Stihl		✓	✓			✓	✓		✓		

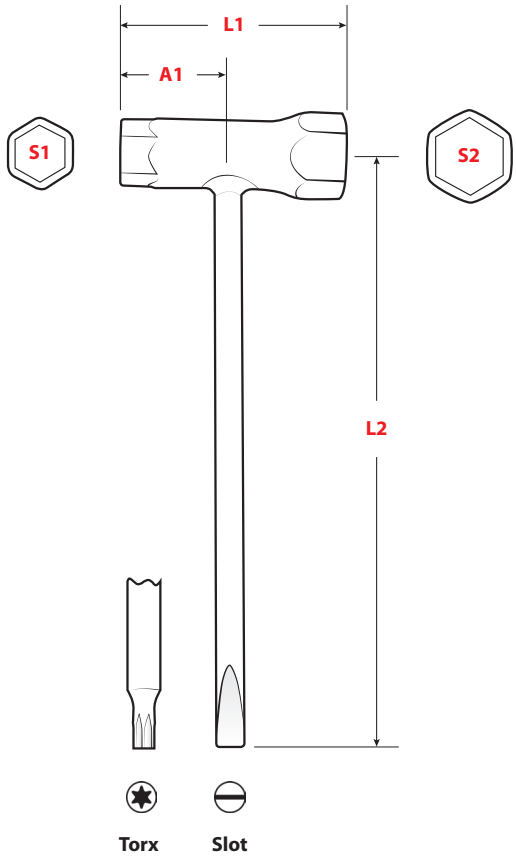

OREGON	Replaces	Description

Air Filters

30-618	Echo 130310-39730	**Air Filter** - NEW Fits Echo CS3500, CS4200, & CS420 Height: 2-1/4", outer diameter: 2-1/2", inner diameter: 1-3/4"	
30-621	Echo A226-000291	**Air Filter** - NEW Echo CS350TES	
30-625	Echo 13031038331	**Air Filter** - NEW Fits Echo CS440, CS4400, CS450, CS510, CS520, & CS530 Height: 1-3/8", outer diameter: 2-1/2", inner diameter: 1-3/4"	
30-620	Echo P021-016371	**Air Filter** - NEW Fits Echo CS600	
30-619	Echo A226-000070	**Air Filter** - NEW Fits Echo CS6702 & CS680S	
55-207	Homelite A65178	**Air Filter – Felt** For chainsaws Fits EZ-Automatic Length: 4", width: 2-7/8"	
55-211	Homelite 63589-A	**Air Filter** For chainsaws Fits model SXL, XL12, XL15, XL400, XL500, & UT10618A Length: 4", width: 3-1/2"	
55-610	Homelite 69141 Homelite D92702B Homelite A24779	**Foam Air Filter** Fits models Super 2, XL2, XL, CSB3012, & LX30 Bandit Diameter: 1-7/8", thickness: 1/2" Pre-oiled foam air filter - (Previously 55-228)	
30-124	Husqvarna 503 44 72-03	**Air Filter** Fits 261, 262, 268, 272, & 394 chainsaws	
30-148	Husqvarna 501 80 71-05	**Air Filter** Fits 61, 66, 266, 281, & 288 chainsaws	

Chainsaw Parts

OREGON	Replaces	Description

Air Filters

30-622	Husqvarna 505126306	**Air Filter** - NEW Fits Husqvarna 555, 560XP, CS2258, & CS2260 Length: 3", width: 2-1/2", height: 1-3/8"	
30-623	Husqvarna 522675003	**Air Filter** - NEW Fits Husqvarna 562XP Length: 3-1/8", width: 2-9/16", height: 2-1/2"	
30-634	Husqvarna 544 08 08-02	**Air Filter** - NEW Fits Husqvarna 445, 445E, 450, & 450E chainsaw	
30-631	Husqvarna 544181602	**Air Filter** - NEW Fits Husqvarna K750 Length: 5", width: 4-1/2", height: 1-3/8"	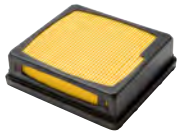
30-627	Husqvarna 544181602	**Air Filter** - NEW Fits Husqvarna K760 Length: 4-7/8", width: 4-1/2", height: 2-1/2"	
30-645	Husqvarna, 503 81 45-01	**Air Filter** - NEW Fits Husqvarna 362, 362EPA, 362 Special, 362XP, 365, 365EPA, 365 Special, 365 Special EPA, 371, 371EPA, 372, 372EPA, & 372XPW chainsaws	
30-641	Husqvarna 530029811	**Air Filter** - NEW Fits Husqvarna 36, 41, 136, 137, 141, & 142 chainsaws Length: 3-1/8", width: 2-11/16", height: 7/8"	
30-630	Husqvarna 575269103	**Air Filter** - NEW Fits Husqvarna 362, 365, 371, & 372 Length: 3-1/2", width: 2-7/8"	
30-637	Husqvarna 501 80 71-05	**Air Filter** - NEW Fits Husqvarna 61, 181, 266, 281, & 288	
30-633	Husqvarna 537024003	**Air Filter** - NEW Fits Husqvarna 340, 345, 346 XP, 350, 351, & 353 chainsaws	

OREGON	Replaces	Description

Air Filters

30-648	Husqvarna 503 89 82-01	**Air Filter** - NEW Fits Husqvarna 51/55 Length: 4", width: 3-1/2", height: 2"	
55-218	McCulloch 214224 McCulloch 61460 McCulloch 216905	**Air Filter** For chainsaws Fits 110, 120, 130, & Eager Beaver Diameter: 2", thickness: 7/8"	
55-212	McCulloch 69922 McCulloch 92420	**Air Filter** For chainsaws Fits 10-10 Length: 4-3/8", width: 4-1/4"	
55-214	McCulloch 95213 McCulloch 214226	**Air Filter** For chainsaws Fits 600 & Eager Beaver 3.7 Length: 4-3/8", width: 4-1/4"	
55-226	Poulan 24548	**Air Filter** For chainsaws Fits 3400 & 3700 Length: 3-7/8", width: 2-5/8", height: 1"	
55-515	Poulan 530-37793	**Foam Air Filter** Fits gas chainsaw models 1950, 2050, 2075, 210, 2150, 2175, 2250, 230, 2450, 2550, & 260 Pre-oiled air filter	
55-612	Pouan 23369	**Foam Air Filter** For chainsaws Fits model 25 Length: 3-3/8", width: 1-5/8", height: 1-1/4" Pre-oiled foam - (previously 55-223)	
55-613	Poulan 23791	**Foam Air Filter** For chainsaws Fits model MICRO XXV, 18, 20, & 2300 Length: 2-5/8", width: 1-1/2", height: 1" Pre-oiled foam – (previously 55-224)	
30-636	Stihl 1127 120 1621	**Air Filter** - NEW Fits Stihl 029, 039, MS290, & MS310 Length: 4-5/8", width: 1-1/2", height: 2-5/8"	

Chainsaw Parts

OREGON	Replaces	Description	

Air Filters

30-642	Stihl 1123 120 1612	**Air Filter** - NEW Fits Stihl MS210, MS230, & MS250	
30-639	Stihl 1125 120 1626	**Air Filter** - NEW Fits Stihl 034, 036, MS340, & MS360	
30-646	Stihl 1119-120-1610	**Air Filter** - NEW Fits Stihl 038, C44-50, & MS380	
30-632	Stihl 1135 120 1600	**Air Filter** - NEW Fits Stihl MS341 & MS361 Length: 4-5/8", width: 2-13/16", height: 1-11/16"	
30-628	Stihl 4224-141-0300	**Air Filter** - NEW Stihl TS700 & TS800 Length: 5-1/2"	
30-653	Stihl 0000-141-0300	**Pre-Air Filter, Heavy Duty** - NEW Fits Stihl 044, 046, 064, 066, 084, 088, MS440, MS441, MS460, MS640, MS650, MS660, MS780, & MS880	
30-215	Stihl 1118 120 1611	**Air Filter** - NEW Fits Stihl most 028 Length: 3-5/8", width: 2-11/32", height: 13/16"	
30-216	Stihl 1139 120 1601	**Air Filter** - NEW Fits MS 211, MS 211 C, MS 181, & MS 181 C	
30-218	Stihl 1123 120 1612	**Air Filter** - NEW Fits MS 250, MS 250 C, 021, 023, 025, P 835, P 840, MS 210, MS 210 C, MS 230, & MS 230 C	
30-220	Stihl 1140 140 4401	**Air Filter** - NEW Fits MS 201 T chainsaws Length: 4-7/16", width: 3", height: 3/4"	
30-223	Stihl 4148 141 0300	**Air Filter, Paper** - NEW Fits FS 240 C, FS 240 RC, FS 260 C, FS 260 RC, FS 360 C, FS 410 C, FS 460 C, FS 460 RC	

OREGON	Replaces	Description	

Air Filters

30-853	Stihl 0000-120-1654	**Air Filter** Fits models 044, MS440, 066, MS660, 084, & 088 Length: 5", width: 4-1/8", height: 1-3/4" 3-piece kit	
30-154	Stihl 1110-120-1601	**Air Filter** For model 041	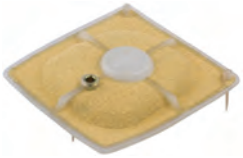
30-155	Stihl 1120-120-1600	**Air Filter** For models 009, 010, & 011	
55-236	Stihl 1118-120-1611	**Air Filter** Fits 028 chainsaw Length: 3-1/2", width: 2-1/4", height: 3/4"	
30-337	Stihl 1121-120-1617	**Air Filter** Fits models 024, 026, MS240, & MS260	
30-156	Stihl 1130-124-0800	**Air Filter** For models 017, 018, MS170, & MS180	

Electrical

55-111	Stihl 1121-430-0200	**Stop Switch** For models 024, 026, 070, TS08, & TS350	
33-206	Universal	**Toggle Switch** 2 terminal ends	
33-207	Universal	**Toggle Switch** 1 terminal end	
33-180	Husqvarna 503 717 901	**Stop Switch** Fits many Husqvarna chainsaw models	

Chainsaw Parts

Electrical

33-158	Husqvarna 503718201	**On/Off Switch** For chian saw models 232L, 232R, 235FR, 235R, 324LDX, 324LX, 324RX, 326, 336, 339XPT, & 385	
33-053	Universal	**Ignition Module** Fits most 2-cycle and 4-cycle engines Used to replace points and condenser	
33-254	Husqvarna 544018401 Husqvarna 503901401	**Ignition Coil** Fits chian saw models 51, 55, & 55 Rancher (2000–2007)	
33-244	Stihl 0000-400-1300	**Ignition Coil** Fits chainsaw models 024, 026, 028, 034, 036, 044, 046, & 048	
33-243	Stihl 0000-400-1306 Stihl 0000-400-1302	**Ignition Coil** Fits chainsaw models 021, 023, & 025, and trimmer models FS 160, FS 180, & FS 220	
33-245	Stihl 1122-400-1314	**Ignition Coil** Fits chainsaw models 046, 066, MS460, MS650, & MS660	
36-425	Echo 159012-03433	**Spark Plug Boot** - NEW Echo CS302, CS4600, PB230, PB250, PB500, SRM230, SRM260, SRM280, SRM310, SRM2000, SRM2500, SRM3000, & SRM4600	
36-424	Echo 159012-01620	**Spark Plug Boot** - NEW Echo CS280, CS300, CS3000, PB200, PB400, PB1000, PB2400, SRM200, SRM340, SRM1500, SRM2100, SRM2400, & SRM3100	
33-208	Homelite A55373-A	**Spark Plug Boot** 5 mm for trimmers and chainsaws Protects plug from moisture Eliminates shock Positive connection	
33-204	Husqvarna 501-485-402	**Spark Plug Boot** 90 degree for chainsaw models 340, 345, 346, 350, & 351 Protects plug from moisture Eliminates shock Positive connection.	

OREGON	Replaces	Description	

Electrical

36-427	Makita 957-604-240	**Spark Plug Boot** - NEW Fits Makita DPC6200, DPC6201, DPC6400, DPC6401, DPC6410, DPC6411, DPC7001, DPC7300, DPC7301, DPC7310, DPC7311, DPC7321, DPC8112, DPC9500, DPC9501, DCS6401, DCS642120, DCS7301, & DCS7901	
33-210	Universal	**Spark Plug Boot** Fits most spark plugs Protects plug from moisture Eliminates shock Positive connection	

Fasteners

04-008	Husqvarna 5032200-01	**Bar Stud Nut** 8 mm	
04-007	McCulloch 110676	**Bar Stud Nut** Fits Mini Mac 600 1/4-28	
04-006-0	McCulloch 120029	**Bar Stud Nut** Fits Mini Mac 300 M6.3 x 1	
04-009	Stihl 000-955-0801	**Bar Stud Nut** Fits 028A, 031AV, 032AV, 034AV, 041AV, 042AV, & 045AV 8 mm x 1.25	

Chain Adjusters

56-004	Echo 43301611031 Echo 43301402830 John Deere PT6683	**Chain Adjuster, Includes Pin** Fits models 440, 500, 510, 550, 610, 600, 650, & 750	
56-022	Husqvarna 537-0404-21	**Chain Adjuster Kit** Fits models 362XP, 365, 372, 385, 570, 575, & 576	
02-137	Husqvarna 501452702	**Chain Adjuster** - NEW Fits most 42, 44, 55, 55, Rancher, 133, 234, 238, 242, 340, 345, & 350 chainsaws	
02-138	Husqvarna 501537101	**Chain Adjuster** - NEW Fits most 61, 66, 181, 266, 268, 268 Special, 272 XP, 281, & 288 chainsaws	

OREGON	Replaces	Description	

Chain Adjusters

02-139	Husqvarna 537 07 12-01	**Chain Adjuster** - NEW Fits Husqvarna 345, 346, 350, 350, 353, 357, & 359	
02-136	Husqvarna 530 01 58-26	**Bar Adjuster Pin** - NEW Fits Husqvarna 141	
56-002	McCulloch 84929 McCulloch 90658 McCulloch 68656	**Chain Adjuster with Bolt** Fits Mini Mac 100 & 300 series	
56-003	McCulloch 102115 McCulloch 91982 McCulloch 110590	**Chain Adjuster with Bolt** Fits 600 series	
56-001	Homelite A00440 Homelite 69254-1A Homelite 110590	**Chain Adjuster with Bolt** Fits XL, XL2, Super 2, 240, & 245	
56-011	Stihl 1118-664-1600 Stihl 1120-664-1500	**Chain Adjuster with Bolt** Fits models 009 & 028	
56-008	Stihl 1110-664-1600 Stihl 1110-664-1500	**Chain Adjuster with Bolt** Fits models 030, 031, 031AV, 031AVS, 032, 041A, 042, 042AV, 045, 045AV, & 045AV super	
56-025	Stihl 1106-664-1501 Stihl 0000-951-2911	**Chain Adjuster Kit** Fits models 050, 051, 070, 075, 076, 08S, & 090	
56-023	Stihl 1125-007-1021	**Chain Adjuster Kit** Fits models MS360, MS380, & MS600	
56-024	Stihl 1123-640-1900 Stihl 1123-664-1400	**Chain Adjuster Kit** Fits models MS230 & MS250	

OREGON Replaces Description

Grinding Wheels

High-quality, vitrified grinding wheels designed specifically for Oregon® chain and grinders. Resists burning the cutters and leaves a precision finish. Wheels will also fit Efco chain grinders.

OREGON	Thickness	ID	OD	Chain Size
OR534-18 (was 57-430)	1/8"	7/8"	5-3/4"	1/4", .325", 3/8" LP
OR534-316 (was 57-431)	3/16"	7/8"	5-3/4"	3/8" std., .404"

Tygon® Fuel Line

OREGON	I.D.	O.D.	Length
Compliant with EPA & CARB regulations; E10 compatible			
07-450	1/4"	3/8"	50'
07-458	5/16"	7/16"	50'
Compliant with EPA & CARB Regulations: E85 compatible, sold in bags of 10 pieces; priced per piece			
07-551	1/8"	1/4"	1'
07-552	3/16"	5/16"	1'
07-553	3/32"	3/16"	1'
07-555	0.080"	0.140"	1'
Non-Compliant with EPA & CARB Regulations; E10 compatible			
07-153	3/32"	3/16"	50'
07-157	1/8"	3/16"	25'
07-151	1/8"	1/4"	50'
07-152	3/16"	5/16"	50'
07-150	1/4"	3/8"	50'
07-154	1/16"	1/8"	50'
07-155	0.080"	0.140"	50'
07-156	0.117"	0.211"	25'
07-158	5/16"	7/16"	50'

Tygon fuel lines, Oregon fuel lines and primer bulbs are compatible with up to 10% Ethanol blend fuels unless otherwise stated. Using Ethanol blends higher than 10% may speed deterioration and cause leakage.

OREGON Replaces Description

Oregon® Fuel Line

- Oregon Fuel Line is a specially formulated gas and oil vinyl tubing — made for use with lawnmowers, chainsaws, and snowmobiles
- Maintains air tight seal on fittings — even in extreme temperatures
- Translucent material resists swelling or hardening
- Compare to Tygon®

OREGON	ID	OD	Length
Non-Compliant with EPA and CARB regulations — E40 Compatiable			
07-254	1/16" (.062")	1/8" (.125")	25'
07-262	1/16" (.062")	1/8" (.125")	12-1/2'
07-263	.080"	.140"	12-1/2'
07-255	.080"	.140"	25'
07-253	3/32" (.093")	3/16" (.187")	50'
07-261	3/32" (.093")	3/16" (.187")	25'
07-264	.117"	.211"	12-1/2'
07-266	3/32" (.093")	13/64" (.203")	25'
07-256	.117"	.211"	25'
07-265	1/8" (.125")	3/16" (.187")	12-1/2'
07-257	1/8" (.125")	3/16" (.187")	25'
07-259	1/8" (.125")	1/4" (.250")	25'
07-251	1/8" (.125")	1/4" (.250")	50'
07-260	3/16" (.187")	5/16" (.312")	25'
07-252	3/16" (.187")	5/16" (.312")	50'
07-258	1/4" (.250")	3/8" (.375")	25'

Fuel Line & Primer Bulbs

07-008 Homelite 63744A
Fuel Line – Molded
Fits XL-12 & Super XL-12
Length: 9"

07-071 Husqvarna 501 28 59-01
Fuel Line
Fits chian saws and trimmers 140, 162, 266, 36, & 61

36-419 Husqvarna 501-51-99-01
Oil Line - NEW
Husqvarna 61, 266, 268

07-009 McCulloch 215708
McCulloch 301011
Fuel Line
Fits McCulloch 1010 series
Length: 6-5/16", ID: 3/16"

OREGON	Replaces	Description

Fuel Line & Primer Bulbs

07-011	Shindaiwa 20011-8545 Shindaiwa 20011-85459	**Fuel Tube** Fits models T25, T27, C35, & B45	
07-007	Stihl 1119-358-7700	**Fuel Line** Fits 038 chainsaw Length: 4-15/16"	
07-135	Stihl 1119-358-7702	**Fuel Line** Fits MS381	
07-075	Stihl 1123-358-7701	**Fuel Line** Fits 021, 023, & 025	
07-136	Stihl 1124-358-7700	**Fuel Line** Fits MS640, 660, 780, 088, & 084	
07-072	Stihl 1127-358-7702	**Fuel Line** Fits 029, 034, 036, & 039	
07-134	Stihl 1128-358-7701	**Fuel Line** Fits MS341, 361, 440, & 460	
07-149	Stihl 1127-647-9400	**Oil Hose** - NEW Fits 026, 034, 036, 064, 066, MS 260, & 361	
36-420	Stihl 1130-647-9400	**Oil Hose** - NEW Fits Stihl 017, 018, MS170, & MS180	
07-167	Stihl 1123-141-8600	**Impulse Line** - NEW Fits Stihl 021, 023, 025, MS210, MS210C, MS230, MS230C, MS250, & MS250C	

OREGON	OEM	Type	Series	OD	HT
49-020	Walbro 188-12	Primer bulb	—	.60"	.55"
49-026	Walbro 188-11	Primer bulb	WR Series	.575"	.390"
49-027	Walbro 188-13	Primer bulb	HDA Series	.725"	.60"
49-028	Zama 0057003	Primer bulb	CIQ Series	.675"	.575"

Tygon® fuel lines, Oregon fuel lines and primer bulbs are compatible with up to 10% Ethanol blend fuels unless otherwise stated. Using Ethanol blends higher than 10% may speed deterioration and cause leakage.

Chainsaw Parts

OREGON	Replaces	Description

Fuel & Oil Caps

07-004	Homelite 69451 Homelite UP06862	**Duck Bill Valve** Fits XL, XL2, Super 2, & Homelite 63718 Used in fuel cap	
56-019	Stihl 0000-350-0520	**Fuel Cap** Fits 023, 025, 026, & 028	
07-131	1130-350-0500	**Fuel Cap** Fits 017, 018, 019, MS170, 180, & 190	
07-132	0000-350-0531	**Fuel Cap** Fits 066 & MS660	
56-018	Stihl 0000-350-0510	**Oil Cap**	

Fuel Filters

07-215	Universal	**Fuel Filter** For 3/16" inlet Fits 2-cycle engines on chainsaws, trimmers and blowers using porous plastic filter (40 micron)	
07-206	Echo 131205-06530 Tillotson OW-802	**Fuel Filter** Use with 1/8" fuel line OD: 9/16", length: 1-1/2"	
07-201	Homelite 64083-1 Tillotson 95-182	**Fuel Filter - Felt** Fits Oregon® 07-206 OD: 9/16", ID 1/4", length: 1"	
07-202	Homelite 59253 Tillotson 95-172	**Fuel Filter - Felt** Fits Oregon 07-207 OD: 13/16", ID: 7/16", length: 1"	
07-213	Husqvarna 503-4432-01 Husqvarna 5018776-01 Husqvarna 5018776-02 Husqvarna 5021618-01	**Fuel Filter** For 3/16" fuel line Fits models 36, 40, 41, 42, 45, 50, 51, 61, 66, 181, 281, 234, 298, 2100, 2101, & 394 Pro (165R, RX, 244RX)	
07-207	John Deere PT12362 Tillotson OW-497 Weed Eater 24841 Pouland 530091878	**Fuel Filter** Use with 1/8" fuel line OD: 13/16", length: 1-1/2"	

OREGON	Replaces	Description	

Fuel Filters

07-200	McCulloch 93720 McCulloch 216985 Homelite 49422 Homelite UP0387 Homelite 96639	**Fuel Filter** For most saws with 1/8" in tank pickup OD: 1/2", length: 1-1/4"	
07-204	McCulloch 63932	**Felt** OD: 3/4", length: 1"	
07-066	Poulan #530095646	**Fuel Filter** Use with 1/8" fuel line	
07-133	0000-350-3506	**Fuel Fliter** Fits TS410 & TS420	
07-109	Stihl 1115-350-3503	**Fuel Filter** Use with 1/4" fuel line For most models of chainsaws OD: 23/32", length: 1-3/4"	
07-217	Stihl 1120-350-3500	**Fuel Filter** For chainsaws Fits models 021, 023, 025, 020T, 070, 034, 038, 029, & 036	
07-205	Stihl 1110-358-1800	**Foam Fuel Filter** OD: 5/8", length: 1-1/4"	
07-214	Walbro 125-527	**Fuel Filter** Dual filtration felt and stainless steel mesh element	
07-219	Walbro 125-528	**Fuel Filter** For 3/16" fuel line and engines up to 80cc	
07-137	Walbro 125-552	**Fuel Filter** Universal	
07-208	Zama ZF2	**Fuel Filter** For 3/16" fuel line Use on small cc engines 175 micron	
07-209	Zama ZF3	**Fuel Filter** For 1/8" fuel line Use on larger cc engines 175 micron	

Chainsaw Parts

Fuel Filters

OREGON	Replaces	Description	
07-210	Zama ZF4	**Fuel Filter** For 3/16" fuel line Use on larger CC engines 175 micron	
07-211	Zama ZF5	**Fuel Filter** For 1/4" fuel line Use on larger CC engines 175 micron	

Starter Pulleys

55-811	Homelite 97768A	**Starter Pulley** Fits XL, Super 2, 240, & 245 series OD: 2-9/16" Use Oregon® 43-528 (OBS) replacement spring	
31-002	Husqvarna 5031024-05	**Starter Pulley** Fits chainsaw models 61, 268, & 272	
31-006	Stihl 1123-195-0400	**Starter Pulley** Fits models 017, 018, 023, & 025	

Starter Springs

OREGON	OEM No.	Description
43-540	Husqvarna 50 15 204 01	Starter Spring Fits 61 Rancher, 162, 181, & 266
43-562	Husqvarna 50 17 631 01	Starter Spring Fits 136, 141, 240, 245, 334, 335, 336, 338, 339, 36, 40, 41, 45, 50, 51, & 55
43-540	Jonsered 501 52 04 01	Starter Spring Fits 630, 630 Super, & 670
43-694	Stihl 1118-190-0600	Starter Spring Fits 024, 026, 028, 032, 034, 08S
43-699	Stihl 1117-190-0601	Starter Spring Fits 038, 041 (5816401...), 045 (5919431...) 048, 050, 051 (674961...), 056, & 075
43-685	Stihl 4112-195-1600	Starter Spring Fits FS60, 61E, 65AVE, 80, 80E, 90AVE

Miscellaneous Saw Part

56-030	Stihl	**Worm and Spring** Fits 029, 034, 036, & 039	

Chainsaw Parts

Chainsaw Parts

OREGON®

Accessories: Shop, Field, & Safety

SFS

Table of Contents – Accessories: Shop, Field, & Safety

Sections SFS

I Shop Items, Filing & Accessories

Shop Floor Modular Displays 4–6
Saw Chain Filing and Accessories 7–11
Forestry Accessories 12–15
Arborist Saws 16–17
Felling Lever, Lifting Picks and Tongs 18
Chainsaw Oils and Screnches 19–20
Shop Sales & Point of Purchase 21–23

II Shop Tools

Auto Saw Chain Grinders 26–31
Saw Chain Bench Grinders 32–40
Grinding Wheels and Stand 40–41
Saw Chain Spinners and Breakers 42–47
Replacement Parts (obsolete tools) 48–57
Lawn Mower Blade Grinders 58–63
Lawn Mower Ramps . . . . . SFS 64
Shop Tools 64–68
Tire Tools 68–71

III Field Supplies

Equipment Racks and Accessories 74–76
Mower Sulkies 77–78
VP Fuels and Treatments 79–81
2 and 4-Cycle Oils 82–83
Bar and Chain and Hydraulic Oils 84
Fuel Stabilizer 85
VP Power Wash 85
Fuel and Oil Cans, Storage, and Containment 86–91
Lubricants, Grease, Cleaners, Solvents, Sealants, and Glues 91–99
Hardware Assortments, Nuts, Bolts, and Washers 100–106

IV Safety

Chainsaw Safety Overview 110–111
Safety Helmet and Footware 112–113
Chainsaw Chaps 114
Rain Gear 115
Gloves 116
Safety Eyewear 117–120
Face Masks 120
Hearing Protection 121

SHOP ITEMS, FILING & ACCESSORIES

Shop Floor Modular Displays . . . . . SFS 4–6

Saw Chain Filing and Accessories . . . SFS 7–11

Forestry Accessories . . . . . SFS 12–15

Arborist Saws . . . . . SFS 16–17

Felling Lever, Lifting Picks and Tongs . . SFS 18

Chainsaw Oils and Screnches. . . . . SFS 19–20

Shop Sales & Point of Purchase . . . SFS 21–23

Shop Floor Modular Displays

- Heavy-duty and attractive
- Tough metal silver vein finish
- Excellent versatility
- Easy setup
- Configure as wall, square or triangle display
- Single grid with optional base adapter

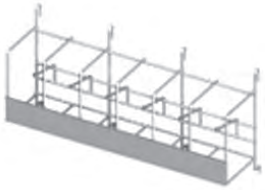

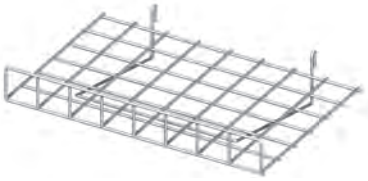

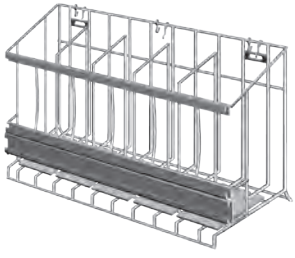

OREGON	Description	Product Code

Shop Floor Modular Displays

542600	**Single Grid Panel** Width: 24" (.61 m), height (including sign): 82-1/2" (2.1 m) One (1) sign holder, one (1) sign, two (2) "L" support legs Ten (10) 4" (10.2 cm) looped metal safety hooks Ten (10) 8" (20.3 cm) looped metal safety hooks
542601	**Forestry Display Modular Triangle Unit** Three (3) single grid panel sets with brackets to create triangle
F00-284	**Blade Display Modular Triangle Unit** Three (3) Single Grid Panels Six (6) Blade Cage holders
F00-280	**Oregon® Signs** One (1) package of three (3) Oregon signs Printed on both sides
F00-281	**Single Base Adapter** One (1) per box, (1) display panel (P/N 542600 not included) Slips into the "H"-shaped base and stands on its own Product can be displayed on both sides
F00-282	**Shelf** One (1) per box Depth: 12" (30.5 cm), width: 24" (61 cm) Front lip
F00-283	**Mower Blade Cage** One (1) per box Holds 6 different type of blades Includes label holder
F00-283-A	**Mower Blade Cage – Wide Slots** One (1) per box, 3-1/4" slots
F00-286	**8" (20.3 cm) Looped Safety Metal Hook** Ten (10) per bag
F00-287	**4" (10.2 cm) Looped Safety Metal Hook** Ten (10) per bag
542196	**4" (10.2 cm) Prong Hooks** Ten (10) per bag
542197	**2" (5.1 cm) Prong Hooks** Ten (10) per bag
500032	**Chain Loop Display – Gravity Feed**

When setting up a display, always balance product weight on each side and never attach to an insecure surface. **Read instruction sheet carefully.**

Shop Floor Pinwheel Display

OREGON	Description	Product Code
605890	Display Rack, 4-Panel Spinner – NEW	

The complete display (605890) includes one each of the items below, except for hooks are 80 each.

605886	Display Catalog Holder, Spinner – NEW
605887	Sign Holder, Spinner Display 22 in x 7 in – NEW
605888	Display Hook, 4 in Grid Hook Black – NEW
605889	Display Rack, 4-Panel Spinner Only – NEW
560840	Slatgrid, Sign, 22 x 7

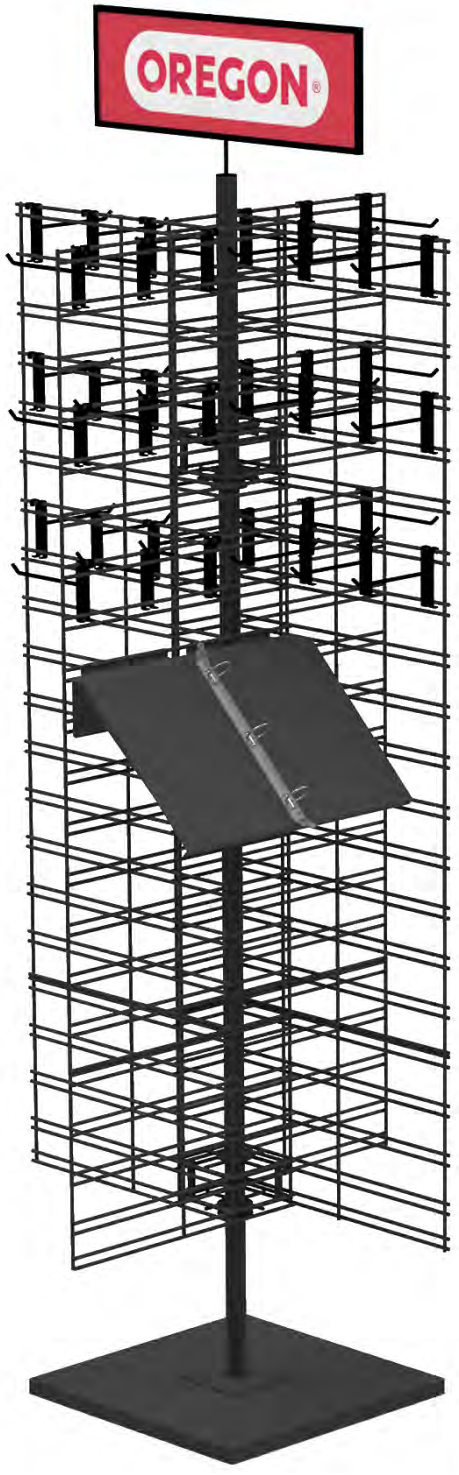

605890

560840

605887

605886

605888

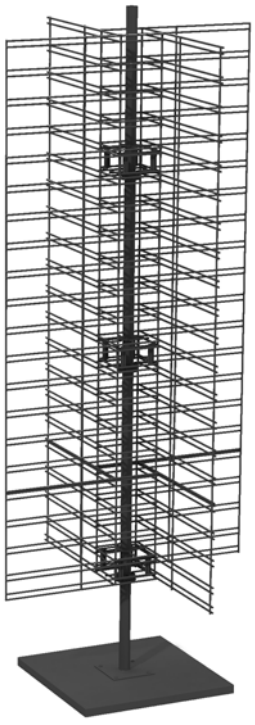

605889

Color ID™ Files

Introducing a new feature to our premium Oregon Round Files: Color ID.

Color ID is a visual indicator that makes it easier to select the right file straight out of your tool box. Our most popular premium round files are now marked with a distinctive color that denotes the diameter of the file.

You'll find that the Oregon Round Files are the same great product you've come to rely on over the years; we've just added this new exclusive feature to help simplify your day.

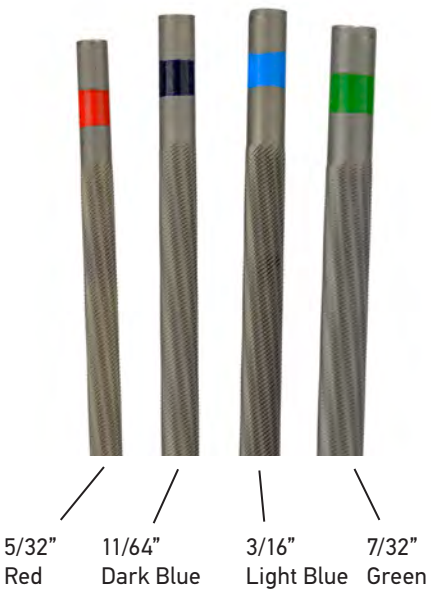

Summary of Changes & Affected Part Numbers

Part Number	Diameter	Color ID™
12-Pack Round Files		
70502	7/32" – 5.5 mm	Green
70503	3/16" – 4.8 mm	Light Blue
70504	5/32" – 4.00 mm	Red
70505	13/64" – 5.2 mm	No Color ID
70511	11/64" – 4.5 mm	Dark Blue
4x3-Pack Round Files		
70502T	7/32" – 5.5 mm	Green
70503T	3/16" – 4.8 mm	Light Blue
70504T	5/32" – 4.0 mm	Red
6-Pack Round Files		
90410	5/16" – 8.0 mm	No color ID

Saw Chain Filing

Oregon® Round Files

The double-cut file from Oregon is an outstanding file for sharpening saw chain.

2-pack

4x3-Pack
4 vinyl packs with 3 files each

12-pack

OREGON	2-Pack Diameters	Product Code
40459	5/32"	4.0 mm
40461	11/64"	4.5 mm
40460	3/16"	4.8 mm
40458	7/32"	5.5 mm
	4x3-Pack Diameters	
70504T	5/32"	4.0 mm
70503T	3/16"	4.8 mm
70502T	7/32"	5.5 mm
	12-Pack Diameters	
70504	5/32"	4.0 mm
70511	11/64"	4.5 mm
70503	3/16"	4.8 mm
70505	13/64"	5.2 mm
70502	7/32"	5.5 mm
70501	1/4"	6.4 mm
	6-Pack Diameter	
90410	5/16"	8.0 mm

Note: See "Filing Angles" in the Saw Chain section's "Saw Chain Sharpening Chart" for the correct file.

- Superior performance
- Finest steel material
- State-of-the-art production and finishing processes
- Smooth filing action
- Long stay-sharp
- Resists clogging

Oregon Flat Files

Used in combination with an Oregon depth gauge tool.

OREGON	Description	Product Code
12211	6" Flat Depth Gauge File	

- Aggressive cutting design
- Made from the finest steel
- Specially heat-treated for maximum stay-sharp
- Resists clogging
- 6" working length

Depth Gauge Tools

A major factor affecting any saw chain's level of safety and performance is the depth gauge setting.

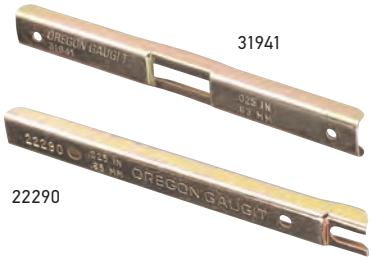

OREGON	Description – 10-Packs	Product Code
31941	.025" Drop-Center Depth Gauge Tool	
22290	.025" Depth Gauge Tool	
22291	.030" Depth Gauge Tool	
38850	.050" Depth Gauge Tool	
26800	.060" Depth Gauge Tool	
107529	.070" Depth Gauge Tool	

- Makes accurate, consistent depth gauge settings easy
- Available in five sizes with built-in .025", .030", .050", .060" or .070" depth gauge settings

Depth Gauge Tool & Flat File

OREGON	Description	Product Code
40466	Depth Gauge Filing Kit Includes .025" drop-center depth gauge tool & flat file Display pack	

File Handles

Anytime files are sold, file handles can be sold too, using the Oregon® display box.

OREGON	Description	Product Code
30870-B	File Handles Display box (100 handles) Fits on the sales counter Holds 100 wooden handles Has a stand-up space for files (files not included)	
558286	File Handles Bulk pack (25 handles)	

File Guide

Assembled file guide includes: one round file, one frame, and one wooden handle – display pack.

- Grips file securely
- Lines on the guide's frame make it easy to align the file consistently and correctly
- Keeps file at the correct depth

	Chain Number by Pitch						
OREGON	1/4	3/8 low pro	.325	3/8	.404	File Diameter	Product Code
37534	25	91				5/32" (4.0 mm)	
31692		90	33 34 35			4.5 mm (11/64")	
31690			95 20 21 22			3/16" (4.8 mm)	
31686				72 73 75	26 27 58 59 68	7/32" (5.5 mm)	

Saw Chain Filing

Professional Maintenance Kit

The Oregon® Professional Maintenance Kit for chainsaw chains and guide bars.

OREGON	Chain Number by Pitch 1/4	3/8 low pro	.325	3/8	.404	File Diameter	Product Code
558488	25	91				5/32" (4.0 mm)	
558549		90	33 34 35			4.5 mm (11/64")	
558550			95 20 21 22			3/16" (4.8 mm)	
558551				72 73 75	26 27 58 59 68	7/32" (5.5 mm)	

Includes One of Each:

- Assembled file guide with file for chain top-plate maintenance
- Assembled wooden handle & flat file and one depth gauge tool for chain depth gauge maintenance
- Bar groove cleaner to clean guide bars groove & oil holes
- User manual
- Bar and chain measuring tool

Features:

- Easy-to-carry rolled-up pouch
- Highly visible red color
- Easy to attach on waist belt

Chain Sharpening Kits

OREGON	Chain Number by Pitch 1/4	3/8 low pro	.325	3/8	.404	File Diameter	Product Code
38276	25	91				5/32" (4.0 mm)	
38278		90	33 34 35			4.5 mm (11/64")	
38277			95 20 21 22			3/16" (4.8 mm)	
38275				72 73 75	26 27 58 59 68	7/32" (5.5 mm)	

Includes:

One (1) assembled file guide
Two (2) wooden file handles
One (1) round file
One (1) flat file
One (1) .025" drop-center depth gauge tool
Display pack

Professional Bar-Mount Filing Guide

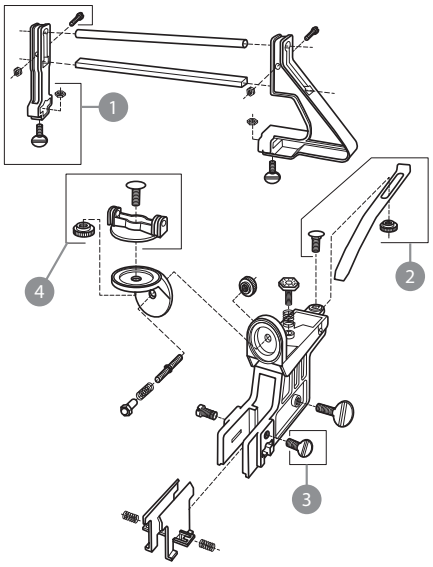

This precision-built filing guide gives consistent, accurate sharpening results comparable to that of a motorized grinder for a fraction of the cost.

- Easy to install on the saw guide bar with the chain in place
- Replacement parts are available separately
- File not included

OREGON	Description	Product Code
557849	Professional Filing Guide – Display Pack	
39495	Stop-Spring Kit	
39498	Swivel Kit	

OREGON	No.	Replacement Parts (557849 & 23736A)	Product Code
39491	1	Arm Kit	
39495	2	Stop-Spring Kit	
39497	3	Small Thumb Screw (5-Pack)	
39498	4	Swivel Kit	

12-Volt Electric Sure Sharp®

A durable, economical tool that makes hand-sharpening easy.

- Rugged and reliable
- Withstands periods of extended use
- Runs on standard 12-Volt auto-type battery or connect using automobile power adapter
- Sharpens any round-ground 1/4", 3/8" Low Profile™, .325", 3/8" or .404" pitch chain
- Shank lock feature allows easier stone replacement
- Includes: four sizes of sharpening stones (5/32", 3/16", 7/32", & 4.5 mm), and collet wrench

OREGON	Description	Product Code
585015	Electric Sure Sharp 12 Volt – display pack	

Forestry Accessories

Sharpening Stones

3-Pack

25-Pack

For use with Oregon® Electric Sure Sharp® and other grinders. These stones leave an excellent cutting edge on saw chain.

- Available in packs of 3 or 25
- Choice of diameters
- Available in standard or threaded shanks to fit most brands of grinders

Note: See the "Saw Chain Sharpening Chart" in the Saw Chain section for the correct stone diameter (file diameter) to use on your Oregon chain.

Replacement Stones for Oregon 28588A, 28588, 30846A, 30846, 585015, & 575214

OREGON	3-Pack for Oregon		Threaded	Product Code
31397	5/32"	4.0 mm	No	
32628	11/64"	4.5 mm	No	
31396	3/16"	4.8 mm	No	
31398	7/32"	5.5 mm	No	
	25-Pack for Oregon			
31369	5/32"	4.0 mm	No	
31370	3/16"	5.5 mm	No	
31371	7/32"	5.5 mm	No	

Replacement Stones for Other Grinders

OREGON	3-Pack for Others		Threaded	Product Code
31399	5/32"	4.0 mm	Yes	
32630	11/64"	4.5 mm	Yes	
31401	3/16"	4.8 mm	Yes	
31400	7/32"	5.5 mm	Yes	
	25-Pack for Others			
31372	5/32"	4.0 mm	Yes	
31373	3/16"	5.5 mm	Yes	
31374	7/32"	5.5 mm	Yes	

Grease Guns & Grease Cartridges

These products reduce friction and enhance performance in a variety of chainsaw applications

- Helps prevent premature wear, especially on guide bar noses
- Choice of standard, premium, & premium steel grease guns
- Refill cartridges can be used in all three types of guns

110534

40469-A 21939

OREGON	Description	Product Code
40469-A	Single-Use Grease Gun – Display Pack	
21939	Premium Grease Gun	
110534	Premium Steel Grease Gun with Zerk Adaptor & Refill Cartridge	
	Refills	
108653	Refill Grease Cartridges, 3-Pack	

108653

Grease Gun Display Box

Encourages impulse purchases and increases accessory sales.

- Fits on dealer's customer counter
- Holds 40 economical, disposable, easy-to-use grease guns

OREGON	Description	Product Code
31187-A	Plastic, Single-Use Grease Gun Display Box (40-Pack)	

Bar Rail Dresser & Replacement Files

This compact tool goes anywhere and makes it easy to remove the effects of normal wear or remove minor damage as it dresses your bar's rails back to square.

- Tool can be used in varied positions
- File dresses the outer edges of the rails or tops of rails
- Handle extremely durable
- Files available separately for easy replacement
- Outstanding value
- Long overall tool life

OREGON	Description	Product Code
111439	Bar Rail Dresser – Display Pack	
	Replacement Parts	
111589	Replacement Files, 6-Pack	

Bar Covers

Protects your bar and chain from damage.

- Durable plastic material
- Available in two lengths

OREGON	Description	Product Code
28934	Oregon® 16" Bar Cover	
28933	Oregon 20" Bar Cover	

Forestry Accessories

Logger's Filing Vise

Makes chain maintenance easier, especially in the field.

- Goes anywhere
- Vise's forks drive into any stump
- Vise's jaw locks the bar securely

OREGON	Description	Product Code
26368A	Logger's Filing Vise – Display Pack	

Guide Bar Groove Cleaner

OREGON	Description	Product Code
13616	Bulk Guide Bar Groove Cleaner	

Guide Bar & Chain Measuring Tool

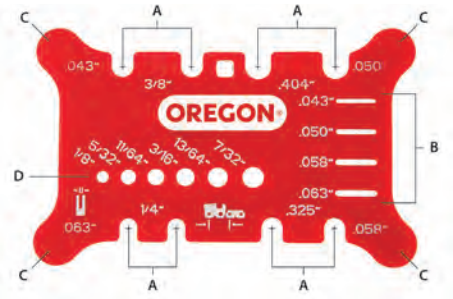

Pocket-sized gauge for quick and easy identification. Measures the following:

A. Chain pitch
B. Chain gauge
C. Bar groove width
D. File size

OREGON	Description	Product Code
556418	Guide Bar & Chain Measuring Tool 50-pack, supplemental instructions available	

Felling Wedges

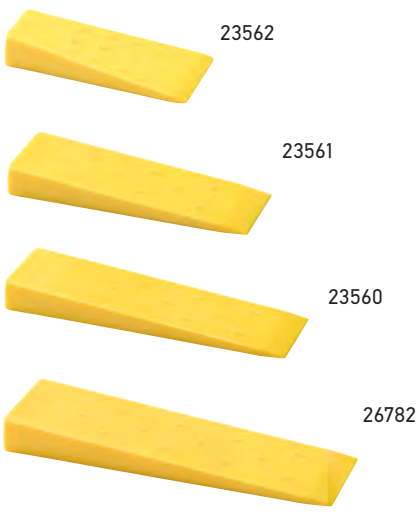

558732

The wedge designed for professional loggers.

- Durable
- Light-weight
- Serrations hold wedge in the tree securely

OREGON	Description	Product Code
558732	5-1/2" Oregon® Wedge – Integrated Hang Tab	
559245	8" Oregon Wedge – Integrated Hang Tab	
23562	5-1/2" Oregon Bulk Plastic Wedge	
23561	8" Oregon Bulk Plastic Wedge	
23560	10" Oregon Bulk Plastic Wedge	
26782	12" Oregon Bulk Plastic Wedge	

Arborist Saws

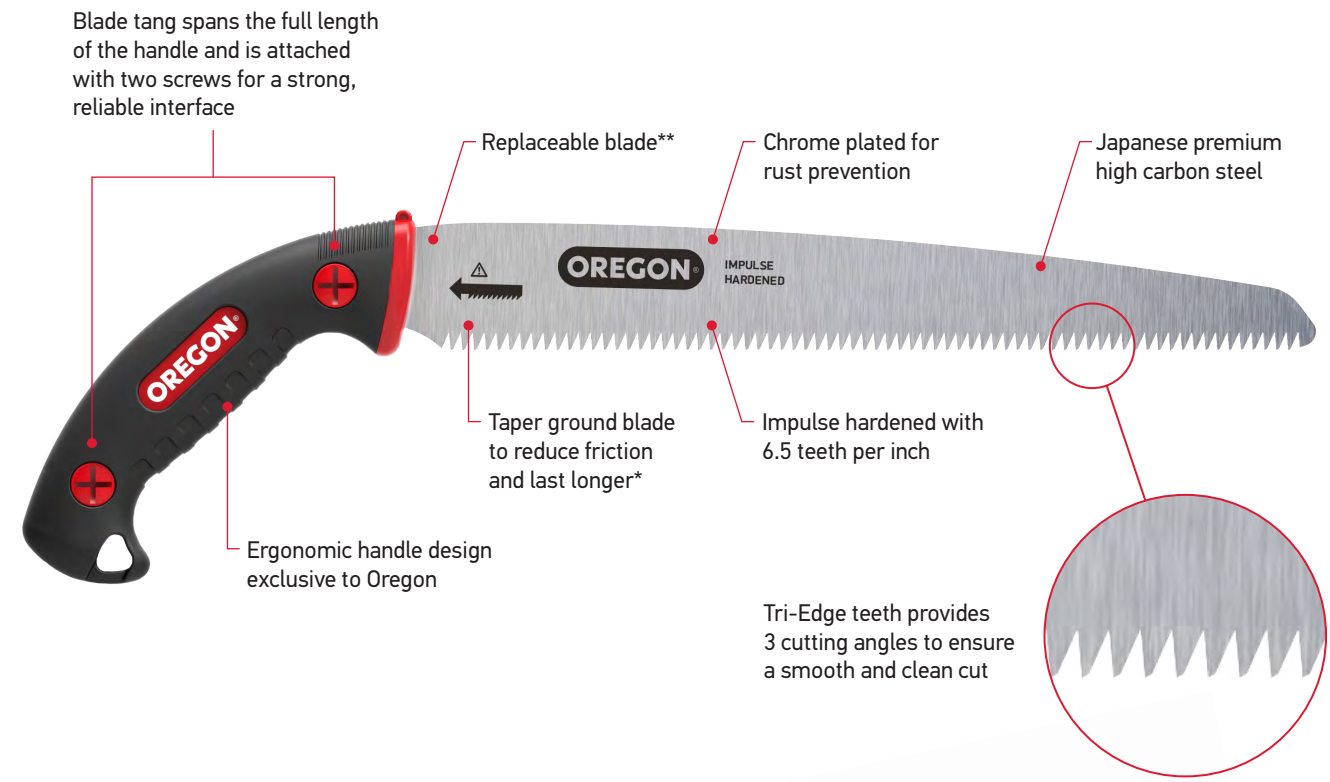

*Compared to set teeth blades
**Replacement blades available separately for purchase

OREGON	Description	Product Code

Straight Hand Saw

600138	**Straight Hand Saw** Includes scabbard for blade
600140	**12-Inch Straight Replacement Blade**
600137	**Replacement Nuts for Handle** Pack of 10

Includes Scabbard

Curved Hand Saw

600136	**Curved Hand Saw** Includes scabbard for blade
600139	**13-Inch Curved Replacement Blade**
600137	**Replacement Nuts for Handle** Pack of 10

Includes Scabbard

Forestry Accessories

Felling Lever

Edge designed for excellent grip on wood

- Heavy-duty forged lever
- Sliding, forged cant hook
- Bent handle provides extra leverage
- Comfortable non-slip handle

OREGON	Description	Product Code
536305	Long-Handled Felling Lever – 51" Long	

Lifting Picks

Notches for extra grip in frozen wood

Non-slip handle with stop end

- Significantly easier log handling
- Ergonomic, light-weight aluminum handle
- Sharp tip grips wood easily

OREGON	Description	Product Code
536319	Lifting Pick – 19.7"	
536320	Long Lifting Pick – 27.5"	

Lifting Tongs

Non-slip ergonomic leather handle (Patent Pending)

- Forged steel
- Non-slip leather (small tongs) or rubber (large tongs) handle
- Articulated joints

OREGON	Description	Product Code
536321	Small Lifting Tong – 8" Jaw Opening	
536306	Large Lifting Tong – 12" Jaw Opening	

Marking Crayons & Crayon Holder

Writes and marks on wood, metal, stone, concrete, tiles, ceramic, plastic, glass, rubber, etc.

Crayon Features

- 6-sided shape to prevent rolling
- Paper sleeve
- Diameter: 12 mm; length: 120 mm
- 12 per box

Crayon Holder Features

- Made of durable metal
- For round and hexagonal crayons with diameter of 10-12 mm

OREGON	Description	Product Code
295360	Marking Crayon (12-Pack) – Blue	
295361	Marking Crayon (12-Pack) – Red	
295363	Marking Crayon (12-Pack) – Yellow	
295365	Marking Crayon (12-Pack) – Black	
520272	Crayon Holder	

Guide Bar & Chain Oil

Specially compounded to provide extra high tackiness and reduce "throw off" even under adverse weather conditions. Provides maximum engine power, low friction and faster cutting time. High film strength prevents wear or scuffing of chain links and guide bars while protecting metal parts against corrosion and rust. Resists build up of deposits such as pitch, sap, or gum.

OREGON	Description	Qty.	Size	Product Code
54-026	Guide Bar & Chain Oil	12	1 quart	
54-059	Guide Bar & Chain Oil	4	1 gallon	

Only One™ Two-Cycle Engine Oil

Only One is a two-cycle engine oil that's easy to use. Only One is a "universal mix" product, meaning no more confusing gas-to-oil mixtures. Just follow the "gallons mixed" information on each package.

- Reduces particulate emissions and oil consumption by at least 50% over standard oil
- Good for all two-cycle engines
- Works with gasohol
- Complies fully with California's Proposition 65 guidelines

OREGON	Description	Qty.	Makes	Product Code
40092	1.8 oz. Pillow Pack	48	1 gallon	

Forestry Accessories

Screnches

Dimensions (mm)	Driver Type:										
	S1 x S2	13 x 19	13 x 19	13 x 19	19 x 10	16 x 13	19 x 17	19	19 x 14	21 x 17	15 x 19	16 x 11
	A1	25	21	33	35	35	27	12	35	30	28	40
	L2	175	177	171	172	172	177	177	175	172	177	177
	L1	52	44	68	70	72	57	51	70	60	56	80
Oregon® No's:		57-005	57-017	57-016	57-003	57-002	57-008	57-019	57-006	57-010	57-014	57-001
Dolmar			✓				✓					
Echo			✓	✓	✓				✓			
Homelite												✓
Husqvarna		✓	✓	✓		✓						
John Deere				✓	✓	✓			✓			
Jonsered		✓	✓			✓					✓	
McCulloch		✓										✓
Efco / Oleo-Mac				✓	✓		✓					
Partner		✓	✓			✓						
Pioneer									✓			
Poulan			✓						✓		✓	
Shindaiwa		✓	✓		✓							
Stihl			✓	✓			✓	✓		✓		

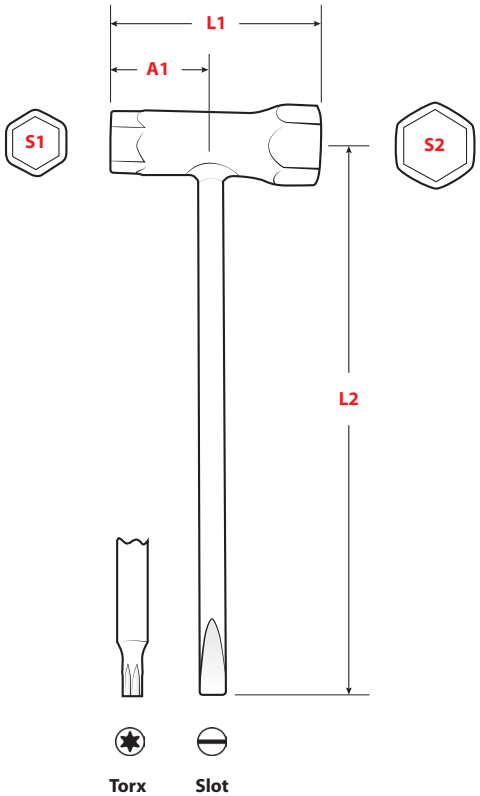

OREGON	Description	Product Code

Safety Eyewear* Display Rack

42-149 **Safety Eyewear Display Rack**
Holds 24 pair of eyewear
4-sided, mounted on turntable base
Two mirrors attached
Oregon® logo
*Eyewear not included

Oregon Point-of-Purchase Support

42-215 **5" Display Metal Hook**

Shop Items

OREGON	Description	Product Code

Parts Bin Boxes

F00-230 **Parts Box — Cardboard**
4" x 12", four dividers
50 per case (order by case, priced by case)

F00-231 **Parts Box — Cardboard**
8" x 12", four dividers
30 per case (order by case, priced by case)

F00-232 **Parts Box — Cardboard**
12" x 12", no dividers provided
25 per case (order by case, priced by case)

Blade Boxes

22STD **Blade Box**
22" standard
Bundle of 50 boxes
Length: 22-11/16", width: 3-7/16", height: 2-11/16"

22TALL **Blade Box**
22" tall
Bundle of 50 boxes
Length: 22-11/16", width: 5-3/4", height: 2-1/2"

26STD **Blade Box**
26" standard
Bundle of 50 boxes

30STD **Blade Box**
30" standard
Bundle of 50 boxes

Inventory Essentials

10-002 **Service Tickets**
Tear-off customer receipt
Number for tracking purposes
500 per pack
Priced per pack

OREGON	Description	Product Code

Oregon Catalogs

OEP-FOR-1 **2019 Oregon Dual Line Catalog**
Combines 2019 Oregon Outdoor Power Equipment, Forestry, Lawn & Garden, & Shop, Field, & Safety products

Training Tools

Oregon Cutter Display — This eye-catching display is a great way to promote Oregon saw chain on your counter. These 10X scale models of some of our most popular cutters can be used to show the features of either Oregon 72LPX or 72V chains. It makes a great conversation starter too.

551655 **Oregon Cutter Display**
Stand with 72LPX cutter
Height: 6-1/4"
Length: 8"
Width: 3-1/4"

551654 **Oregon Cutter Display**
Stand with 72V cutter
Height: 6-1/4"
Length: 8"
Width: 3-1/4"

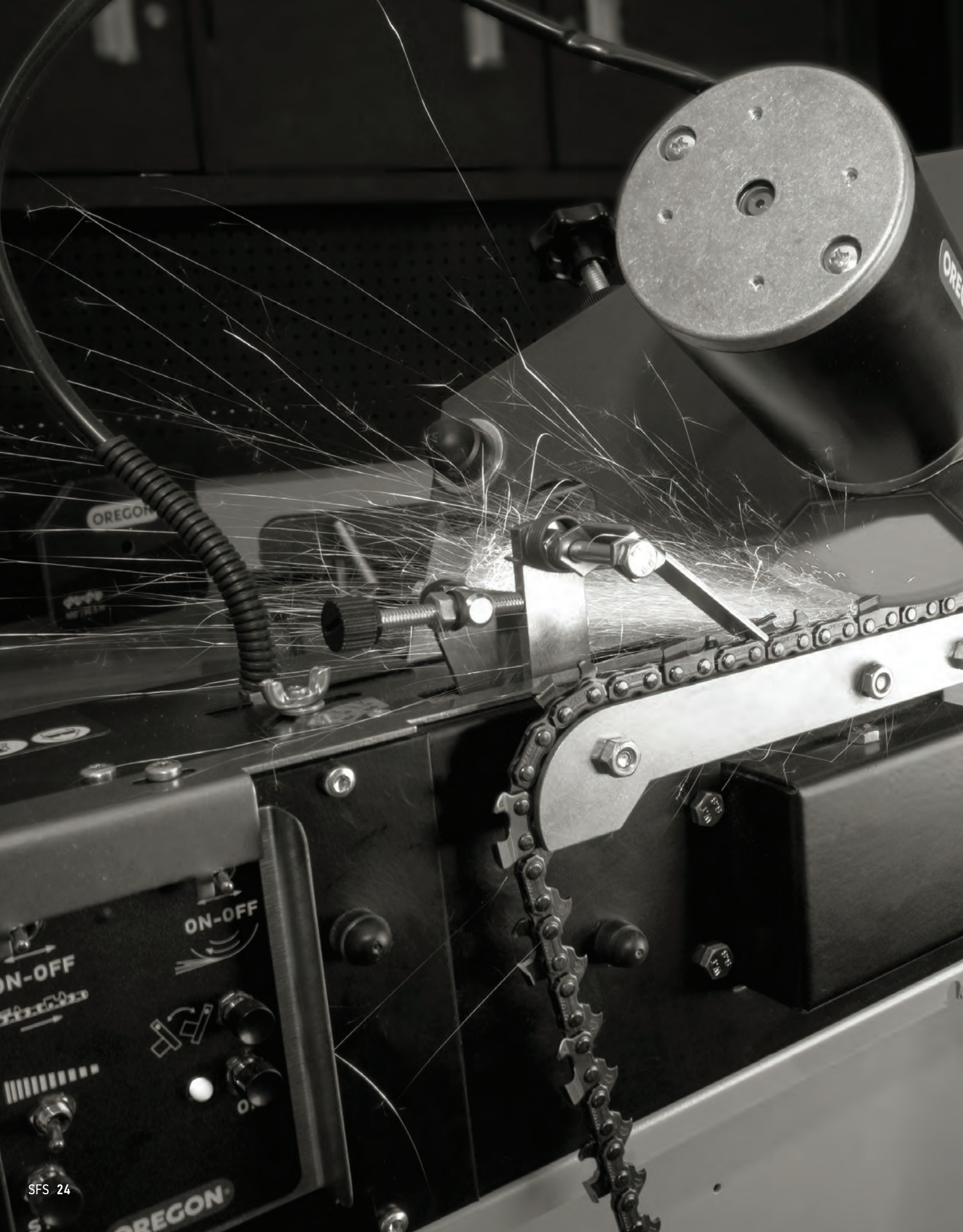
ON-OFF
OREGON

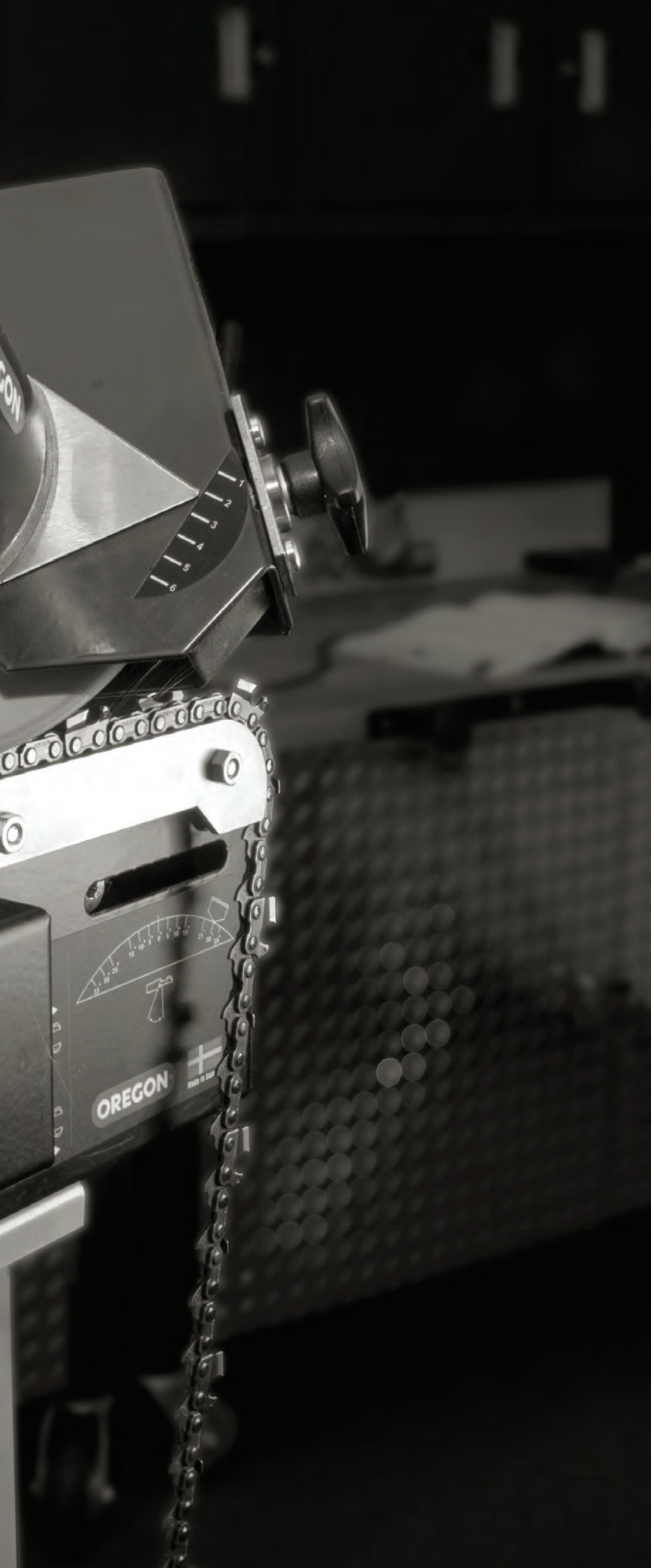

SHOP TOOLS

Auto Saw Chain Grinders . . . . . SFS 26–31
Saw Chain Bench Grinders . . . . . SFS 32–40
Grinding Wheels and Stand . . . . . SFS 40–41
Saw Chain Spinners and Breakers . . SFS 42–47
Replacement Parts (obsolete tools) . SFS 48–57
Lawn Mower Blade Grinders . . . . . SFS 58–63
Lawn Mower Ramps . . . . . SFS 64
Shop Tools . . . . . SFS 64–68
Tire Tools . . . . . SFS 68–71

The 700-Series Auto Chain Grinders have benefits for both dealers and professional end users seeking an efficient, profitable solution for high-volume chain sharpening.

700-Series Advantage

Labor Cost Savings
Once the learning phase is completed, the machine requires minimal set-up and supervision, freeing up staff for more value-added tasks.

Consistent, High-Quality Grind
Auto chain grinders minimize human involvement, and offer a consistent, standardized, high-quality grind.

FOR DEALERS

Profit Center
With the break even time as short as 58 days, grinding chains with these machines makes chain sharpening profitable.

Increased Foot Traffic
A better-quality grind results in satisfied customers and motivates them to revisit the shop, increasing foot traffic and customer retention.

FOR PROFESSIONALS

Decreased Downtime
For professional end users, having grinders out in the field and sharpening chain in a short time at a better quality increases efficiency and decreases downtime on the actual job.

720-120
All-in-One

- Auto feeding
- Auto grinding
- Air tensioniing
- Auto stopping
- Simultaneous cutter and depth gauge grinding, gullet cleaning
- Digital counter
- Skip tooth grinding (standard: 3/8")
- Stand with air tensioning
- Incremental speed setting

710-120
Standard

- Auto feeding
- Auto grinding
- Auto stopping
- Two-speed setting

Optional Accessories

Stand with air tensioning

Chain weight

ACCESSORIES

Stand & Air Tensioner

OREGON	Description
700-STND	Stand & Air Tensioner VS113937-189895 *Included with the 720-120 but is an option on the 710-120*

Telescoping Chain Extension

If you have extra long (.404" or 3/4") harvester chains, our telescopic extension is an ideal choice. It accommodates up to 12 ft. chain loops.

590247	Telescopic Chain Extension VS49867-83112

Air Tensioner Extension

Shorter chains—smaller than 40 drive links—require this extension to properly engage the tensioning system.

591152	Air Tensioner Extension VS12537-20895

Chain Weight

590246	Chain Weight VS9055-15092

Grinding Wheels

Oregon® makes grinding wheels designed specifically for the 700-Series that are specially formulated to reduce friction and prevent burning. The wheels leave a sharper and cleaner finish on the cutters.

OREGON	Description
5–7/8" Ceramic Grinding Wheels	
OR600-18	1/8" (3.2mm) Wheel Grinds 3/8" Low Profile™, 1/4" VG3330-5550
OR600-14	1/4" (6.4mm) Wheel Grinds depth gauge only VG3330-5550
OR600-38	3/8" (10 mm) Wheel Grinds 3/4" depth gauge only VG3330-5550
OR600-316	3/16" (4.8 mm) Wheel Grinds 0.325", 3/8", .404" VG3330-5550
OR600-516	5/16" (7.9 mm) Wheel Grinds 3/4" pitch VG3330-5550

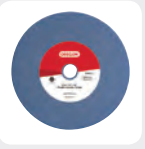

5–3/4" CBN Grinding Wheels	
OR534-18-CBN	1/8" (3.2mm) Wheel Grinds 3/8" Low Profile, 1/4" VG15358-25597
OR534-316-CBN	3/16" (4.8 mm) Wheel Grinds 0.325", 3/8", .404" VG15358-25597
OR534-516- CBN	5/16" (7.9 mm) Wheel Grinds 3/4" pitch VG15358-25597

720-120 – All-in-One Auto Grinder

The most efficient option for up to .404" pitch, the All-in-One 720-120 simultaneously sharpens the cutter, sets the depth gauge, and cleans the gullet. Stand and chain tensioner is included.

OREGON	Description	Product Code
720-120	All-in-One Auto Grinder	

Included Accessories

700-STND	Stand & Air Tensioner
OR600-18	1/8" (3.2mm) Wheel — Grinds 3/8" Low Profile™, 1/4"
OR600-316	3/16" (4.8 mm) Wheel – Grinds 0.325", 3/8", .404"

720-120 – Replacement Parts Diagram

No.	OREGON	Replacement Parts	Product Code
1	590713	Adjuster complete	
2	590690	Chain lock	
3	590837	Holder	
4	590704	Spring	
5	590703	Chain pusher	
6	590684	Motor cover	
7	590685	Turning motor	
8	590702	Tension spring	
9	590856	Cam curve assembly	
10	590819	Turning motor assembly	
11	590688	Micro switch	
12	590820	Wiring harness	
13	590821	Chain vise complete	
14	590822	Control panel assembly	
15	590691	PDE bearing	
16	590834	Control unit (PCB)	
17	590694	Bolt M6 x 30	
18	590695	Stop arm, optional	
19	590825	Wire lifter assembly	
20	590859	Pneumatic valve assembly	
21	590697	Lock axis assembly	
22	590698	Motor housing	
23	590826	Potentiometer	
24	590827	Counter	
	590828	Battery for counter	
25	590858	Motor cover	
26	590829	Chain pusher motor assembly	
27	590832	Compression spring	
28	590836	Chain pusher skip tooth assembly	
29	590839	Grinding head cover	
30	590845	Grinding wheel guard	
31	590840	Grinding wheel centering knob	
32	590841	Grinding wheel nut	
33		Grinding wheel (see page SFS 25)	
34	590813	PDE bearing 10	
35	590842	Turning arm assembly	
36	590848	Center spring	
37	590850	Lifting arm assembly	
38	590849	Depth gauge motor assembly	
39	590857	Wiring harness	
40	590853	Depth gauge motor	
41	590854	Micro switch	
42	590832	Compression spring	
43	590844	Degree beam	
44	590843	Axis	
45	590817	Wire	
46	590912	Plastic nut	
47	590816	Ball bearing 6000ZZ	
48	590721	Grinding motor	
49	590855	Adjusting nut	
50	590838	Grinding head assembly	
51	590720	Adjuster assembly	

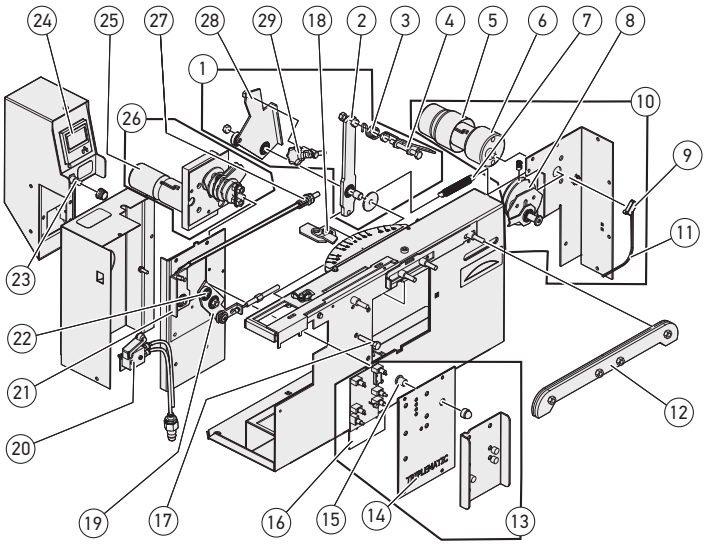

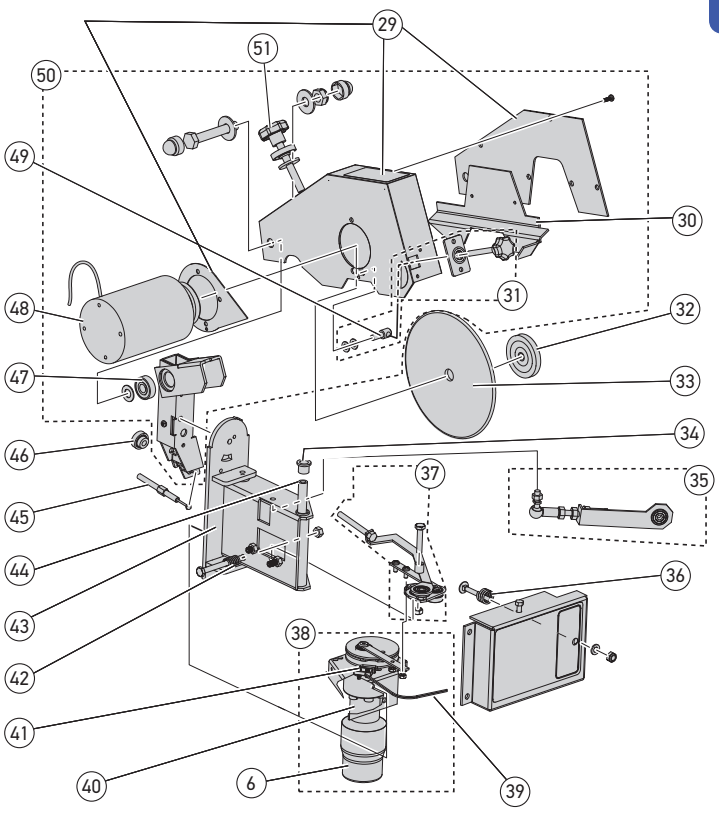

II

710-120 – Standard Auto Grinder

Save time and labor with the Oregon® 710-120. The standard model grinds chains up to .404" pitch.

OREGON	Description	Product Code
710-120	Standard Auto Grinder	

Included Accessories

OR600-18	1/8" (3.2mm) Wheel — Grinds 3/8" Low Profile™, 1/4"
OR600-316	3/16" (4.8 mm) Wheel – Grinds 0.325", 3/8", .404"
590681	Stop Clamp

Optional Accessories (sold separately)

700-STND	Stand & Air Tensioner
590246	Chain Weight

Optional

Stand and tensioning are sold separately for stability and chain tensioning

For use with 710-120 without a stand, this helps to tension the chain during sharpening

710-120 – Replacement Parts Diagram

No.	OREGON	Replacement Parts	Product Code
1	590713	Adjuster complete	
2	590690	Chain lock	
3	590837	Holder	
4	590704	Spring	
5	590703	Chain pusher	
6	590684	Motor cover	
7	590685	Turning motor	
8	590702	Tension spring	
9	590833	Cam curve assembly	
10	590686	Turning motor assembly	
11	590688	Micro switch	
12	590687	Wiring harness	
13	590848	Compression spring	
14	590689	Chain vise	
15	590692	Control panel assembly	
16	590691	PDE bearing	
17	590693	Control unit (PCB)	
18	590694	Bolt M6 x 30	
19	590695	Stop arm	
20	590696	Wire lifter assembly	
21	590859	Pneumatic valve assembly	
22	590697	Lock axis assembly	
23	590718	Motor housing	
24	590858	Motor cover	
25	590714	Chain pusher motor assembly	
26	590832	Compression spring	
27	590700	Chain pusher plate	
28	590720	Adjuster assembly	
29	590839	Grinding head cover	
30	590845	Grinding wheel guard	
31	590840	Grinding wheel centering knob assembly	
32	590841	Grinding wheel nut	
33		Grinding wheel (see page SFS 25)	
34	590847	Turning arm assembly	
35	590813	PDE bearing 10	
36	590814	Axis	
37	590851	Degree beam	
38	590817	Wire	
39	590816	Ball bearing 6000ZZ	
40	590721	Grinding motor	
41	590855	Adjusting nut	
42	590719	Grinding head assembly	

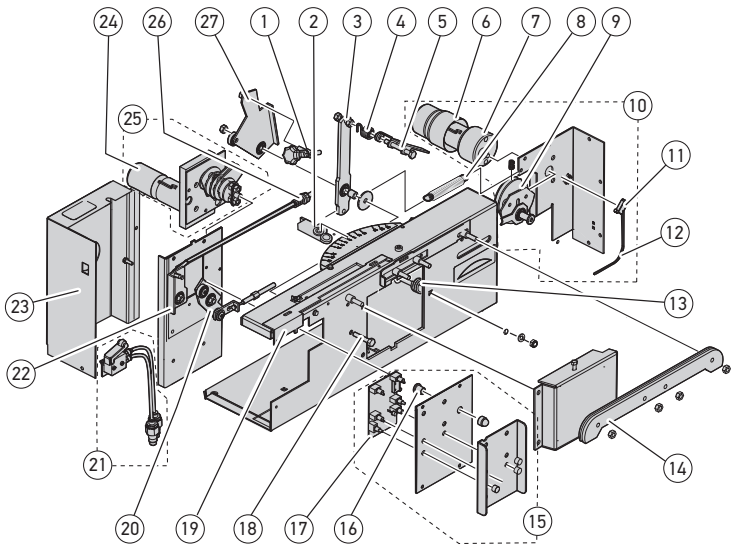

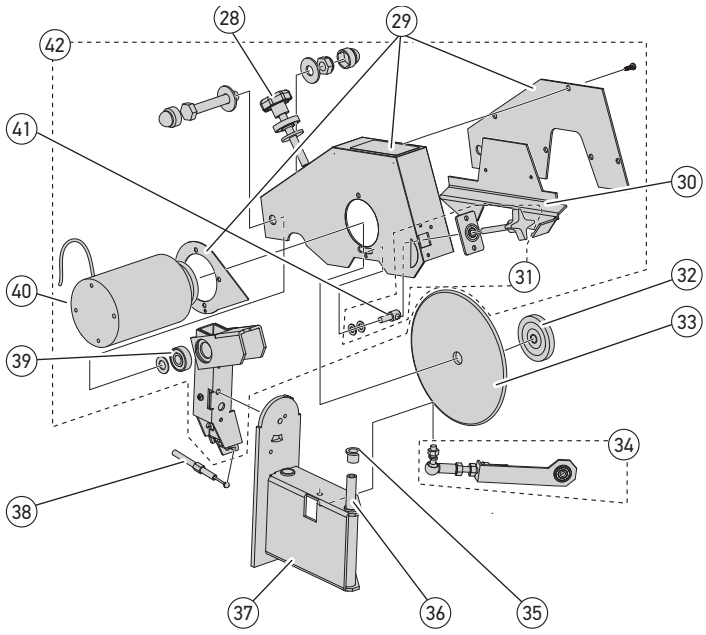

II

Shop Tools – Saw Chain Grinders

520-120 Bench

410-120 Bench / Wall

310-120 Mini Grinder

620-120 Hydraulic Assist

24549B Rivet Spinner

24548B Chain Breaker

Saw Chain Grinders Comparison Chart

620-120
Best

520-120
Better

410-120
Good

310-120
LIght-Duty

Features

	620-120 Best	520-120 Better	410-120 Good	310-120 LIght-Duty
Wheel size	5 3/4" (145 mm)	5 3/4" (145 mm)	5 3/4" (145 mm)	4 1/8" (105 mm)
Quantity of wheels included	3	3	3	2
Max chain pitch size	3/4"	.404"	.404"	.404"
One-way motor operation for safety	●	●	●	●
Dressing brick included	●	●	●	●
Quick-check template included	●	●	●	●
Top-plate angle settings	●	●	●	●
Built-in light	●	●	●	
Down angle settings	●	●	●	
Self-centering chain vise	●	●	●	●
Hands-free clamp vise operation	●			

Electrical Specification

Phase	Single	Single	Single	Single
Volts	120V-AC	120V-AC	120V-AC	120V-AC
Hertz	60	60	60	60
Amps	4.3	4.3	2.1	0.6
Watts	300	300	220	85
RPM	3400	3400	3150	4600
Direct-drive motor	Yes	Yes	Yes	Yes
Horsepower	0.4	0.4	0.29	0.11
One-way motor operation	Yes	Yes	Yes	Yes

II

620-120 Hydraulic Assist, Saw Chain Bench Grinder

The 620-Series Saw Chain Grinder features a hydraulic assist clamping vise, eliminating the need to manually tighten and loosen the vise. Providing the convenience and quality you need from a workhorse, high-volume chain grinder, the 620 delivers precision and accuracy on all chain pitches.

OREGON	Description	Product Code
620-120	Hydraulic Assist, Saw Chain Bench Grinder Single phase, direct-drive, one-way, 120V, 60Hz, 4.3A, 300W, 3400 RPM, 0.4 HP motor. Hydraulic assist chain clamping vise. Grinds 1/4", 3/8" Low Profile™, .325", 3/8", .404", & 3/4" pitch saw chain out of the box. Weight: 21 lbs., height: 19-1/2"	

	Included Accessories	For Pitch
OR534-18	(1) 5-3/4" Grinding Wheel 1/8" (3.2 mm) thickness	1/4", 3/8" Low Profile
OR534-316	(1) 5-3/4" Grinding Wheel 3/16" (4.8 mm) thickness	.325", 3/8", .404"
OR534-516	(1) 5-3/4" Grinding Wheel 5/16" (7.9 mm) thickness	3/4"
DB-2	Dressing Brick	
35596	Quick Template	

- Hydraulic assisted for hands-free automatic vise clamping
- All chain type vise capacity
- Wide clamping area
- Optimum grinding accuracy
- Clear markings for easy adjustments

No.	OREGON	Replacement Parts for 620-120 & 551462 (OBS)	Product Code
1	546949	Complete Vise Kit	
2	546945	Vise Adjustment Spring	
4	546948	Longer Pawl	
5	537412	Adjustment Knobs Kit	
6	546947	Hydraulic Assist Vise Support	
7	537398	E-Motor, Capacitor, Switch, Cables Kit – 120-Volt (Complete Electrical Assembly)	
8	109879	115-Volt On / Off Switch	
9	537413	Vise Adjustment Knob Kit	
10	537410	Scales Kit	
11	546952	Cylinder Protection	
12	37947	End Motor Cap	
14	537409	Motor Flange Kit (Outer & Inner)	
15	546951	Arm Support Assembly	
16	546946	Head Return Spring	
17	554651	Wheel Protector Shield	
18	105654	Shield Kit	
19	109248	Wheel Housing Metal Shield	
20	108196A	Light Socket E12 w/Wires – 115-Volt	
21	105538	Head Assembly Handle Kit	
22	546950	Complete Hydraulic Assembly	
–	112055	Light Bulb, 12-Pack (GE #15T7) – Not Shown	

620-120 Replacement Parts Diagram

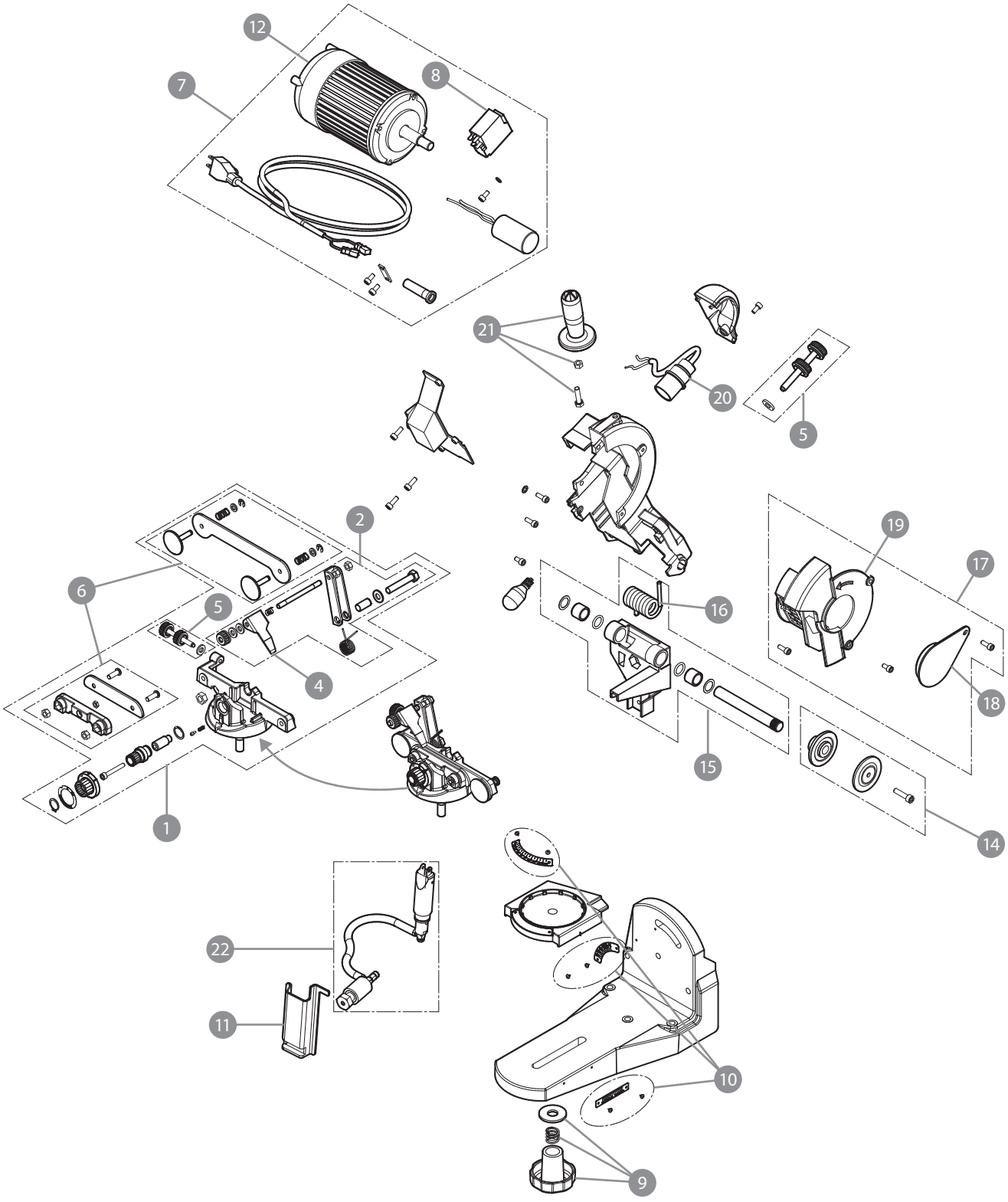

Shop Tools – Saw Chain Grinders

520-120 Saw Chain Bench Grinder

Our 520-Series Saw Chain Grinder combines premium quality and ease of use for high-volume sharpening. In addition to a sharp new design, the 520 features a newly engineered vise for improved performance on chains up to .404" pitch*.

OREGON	Description	Product Code
520-120	Saw Chain Bench Grinder Single phase, direct-drive, one-way, 120V, 60Hz, 4.3A, 300W, 3400 RPM, 0.4 HP motor. Manual chain-clamping vise. Grinds 1/4", 3/8" Low Profile™, .325", 3/8", & .404" pitch saw chain out of the box*. Weight: 20 lbs., height: 19-1/2"	

	Included Accessories	For Pitch
OR534-18	(1) 5-3/4" Grinding Wheel 1/8" (3.2 mm) thickness	1/4", 3/8" Low Profile
OR534-316	(1) 5-3/4" Grinding Wheel 3/16" (4.8 mm) thickness	.325", 3/8", .404"
OR534-14	(1) 5-3/4" Grinding Wheel 1/4" (6.4 mm) thickness	Depth gauge grind only
DB-2	Dressing Brick	
35596	Quick Template	

- Grinding wheel wear adjustment
- Indexing chain stop assembly
- Motor-head release button
- Longer, self-centering vise
- Forward/aft sliding vise
- Built-in light

*To grind 3/4" pitch saw chain on the 520-120, use Oregon 571887 (3/4" pitch vise adaptor kit) and OR534-516 (5-3/4" dia. grinding wheel). Both are available as separate accessories.

No.	OREGON	Replacement Parts for 520-120	Product Code
1	572119	Vise Assembly	
2	537411	Chain Stop Assembly	
3	522688	Chain Stop	
4	32677	Chain Stop (5-Pack)	
5	32681	Pawl Centering Spring (5-Pack)	
6	537412	Adjustment Knob Kit	
7	572202	Vise Handle Assembly	
8	572203	Vise Jaws	
9	537413	Vise Adjustment Knob Kit	
10	522685	Sliding Support	
11	537410	Scale Kit	
12	32678	Spring & Ball Kit	
14	522649	Arm Support Assembly	
15	522651	Arm Return Spring	
16	554651	Wheel Protector Shield	
17	105654	Wheel Protector Shield Kit	
18	109248	Wheel Housing Metal Shield	
19	537409	Flange Kit	
21	109879	On / Off Switch	
–	37947	Motor Cap	
23	537398	Complete Electrical Assembly	
24	108196A	115-Volt Light Socket	
25	105538	Head Assembly Handle Kit	
	112055	Light Bulb, 12-Pack (GE #15T7) - Not Shown	

520-120 Replacement Parts Diagram

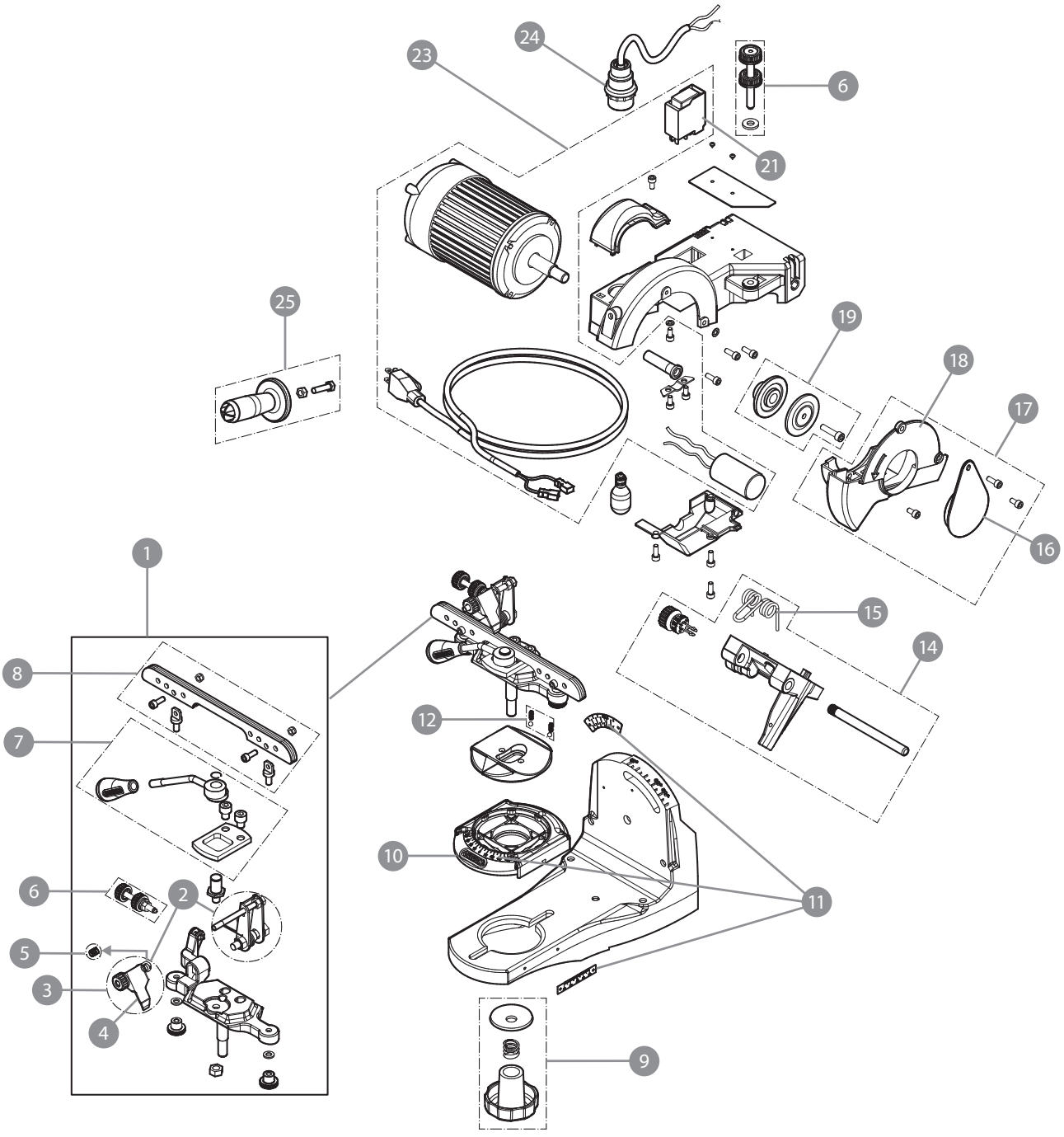

Shop Tools – Saw Chain Grinders

410-120 Mid-Sized Saw Chain Bench Grinder

Introducing the 410-Series, Mid-Size Grinder that provides the quality you can trust from Oregon® at an exceptional value. This grinder mounts to either a bench or wall and sharpens up to .404" pitch chain.

OREGON	Description	Product Code
410-120	Mid-Sized Saw Chain Bench Grinder Single phase, direct-drive, one-way, 120V, 60Hz, 1.2A, 140W, 3500 RPM, 0.4 HP motor. Manual chain-clamping vise. Grinds 1/4", 3/8" Low Profile™, .325", 3/8", & .404" pitch saw chain out of the box. Weight: 17 lbs., height: 16"	

	Included Accessories	For Pitch
OR534-18	5-3/4" Grinding Wheel 1/8" (3.2 mm) thickness	1/4", 3/8" Low Profile
OR534-316	5-3/4" Grinding Wheel 3/16" (4.8 mm) thickness	.325", 3/8", .404"
OR534-14	5-3/4" Grinding Wheel 1/4" (6.4 mm) thickness	Depth gauge grind only
DB-2	Dressing Brick	
35596	Quick Template	

- Built-in light
- Bench or wall mount
- One-way motor rotation for safe operation
- Easy-to-use adjustments

No.	OREGON	Replacement Parts for 410-120	Product Code
1	572119	Complete Vise Assembly	
2	537411	Chain Stop Vise Assembly	
3	522688	Chain Stop	
4	32677	Chain Stop (5-Pack)	
5	32681	Pawl Center Spring Kit (5-Pack)	
6	572522	Adjustment Knobs Kit	
7	572202	Lever Vise Assembly Chain Locking	
8	572203	Vise Jaws	
9	572524	Vise Locking Kit	
11	572525	Scales	
12	32678	Spring & Ball Kit (2-Pack)	
13	572523	E-Motor, Switch, Cable Kit	
14	572526	End Motor Cap	
15	109879	Switch	
16	572527	Spring Arm Return	
17	572529	Bracket Arm Support	
18	105538	Handle Kit	
19	537409	Motor Flange Kit	
20	572528	Plastic Shield	

410-120 Replacement Parts Diagram

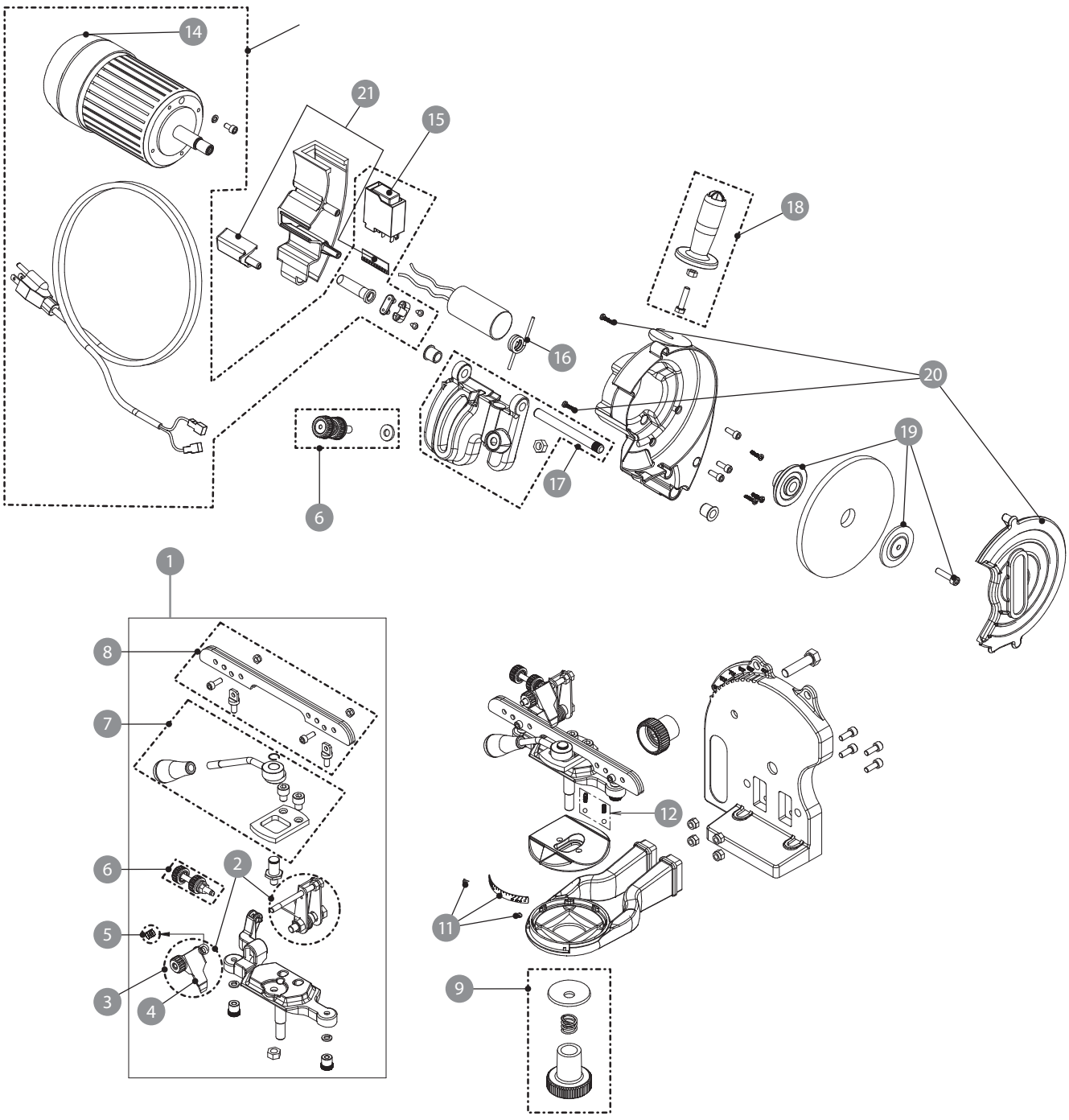

Shop Tools – Saw Chain Grinders

310-120 Light-Duty Saw Chain Bench Grinder

Designed with the occasional user in mind, the compact 310-Series, Consumer Bench Grinder delivers precision results in a very small space and sharpens up to .404" pitch chain.

OREGON	Description	Product Code
310-120	Light-Duty Saw Chain Bench Grinder Single phase, direct-drive, one-way, 120V, 60Hz, 0.6A, 85W, 4600 RPM, 0.11 HP motor. Manual chain clamping vise. Grinds 1/4", 3/8" Low Profile™, .325", 3/8", & .404" out of the box. Weight: 15 lbs., Height: 13"	
	Included Accessories	**For Pitch**
OR4125-18	(1) 4-1/8" Grinding Wheel 1/8" (3.2 mm) Thickness	1/4", 3/8" Low Profile
OR4125-316	(1) 4-1/8" Grinding Wheel 3/16" (4.8 mm) Thickness	.325", 3/8", .404"
DB-2	Dressing Brick	
35596	Quick Template	

- The compact alternative to full-size bench grinders that delivers precision results in a very small space.
- Includes two grinding wheels for sharpening 1/4", 3/8" Low Profile, .325", 3/8" pitch and .404" pitch chain
- Runs on standard 115-Volt power
- 2-year limited warranty

5-3/4" Grinding Wheels

These high-quality vitrified grinding wheels are specifically designed for use on full-size Oregon® grinders, part numbers: 511AX, 511A, 511A-BC, 510A, 109179, 551462, 620-120, 520-120, 410-120. Oregon wheels resist burning of the cutters and leave a precision finish. Individual display-ready packaging, or unpackaged. 7/8" shaft diameter.

OR534-316

OR534-316A

OREGON	5-3/4" Grinding Wheels	For Pitch	Product Code
OR534-18	1/8" (3.2 mm) Thickness	1/4", 3/8" Low Profile	
OR534-316	3/16" (4.8 mm) Thickness[1]	.325", 3/8", .404"	
OR534-14	1/4" (6.4 mm) Thickness	Depth gauge only	
OR534-516	5/16" (7.9 mm) Thickness	3/4"	
	In Display Package		
OR534-18A	1/8" (3.2 mm) Thickness	1/4", 3/8" low pro	
OR534-316A	3/16" (4.8 mm) Thickness[1]	.325", 3/8", .404"	
OR534-14A	1/4" (6.4 mm) Thickness	Depth gauge only	
OR534-516A	5/16" (7.9 mm) Thickness	3/4"	

[1] For 33, 34, 35 series, .325" pitch Oregon chain, use grinding wheel OR534-18

4-1/8" Grinding Wheels

These high-quality 4-1/8"-diameter grinding wheels leave a precision finish on saw chain and work with 310-120 and other Oregon® mini grinders. Available in individual display-ready packaging, or unpackaged. 7/8" shaft diameter.

OR4125-316

OR4125-316A

OREGON	4-1/8" Grinding Wheels	For Pitch	Product Code
OR4125-18	1/8" (3.2 mm) Thickness	1/4", 3/8" Low Profile™	
OR4125-316	3/16" (4.8 mm) Thickness[2]	.325", 3/8", .404"	
OR4125-14	1/4" (6.4 mm) Thickness	Depth gauge only	
	Display Package		
OR4125-18A	1/8" (3.2 mm) Thickness	1/4", 3/8" Low Profile	
OR4125-316A	3/16" (4.8 mm) Thickness[2]	.325", 3/8", .404"	
OR4125-14A	1/4" (6.4 mm) Thickness	Depth gauge only	

[2] For 33, 34, 35 series, .325" pitch Oregon chain, use grinding wheel OR4125-18

Wheel Dressing Tools

Dressing Brick and Quick Template work with both 5-3/4" and 4-1/8" Grinding Wheels

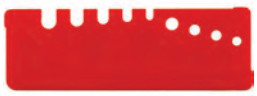

OREGON	Description	Product Code
DB-2	Dressing Brick	
35596	Quick Template	

II

Grinder Stand

A sturdy, long lasting stand that allows any of the Oregon bench-type chain grinders to be set up and used virtually anywhere. Height adjustable from 44" to 53.5" and compatible with all Oregon Bench Grinders. This stand breaks down for easy shipping and is simple to assemble.

OREGON	Description	Product Code
554532	Tripod Grinder Stand	

Compact Electric Rivet Spinner

Exclusively from Oregon®, a heavy-duty, bench-mounted Compact Electric Rivet Spinner that provides professional spin results while saving time and labor.

OREGON	Description	Product Code
552225	Compact Electric Rivet Spinner	
	Included Accessories	
545724	"A" Anvil and Spin Roll Set For 3/8" and .404" chain	
545725	"B" Anvil and Spin Roll Set For 90, 91, 1/4" and .325" chain	

- Professional results
- Compact bench-mounted design
- Unobstructed spin area
- Easy, continuous operation
- Fully equipped

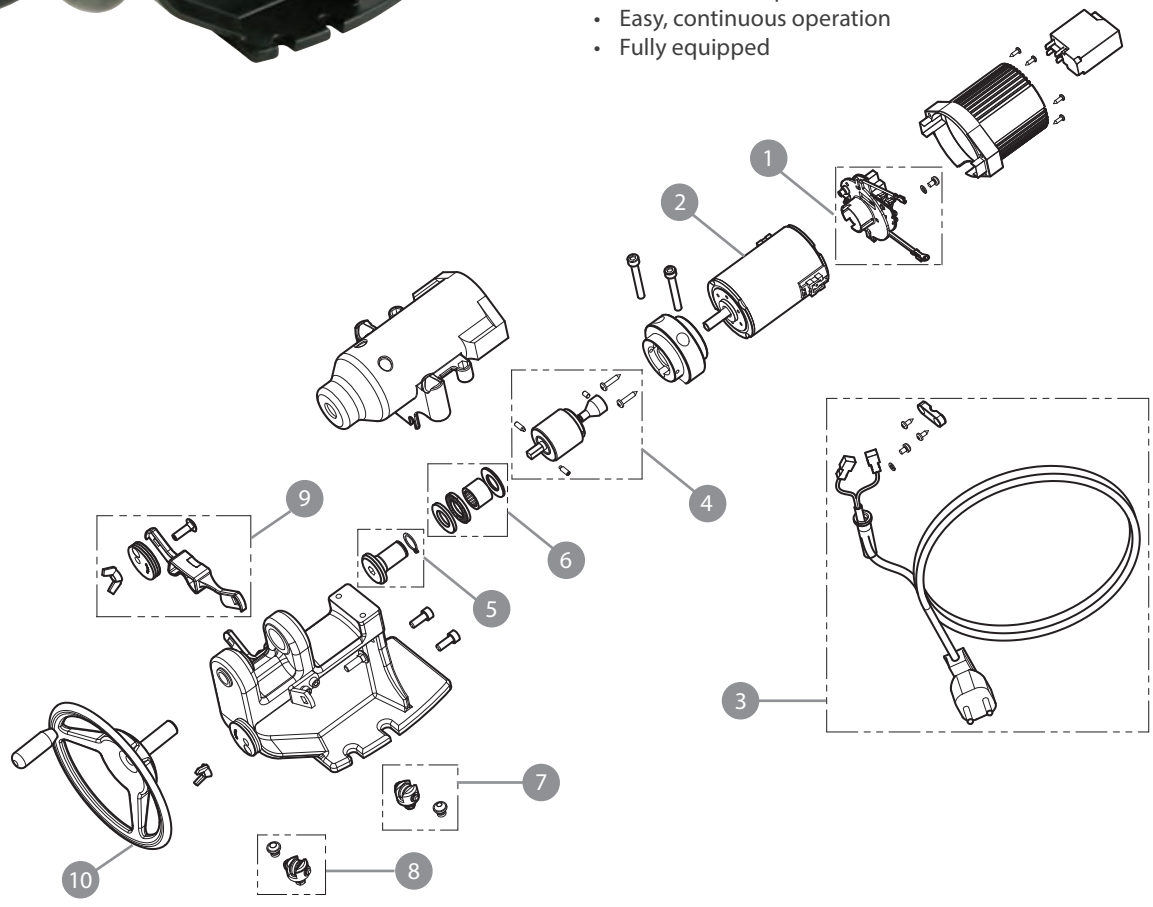

OREGON	No.	Replacement Parts for 552225	Product Code
545606	1	E-Card Power Rivet Spinner	
545608	2	E-Motor 120-Volt AC	
545720	3	120-Volt AC Feeding Cable	
545721	4	Planetary Gears Set	
545722	5	Threaded Bushing/w Thrust Washers	
545723	6	Thrust Needle Bearings Set	
545724	7	Spin Roll 3/8" – .404"	
545725	8	Spin Roll 1/4", 3/8" Low Profile, .325"	
545726	9	Chain Support Disc	
545727	10	Take-Up Thrust Wheel	

Bench Model Chain Breaker & Replacement Parts

A stand out in any shop, the Oregon® Bench Model Chain Breaker introduces a fresh look and new ergonomic handle to punch out any 1/4", 3/8" Low Profile™, .325", 3/8", or .404" pitch saw chain rivet.

OREGON	Description	Product Code
24548B	Bench Model Chain Breaker	
	Included Accessories	
38594	Standard Punch	
109644	Punch for 90-Series Chain (.043" gauge)	
111939	Anvil for 1/4", 3/8" Low Profile, .325", 3/8", & .404" Chain	

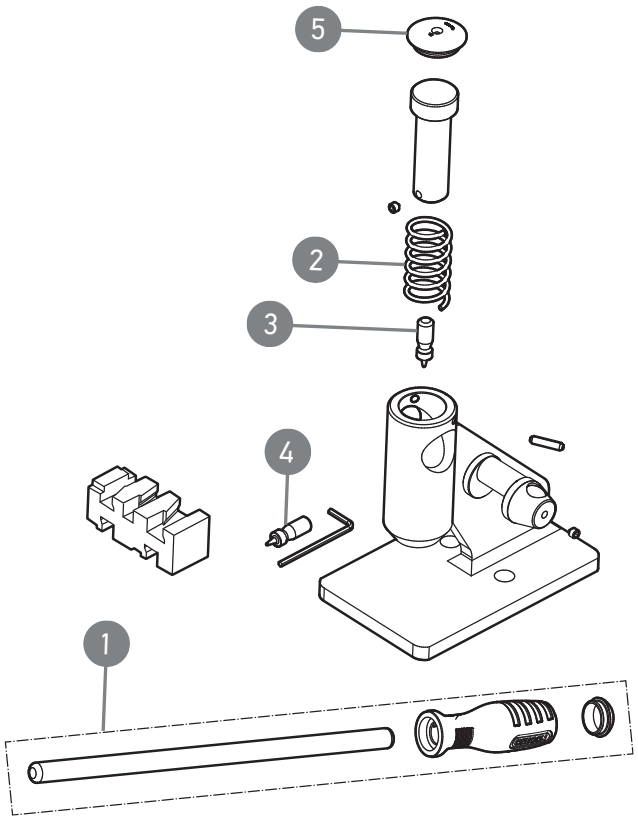

OREGON	No.	Replacement Parts for 24548B & 24548A (OBS)	Product Code
572121	1	Handle Assembly	
38593	2	Spring	
38594	3	Punch for 1/4", 3/8 Low Profile, .325", 3/8", & .404" Chain	
109644	4	.043" Punch (Not Shown) for 3/8" Low Profile Chain	
38595	5	Cap	
111939	6	5-Slot Anvil	
26870	–	Punch – Older, Cast-Style Breaker (Not Shown, P/N 24548)	

Bench Model Rivet Spinner

The new Bench Model Rivet Spinner features the same durable quality and performance you've come to expect from Oregon®, but features a new look and upgraded handle design. Produces consistent rivet spins and minimizes risk of chain breakage. Complete unit includes "A" & "B" anvils and "A" & "B" take-up handles that service up to .404" pitch chain.

OREGON	Description	Product Code
24549B*	Bench Model Rivet Spinner	
	Parts Included	
38597	"A" Anvil 3/8" & .404" Saw Chain	
38598	"B" Anvil 1/4", 3/8" Low Profile™, & .325" Saw Chain	
38599	"A" Take-Up Handle	
38600	"B" Take-Up Handle	

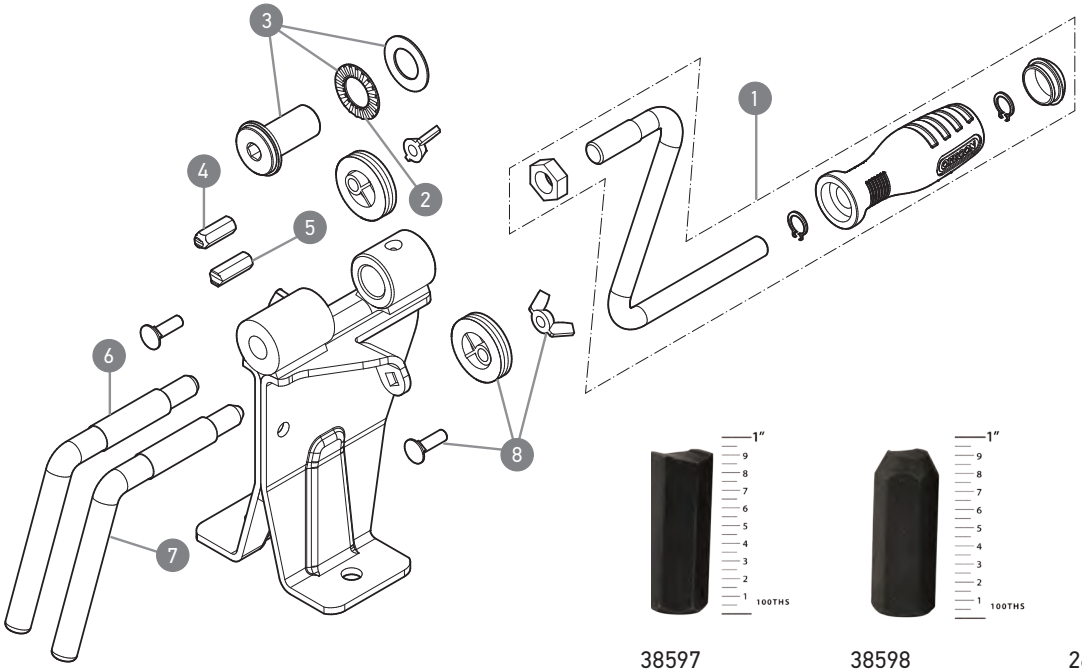

38597 38598 26889 26890

OREGON	No.	Replacement Parts for 24549B & 24549A (OBS)	Product Code
572120	1	Spinner Handle Assembly	
38605	2	Thrust Bearing	
38604	3	Sleeve	
38597	4	"A" Anvil for 3/8" & .404" Pitch	
38598	5	"B" Anvil for 1/4", 3/8" Low Profile, & .325" Pitch	
38599	6	"A" Take-Up Handle for 3/8" & .404" Pitch	
38600	7	"B" Take-Up Handle for 1/4", 3/8" Low Profile, & .325" Pitch	
38603	8	Chain Support Disc	
26889		"A" Anvil – Older, Cast Style Spinner (P/N 24549) for 3/8" & .404" Pitch	
26890		"C" Anvil – Older, Cast Style Spinner (P/N 24549) for 1/4", 3/8" Low Profile, & .325" Pitch	

Heavy-Duty Chain Breaker & Bar Nose Rivet Driver

Another heavy-weight champion of service tools from Oregon®. This multi-purpose tool breaks all chain pitches, including 3/4", and can also be used to drive out bar nose rivets, including the nose rivets on big 3/4" pitch harvester bars. Heavy-duty materials and top-quality components are used throughout, and replacement parts are available separately to keep this ultimate shop tool in service for a long time. Punches for all chain pitches are included. Anvil for 3/4" pitch chain must be purchased separately.

OREGON	Description	Product Code
24548-si	Heavy-Duty Chain Breaker	
	Parts Included	
110436si	Punch Holder	
38594	Standard Chain Punch for Chain Pitches: 1/4", 3/8 Low Profile™, .325", 3/8", & .404"	
110438si	3/4" Pitch Chain Punch	
102623si	Bar Nose Rivet Punch	
111939	Breaker Anvil	
	Optional Components	
505033	Breaker Anvil for Harvester Bar Noses	
25049	Breaker Anvil, 3/4" Pitch Chain	

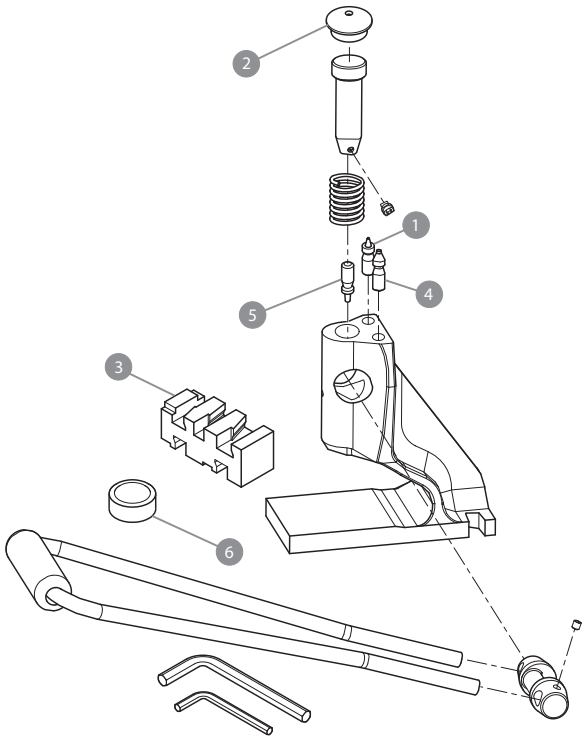

OREGON	No.	Replacement Parts for 24548-si	Product Code
38594	1	Standard Chain Punch for Chain Pitches: 1/4", 3/8 Low Profile, .325", 3/8", & .404"	
38595	2	Cap	
111939	3	5-Slot Breaker Anvil	
110438si	4	3/4" Pitch Chain Punch	
102623si	5	Bar Nose Rivet Punch	
505033	6	Breaker Anvil for Harvester Bar Noses	

Heavy-Duty Rivet Spinner

The heavy-weight champion of hand-operated rivet spinners. Designed to meet all rivet spinning needs. Spins all chain rivets up to .404" pitch, and adapts easily for spinning 3/4" rivets when used with the 3/4" pitch adapter kit below.

OREGON	Description	Product Code
24549-si	Heavy-Duty Rivet Spinner – Metric	
	Parts Included	
38597	"A" Anvil for 3/8" and .404" Saw Chain (38597 Fits Both SAE & Metric Spinners)	
38598	"B" Anvil for 1/4", 3/8" Low Profile™, & .325" Saw Chain (38598 Fits Both SAE and Metric Spinners)	
108780si	"A" Take-Up Handle	
108781si	"B" Take-Up Handle	

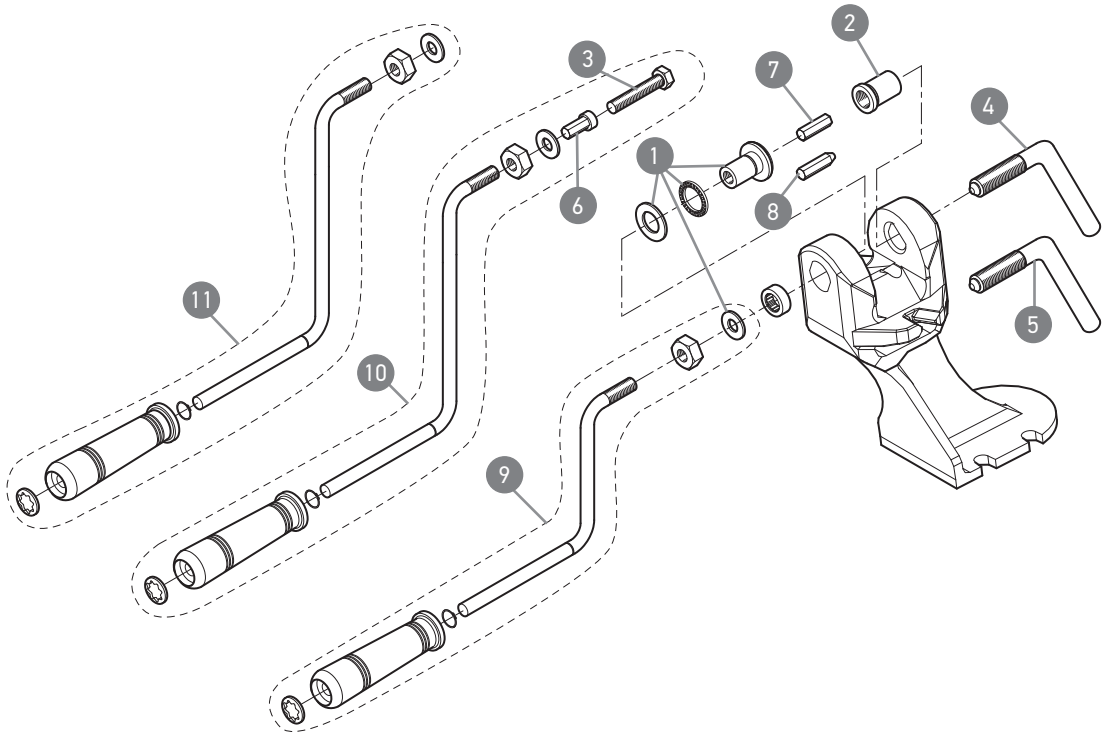

OREGON	No.	Replacement Parts for 24549-si (Metric)	Product Code
108777si	1	Anvil Drive Bushing	
108778si	2	Threaded Bushing	
108789si	3	Take-Up Bolt Hex End	
108780si	4	Take-Up Handle (A) for 3/8" & .404" Saw Chain	
108781si	5	Take-Up Handle (B) for 1/4", 3/8" Low Profile™, &.325" Saw Chain	
108790si	6	3/4" Pitch Spinner Anvil	
38597	7	Spinner Anvil (A) for 3/8" & .404" Saw Chain	
38598	8	Spinner Anvil (B) for 1/4", 3/8" Low Profile, &.325" Saw Chain	
108779si	9	Handle Assembly	
108742si	10	3/4" Pitch Adapter Kit	
108788si	11	Extra-Long Handle	

3/4" Pitch Rivet Spinner Adaptor Kit

Enables spinning of 3/4" pitch chain rivets on the Oregon® Bench Model Rivet Spinner P/N 24549A and 24549B.

OREGON	Description	Product Code
100871	3/4" Pitch Rivet Spinner Adaptor Kit, Includes: (1) Anvil, (1) Grease Gun, (1) Spinner Handle Adaptor	

Heavy-Duty Rivet Spinner – 3/4" Pitch Rivet Spinner Adaptor Kits

Enables spinning of 3/4" pitch chain rivets on the Heavy-Duty Rivet Spinners, P/Ns 24549-s (an obsoleted SAE Rivet Spinner) and 24549-si. This metric adaptor kit includes: one anvil, one take-up bolt, and one extra long handle.

OREGON	Description	Product Code
108742si	3/4" Pitch Rivet Spinner Adaptor Kit – Metric	

Adjustable Anvil

For use with 90, 91, 1/4", 3/8" Low Profile™, .325", 3/8"and .404" pitch chains. This universal tool securely holds all brands and chain pitches up to .404".

OREGON	Description	Product Code
105530	Adjustable Anvil for Use with 1/4", 3/8" Low Profile, .325", 3/8", & .404" Saw Chain	

Chain Scale

This reference chart provides a quick link count for 1/4", 3/8" Low Profile .325", 3/8", .404", and 3/4" pitch chains. Shipped in three sections, this time-saver can be customized to meet various lengths of chain.

OREGON	Description	Product Code
533129	Quick-Reference Chain Scale	

Pocket Chain Breaker

39470

- Easy to use
- Breaks 90, 91, 1/4", 3/8" Low Profile, .325", 3/8", & .404" pitch chains

OREGON	Description	Product Code
39472	Anvil and Punch Assembly for 1/4", 3/8" Low Profile, .325", 3/8", & .404" Saw Chain – Display Pack	
39470	Punch, for Assembly 39472	

109182 Power Rivet Spinner (Obsolete)

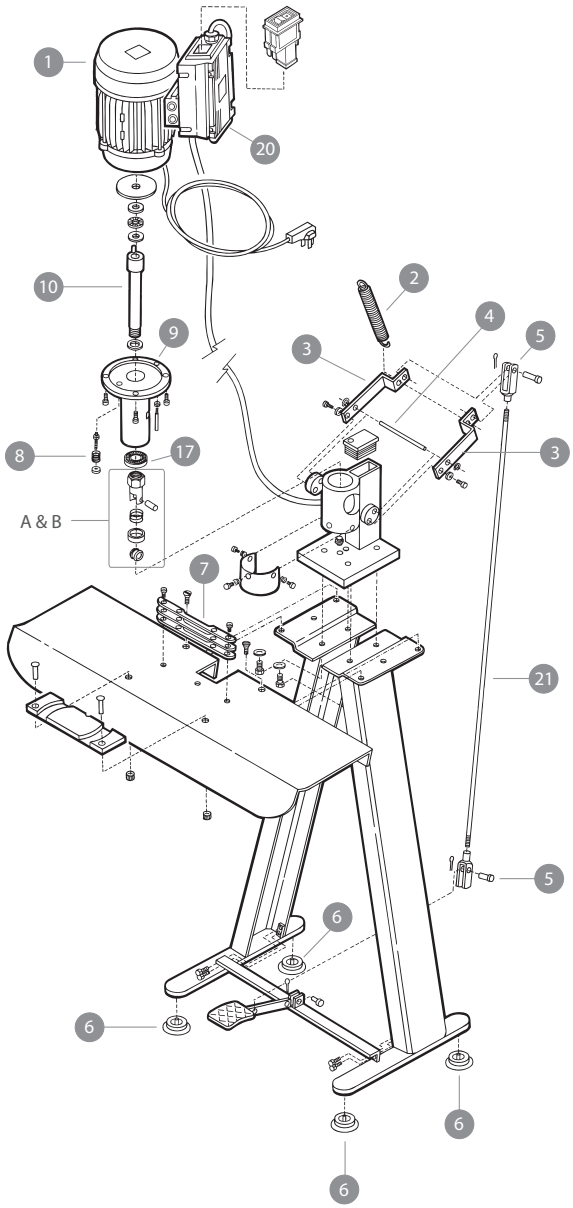

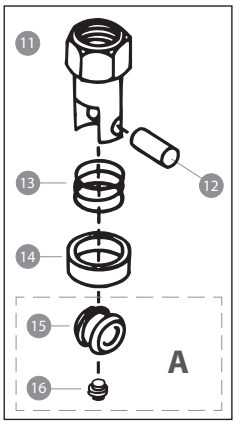

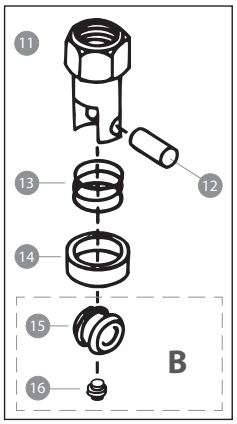

OREGON	No.	Description	Product Code
	2	Spring, Actuation Lever Return	
	3	Bracket, Actuation Mechanism	
109276	4	Shaft, Actuation Mechanism	
	5	Clevis Fitting Kit	
109280	7	Guard Plate, Chain Position	
	9	Housing, Actuation Shaft	
	10	Shaft, Tool Actuation	
	17	Shaft Bearing, Lower	
109879	20	Power Switch	
		Kits for 3/8" & .404" Pitch	
109284	A	15A, 16A, 11, 12, 13, & 14	
109281	15A	Rivet Tool, Rotating Position	
111039	16A	Rivet Tool, Stationary Position	
112255	B	15B, 16B, 11, 12, 13, & 14	
		Kits for 1/4", 3/8" Low Profile™ & .325" Pitch	
109281	15B	Rivet Tool, Rotating Position	
111039	16B	Rivet Tool, Stationary Position	
	12	Clevis Pin, Rivet Tool	
	13	Tension Spring, Rivet Tool, Rotating	

Part numbers printed in *red* have been obsoleted. Contact your authorized Oregon® distributor for availability.

109179 Bench Grinder with Hydraulic Assist (Obsolete)

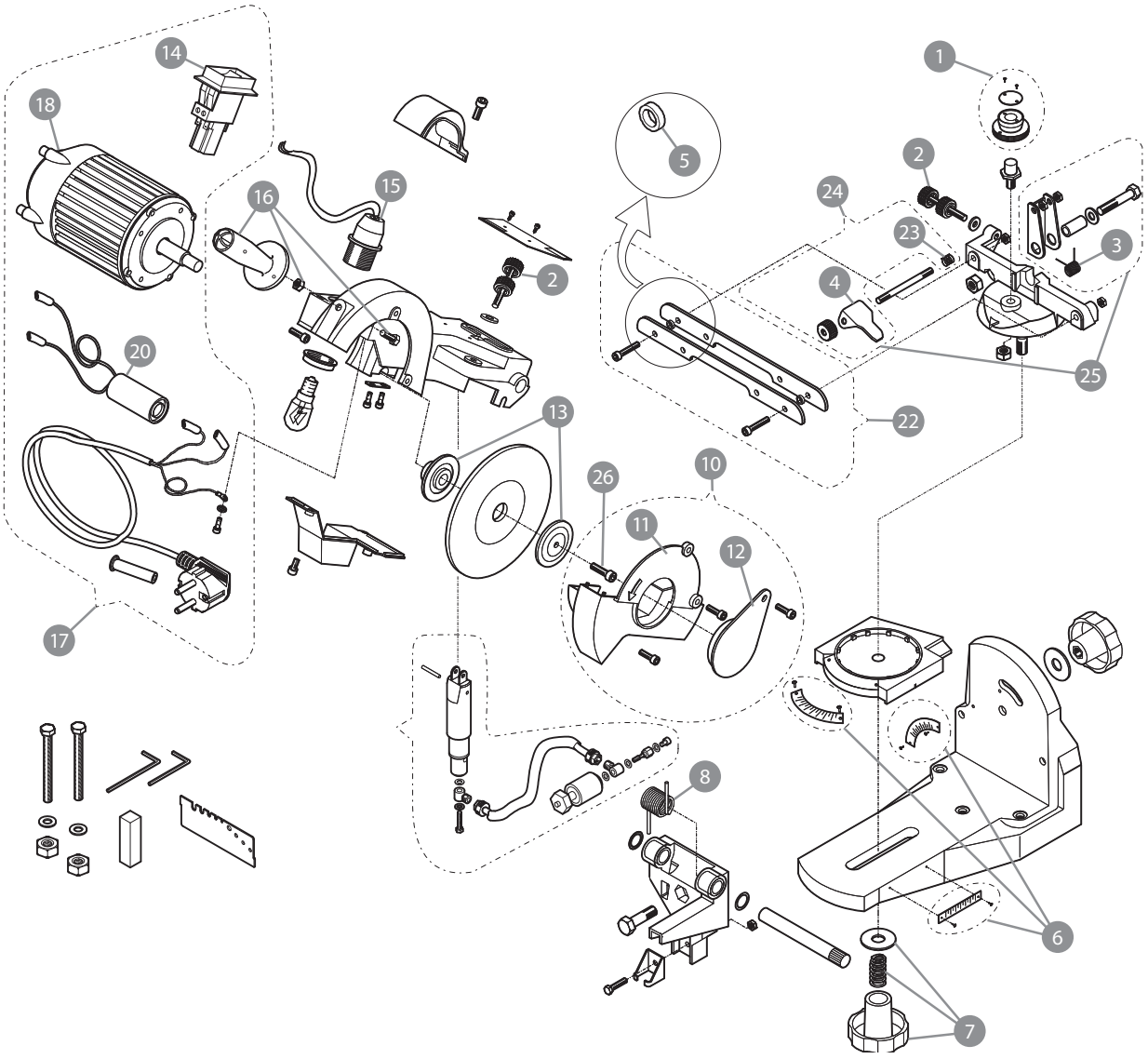

OREGON	No.	Description	Product Code
109247	1	Adjustment Cam, Vise Position	
537412	2	Adjustment Knob Kit	
32677	4	Chain Stop (5-Pack) (p/n 522688, Chain Stop – Single)	
35610	5	Chain Vise Spacers (2-Packs)	
537410	6	Scales Kit	
537413	7	Vise Adjustment Knob Kit	
110703	8	Spring, Arm Return	
554651	10	Shield Wheel Protector	
109248	11	Metal Shield, Wheel Housing	
105654	12	Plastic Shield Kit	
537409	13	Motor Flange Kit (Outer & Inner)	

OREGON	No.	Description	Product Code
109879	14	Switch 115-Volt, On / Off (New Type)	
108196A	15	Light Socket E12 w/ Wires –120-Volt	
105538	16	Handle Kit, Head Assembly	
537398	17	E-Motor, Capacitor, Switch, Cables Kit – 120-Volt	
37947	18	End Motor Cap	
534549	22	Vise Jaws Assembly Kit	
32681	23	Pawl Center Spring Kit (5-Pack)	
522688	24	Chain Stop Single (p/n 32677, 5-Pack)	
537411	25	Chain Stop Assembly Kit	
35584	26	Screw	

511AX Bench Grinder (Obsolete)

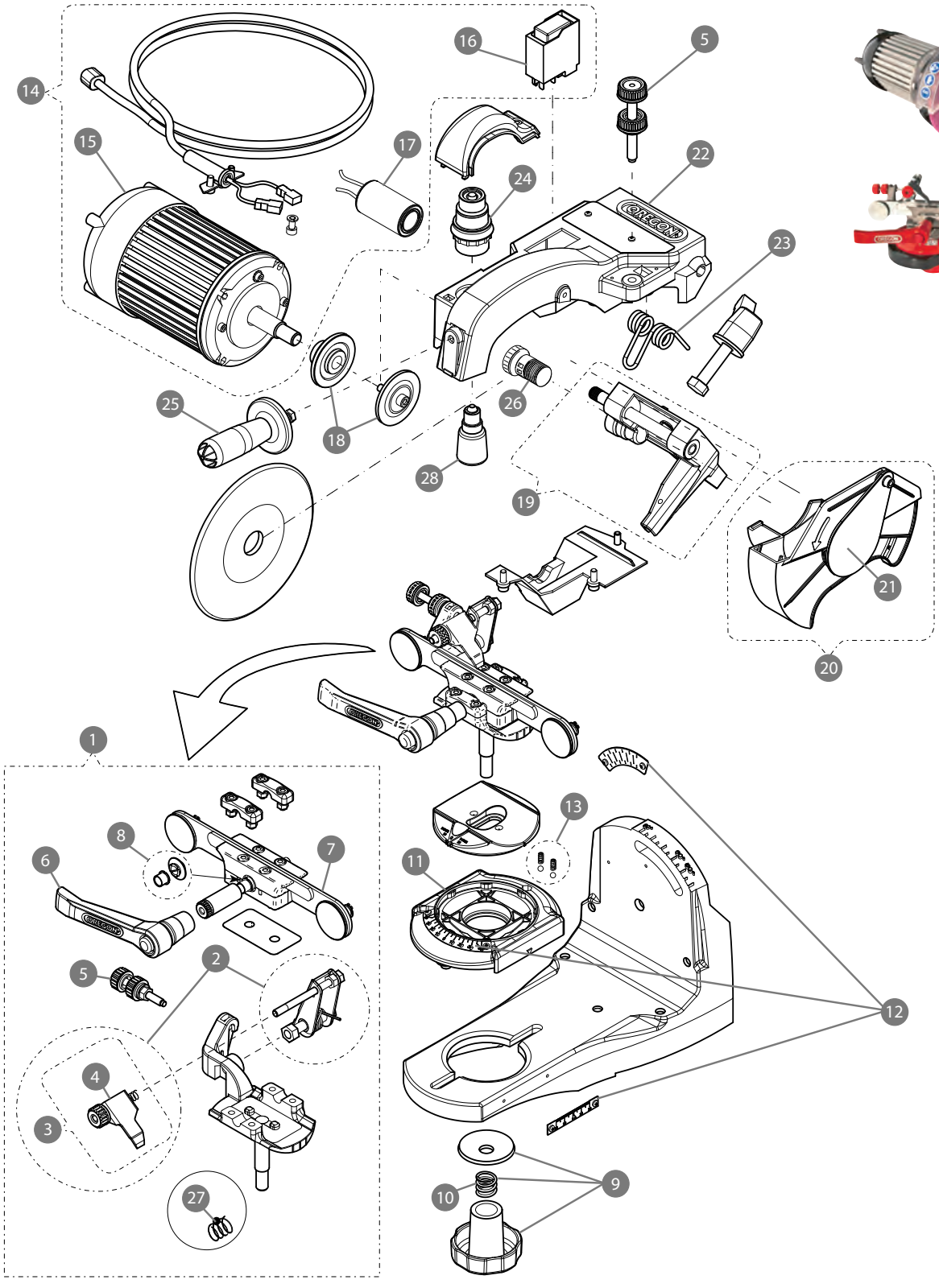

511AX Bench Grinder (Obsolete)

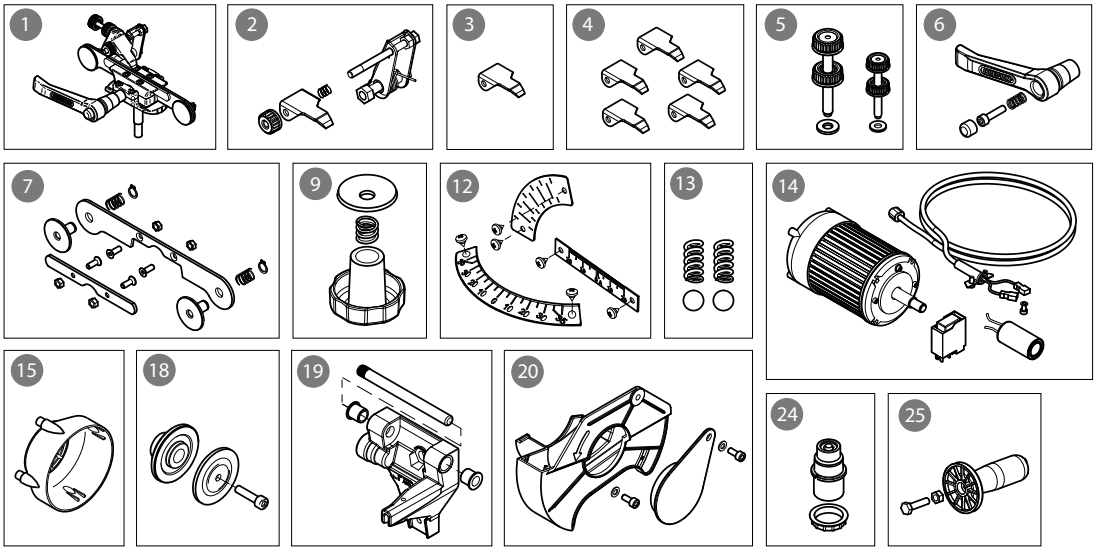

OREGON	No.	Description	Product Code
526265	1	Complete Vise Assembly	
537411	2	Chain Hold Kit 511AX	
522688	3	Chain Stop Single (p/n 32677, 5-Pack)	
32677	4	Chain Stop (5-Pack)	
537412	5	Adjustment Knobs, Kit	
522689	6	Lever, 511AX Vise Assembly Chain Locking	
526267	7	Vise Jaws, 511AX Vise Assembly	
522691	8	Vise Bushing, 511AX Vise Assembly	
537413	9	Vise Locking Kit	
522685	11	Sliding Support 511AX	
537410	12	511AX Scales Kit	
32678	13	Spring and Ball Kit	
537398	14	E-Motor, Capacitor, Switch, Cables Kit	
37947	15	End Motor Cap	
109879	16	Switch 115-Volt (New Type)	
537409	18	Motor Flange Kit (Outer & Inner)	
522649	19	Bracket, 511AX Arm Support	
105654	20	Shield Wheel Protector	
522692	21	Shield Kit	
522650	22	Arm, 511AX Complete	
522651	23	Spring, 511AX Arm Return	
108196A	24	Light Socket E12 w/ Wires	
105538	25	Handle Kit	
522670	26	Safety Pin, 511AX	
32681	27	Pawl Center Spring Kit (5-Pack)	
112055	28	Light Bulb, 12-Pack (GE #15T7)	

511A Bench Grinder (Obsolete)

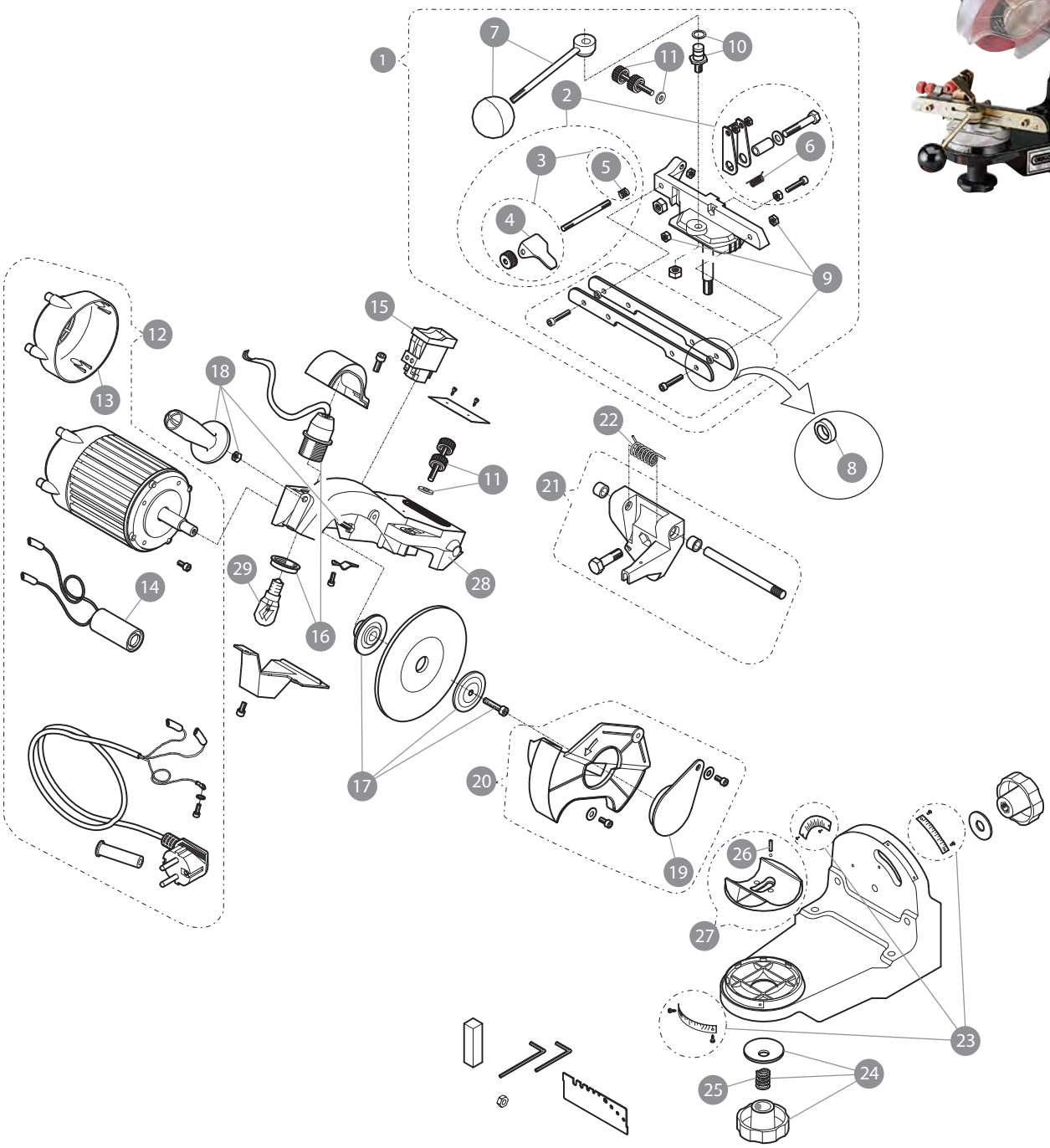

511A Bench Grinder (Obsolete)

OREGON	No.	Description	Product Code
110597	1	Complete Vise Assembly	
537411	2	Chain Hold Kit 511AX	
32677	3	Chain Stop (5-Pack)	
522688	4	Chain Stop Single (p/n 32677, 5-Pack)	
32681	5	Pawl Center Spring Kit (5-Pack)	
534550	7	Vise Handle	
35610	8	Chain Vise Spacers	
534549	9	Vise Jaws	
37951	10	Cam Post	
537412	11	Adjustment Knobs, Kit	
37947	13	End Motor Cap	
109879	15	Switch 115-Volt (New Type)	
108196A	16	Light Socket E12 w/ Wires	
537409	17	Motor Flange Kit (Outer & Inner)	
105538	18	Handle Kit	
105654	19	Shield Kit	
522692	20	Shield Wheel Protector	
522649	21	Bracket, 511AX Arm Support (from 2008)	
35589	22	Spring	
537410	23	511AX Scales Kit	
537413	24	Vise Locking Kit	
32678	26	Spring & Ball Kit	
104874	27	Flange & Nut	
522650	28	Arm, 511AX Complete	
112055	29	Light Bulb, 12-Pack (GE #15T7)	

Shop Tools – Replacement Parts for Obsolete Tools

510A Bench Grinders (Obsolete)

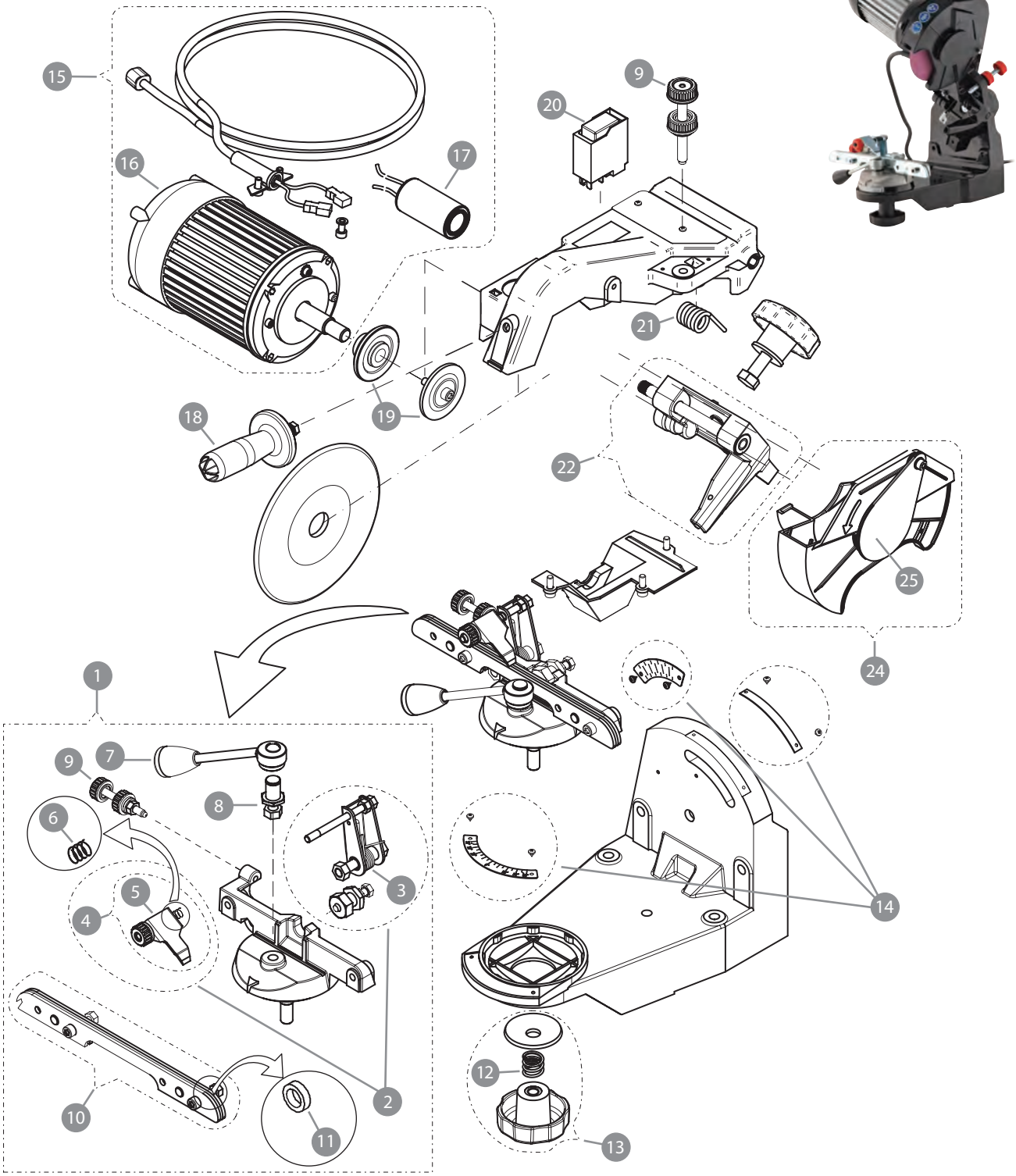

II

510A Bench Grinders (Obsolete)

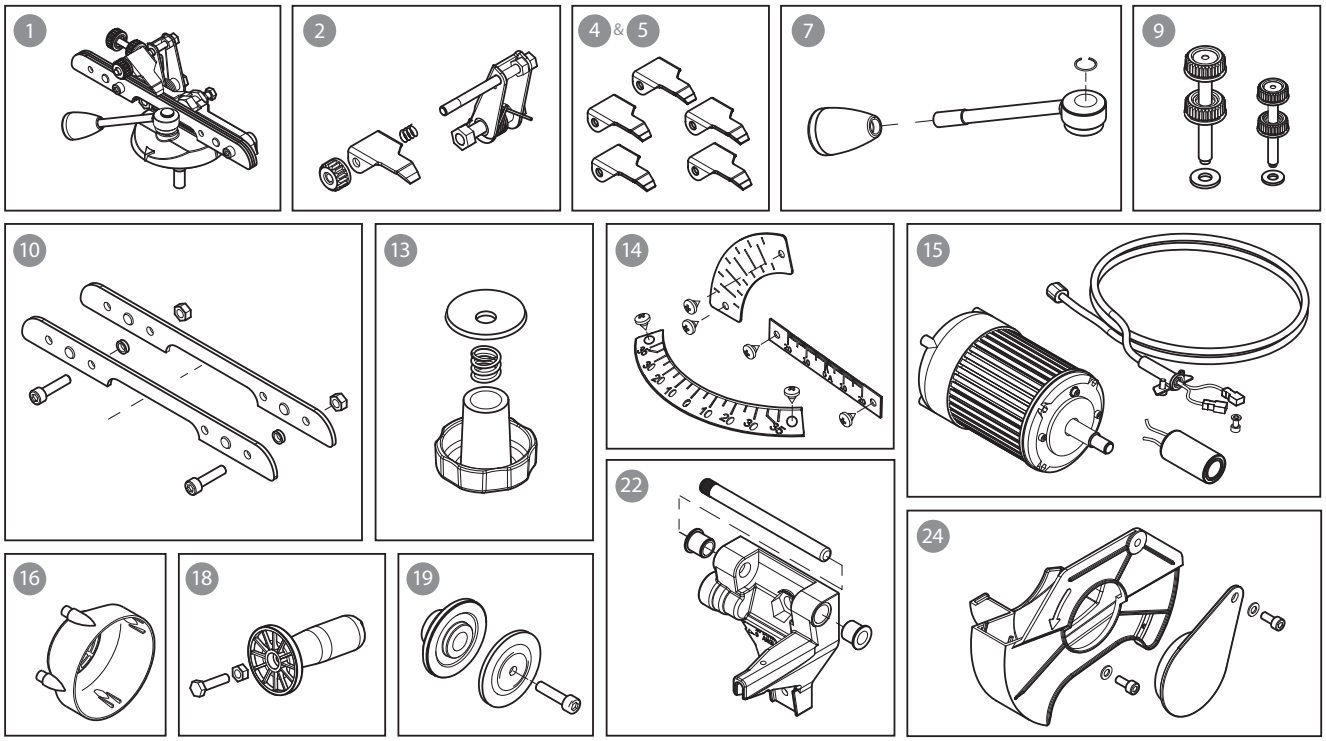

OREGON	No.	Description	Product Code
534477	1	Vise Assembly	
537411	2	Chain Hold Kit 511AX	
522688	4	Chain Stop Single (p/n 32677, 5-Pack)	
32677	5	Chain Stop (5-Pack)	
32681	6	Pawl Center Spring Kit (5-Pack)	
534550	7	Vise Handle	
37951	8	Cam Post	
537412	9	Adjustment Knobs, Kit	
534549	10	Vise Jaws	
35610	11	Chain Vise Spacers	
537413	13	Vise Locking Kit	
537410	14	511AX Scales Kit	
37947	16	End Motor Cap	
105538	18	Handle Kit	
537409	19	Motor Flange Kit (Outer & Inner)	
109879	20	Switch, 115-Volt (New Type)	
35589	21	Spring	
522649	22	Bracket, 511AX Arm Support	
105654	24	Shield Wheel Protector	
522692	25	Shield Kit	

108181 115-Volt Bench-Mounted Mini Grinder (Obsolete)

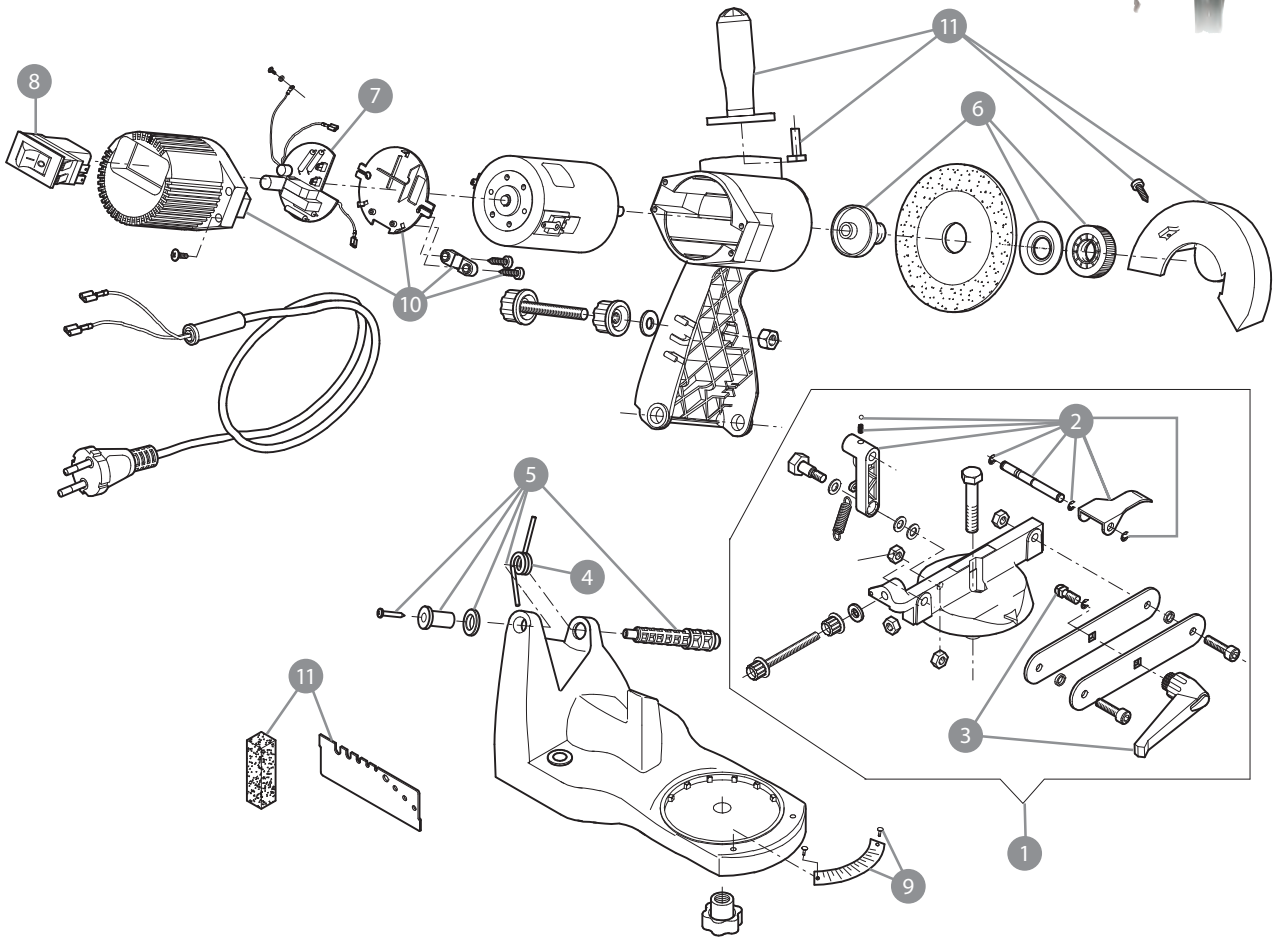

OREGON	No.	Description	Product Code
108476	1	Complete Vise	
110579	2	Chain Stop Retrofit Kit	
109171	3	Vise Position / Tension Adjustment Knob	
109175	4	Return Spring, Grind Lever	
537888	5	Spring Arm Return Set	
111941	6	Aluminum Arbor Retrofit Kit	
519971	7	120-Volt/230-Volt Electric Cardboard	
519970	8	120-Volt Switch	
108468	9	Vise Screws & Plate Kit	
	10	Cover & Holding Plate Kit	
554650	11	Equipment Kit	

Bar-Mounted Mini Grinders (Obsolete)

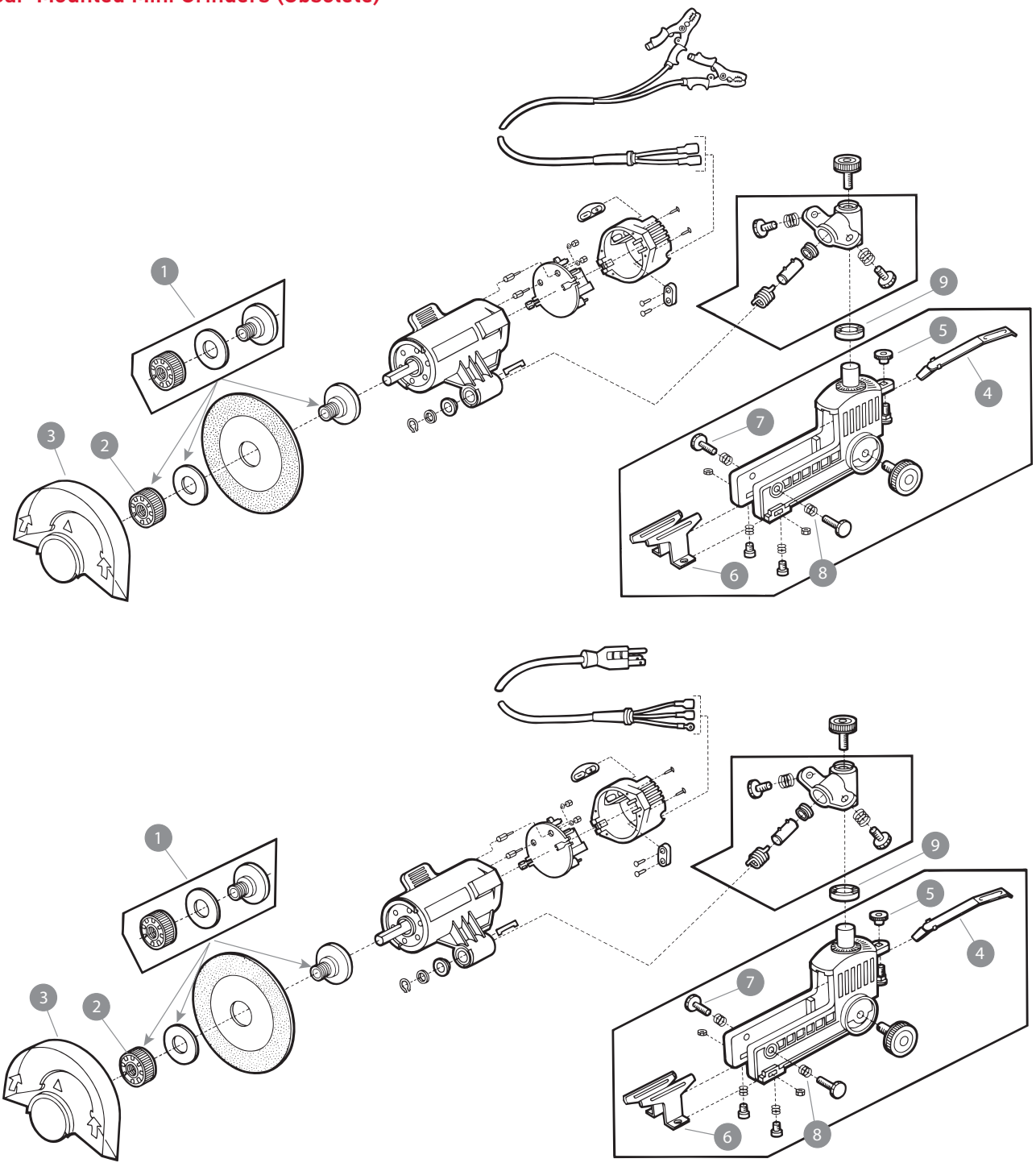

OREGON	No.	Description	Product Code
111941	1	Aluminum Arbor Retrofit Kit	
109170	3	Plastic Guard / Shield	
108206	4	Stop Spring	
108207	5	Mount Adjustment Nut, Stop Spring	

OREGON	No.	Description	Product Code
108208	6	Jaw Plate	
108209	7	Adjustment Knob, Jaw Plate / Stop	
108210	8	Tension Spring, Jaw Plate / Stop	

Shop Tools – Lawn Mower Blade Grinders

Model 760, Lawn Mower Blade Belt Grinder

Fastest blade sharpener on the market. Ceramic belts reduces heat generation. Includes chainsaw bar grinding attachment.

OREGON	Description	Product Code
88-100*	1-1/2" X 60" Belt Grinder with Pedestal (88-115)	
88-101*	1-1/2" X 60" Belt Grinder	
	Replacement Parts (pictured on next page)	
88-111	1-1/2" X 60" 40 Grit Ceramic Belt for 760	
88-112	1-1/2" X 60" 120 Grit Belt for 760	
88-113*	Dust Scoop for 760	
575377	Motor, fits 88-100 & 88-101 Belt Grinders	

- 1-1/2 HP dual capacitor induction motor
- 8000 SFPM — approximately 90 MPH
- 115V or 220V – 1 phase
- 90 duro serrated contact wheel
- Uses premium ceramic 1-1/2" x 60" coated abrasive belts
- Sharpens blades in seconds
- **Drop ship only direct to dealers (USA)**
- **Drop ship only direct to distributors (CAN)**

II

Model x400, Lawn Mower Blade Belt Grinder

Sharpen blades in seconds. Easily sharpens flat blades, mulching blades, bush hog blades, as well as chipper blades.

OREGON	Description	Product Code
88-102*	1-1/2" X 48" Belt Grinder w/Pedestal (88-115)	
88-103*	1-1/2" X 48" Belt Grinder	
	Replacement Parts (pictured on next page)	
88-109	1-1/2" X 48" 40 Grit Ceramic Belt for X400	
88-110	1-1/2" X 48" 120 Grit Belt for X400	
575378	Motor, fits 88-102 & 88-103 Belt Grinders	

- 1 HP motor
- 8000 SFPM — approximately 90 MPH
- 115V or 220V – 1 phase
- 90 duro serrated contact wheel
- Uses premium ceramic 1-1/2" x 48" coated abrasive belts
- Sharpens blades in seconds
- **Drop ship only direct to dealers (USA)**
- **Drop ship only direct to distributors (CAN)**

NOTE: the x400 is designed for sharpening applications of 20 or less blades between grinder "resting" or motor cool-down periods. For sharpening applications of 20 or more blades, Oregon recommends upgrading to the 760.

* USA orders drop ship direct to dealers (in the lower 48 states only); Canadian orders drop ship direct to distributors only

Blade Belt Grinder — Replacement Parts & Consumable Accessories

OREGON	OEM No.	Description	Product Code
88-104*	702-S-90	Serrated Contact Wheel	
88-114*	760T-2	Tool Tray for 760 / X400	
88-115*	01	Pedestal for 760 / X400	
88-116*		Chainsaw Bar Attachment for 760/X400	
88-118*		Blade Table Assembly Kit Includes Table Assembly, Flail Blade Tube, & 90 Duro Serrated Contact Wheel	
75-430	953	V-Belt Motor to Contact Wheel for 760/ X400	

* USA orders drop ship direct to dealers (in the lower 48 states only);
Canadian orders drop ship direct to distributors only

88-104

88-113

88-116

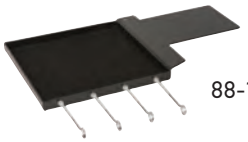
88-114

88-109, 88-110
88-111, & 88-112

88-115

88-021 Heavy-Duty Blade Grinder & Accessories

88-021 **Heavy-Duty Blade Grinder**
A 1-1/2 HP, 1750 RPM motor will sharpen extended cut blades (up to 10" of sharpened edge) and a reversing switch allows for grinding in both directions.
Adjustable light included
Safety switch
Easy height adjustment
12" heavy-duty stone
More HP, more power
Includes Oregon® 88-022 grinding stone
Use with Oregon 88-022, 88-038, or 88-039 replacement grinding stone

Unit requires 29 Amps on startup

88-022 **Grinding Stone, 12" Blue**
12" blue stone for heavy-duty blade grinder
Use with Oregon 88-021 blade grinder
OD: 12", thickness: 1", bore: 7/8"
Rating: 2200 max RPM
36 grit

Shorter life, faster grind

88-038 **Grinding Stone, 12" Red**
12" hardened red stone for heavy-duty blade grinder
Use with Oregon 88-021 blade grinder
OD: 12", thickness: 1", bore: 7/8"
Rating: 2200 max RPM
46 grit

Longer life, slightly slower grind

88-039 **Grinding Stone, 12" Red**
12" hardened red stone for heavy-duty blade grinder
Use with Oregon 88-021 blade grinder
OD: 12", thickness: 1", bore: 7/8"
Rating: 2200 max RPM
30 grit

Shorter life, faster grind

Shop Tools – Lawn Mower Blade Grinders

OREGON	Description	Product Code

Heavy-Duty Blade Grinders & Accessories

88-035 **Mulching Blade Adaptor**
Fits Oregon® 88-021 blade grinder

88-029 **Grit Collector**
Fits Oregon 88-021 blade grinder

88-016 **Adapter Plate Kit**
Adapter plate kit for Oregon 88-021 blade grinder

88-018 **Heavy-Duty Blade Grinder**
A 1 HP, 1750 RPM motor will sharpen extended cut blades (up to 9" of sharpened edge and a reversing switch allows grinding in both directions
Adjustable light included
Safety switch
Easy height adjustment
10" heavy-duty grinding stone
Includes Oregon 88-049 grinding stone

88-049 **Grinding Stone, 10" Blue**
Use with Oregon 88-031 & 88-018 blade grinders
OD: 10", thickness: 1" bore: 3/4"
Replaces Oregon 88-041
Rating: 2200 max RPM
36 grit

88-043 **Grinding Stone, 10" Red**
Use with Oregon 88-018 blade grinder
OD: 10", thickness: 1", bore: 3/4"
Rating: 2200 max RPM
46 grit

88-015 **Universal Mulching Blade Adapter**
Use with Oregon 88-018 blade grinder

88-037 **Grit Collector**
Use with Oregon 88-023 & 88-018 blade grinders

II

OREGON	Description	Product Code

Blade Grinders & Accessories

88-023 **Blade Grinder with Light**
A 1/2 HP standard-duty, 1750 RPM motor will sharpen up to 6" cutting edge and a reversing switch allows grinding in both directions
8" hardened red grinding stone
Easy-to-turn rotary adjusting handle
Easy-adjust knobs on height adjustment
Rubber feet reduce vibrations
Adjustable light included
Includes Oregon® 88-047 grinding stone
Use with Oregon 88-047 or 88-048 grinding stones
(replaces Oregon 88-020 blade grinder)

88-025 **Blade Grinder**
A 1/3 HP, single direction, standard-duty, 1750 RPM non-reversing motor will sharpen any length cutting edge (right-hand cut blades only)
Safety switch
Easy height adjustment
No light
Uses 8" Oregon 88-047 or 88-048 grinding stones

88-047 **Grinding Stone, 8" Red**
Use with Oregon 88-019, 88-023, & 88-025 blade grinders
OD: 8", thickness: 1", bore: 5/8"
Rating: 2200 max RPM
36 grit
Longer life, slightly slower grind

88-048 **Grinding Stone, 8" Blue**
Use with Oregon 88-019, 88-023, & 88-025 blade grinders
OD: 8", thickness: 1", bore: 5/8"
Replaces Oregon 88-044
Rating: 2200 max RPM
30 grit
Shorter life, faster grind

88-037 **Grit Collector**
Use with Oregon 88-023 & 88-018 blade grinders

88-010 **Adjustment Wheel**
Use with Oregon 88-025 & 88-023 blade grinders
Not used on current production models

88-028 **Mulching Blade Adapter**
Use with Oregon 88-023 blade grinder

Shop Tools – Lawn Mower Blade Grinders

OREGON	Description	Product Code

Blade Grinder Accessories

88-017 **Adapter Plate Kit**
Use with Oregon® 88-023 blade grinder

88-034 **Mulching Blade Adaptor**
Use with Oregon 88-019 & 88-025 blade grinders

88-033 **Grit Collector**
Use with Oregon 88-019 & 88-025 blade grinders

88-045 **Stone Dresser**
With diamond tip
Use with all Oregon blade grinders, including 88-019, 88-021, 88-023, & 88-018

88-012 **Forward / Reverse Switch**
Use with all Oregon blade grinders, including 88-019, 88-021, 88-023, 88-025, & 88-018

88-009 **Rubber Feet (requires 4)**
Use with Oregon blade grinder 88-023

88-011 **On / Off Switch**
Use with older Oregon 88-021 & 88-023 blade grinders, & all Oregon 88-018, 88-019, & 88-025 blade grinders

88-065 **On / Off Switch**
Fits Oregon 88-021 blade grinder

88-066 **On / Off Switch**
Fits Oregon 88-023 blade grinder

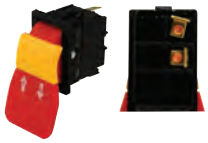

OREGON	Description	Product Code

Blade Grinder Accessories

55-001 **Blade Sharpener**
Ideal for sharpening rotary lawn mower blades,
roto tillers, sickle bar cutters, hoes, & scythes
Fits all 1/4" and 3/8" drills

514363 **Clamshell Pack – 1 of 55-001**

42-095 **Deck Leveler**

Blade Balancers

42-047 **Blade Balancer**
Economical version of Oregon 42-016 (OBS) blade balancer

42-100 **Blade Balancer**
A balanced blade reduces engine wear, stops vibration, and gives a smoother cut
Quality zinc die-cast

514364 **Clamshell Pack – 1 of 42-100**

II

Shop Tools

Mower Ramps

42-090 **Loading Ramps**
Folding, arched ramps ideal for loading riding mowers, lawn and garden equipment, & ATVs
Arched design prevents mower decks from hanging up on ramps
Compact – stores virtually anywhere
Galvanized steel for corrosion protection
Length: 7', width: 12"
Capacity: 1200 lb.
Assembly required

42-091 **Loading Ramps**
Made from light-weight aluminum (half the weight of Oregon® 42-090), improved anchoring straps
Folding arch: 7-1/2"
Length: 90", width: 11-1/4", height: 6"
Weight: 33 lbs.
Distributed maximum loading capacity: 1500 lb. (750 lb. per ramp)
No assembly required

42-095 **Deck Leveler**

42-434-0 **Chain Holder**
For 35 through 60 chain
Works with bicycle chain
Complete with instructions
Holds chain in tensioned position to allow both hands to install links

Shop Tools

42-430-0 **Chain Detacher**
For 25 through 60 chain
Complete tool – hardened tip

42-431-0 **Punch Only – (repair part for Oregon 42-430-0)**
For 25 through 60 chain
Hardened tip

42-432-0 **Chain Detacher**
For 60 through 100 chain
Complete tool – hardened tip

42-001 **Battery Hydrometer**
Heavy-duty shop version
Measures cell specific gravity

OREGON	Description	Product Code

Shop Tools

42-422 **Compression Tester**
Flexible hose with side pressure release valve
14 mm and 18 mm screw-in adaptors for spark plug holes
Reads up to 300 p.s.i.
Length: 12"

42-505-0 **Feeler Gauge**
For sizes .0015" thru .035"
Contains 25, 1/2" gauges

42-441 **Flywheel Puller**
Replaces Briggs & Stratton 19069/19165
For 3–3 1/2 HP engines
For 6, 7, & 8 HP engines

42-073 **Flywheel Knocker**
For Tecumseh engines
5/8" thread

42-446-0 **Gasket Scraper**
Nickel-chrome plated
Wide blade
“Insulite” plastic handle
Length: 11"

42-411 **Hemostat**
6" Curved
Adjustable pressure locking teeth

42-031 **Spark Tester**
Allows visual inspection of ignition output
Use between coil wire and spark plug

42-087 **Spark Tester**
Use with engine running or just cranking
Similar to Briggs & Stratton part number 19368

Shop Tools

OREGON	Description	Product Code

Shop Tools

42-217	**Piston Ring Compressor** Depth: 2" Capacity: 1-3/4" to 3-1/2" Adaptable to all types of rings Allen wrench included	
42-452	**Spark Plug Wrench** Length: 4" Fits: 3/4" & 13/16" plug nuts Rust proof Electro-plated Briggs & Stratton 19374	
42-455	**Throttle Wire Z-bender** For use with .054" & .072" throttle control innerwire Easy-grip handle Instructions included	
42-480-0	**T-handle Allen Wrench Set** 5-Piece set – metric Sizes 2.5 mm, 3 mm, 4 mm, 5 mm, & 6 mm 6" arm with t-handle Ideal for import saws & trimmers	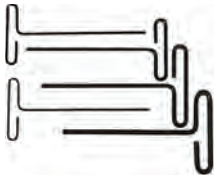
42-424	**Valve Spring Compressor** Ideal for removing and replacing valve springs on small engines. Long & slender, ideally adapted to reach into small recesses Adjustable steel spring jaws with cadmium finish	
42-427-0	**Valve Lifter** For Briggs & Stratton, Clinton, Onan, Wisconsin, Kohler, & Tecumseh	
42-311	**Valve Grinder** For seating valves to seats Vacuum cup attached directly to handle	
42-333	**Suction Cup** Fits Oregon 42-301 & 42-311 Cup diameter: 3/4"	
42-301	**Valve Grinder** Short self-locking stem Special valve grinding bit Small grinding spring Oregon 42-333 vacuum cup	

II

OREGON | Description | Product Code

Shop Tools

42-423 **Wireless Tachometer**

Built-in selector switch to choose 0-5000 RPM low scale or 0-15,000 RPM high scale
RPM readout accurate to within + or - 2%
Solid state electronics
Zener voltage regulator uses 9-volt battery (not included)
Built-in battery check
For all 2-cycle & 4-cycle single cylinder engines

42-450-0 **Roll Pin Punch Set**

Pt. size	Pin Length	Overall Length
1/8"	2"	4"
5/32"	2-1/2"	4-1/2"
3/16"	2-1/2"	4-1/2"
7/32"	3"	5"
1/4"	3-1/2"	5-1/2"
5/16"	4"	6"

42-516 **Valve Refacer**

Clamp designed so that main strain is directed into the machine v-block
May be held in vise or screwed to bench
Black enamel finish

88-400 **Oil Extractor**

Ideal for oil changes on boats, cars, motorcycles, and lawn power equipment
Hand operated vacuum pump mounts on 6 liter container
Extracts fluids from inaccessible or confined areas
Approximately 10 strokes needed to empty most lawn mower engine sumps
Comes with a removable pouring spout for easy disposal
Works great for trapped water

88-405 **Oil & Fuel Extractor**

Fuel and oil removal and transfer system. Remove oil and other fluids into the 48 oz. plastic container using the provided pump and hoses
Also use for fuel transfer between equipment using universal adapter provided
Insert the adapter and pump into fuel opening of machine needing fuel and the transfer hose into the tank with fuel
Pump the handle to start transfer
Quick & simple operation

42-961 **Oil Drain Pan**

10 quart capacity
Resistant to chemicals and solvents
Convenient pouring spouts for disposal
Low profile easily slides under lawn & garden tractors

II

Shop Tools

OREGON	Description	Product Code

Shop Tools

OILDRI	**Premium Oil-Dri Absorbant** Use Premium Oil-Dri Absorbant on oils, coolants, greases, water, & other spills Thermal process increases absorbents' power & minimizes dust 40 pound bag	

Tire Tools

67-110	**Valve Stem Fishing Tool** Aligns & holds valve in position with valve hole while mounting tire Fits all size holes	
67-111	**4-way Valve Stem Repair Tool** Valve core screwdriver Rethread valves Valve core easy out Deflates tubes	
67-112	**Bead Lube Swab** Ideal for applying lubricant to tire, beads & rims 10-1/2" length	
67-113	**Sliptac Tire Bead Lubricant** Prevents rim slippage, prevents rust, a liquid bead lubricant for easier mounting of lawn & garden, car, & truck tires One gallon bottle, dries fast, leaves no residue Non-combustible, non toxic	

II

OREGON	Description	Product Code

Tire Tools

70-700 **Safety Seal Tubeless Tire Repair Kit**
Kit contains:
Insertion tool
Heavy-duty spreader probe
Lube
Spare needle
Two razor blades
30 repair strips
Kit comes in convenient plastic case
Detailed instructions included

67-109-0 **Tubeless Safety Repair Kit for ATVs**
Emergency repair kit for ATV and other tires
Tires can be safely & easily repaired without removal from equipment
Complete with two (2) C02 cylinders, adaptor valve, &
hose to inflate tires with compressed air
Detailed instructions included
Packaged in convenient tube that can be attached to handle bars

70-721 **Tubeless Safety Repair Kit**
Emergency repair kit for ATV and other tires
Tires can be safely & easily repaired without removal from equipment
Does not include C02 cylinders and adaptor
Detailed instructions included

70-703 **Repair Refill**
60 per pack
Priced per pack

Oregon® manual tire changers are designed for time and labor savings. Any wheel can be secured onto the non-skid base plate by simply positioning and tightening the "quick adjust" center post onto the threaded rod. This unique design allows the operator to change small tires and switch wheel sizes or styles very quickly.

67-214 **Tire Changer – Complete**
Designed especially for 4" to 12"
Lug-center or bearing-in hub wheels
(Includes Oregon 67-215, 67-216, & 67-217)

67-215 **Replacement Threaded 12" Rod**
For Oregon 67-214 tire changer.

67-216 **Quick Adjust Center Post**
For Oregon 67-214 tire changer.

67-217 **"Duck Head" Mount/De-Mount Tool**
For Oregon 67-214 tire changer.

67-214

Shop Tools

OREGON	Description	Product Code

Tire Tools

67-221 **Oregon® Bead Seater Tire Inflator**
Oregon version of part number 67-201-1.
Has improved “fire hose” type release valve
Convenience of attached air hose for use as air bubble

Replacement Parts

OREGON	№	Description	Product Code
67-225	1	Air Hose	
67-224	3	Safety Release Valve	
67-226	4	Valve Assembly	

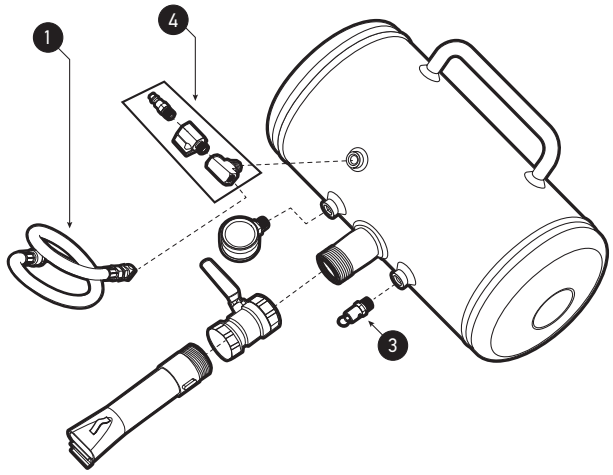

Can’t find what you’re looking for?
Try us online to search the latest products available.

OregonProducts.com

FIELD SUPPLIES

Equipment Racks and Accessories . . . SFS 74–76

Mower Sulkies . . . . . SFS 77–78

VP Fuels and Treatments . . . . . SFS 79–81

2 and 4-Cycle Oils . . . . . SFS 82–83

Bar and Chain and Hydraulic Oils . . . . SFS 84

Fuel Stabilizer . . . . . SFS 85

VP Power Wash . . . . . SFS 85

Fuel and Oil Cans, Storage, and Containment . . . . . SFS 86–91

Lubricants, Grease, Cleaners, Solvents, Sealants, and Glues . . . . . SFS 91–99

Hardware Assortments, Nuts, Bolts, and Washers . . . . . SFS 100–106

Commercial Equipment Racks & Accessories

OREGON	Description	Product Code

Equipment Racks

42-032 **Backpack Blower Rack/Holder**
BR3000 Backpack Blower Rack/Holder securely holds and locks most commercial backpack blowers using a flat pin design
- Heavy-duty black vinyl coating
- Comes with hardware, one lock
- Will internal wall mount or external trailer mount

42-196 **Retaining Strap Long**
For padlocks

42-043 **Hand Tool Rack**
HT2500 Hand Tool Rack
- Mounts on Oregon® 42-063 Trimmer Guard
- Holds up to 5 rakes, shovels, brooms, or other hand tools
- Durable powder-coated finish

42-044 **Multi-Purpose Holder**
MP2000 Multi-Purpose Holder powder-coated holder will hold most chainsaws and hand-held blowers
Includes bungee cord
13"L x 12"W x 9-1/2"H

42-063 **Vinyl-Coated Trimmer Racks**
Securely hold 3 trimmers and/or brushcutters
- Steel racks with heavy-duty black vinyl coating
- For mounting on open trailers
- Includes three keyed-alike padlocks

42-204 **Padlocks**
Set of 3
Keyed-alike

42-196 **Retaining Strap Long**
For padlocks

OREGON	Description	Product Code

Equipment Racks

42-064 **Vinyl Coated Equipment Racks**
Steel racks with heavy-duty black vinyl coating
- Rack has three adjustable 2" wide slot
- Accommodates a variety of equipment
- For mounting on open trailers
- Includes three keyed-alike padlocks

42-204 **Padlocks**
Set of 3
Keyed-alike

42-196 **Retaining Strap – Long**
For padlocks & flat retainer

42-189 **Flat Retainer**

42-199 **Nyloc Nut**

III

Can't find what you're looking for?
Try us online to search the latest products available.

OregonProducts.com

Commercial Equipment Racks & Accessories

OREGON	Description	Product Code

Pro Locker Wheel Locks

42-207	**Pin** Non-Locking Assembly Use with Oregon® 42-045 & 42-048	
42-208	**Pin** Locking Assembly Use with Oregon 42-045 & 42-048	

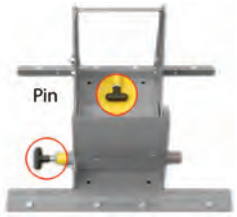

EZ Gate

42-041	**EZ Gate** Works on gates up to 200 lbs. (use 2 kits for heavier gates) • Recipient of the OEMmie Award • Installs in about an hour • Stainless housing • Aluminum hardware & no-rattle spring insert • Mounts easily to most trailer gates • Trailer & gate NOT included	

III

OREGON Description Product Code

Mower Sulkies

42-050 Mower Sulky

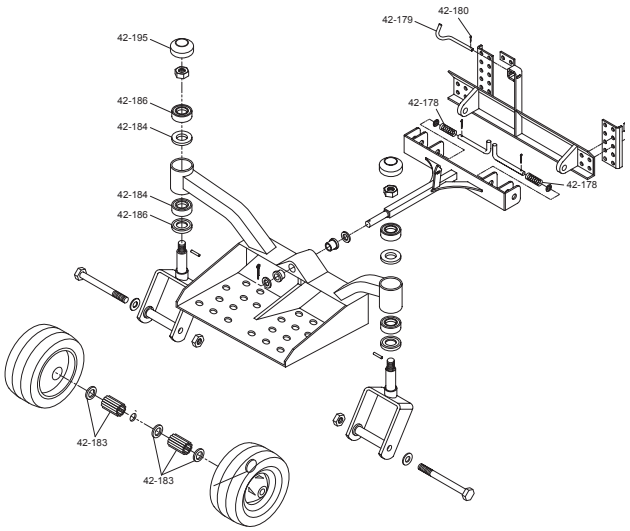

- Mower Sulky with 2 swivel wheels
- True zero-turn performance
- Keeps operator centered behind the mower
- Backs up easily & safely
- Tapered roller bearings for smooth operation
- Large platform for extra foot space
- Easily attaches in minutes to most commercial mowers
- A hydro necessity

III

42-066 Mower Sulky

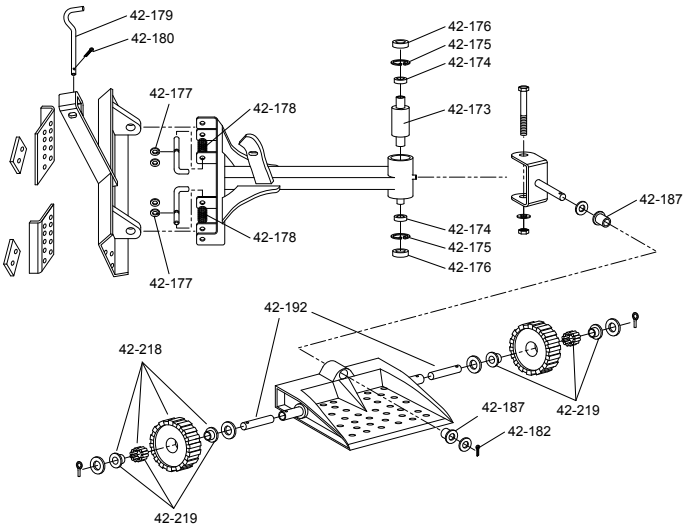

- Mower Sulky with 2 wheels with pneumatic tires
- Easily attaches in minutes to most commercial mowers
- Heavy-duty steel construction with durable powder-coat finish
- Protected grease fittings & quick release pins
- Large platform for extra foot space
- Increases productivity

Commercial Equipment Racks & Accessories

OREGON Description Product Code

Mower Sulkies

42-206 **Sulky**

- Mower Sulky with 2 wheels with pneumatic tires
- Easily attaches in minutes to most commercial mowers
- Heavy-duty steel construction with durable powder-coat finish
- Protected grease fittings & quick release pins
- Large platform for extra foot space
- Increases productivity

42-079 **Mower Sulky**

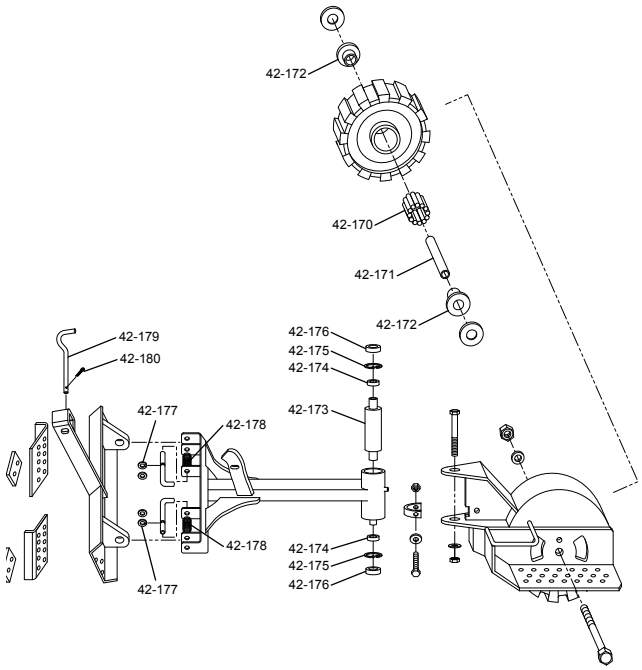

- Mower Sulky with 1 large pneumatic tire
- Easily attaches in minutes to most commercial mowers
- Heavy-duty steel construction with durable powder-coat finish
- Protected grease fittings & quick release pins
- Large platform for extra foot space
- Increases productivity

Mower Sulky Parts List

OREGON	Description	Product Code
42-172	Bearing Cap	
42-173	Axle Bushing	
42-174	Bearing	
42-175	Clip (10-Pack)	
42-176	Pivot End Caps	
42-178	Spring (10-Pack)	

OREGON	Description	Product Code
42-183	Wheel Bearing Kit	
42-187	Bronze Pivot Bushing	
42-188	Wheel Bearing w/ Cap	
42-192	Bushing Sleeve	
42-218	Wheel Assembly	
42-195	Caster Cap	

OREGON | Description | Product Code

Ethanol-Free Fuel – VP 4-Cycle

- Prevent ethanol-related problems
- Provide easier, more dependable starts
- Remain stable in storage through the off-season & beyond
- Avoid costly repairs & rebuilds
- Reduces downtime caused by fuel system problems
- Gets very economical when purchased in larger container sizes

VP6205	**VP 4-Cycle Fuel – 1 Quart** 94 Octane, ethanol-free, premium unleaded fuel in 1 quart can **Drop shipped only**	
VP6208	**Case of Eight (8) Quart Cans** **Drop shipped only**	
VP6201	**VP 4-Cycle Fuel – 1 Gallon** 94 Octane, ethanol-free, premium unleaded fuel in 1 gallon can **Drop shipped only**	
VP6206	**Case of Six (6) Gallon Cans** **Drop shipped only**	
VP6202	**VP 4-Cycle Fuel – 5 Gallon** 94 Octane, ethanol-free, premium unleaded fuel in 5 gallon pail **Drop shipped only**	
VP6204	**VP 4-Cycle Fuel – 54 Gallon** 94 Octane, ethanol-free, premium unleaded fuel in 54 gallon drum **Drop shipped only**	

III

Ethanol-Free Fuel – VP Pre-mix 50:1

VP6235	**VP Pre-Mix, 50:1 Fuel – 1 Quart** 94 octane, ethanol-free fuel + 100% synthetic oil (50:1) in 1 quart can **Drop shipped only**	
VP6238	**Case of Eight (8) Quart Cans** **Drop shipped only**	
VP6231	**VP Pre-Mix, 50:1 Fuel – 1 Gallon** 94 octane, ethanol-free fuel + 100% synthetic oil (50:1) in 1 gallon can **Drop shipped only**	
VP6236	**Case of Six (6) Gallon Cans** **Drop shipped only**	
VP6232	**VP Pre-Mix, 50:1 Fuel – 5 Gallon** 94 octane, ethanol-free fuel + 100% synthetic oil (50:1) in 5 gallon pail **Drop shipped only**	
VP6234	**VP Pre-Mix, 50:1 Fuel – 54 Gallon** 94 octane, ethanol-free fuel + 100% synthetic oil (50:1) in 54 gallon drum **Drop shipped only**	

Fuel & Oil Supplies, Storage, & Containment

OREGON	Description	Product Code

Ethanol-Free Fuel – VP Pre-Mix 40:1

VP6295	**VP Pre-Mix, 40:1 Fuel – 1 Quart** 94 octane, ethanol-free fuel + 100% synthetic oil (40:1) in 1 quart can **Drop shipped only**	
VP6298	**Case of Eight (8) Quart Cans** **Drop shipped only**	
VP6291	**VP Pre-Mix, 40:1 Fuel – 1 Gallon** 94 octane, ethanol-free fuel + 100% synthetic oil (40:1) in 1 gallon can **Drop shipped only**	
VP6296	**Case of Six (6) Gallon Cans** **Drop shipped only**	
VP6292	**VP Pre-Mix, 40:1 Fuel – 5 Gallon** 94 octane, ethanol-free fuel + 100% synthetic oil (40:1) in 5 gallon pail **Drop shipped only**	
VP6294	**VP Pre-Mix, 40:1 Fuel – 54 Gallon** 94 octane, ethanol-free fuel + 100% synthetic oil (40:1) **Drop shipped only**	

III

Ethanol-Free Fuel – VP Multi-Mix 40:1/50:1

VP6815	**VP Multi-Mix 40:1/50:1 – 1 Quart** 94 octane, ethanol-free fuel + 100% synthetic oil (40:1/50:1) **Drop shipped only**	
VP6818	**Case of Eight (8) 1 Quart Cans** **Drop shipped only**	
VP68111	**VP Multi-Mix 40:1/50:1 – 1 Gallon** 94 octane, ethanol-free fuel + 100% synthetic oil (40:1/50:1) **Drop shipped only**	
VP6812	**VP Multi-Mix 40:1/50:1- 5 Gallon** 94 octane, ethanol-free fuel + 100% synthetic oil (40:1/50:1) **Drop shipped only**	
VP6814	**Multi-Mix 40:1/50:1 – 54 Gallon** 94 octane, ethanol-free fuel + 100% synthetic oil (40:1/50:1) **Drop shipped only**	

OREGON | Description | Product Code

Ethanol-Free Fuel – VP Pro Max

VP6835 **VP Pro-Max Fuel – 1 Quart**
97 octane, ethanol-free fuel
Drop shipped only

VP6838 **Case of Eight (8) Quart Cans**
Drop shipped only

VP6832 **VP Pro-Max Fuel – 5 Gallon**
97 octane, ethanol-free fuel
Drop shipped only

VP6834 **VP Pro–Max Fuel – 54 Gallon**
97 octane, ethanol-free fuel, 50:1 Premix
Drop shipped only

Motor Treatments

VP6635 **VP Fix-It Fuel – 1 Quart**
Fuel system treatment for 2 & 4-cycle small engine applications
89 octane gas + oil blend "Mechanic in a Bottle™"
Drop shipped only

VP6638 **Case of Eight (8) Quart Cans**
Drop shipped only

VP6632 **VP Fix-It Fuel – 5 Gallon**
Fuel system treatment for 2 & 4-cycle small engine applications
89 octane gas + oil blend "Mechanic in a Bottle"
Drop shipped only

SF16 **Sea Foam Motor Treatment – 16 Ounces**
100% pure petroleum product that safely and effectively cleans internal fuel and oil system components, helping your gasoline or diesel engine run cleaner and more efficiently

- Sea Foam is an EPA-registered product
- Will not harm engine components, seals, gaskets, catalytic converters, or oxygen sensors
- Helps liquefy gum & varnish deposits when added to fuels or oils
- As a fuel system additive; cleans fuel injectors, clean carbon, gum, & varnish deposits
- Adds lubricity to fuel
- Stabilizes fuel for 2 years & controls moisture
- As an oil system additive; controls moisture, gum, varnish, & residue deposits

VP Fuel Accessories

VP3051 **Pump, Siphon**
For VP 54 gallon drums
Drop shipped only

VP348 **Spout, Power**
For VP 5 gallon cans
Internal vent tube ensures a smooth & quick pour
Drop shipped only

III

Fuel & Oil Supplies, Storage, & Containment

OREGON	Description	Product Code

2-Cycle Engine Oil

54-001

2-Cycle Oil, 50:1 Mix
1 gallon mix
Eight (8) 6-packs per case
Manufactured by Champion Brands LLC
Replaces Champion 4115L
2.56 oz.

54-002

2-Cycle Oil, 50:1 Mix
2-1/2 gallon mix
Eight (8) 6-packs per case
Manufactured by Champion Brands LLC
Replaces Champion 4115J
6.4 oz.

54-005

2-Cycle Oil, 50:1 Mix
5 gallon mix
12 per case
Manufactured by Champion Brands LLC
Replaces Champion 4115K
12.8 oz.

54-006

2-Cycle Oil: 50:1 Mix
50 gallon mix
Manufactured by Champion Brands LLC
Replaces Champion 4683N
1 gallon jug

54-007

2-Cycle Oil, 50:1 Mix
250 gallon mix
Manufactured by Champion Brands LLC
Replaces Champion 4683D
5 gallon jug

40092

Oregon® Only One™, 2-Cycle Engine Oil
1 gallon mix, previously Oregon 54-088-0

- Environmentally friendly, easy to use
- Contains fuel stabilizer
- Reduces particulate emissions & oil consumption by at least 50% over standard oil
- Good for all 2-cycle engines.
- Works with ethanol blended fuels
- Complies fully with California's Proposition 65 guidelines
- Contains 48, 1.8 oz. pillow packs per display case

III

OREGON	Description	Product Code

Synthetic 2-Cycle Engine Oil

VP2901 **2-Cycle Oil, Synthetic – 2.6 oz.**
Fully synthetic 2-cycle oil
Drop shipped only

VP2903 **2-Cycle Oil, Synthetic – 5.2 oz.**
Fully synthetic 2-cycle oil
Drop shipped only

VP2905 **2-Cycle Oil, Synthetic – 12.8 oz.**
Fully synthetic 2-cycle oil
Drop shipped only

4-Cycle Small Engine Oils

VP2911 **4-Cycle Small Engine Oil – 18 oz.**
Premium SAE 30, 4-cycle oil
Drop shipped only

VP2913 **4-Cycle Small Engine Oil – 32 oz.**
Premium SAE 30, 4-cycle oil
Drop shipped only

VP2921 **4-Cycle Synthetic Small Engine Oil – 32 oz.**
Full synthetic SAE 30, 4-cycle oil, 10W–30
Drop shipped only

Air Tool Oil

4067V **Champion Air Tool Oil**
Designed to lubricate pneumatic (air) driven tools of all types.

- Promotes longer tool life
- Contains rust & oxidation inhibiting additives
- Protects during cold & hot temperatures
- 12 per case
- 4 oz. bottle

III

Fuel & Oil Supplies, Storage, & Containment

OREGON Description Product Code

Bar & Chain Oil

Specially compounded to provide extra high tackiness and prevent "throw off" even under adverse weather conditions. Provides maximum engine power, low friction, and faster cutting time. High film-strength prevents wear or scuffing of chain links and bars while protecting metal parts against corrosion and rust. Resist build-up of deposits such as pitch, sap, or gum.

54-026 **Bar & Chain Lube**
1 quart bottle

54-059 **Bar & Chain Lube**
1 gallon bottle

VP2931 **VP Bar & Chain Oil – 32 oz.**
Drop shipped only

VP2933 **VP Bar & Chain Oil – 1 Gallon**
Drop shipped only

Hydraulic Oil

54-063 **SP Antiwear Hydraulic Oil**
Recommended for use in hydraulic systems – especially those designed with close tolerances operating where extremes of pressure, temperature, and pump speed are encountered.
Performance Properties:

- Anti-wear protection for a wide range of hydraulic pumps & components
- Use under severe operating conditions
- Meets the ASTM salt, corrosion, water, rust, & copper strip corrosion tests
- Excellent water separation qualities
- Filterability meets Denison requirements
- Foam control
- Good low temperature properties
- To ensure proper lubrication in all cases consult the operator's manual
- 2-1/2 gallon bottle

VP2941 **VP Hydraulic Oil – 2.5 Gallons**
Multi-purpose AW46
Drop shipped only

III

OREGON	Description	Product Code

Fuel Stabilizer

4205M	**Fuel Stabilizer** Stabilizes fuel and keeps it fresh, previously Oregon® 42-912-1 Keeps gum and varnish from developing Use in any 4-cycle, 2-cycle, gas, or diesel engine fuel systems Promotes easy starts after storage Convenient easy measure, easy pour bottle 8oz. bottle, 12 per carton	
VP2815	**VP Fuel Stabilizer w/Ethanol Shield – 8 oz.** For all 2 & 4-cycle engines, treats 80 gallons, reduces heat, extends engine life, protect & prevent repairs **Drop shipped only**	
VP2805	**VP Fuel System Cleaner – 16 oz.** Treats up to 20 gallons, cleans entire fuel system, restores engine performance, eliminates knocking & pinging, increases fuel mileage **Drop shipped only**	
VP2825	**VP Power Boost – 16 oz.** Treats up to 18 gallons, increases horsepower, cleans fuel system, improves combustion, provides "seat-of-the-pants" power boost **Drop shipped only**	
VP2835	**VP Diesel All-In-One – 24 oz.** Treats 240 gallons, cleans injectors & pumps, replaces lost lubrication, cleans sludge deposits, biodiesel protection, synthetic fuel catalyst, increase mileage, reduces smoking, increase cetane, disperses water, anti gel **Drop shipped only**	
VP2855	**VP Octanium™ – 32 oz.** Octane concentrate, eliminates knocking & pinging, lead substitute, cleans fuel injectors, improves throttle response & acceleration, eliminates gum & varnish build-up, & increases horsepower **Drop shipped only**	
VP2865	**VP Cetanium Diesel Treatment – 32 oz.** Cetane concentrate, cleans injectors & pumps, cleans sludge & deposits, biodiesel protection, increases mileage, reduces smoking, & replaces lost lubrication **Drop shipped only**	

VP Power Wash

VPM10011	**VP PowerWash Super Concentrate Formula** Packaged in gallons that can be used alone for extremely dirty, muddy, and/or large applications such as off-road vehicles or dirt track cars, as well as to refill Moto Formula spray bottles when diluted with water. **Drop shipped only**	
VPM10018	**Case of 4 of VPM10011, Drop Shipped Only**	
VPM10025	**VP PowerWash Moto Formula** Designed for power sports applications such as dirt bikes, ATV's, and UTV's as well as bicycles, including road, mountain and BMX. Great for zero turn and riding lawn mowers. **Drop shipped only**	
VPM10027	**Case of 12 of VPM10025, Drop Shipped Only**	

III

OREGON	Description	Product Code

Type I Safety Cans – 2 Quart, Galvanized Steel

UI-4-FS **Metal Safety Can, Red – 2 Quart**
Includes the F-15 funnel
Drop shipped only

Type I Safety Cans – 1 Gallon, Galvanized Steel

UI-10-FS **Metal Safety Can, Red – 1 Gallon**
Includes the F-15 funnel
Drop shipped only

UI-10-FSY **Metal Safety Can, Yellow – 1 Gallon**
Includes the F-15 funnel
Drop shipped only

UI-10-FSB **Metal Safety Can, Blue – 1 Gallon**
Includes the F-15 funnel
Drop shipped only

Type I Safety Cans – 2 Gallon, Galvanized Steel

UI-20-FS **Metal Safety Can, Red – 2 Gallon**
Includes the F-15 funnel
Drop shipped only

UI-20-FSY **Metal Safety Can, Yellow – 2 Gallon**
Includes the F-15 funnel
Drop shipped only

UI-20-FSB **Metal Safety Can, Blue – 2 Gallon**
Includes the F-15 funnel
Drop shipped only

UI-20-FSG **Metal Safety Can, Green – 2 Gallon**
Includes the F-15 funnel
Drop shipped only

OREGON	Description	Product Code

Type I Safety Cans – 2.5 Gallon Galvanized Steel

UI-25-FS **Metal Safety Can, Red – 2.5 Gallon**
Includes the F-15 funnel
Drop shipped only

UI-25-FSY **Metal Safety Can, Yellow – 2.5 Gallon**
Includes the F-15 funnel
Drop shipped only

UI-25-FSB **Metal Safety Can, Blue – 2.5 Gallon**
Includes the F-15 funnel
Drop shipped only

UI-25-FSG **Metal Safety Can, Green – 2.5 Gallon**
Includes the F-15 funnel
Drop shipped only

Type I Safety Cans – 5 Gallon, Galvanized Steel

UI-50-FS **Metal Safety Can, Red – 5 Gallon**
Includes the F-15 funnel
Drop shipped only

UI-50-FSY **Metal Safety Can, Yellow – 5 Gallon**
Includes the F-15 funnel
Drop shipped only

UI-50-FSB **Metal Safety Can, Blue – 5 Gallon**
Includes the F-15 funnel
Drop shipped only

UI-50-FSG **Metal Safety Can, Green – 5 Gallon**
Includes the F-15 funnel
Drop shipped only

F-15 **9" Polyethylene Funnel**
For metal type I cans
Drop shipped only

III

OREGON	Description	Product Code

Type II Safety Cans – Galvanized Steel

U2-11-S — **Metal Safety Can, Red – 1 Gallon**
OD: 7/8" with flex spout
Drop shipped only

U2-26-S — **Metal Safety Can, Red – 2.5 Gallon**
OD: 7/8" with flex spout
Drop shipped only

U2-51-S — **Metal Safety Can, Red – 5 Gallon**
OD: 7/8" with flex spout
Drop shipped only

D.O.T. Approved Type II Safety Fuel Cans – 5 Gallon, Galvanized Steel

1215R — **D.O.T. Type II Safety Can, 5 Gallon – Red**
OD: 7/8" with flex spout
Drop shipped only

1215Y — **D.O.T. Type II Safety Can, 5 Gallon – Yellow**
OD: 7/8" with flex spout
Drop shipped only

FD-25 — **12" Flex Spout**
OD: 7/8"
Drop shipped only

Oily Waste Safety Cans – Polyethylene

933-FL — **Oily Waste Safety Can, Red – 6 Gallon**
Polyethylene with foot lever
Drop shipped only

935-FL — **Oily Waste Safety Can, Red – 10 Gallon**
Polyethylene with foot lever
Drop shipped only

937-FL — **Oily Waste Safety Can, Red – 14 Gallon**
Polyethylene with foot lever
Drop shipped only

III

OREGON | Description | Product Code

Spill Platforms & Pallets

1632E **Modular Platform Unit – 2 Drum**
Same as Eagle 1632
Drop shipped only

1633E **Modular Platform Unit – 1 Drum**
Same as Eagle 1633
Drop shipped only

1620E **Containment Pallet – 2 Drum**
Same as Eagle 1620
Drop shipped only

1635E **Containment Pallet – 4 Drum**
Same as Eagle 1635
Low profile
Drop shipped only

1647E **Containment Platform – 4 Drum**
Same as Eagle 1647
In-line
Drop shipped only

1689E **Poly Ramp**
Same as Eagle 1689
For platform units and 1645 (yellow)
Drop shipped only

Storage Cabinets — For Flammable Liquids

1932E **Storage Cabinet – 30 Gallon**
Two manual doors
One shelf
Same as Eagle 1932
Drop shipped only

3010E **Storage Cabinet – 30 Gallon**
Two self-closing doors
One shelf
Same as Eagle 3010
Drop shipped only

1947E **Storage Cabinet – 45 Gallon**
Two manual doors
Two shelves
Same as Eagle 1947
Drop shipped only

III

Fuel & Oil Supplies, Storage, & Containment

OREGON	Description	Product Code

Storage Cabinets – For Flammable Liquids

4510E
Storage Cabinet – 45 Gallon
Two self-closing doors
Two shelves
Same as Eagle 4510
Drop shipped only

PI-47
Safety Storage Cabinet – 60 Gallon
For paint and ink
Red cabinet color
Drop shipped only

1926E
Safety Storage Drum Cabinet
55 Gallon
Yellow cabinet color
Same as Eagle 1926
Drop shipped only

1910G
Self Closing Kit
For Eagle cabinet doors

Fuel Cans – Canada Only

104432
Gas Can, Red
1.25 Gal. / 4.5 L with sight line
Available only in Canada

104433
Gas Can, Red
2.5 Gal. / 10 L with sight line
Available only in Canada

104434
Gas Can, Red
5 Gal. / 20 L
Available only in Canada

OREGON | Description | Product Code

Fuel Cans – Canada Only

92189 **Combi Can**
6 L & 2.5 L
Available only in Canada

106301 **Diesel Can, Yellow**
5 Gal. / 20 L
Available only in Canada

Parts for Canadian Gas Cans & Combi-Can

521016 **Replacement Kit**
Black cap, stopper, and vent cap
Available only in Canada

92199 **Replacement Kit**
Black cap, vent cap, and flexible spout
Available only in Canada

104435 **Safety Spout with Stop Flow**
Available only in Canada

Hand Cleaner

Permatex fast orange smooth hand cleaner in cream and lotion formulas. Fast orange is the #1 selling, biodegradable, waterless, petroleum solvent-free hand cleaner. It contains no harsh chemicals, mineral oils, or ammonia that can sting cuts and abrasions. Pure, fresh-smelling natural citrus power does the cleaning while aloe, lanolin, glycerin, and jojoba condition and protect skin. Fast orange gently deep cleans the toughest soils. Work great on laundry strains, scuff marks, tile floors, pet odors, and many other household cleaning needs.

F25219 **Fast Orange Hand Cleaner**
- With pumice
- 1 gallon

III

Lubricants, Cleaners, Solvents, Sealants, & Glues

OREGON	Description	Product Code

Grease, High Temperature

4050T — **High Temperature Grease**

- Stays put under extreme shock loads
- Very low friction coefficient
- Moisture resistant
- Meets NLGI GC-LB requirements
- Sold in cartons of 10 only
- Priced per each
- Previously 54-020-0
- 14 oz.

Grease Gun

54-021 — **Lube 'n Push Pro Grease Gun**

- Features an all-purpose nozzle
- Manufactured from high quality plastic materials
- Oil and grease resistant
- Withstands changes in temperature
- One hand operation
- 1.5 oz. capacity

Gear Lubricant

4120H — **Gear Lubricant**

- Multipurpose gear oil
- 1 quart squeeze bottle
- 80-90 WT, gear lube
- Previously 4113H

49-010 — **Gear Lubricant**

- "00" grease
- 9 oz. bottle
- 12 per case

49-015 — **Gear Lubricant**

- "0" grease
- 4-1/2 oz. tube
- 12 tubes per case

OREGON	Description	Product Code

Heavy-Duty Penetrant-Lubricant

4244M **Heavy-Duty Penetrating Lubricant**

Loosens and lubricates even the most rusted bolts.

- Displaces water
- Stops squeaks
- Protects metal surfaces against rust & corrosion
- Removes tar
- Previously 54-015-0
- 9 oz. aerosol can

16PB **PB Blaster Penetrating Lubricant**

Breaks free rusted joints and frozen parts by removing surface tension.

- Powerful, concentrated penetrating catalyst
- Non-evaporating lubricant
- VOC compliant
- 11 oz. aerosol can

WD-40 Lubricant

WD-40 Smart Straw — now you can use WD-40 to protect, clean, and lubricate thousands of items — without ever losing the straw again.

- Features a permanently attached straw that sprays two ways
- Flip it up for precision stream
- Flip it down for regular spray action

F110054 **WD–40 Lubricant**

Smart Straw 8 oz. aerosol can

F110078 **WD–40 Lubricant**

Smart Straw 11 oz. aerosol can

Carburetor Spray Cleaner

4521K **Carburetor Spray Cleaner**

Especially formulated to dissolve grease, varnish, and sludge from carburetors

- 11 oz. aerosol can
- Previously 54-012-0 & 4121K
- Heavy-duty

Starting Fluid

PSTFLL **Starting Fluid**

Premium starting fluid contains 50% ether for a fast start on the coldest days (regular starting fluid contains 25% ether)

- 11 oz. aerosol can

III

Lubricants, Cleaners, Solvents, Sealants, & Glues

OREGON	Description	Product Code

Starting Fluid

PSTFLS

Starting Fluid
Premium starting fluid contains 50% ether for a fast start on the coldest days (regular starting fluid contains 25% ether)
- 7 oz. aerosol can

Solvents

4117D

Champion Solvent
General-purpose standard solvent (sometimes referred to as mineral spirits or petroleum naptha)
- Close tolerance to specifications
- Good solvency
- Narrow range of volatility
- 5 gallon bucket

Tire Inflator

4086KH

Tire Inflator with Hose
Quickly inflates and seals tires with small to medium punctures
- Previously 54-010-0
- 12 oz. aerosol can

Brake Cleaner

4126P

Brake Cleaner
For disc and ABS brakes
- Removes brake fluid, dirt, & grease
- Removes harmful brake dust
- Improves braking & reduces noise
- Non-flammable
- Can be used to clean electrical components
- Does not contain silicones
- Leaves no residue
- Previously 54-017-0
- 19 oz. aerosol can
- NOT FOR SALE IN CALIFORNIA

4525I

Non-Chlorinated Brake Cleaner
Cleans brake, clutch parts, and CV joints
- Removes brake fluid, grease, & oil
- Degreases instantly
- Leaves no residue
- Previously 4125I
- 15 oz. aerosol can

OREGON | Description | Product Code

Battery Terminal Care

42-005 **Battery Terminal Protector Spray**
Fights battery corrosion.
- Prolongs battery life
- 10 oz. can

42-007 **Battery Cleaner Spray**
Penetrates, loosens, and neutralizes all acid corrosion deposits.
- Assures maximum current flow
- 16 oz. can

Permatex Sealant & Threadlocker

F80022 **Permatex Blue RTV Silicone GSK**
The original Permatex Blue
- Will not foul oxygen sensors
- Replaces almost any cut gasket
- Makes reliable "formed-in-place" gaskets that resist cracking, shrinking, & migrating
- Coats pre-cut gaskets to increase reliability
- Temperature range -65° F to 500° F (-54° C to 260° C) intermittent
- Resists auto & shop fluids
- First generation 1970-1980 gasket maker
- 3 oz.

F82180 **Permatex Ultra Black Silicone**
Fast-curing formula
- Sensor safe, low odor, & noncorrosive
- Meets performance specs of OE silicone gaskets
- Retains high flexibility, oil resistance properties through use of patented adhesion system
- Temperature range -65º F to 500º F (-54° C to 260° C) intermittent
- Resists auto & shop fluids and vibration
- 3 oz.

F29208 **Permatex Right Stuff® Cartridge**
Return equipment to service immediately when you make leak-proof gaskets in just one minute with the Right Stuff
- Latest elastomeric rubber gasket technology is blowout resistant
- Outperforms pre-cut gaskets
- Temperature range -75° F to 450° F (-59° C to 232° C) continuous, 500° F (260° C) intermittent
- Resists ATF, coolant, oil, & other shop fluids
- Protects against leaks caused by vibration & thermal expansion
- Sensor-safe
- 5 oz.

F81158 **Permatex Black RTV Silicone**
General-purpose, black RTV indoor / outdoor sealant
- Seals, bonds, repairs, mends, & secures glass, metal, plastics, fabric, vinyl, weather stripping, & vinyl tops
- Protects & repairs electrical wiring
- May be applied to horizontal or vertical surfaces
- Waterproof & flexible
- Temperature range -75° F to 450° F (-59° C to 232° C)
- Resists oil, water, weather, vibration, & grease
- 3 oz.

III

OREGON	Description	Product Code

Permatex Sealant & Threadlocker

F80050 **Permatex Clear RTV Silicone**

General-purpose, clear RTV indoor / outdoor sealant

- Seals, bonds, repairs, mends & secures glass, metal, plastics, fabric, vinyl, weather stripping, & vinyl tops
- Protects & repairs electrical wiring
- May be applied to horizontal or vertical surfaces
- Waterproof & flexible
- Temperature range -75° F to 400° F (-59° C to 204° C)
- Resists oil, water, weather, vibration, & grease
- 3 oz.

F81160 **Permatex Hi-Temp Red RTV Silicone**

Formulated for hi-temp applications, or heavy-duty use (such as towing, etc.)

- OEM specified
- Replaces almost any cut gasket by making reliable “formed-in-place” gaskets that resist cracking, shrinking, and migrating caused by thermal cycling
- Coats pre-cut gaskets to increase reliability
- Temperature range -65º F to 650º F (-54° C to 343° C) intermittent
- Resists auto and shop fluids
- First generation 1970-1980 gasket maker
- 3 oz.

24010E **Permatex Threadlocker Gel Blue**

The patent-pending GEL TWIST pin-point applicator puts the Threadlocker where you want it: on the part

- Gel formula provides “liquid-reliability” without drips, globs, mess or waste
- All-purpose, medium strength threadlocker
- Ideal for all nut & bolt applications 1/4 inch to 1 inch (6 mm to 25 mm)
- Eliminates need for stocking expensive lock nuts & lock washers
- Locks & seals while preventing parts from loosening due to vibration
- Protects threads from corrosion
- Removable with hand tools for easy disassembly
- .35 oz. / 10 g

F27100 **Permatex Threadlocker Red – 271**

High-strength threadlocker for heavy-duty applications 3/8 inch to 1 inch (10 mm to 25 mm)

- OEM specified
- Especially well-suited for permanently locking studs and press fits
- Adds 3,000 PSI holding power on slip and press fit assemblies
- Replaces set screws and snap rings
- Locks against vibration loosening
- May require heat or special tools for removal
- .20 oz. / 6 ml

F24200 **Permatex Threadlocker Blue – 242**

All-purpose, medium strength threadlocker. Ideal for all nut and bolt applications 1/4" to 3/4" (6 mm to 20 mm)

- OEM specified
- Eliminates need for stocking expensive lock nuts & lock washers
- Locks and seals while preventing parts loosening due to vibration
- Protects threads from corrosion
- Removable with hand tools for easy disassembly
- .20 oz. / 6 ml

III

OREGON | Description | Product Code

Gorilla Glue

Gorilla Glue bonds materials other adhesives simply can't—metal, stone, wood, ceramics, foam, glass and much more

- Versatile – ideal for most household fixes & building repairs
- 100% waterproof – does not break down when exposed to outdoor elements
- Easily passes ANSI/HPVA HP-1-2000 Types 1 & 2
- Temperature resistant – once it's dry Gorilla Glue is unaffected by extreme heat or cold
- Sandable, paintable, stainable – invisible glue line makes finishing easy
-

F50002 **Gorilla Glue**
- 2 oz. bottle

F50004 **Gorilla Glue**
- 4 oz. bottle

J-B Weld

F8265 **J-B WELD**

The world's finest cold-weld compound. It's a remarkably easy, convenient, and inexpensive alternative to welding, soldering, and brazing. One contains liquid steel / epoxy resin, and the other contains hardener. When mixed together in equal portions, a chemical reaction occurs that turns the mixture into a compound as hard and tough as steel — and with similar properties

- Bonds any combination of iron, steel, copper, aluminum, brass, bronze, pewter, porcelain, ceramic, marble, glass, PVC, ABS, concrete, fiberglass, wood, fabric, paper — just about any porous & non-porous material
- It stays pliable for about 30 minutes after mixing, sets in 4 - 6 hours, and cures fully in 15 - 24 hours
- Tensile strength: 3960 PSI
- Withstands temperatures up to 500°
- J-B Weld is packaged in two tubes

F8276 **J-B KWIK**

The same as the original J-B Weld except it stays pliable for about 2 minutes after mixing, sets in just 4 minutes, and cures fully in 4 hours. Because J-B KWIK cures so fast, it's not as strong or as heat-resistant as the original J-B WELD

- Tensile strength: 2100 PSi
- Withstands temperatures up to 300°
- J-B KWIK is packaged in two tubes

Snow & Ice Melter

This blend of sodium chloride and magnesium chloride is an efficient and affordable ice melt product. Aspen contains patented inhibitors designed to reduce impact to metal and spreading equipment. Melts ice to -7°F/-21°C

F51020 **Aspen Snow and Ice Melter**
- 20 pound poly bag

F51050 **Aspen Snow and Ice Melter**
- 50 pound poly bag

III

OREGON	Description	Product Code

Pressure Washer Pump Saver

AR64511 **Pump Saver**
- Non-aerosol version
- 16 oz. bottle

Slime Tire Sealant

Slime Tire Sealant is formulated and tested for use in all pneumatic tires. Once installed, Slime remains liquid and will not harden or dry out. As the Slime treated tire rotates, centrifugal force pushes the sealant to the tread area creating a layer of protection, repairing punctures as they occur, or treating existing punctures. Slime is not intended for use in tires losing pressure from sidewall punctures, bead leaks, damaged rims, or faulty valves. Slime is recommended as a repair only in high-speed, over-the-road tires.

- Remains liquid inside the tire, coating the tread area as the tire rotates
- Non-toxic, non-hazardous, non-flammable, non-aerosol, and water soluble
- Contains rust and corrosion inhibitors to maintain the integrity of the rim
- TPMS friendly (Note: May not install easily into tires with direct or valve mounted devices)
- Tires treated with Slime can be cleaned out with water allowing for the installation of a proper plug/patch
- Slime for tubeless tires can also be installed into tubeless bike tires
- Installs between the rim and the tire bead

Hold the bead open with two tire levers, install, and re-inflate with a fast burst of air to seat the bead to the rim. Repairs punctures up to (6 mm) using Fibro-Seal technology. What is Fibro-Seal technology? Slime utilizes a state-of-the-art blend of environmentally friendly fibers, binders, polymers and proprietary congealing agents which intertwine and clot within the puncture. This Fibro-Seal lattice, together with the viscous transportation system (the "green goo"), seeks out and tightly packs itself into the puncture, preventing and repairing flats with a flexible long-lasting plug.

SB1G **Slime Tire Sealant**
- 1 gallon jug with pump

SL07 **Slime Tire Sealant**
- 8 oz. bottle

SL09 **Slime Tire Sealant**
- 32 oz. bottle

SL11 **Slime Tire Sealant**
- 16 oz. bottle

Hardware Assortments, Nuts, Bolts, & Washers

Cotter Pins

OREGON	Qty.	Description	Product Code
08-410	280	Cotter Pins Standard Refill Qty. 10	
		Components	
	30	1/16" x 1"	
	20	1/16" x 2"	
	20	1/16" x 2"	
	30	3/32" x 1"	
02-209	20	3/32" x 1-1/2"	
	20	3/32" x 2"	
02-216	30	1/8" x 1"	
02-217	20	1/8" x 1-1/2"	
02-220	20	1/8" x 2"	
	20	5/32" x 1-1/2"	
	10	5/32" x 2"	
	10	5/32" x 2-1/2"	
	10	3/16" x 1-1/2"	
	10	3/16" x 2"	
	5	5/16" x 2"	
	5	5/16" x 2-1/2"	

Electrical Terminals & Connectors

OREGON	Qty.	Description	Product Code
08-152	170	Electrical Terminals & Connectors Standard Refill Qty. 10	
		Components	
	10	Scotch Tab Connector – Blue	
	10	Eye Terminal #6 Screw – Blue	
	10	Eye Terminal #10 Screw – Blue	
33-307	10	Eye Terminal 1/4" Screw – Blue	
	20	Spade Terminal #10 Screw – Blue	
	10	Electrical Terminal – Hook Style	
33-312	20	2-Wire Butt Connector – Red	
33-313	20	2-Wire Butt Connector – Blue	
33-301	10	Slide Connector – Female – Blue	
33-302	10	Slide Connector – Male – Blue	
	20	2-Wire Butt Connector – Yellow	
	10	Spade Terminal #6 Screw – Red	
	10	Hook Terminal #6 Screw – Blue	

E-Clips

OREGON	Qty.	Description	Product Code
08-300	240	E-Clips Standard Refill Qty. 10	
		Components	
	30	1/8"	
	50	1/4"	
02-007	50	3/8"	
02-002	40	1/2"	
02-008	20	5/8"	
02-006	30	3/4"	
02-009	20	7/8"	

Hair Pins

OREGON	Qty.	Description	Product Code
08-150	150	Hair Pins Standard Refill Qty. 10	
		Components	
02-411	10	.148" x 2-15/16"	
02-414	40	.080" x 1-3/16"	
02-417	20	.125" x 1-3/4"	
02-419	30	.062" x 1-9/16"	
02-424	30	.062" x 1-5/16"	
02-432	20	.094" x 1-5/16"	

Grease Fittings

OREGON	Qty.	Description	Product Code
08-016	110	Grease Fittings Standard Refill Qty. 10	
		Components	
02-010-1	30	Straight – 1/4"-28	
02-011-1	10	45° 1/4"-28	
	20	90° 1/4"-28	
	10	90° 1/8" Pipe	
	20	45° 1/8" Pipe	
02-015-1	20	Straight 1/8" Pipe	

Metric Hex Cap Screws & Nuts

OREGON	Qty.	Description	Product Code
08-240	225	Metric Hex Cap Screws & Nuts No Refills Available	
		Components	
	10	M4 x 12M Bolt	
	10	M4 x 20M Bolt	
	10	M4 x 16M Bolt	
	10	M4 x 25M Bolt	
	10	M4 x 20M Bolt	
	10	M4 x 30M Bolt	
	5	M8 x 25M Bolt	
	5	M8 x 40M Bolt	
	5	M10 x 16M Bolt	
	5	M10 x 40M Bolt	
	20	M5 Lock Washer	
	20	M6 Lock Washer	
	20	M8 Lock Washer	
	10	M10 Lock Washer	
	20	M4 Nut	
	20	M5 Nut	
	20	M6 Nut	
	10	M8 Nut	
	5	M10 Nut	

Socket Set Screws

OREGON	Qty.	Description	Product Code
08-200	200	Socket Set Screws Standard Refill Qty. 10	
		Components	
	10	1/8" x 3/16" Coarse	
	10	5/32" x 3/16" Coarse	
	10	3/16" x 1/4" Coarse	
	30	1/4" x 1/4" Coarse	
	20	1/4" x 3/8" Coarse	
02-509	30	5/16" x 3/8" Coarse	
	20	5/16" x 1/2" Coarse	
	10	3/8" x 3/8" Coarse	
	10	3/8" x 1/2" Coarse	
	20	1/4" x 1/4" Fine	

Throttle Accessories

OREGON	Qty.	Description	Product Code
	130	Throttle Accessories Refills only	
		Components	
	20	Cable Clip	
	10	Cable Clip	
02-115	10	Cable Clip	
02-099	20	Wire Swivel	
02-098	20	Wire Swivel	
02-108	10	Conduit Clip	
02-111	10	Conduit Clip	
	10	Conduit Clip	
02-106	10	Conduit Clip	
02-107	10	Conduit Clip	

III

Hardware Assortments, Nuts, Bolts, & Washers

Spring Pins / Roll Pins

OREGON	Qty.	Description	Product Code
08-375	285	Spring Pin / Roll Pin Standard Refill Qty. 10	
		Components	
	10	1/16" x 3/16"	
	10	1/16" x 5/16"	
	10	1/16" x 3/4"	
	10	5/64" x 1/4"	
	10	5/64" x 1/2"	
	10	5/64" x 1"	
	10	3/32" x 5/8"	
	10	3/32" x 1"	
	10	3/32" x 1-1/4"	
	10	1/8" x 5/8"	
	10	1/8" x 1"	
	10	1/8" x 1-1/4"	
	10	5/32" x 5/8"	
	10	5/32" x 1"	
	10	5/32" x 1-1/2"	
	10	3/16" x 5/8"	
	10	3/16" x 1"	
	10	3/16" x 1-1/2"	
	10	7/32" x 5/8"	
	10	7/32" x 1-1/4"	
	10	7/32" x 1-3/4"	
	10	1/4" x 5/8"	
	10	1/4" x 1-1/4"	
	10	1/4" x 1-3/4"	
	10	5/16" x 3/4"	
	10	5/16" x 1-1/2"	
	10	5/16" x 2"	
	5	3/8" x 3/4"	
	5	3/8" x 1-1/2"	
	5	3/8" x 2"	

Tiller Tine Pins

OREGON	Qty.	Description	Product Code
08-710	71	Tiller Tine Pins Standard Refill Qty. 10	
		Components	
02-327	5	5/16" x 2" Tine Pin	
02-325	18	3/8" x 2" Tine Pin	
	5	7/16" x 2-1/2" Tine Pin	
	3	1/2" x 2" Tine Pin	
02-432	32	1-5/8" Hair Pin	
02-414	5	1-3/16" Hair Pin	
02-417	3	1-3/4" Hair Pin	

O-Rings

OREGON	Qty.	Description	Product Code
08-225	170	O-Rings Standard Refill Qty. 10 Gas and Oil Resistant Buytl/Nitrile Rubber	
		Components	
02-635	20	1/8" ID x 1/4" OD	
	10	7/32" ID x 11/32" OD	
	10	3/8" ID x 1/2" OD	
	10	1/2" ID x 11/16" OD	
	10	11/16" ID x 7/8" OD	
02-648	20	5/32" ID x 9/32" OD	
	10	1/4" ID x 3/8" OD	
	10	3/8" ID x 9/16" OD	
	10	9/16" ID x 3/4" OD	
02-644-0	10	3/4" ID x 15/16" OD	
	10	3/32" ID x 15/64" OD	
02-640	20	3/16" ID x 5/16" OD	
	10	5/8" ID x 13/16" OD	
	10	5/8" ID x 3/4" OD	

III

Snap Rings

OREGON	Qty.	Description	Product Code
08-331	300	Snap Rings Standard Refill Qty. 10	
		Components	
	5	1-1/4"	
	10	1"	
	20	7/8"	
	10	13/16"	
02-486	35	3/4"	
02-490	30	5/8"	
	20	9/16"	
	20	1/2"	
	50	7/16"	
	50	3/8"	

Shoulder Bolts

OREGON	Qty.	Description		Product Code
04-170	190	Shoulder Bolts Standard Refill Qty. 10 All Bolts are 3/8-16 Thread with 3/4" Thread Length		
		Shoulder Length	Bolt Length	
04-151	10	1-17/32"	1-31/32"	
04-154	10	1-5/16"	2-1/16"	
04-153	10	1-3/8"	2-1/8"	
04-157	10	1-7/16"	2-3/16"	
04-150	10	1-1/2"	2-1/4"	
04-159	10	1-9/16"	2-5/16"	
04-155	10	1-5/8"	2-3/8"	
04-152	10	1-3/4"	2-1/2"	
04-158	10	1-7/8"	2-5/8"	
04-160	10	2"	2-3/4"	
		Keps Nuts		
04-556	90	3/8-16"		

In-Tank Fuel Filters

OREGON	Qty.	Description	Product Code
08-075-0	74	In-Tank Fuel Filters Standard Refill Qty. 10	
		Components	
07-200	10	1/8" Inlet, Plastic Case	
07-201	10	Felt Only – Fits 07-206	
07-204	5	Felt Style – For McCulloch	
07-205	5	Foam Style – For Stihl	
07-206	12	1/8" Inlet, Felt Style – Small	
07-207	10	1/8" Inlet, Felt Style – Large	
07-215	7	3/16" Inlet, Porous Plastic	

Gasket/Intake - 2-Cycle Engines

OREGON	Qty.	Description	Product Code
08-010	114	Gasket/Intake, 2-Cycle Engines Standard Refill Qty. 10	
		Components	
	10	Intake Gasket for HU*	
	5	Intake Gasket for HK*	
	5	Intake Gasket for HK*	
	10	Intake Gasket for HCA, HDA*	
	5	Intake Gasket for HL*	
	5	Intake Gasket for HS*	
	10	Intake Gasket for WS**	
	5	Intake Gasket for MDC**	
	2	Intake Gasket for WZ**	
	2	Intake Gasket for WZ**	
	5	Intake Gasket for HL*	
	10	Intake Gasket*	
	10	Intake Gasket*	
49-262	10	Intake Gasket	
	10	Intake Gasket	
	5	Gasket Material	
	5	Intake Gasket*	

*Tillotson **Walbro See the "Gasket" section for more information

III

Hardware Assortments, Nuts, Bolts, & Washers

Torsion & Extension Springs

OREGON	Qty.	Description	Product Code
08-201	112	Torsion & Extension Springs	
		Components	
	10	1/4" x 7/16" x .020"	
	10	1/4" x 7/8" x .018"	
	10	7/32" x 1-1/2" x .018"	
	12	11/32" x 1-7/8" x .031"	
	12	5/16" x 1-3/4" x .030"	
	12	9/32" x 2-3/16" x .022"	
	8	23/64" x 1-3/8" x .031"	
	8	13/64" x 1-3/4" x .021"	
	10	9/32" x 1-1/2" x .021"	
	10	9/32" x 3/4" x .025"	
	10	11/32" x 1-3/8" x .021"	

Hose Clamps

OREGON	Qty.	Description	Product Code
08-422	26	Hose Clamps No Refills Available	
		Components	
	8	16 mm (5/8")	
	6	22 mm (7/8")	
	4	25 mm (1")	
	2	28 mm (1-1/8")	
	2	35 mm (1-3/8")	
	4	40 mm (1-1/2")	

Linchpins

OREGON	Qty.	Description	Product Code
08-423	50	Linchpins	
		Components	
02-443	16	3/16" x 1-1/2"	
02-444	18	1/4" x 1-3/4"	
02-445	6	5/16" x 1-3/4"	
02-446	10	7/16" x 1-3/4"	

Shoulder Bolts

OREGON	Shoulder Length	Total Length	Product Code
04-154	1- 5/16"	2-1/16"	
04-153	1-3/8"	2-1/8"	
04-157	1-7/16"	2-3/16"	
04-150	1-1/2"	2-1/4"	
04-159	1-9/16"	2-5/16"	
04-155	1-5/8"	2-3/8"	
04-152	1-3/4"	2-1/2"	
04-158	1-7/8"	2-5/8"	
04-160	2"	2-3/4"	
04-164	2-1/4"	3"	

- Thread run: 3/8 - 16
- Thread length: 3/4"
- Shoulder O.D.: 1/2"
- Zinc plated

OREGON	Replaces	Description	Product Code
08-023	Universal	Shoulder Bolt Kit	

- Fits all 1/2" hub sconse
- Adjustable length: 9/16" to 2-1/4"
- Contains set of 4

04-163	John Deere M8469 M90937	Shoulder Bolt 1/2" x 2-1/2"

- Use with deck wheel #72-094
- Use on 38" deck & front wheels on 46" deck

Shoulder Bolts

OREGON	Replaces	Description	Product Code
04-151	Lawn Boy 603441	Shoulder Bolt Kit	

- Shoulder length: 1-17/32"
- Overall length: 1-31/32"
- Thread run: 3/8-16"

48-011	Exmark 513547 Toro 99-2842	Shoulder Bolt Kit	

- Deck wheel bolt for Lazer Z models

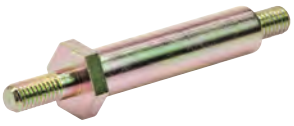

Handle Bolts

02-050-0	Snapper 9-1013	Handle Bolt	

- Curved head
- 5/16-18 thread
- Use with tightening knob #81-010

Blade Bolts

OREGON	Length	Product Code
04-111	1"	
04-114	1-1/4"	
04-112	1-1/2"	
04-116	1-3/4"	
04-117	2"	
04-119	2-1/4"	
04-118	2-1/2"	
04-121	3"	

- 3/8-24 UNF
- Grade #5 raw

Self Tapping Bolts

02-301	3/8"-16 x 1"
02-304	5/16"-18 x 1-1/4"

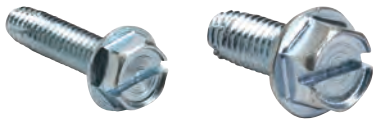

Bar Stud Nut

04-009	Stihl 000-955	Bar Stud Nut

- 8 mm x 1.25"
- Fits 028A, 031AV, 034AV, 042AV, & 045AV

Keps Nuts

OREGON	Type	Fits Bolt Size	Product Code
04-555	UNC	1/4-20	
04-556	UNC	3/8-16	

Pal Nuts

OREGON	Size	Product Code
04-720	3/16"	
04-725	1/2"	

Spindle Nuts

OREGON	Type	Fits Bolt Size	Product Code
04-001	UNF	14 mm x 1.5"	
04-015	UNF	5/8"-18	

III

Hardware Assortments, Nuts, Bolts, & Washers

Flat Steel Washers

OREGON	O.D.	I.D.	Thickness	Product Code
09-238	2-1/4"	3/8"	1/8"	
09-255	2-1/4"	1/2"	1/8"	

Fiber Washers

OREGON	O.D.	I.D.	Thickness	Product Code
09-009	2-1/4"	3/8"	1/8"	
09-006	2-1/4"	1/2"	1/8"	
09-011	2-1/4"	5/8"	1/8"	

Cupped Steel Washers

OREGON	O.D.	I.D.	Thickness	Product Code
09-901	2-1/4"	1/2"	1/8"	
09-905	1-1/2"	1/2"	1/8"	

Machinery Bushings

OREGON	O.D.	I.D.	Thickness	Product Code
02-168	7/8"	1/2"		

III

SAFETY

Chainsaw Safety Overview . . . . . SFS 110–111
Safety Helmet and Footware . . . . SFS 112–113
Chainsaw Chaps . . . . . SFS 114
Rain Gear . . . . . SFS 115
Gloves . . . . . SFS 116
Safety Eyewear . . . . . SFS 117–120
Face Masks . . . . . SFS 120
Hearing Protection . . . . . SFS 121

Most Common Chainsaw Injuries

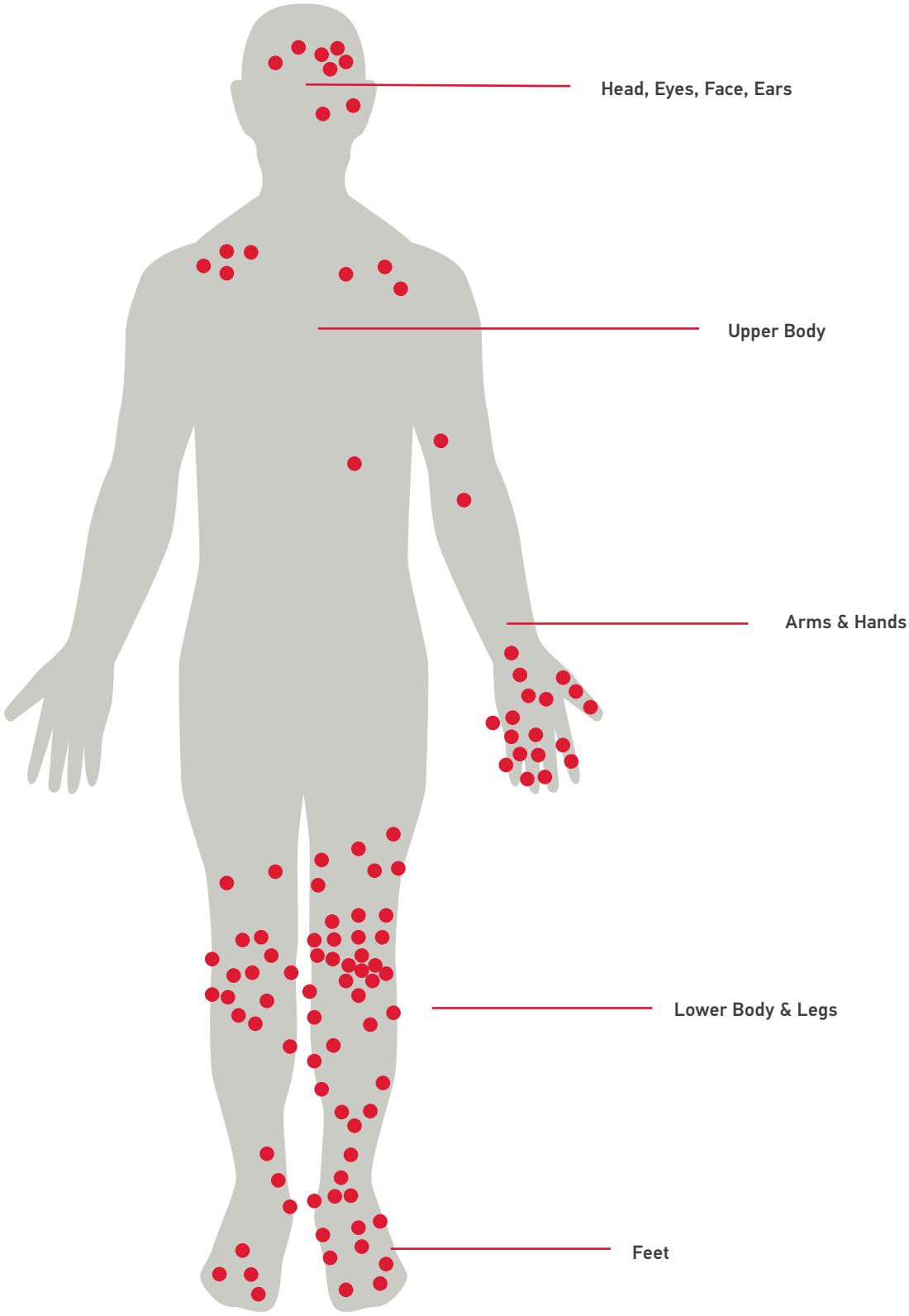

Recommended Chainsaw Protective & Safety Clothing & Equipment

Head, Eyes, Face, Ears
- Safety helmet
- Ears & face protection
- Eye protection

Upper Body
- Surveyor's safety vest (non-protective)
- Premium rain shell (non-protective)
- Premium softshell rain jacket (non-protective)

Hands
- Chainsaw gloves

Lower Body
- Apron chaps
- Full-wrap chaps

Feet
- Rubber forestry boots
- Forestry boot insulated liner
- Premium leather boots

Safety Helmet

- High-impact & scratch resistant ABS helmet
- 20 ventilation holes & crown shape for optimum breathability
- UV-stabilized helmet shell
- Rain gutter
- Tested according to ANSI Z89.1-2003

- Four-point, easy-to-adjust harness
- Highly absorbent, removable, & washable sweatband

- Anti-slip headband
- Easy-to-use “pull-push” system for precise snug-fit

OREGON	Description	Product Code
564101	Professional Helmet	
	Replacement parts	
564649	Earmuffs	
564579	Visor	
585673	Visor Holder	
564570	Four-Point Suspension Kit	
564580	Sweatband	

- Durable stainless steel mesh visor
- Strong flip up & down function
- Extended face protection
- Light-weight
- Assembles in seconds

- Easy up-and-down adjusting earmuff system
- Optimum, consistent noise attenuation (NRR value 24 dB)
- Comfortable ear cushions

IV

Rubber Forestry Boot (US)

- Rubber boot with cotton canvas lining
- Nitrile oil, chemical, & slip resistant lug sole
- Achilles tendon, ankle, & metatarsal protection
- Rubber lace collar with safety reflective stripe
- ASTM F1818 chainsaw protection
- ASTM Class 1 steel toe cap
- Electric shock resistant

Size	OREGON	Product Code
8	295440-8	
9	295440-9	
10	295440-10	
11	295440-11	
12	295440-12	
13	295440-13	
14	295440-14	

Neoprene Boot Liner

- Triple layer air moisture control system ventilates while wicking away perspiration
- Conforms to your feet – no need to buy larger boots
- Machine washable

Size	OREGON	Product Code
S	535364S	
M	535364M	
L	535364L	
XL	535364XL	

Premium Leather Boots (US)

Oregon Exclusive

- High-quality breathable, oiled nubuck leather
- Waterproof
- Steel toe cap
- Steel anti-penetration plate in outsole protects against sharp objects
- Removable metal crampon for ultra grip, stability, & log control
- Breathable, fast-wicking lining for moisture & temperature control
- Breathable, removable, & washable foot bed

Size	OREGON	Product Code
8	295450-8	
9	295450-9	
10	295450-10	
11	295450-11	
12	295450-12	
13	295450-13	
14	295450-14	

Apron Chaps (US)

- Conforms to ASTM F1897-08 & UL classified
- 8 layers breathable warp knit chainsaw protection
- 600 Denier oxford shell
- Adjustable length with top snaps on waist
- 2 straps for custom fit
- Machine washable

OREGON	Description	Product Code
563979	36" Length – Black Apron Safety Chaps (US)	
564132-32	32" Length – Orange Apron Safety Chaps (US)	
564132-36	36" Length – Orange Apron Safety Chaps (US)	
564132-40	40" Length – Orange Apron Safety Chaps (US)	

CLASSIFIED UL 17R2

Full-Wrap Chaps (US)

- Conforms to ASTM F1897-08 & UL classified
- 8 layers breathable warp knit chainsaw protection
- 600 Denier oxford shell
- Adjustable length with top snaps on waist
- 3 straps for custom fit
- Machine washable

OREGON	Description	Product Code
564134-32	Adjustable 32" Length – Premium Full-Wrap Safety Chaps	
564134-36	Adjustable 36" Length – Premium Full-Wrap Safety Chaps	
564134-40	Adjustable 40" Length – Premium Full-Wrap Safety Chaps	

CLASSIFIED UL 17R2

Premium Rain Apparel

Rain Shell

- Hood snaps off or folds into fleece collar
- Articulated elbows
- Safety reflective piping front & back
- Ripstop nylon (210D) shell & taffeta/mesh lining
- Underarm vents
- Five large zippered pockets
- Adjustable waist, hem, & wrists

Softshell Rain Jacket

- Anti-pill microfleece lined collar for greater comfort
- Drop back tail
- Locker loop inside neck
- Side insert gussets for greater mobility
- Underarm vents increase breathability & feature waterproof zippers
- Waterproof zippers on lower-front pockets, chest pocket, & sleeve hanky pocket
- Tech pocket with headphone loop inside left-chest
- Adjustable wrist straps help to seal out weather
- Elastic drawcord with toggle adjusters concealed inside waistband

The rain shell and softshell jacket may be used together for increased protection against the elements

OREGON	Description	Product Code
538539M	Medium Premium Rain Shell	
538539L	Large Premium Rain Shell	
538539XL	X-Large Premium Rain Shell	
538539XXL	XX-Large Medium Premium Rain Shell	
538540M	Medium Premium Softshell Jacket	
538540L	Large Premium Softshell Jacket	
538540XL	X-Large Premium Softshell Jacket	
538540XXL	XX-Large Premium Softshell Jacket	

Chainsaw Gloves

- Smooth leather, high-visibility gloves
- Excellent chainsaw feel
- Durable palm area
- Close-fit wrist design
- Left-handed chainsaw protection

OREGON	Description	Product Code
91305M	Chainsaw Gloves – Medium	
91305L	Chainsaw Gloves – Large	
91305XL	Chainsaw Gloves – Extra Large	

Gloves

OREGON	Description	Product Code
F14001	Gloves – Cordova Cotton, Jersey Knit Wrist	
F16001	Gloves – Cordova Cotton, Jersey Red-Lined, Slip-On Style	
23101W	Gloves – Cordova Gold, Chore, Winged Thumb Knit Wrist	
F34001	Gloves – Cordova Cotton, String Knit	
4020L	Gloves – Cordova Latex, Disposable Glove, Large, Box of 100	
4020XL	Gloves – Cordova Latex, Disposable Glove, X-Large, Box of 100	
4090L	Gloves – Cordova Nitrile, Disposable Glove, Large, Box of 100	
4090XL	Gloves – Cordova Nitrile, Disposable Glove, X-Large, Box of 100	

IV

F34001

23101W

F14001

F16001

Luminary™ Safety Eyewear

- Ultra light-weight design — just four-fifths of an ounce — makes it easy to wear all day, every day
- Patent-pending design includes unique, translucent temple insets for an electrifying new look
- Elastic temples help relieve pressure behind the ears & provide superior comfort
- Fingertip nosepiece reduces slippage, so glasses stay on securely
- Large, one-piece polycarbonate lens, with an anti-scratch coating, offers durable protection
- Wrap-around design, along with an integrated browguard, ensures complete protection
- Imprinted with Oregon® logo

OREGON	Temple Color	Inset Color	Lens color	Product Code
42-141	Black	Clear	Clear	
42-142	Silver	Gray	Gray	
42-143	Black	Amber	Amber	
42-144	Black	Pacific Blue	Pacific Blue	
42-145	Black	Orange	Orange	
42-146	Silver	Gray	Silver Mirror	
42-147	Black	Blue	Blue Mirror	

42-141

42-142

42-143

42-144

42-145

42-146

42-147

IV

OREGON | Description | Product Code

Safety Eyewear

42-131 **Blue Light Filter Lens**
(Amber-red color)
Black frame & adjustable legs
Meets ANSI Z87.1+ safety standard

42-130 **Red Mirror Lens**
(Rainbow appearance)
Black frame & adjustable legs
Meets ANSI Z87.1+ safety standard

42-132 **Amber-Yellow Mirror Lens**
Black frame & adjustable legs
Meets ANSI Z87.1+ safety standard

42-133 **Gray Lens**
Black frame & adjustable legs
Meets ANSI Z87.1+ safety standard

42-134 **Silver Mirror Lens**
Black frame & adjustable legs
Meets ANSI Z87.1+ safety standard

42-136 **Clear Lens**
Black frame & adjustable legs
Meets ANSI Z87.1+ safety standard

OREGON Description Product Code

Starlite – Safety Eyewear

Unitary scratch-resistant lens has two distinct viewing areas, each with 9.75 base curvature, delivering a wider range of vision. Deep universal-fit temples provide side protection equal to that of eyewear with large sideshields.

42-139 **Starlite**
Blue mirror lens with gray frame
Oregon® logo on leg
Meets ANSI Z87.1+ safety standard
99.9% UVA & UVB protection

42-138 **Starlite**
Gray lens with gray frame
Oregon logo on leg
Meets ANSI Z87.1+ safety standard
99.9% UVA & UVB protection

42-137 **Starlite**
Clear lens with clear frame
Oregon logo on leg
Meets ANSI Z87.1+ safety standard
99.9% UVA & UVB protection

Eyewear Protection

Impact and scratch resistant lens with integrated sideshields wraps around for wide field of vision. Adjustable and racheting temples for custom fit. Molded in browguard for protection above eyes. Meets ANSI Z87.1+ standards and 99.9% UVA/UVB protection.

42-163 **Coverall Eyewear**
Covers prescription eyewear

42-135 **Clear Goggles**
Allows full vision in all directions
Fits over regular eye glasses
Meets ANSI Z87.1+ safety standard

Scorpion-Mag™ Safety Eyewear

Built in bifocal, contemporary styling, adjustable and racheting legs, soft grip nose piece, black frame with clear lens, and free "Scorpion's Tail" retainer included. Meets ANSI Z87.1+ standards and 99.9% UVA/UVB protection.

42-152 **Scorpion-Mag – Clear Safety Eyewear**
2.0 Diopter magnification

OREGON Description Product Code

Venom Head Gear with Visor

Fang-shaped Venom Visor is contoured to provide complete protection from head to chin. Tension adjustment ensures that raised visor stays in place.

42-160 **Venom Head Gear & Visor**
Three-part adjustment system
Meets ANSI Z87.1+ standards

Truair Disposable Respirator Masks

N95 NIOSH-approved; has exhalation vent to reduce hot air build up. Two non-latex elastic head straps plus adjustable nosepiece give secure fit 95% filtration against aerosols free of oils below PEL.

42-161 **Vented Respirator Mask**
10-Pack

N95 NIOSH-approved; non-latex elastic head straps plus adjustable nosepiece give secure fit. 95% filtration against aerosols free of oils below PEL.

42-162 **Respirator Mask**
20-Pack

OREGON	Description	Product Code

Hearing Safety

42-561-0 **Light-Weight, Red Earmuffs**
Comfortable protection
Soft & wide PVC cushions
Adjustable cup height
NRR: 21DB

42-560-0 **Light-Weight, Yellow Earmuffs**
Comfortable protection
Soft & wide PVC cushions
NRR: 24DB

IV

IV

IV

IV

IV

IV

OREGON®

Lawn & Garden Parts

LG

Sections LG

★ **New Products and Illustrated Parts Lists**
Cautions & Warnings . . . 2–3
2019 New Products . . . 4–39
Illustrated Parts Lists . . . 40–175

A/B **Replacement Parts A–B**
Air Filters . . . 176–222
Bearings & Bushings . . . 223–249
Belts . . . 250–339
Blade Adaptors . . . 340–343
Blades: Overview, by Length, Universal, OEM Replacements, and Edgers . . . 344–591

C/N **Replacement Parts C–N**
Carburetor Parts . . . 592–674
Centrifugal Clutches . . . 675
Chain Roller Parts . . . 676
Chain Saw & Cut-Off Saw Parts . . . 677–693
Commercial Parts . . . 694–698
Control Cables . . . 699–723
Drive Parts . . . 724–728
Electrical Parts . . . 729–744
Engine Parts . . . 745–760
Fuel Line & Accessories . . . 761–780
Grass Bags . . . 781–782
Hedgetrimmer Parts . . . 783
Ignition Parts . . . 784–791
LInkage, Jacks, & Hardware . . . 792–801
Miscellaneous Parts . . . 802–805
Mufflers . . . 806–811

O/S **Replacement Parts O–S**
Oil Filters . . . 812–820
Pulleys . . . 821–841
Seats . . . 842–845
Snow Thrower Parts . . . 846–863
Spark Plugs . . . 864 –868
Spindles . . . 869–910
Sprayers . . . 911–912
Springs . . . 913–914
Starters, Starter Parts, and Starter Rope . . . 915– 937
Steering Parts . . . 938–941
Switches . . . 942–951

T/W **Replacment Parts T–W**
Tiller Parts . . . 952–954
Tires, Tubes, & Tire Chains . . . 955–965
Timmer Lines & Heads . . . 966–1013
Trimmer Brush Cutter Blades . . . 1014–1015
Trimmer & Blower Parts . . . 1016–1028
Wheels . . . 1029–1047

X **Cross References**
Briggs & Stratton X-Reference . . . 1048–1071
OEM X-Reference . . . 1072–1168
Aftermarket X-Reference . . . A1–A48

Cautions & Warnings

Attention Dealers

Oregon® urges you to read and follow all of these safety guidelines when selecting, installing, servicing or operating any outdoor power equipment. Encourage your customers to do the same.

Air Filters

CAUTION:

- Shut off engine before servicing or making any adjustments.
- Disconnect battery at negative terminal. (for electric start engines only)
- Remove and ground spark plug wire
- Refer to owner's manual and follow safety warnings

Belts

WARNING:

- Never operate equipment without original guards securely in place

CAUTION:

- Shut off engine before servicing or making any adjustments
- Disconnect battery at negative terminal. (for electric start engines only)
- Remove and ground spark plug wire
- Refer to owner's manual and follow safety warnings

Blades

WARNING:

Before servicing or removing blades

- Remove and ground spark plug wire
- Disconnect battery at negative terminal. (for electric start engines only)
- Refer to owner's manual and follow safety warnings
- Do not substitute any other bolt for the blade retaining bolt. Blades and blade retaining bolts are specially made for this application
- Proper torque must be used when tightening the blade retaining bolt; refer to owner's manual. If this safety precaution is not followed, the blade could come off during operation

While mowing

- Immediately inspect blade if abnormal vibration occurs

WARNING:

- Properly support and secure mower when replacing blade.
- To avoid possible injury, always wear proper eye and hand protection when servicing mower blade.
- Unbalanced or warped blades can cause damage to the mower and/or personal injury.
- Inspect the blade(s) and replace damaged blades before operating the mower

Brush & Grass Blades

WARNING:

- Check that cutting attachment shields are properly located and in good condition. Never remove, modify, or in any way compromise the cutting attachment shield.
- Read and follow all instructions supplied by the manufacturer of the trimmer/brushcutter.
- Rigid blades must be used only on brush cutters designed to accommodate blades. Never use a metal cutting attachment on a brushcutter without a shoulder harness, properly mounted barrier handlebar and cutting attachment shield in good condition.
- Never remove the cutting attachment shield.
- Be certain that replacement cutting attachments are fitted properly with regard to the direction of rotation, the size of the mounting bolt and the size of the arbor.
- Do not install Oregon metal blades on any brushcutter capable of spinning the blade faster than 10000 RPM.
- Check the condition of cutting attachments frequently. Always replace cutting attachments that are cracked, bent, or warped – even if such damage appears to be superficial. Never attempt to repair damaged cutting attachments by welding or bending.
- Always wear eye, face, leg and foot protection during operation.
- Keep bystanders and pets at least 50 feet away in all directions. Always clear the work area of rocks, glass, wire, nails or other foreign objects that can be picked up and thrown by the rotating cutting attachment.
- Sharpen or maintain the cutting attachment according to instructions packaged with the attachment.
- Use cutting attachments to cut only the types of material for which the attachment is designed.
- Disconnect power to electrically powered trimmer/brushcutters before performing any service.
- **Do Not install metal blades on curved shaft trimmers**.

Attention Dealers

Oregon® urges you to read and follow all of these safety guidelines when selecting, installing, servicing or operating any outdoor power equipment. Encourage your customers to do the same.

Flywheel Key

WARNING:

- Do not strike the flywheel with a hammer or hard object because the flywheel may shatter during later operation.

CAUTION:

- Remove and ground spark plug wire
- Disconnect battery at negative terminal. (for electric start engines only)
- Refer to owner's manual and follow safety warnings

Fuel Caps

WARNING:

- Never operate equipment without fuel cap in place
- Allow engine to cool before removing fuel cap

Other Fuel Related Components

WARNING:

Gasoline and its vapors are extremely flammable. Fire or explosion can cause severe burns or death.

- Never smoke when working on fuel system components
- Keep gasoline away from sparks, open flame, pilot lights, and other ignition sources
- Shut off fuel before removing the fuel filter

Spark Plug Removal

CAUTION:

- Remove and ground spark plug wire
- Disconnect battery at negative terminal. (for electric start engines only)
- Refer to owner's manual and follow safety warnings
- Allow engine to cool before removing spark plug

Throttle Cable

CAUTION:

- Wear eye protection and gloves when opening package and handling throttle cable
- Disconnect battery at negative terminal. (for electric start engines only)
- Refer to owner's manual and follow safety warnings.

Trimmer Line & Trimmer Head

WARNING:

Wear eye and hearing protection:

- Thrown objects and loud noise can cause severe eye injury and hearing loss.
- Wear eye protection meeting ANSI Z87.1 standards and ear protection when operating this unit.
- Use a full face shield when needed.

Keep bystanders away:

- Keep all bystanders, especially children and pets, at least 50 feet (15m) from the operating area.

Thrown objects and rotating cutter can cause severe injury:

- Do not operate without the cutting attachment shield in place. Keep away from the rotating cutting attachment.
- Do not install Oregon®trimmer heads on any trimmer capable of spinning the attachment faster than 10000 RPM.
- Refer to owner's manual and follow safety warnings
- Refer to trimmer line installation instructions provided with aftermarket trimmer heads.

(See Trimmer Lines & Heads section for additional Cautions and warnings specific to Trimmers & Brushcutters)

2019 New Products

OREGON	Replaces	Description	Product Code

Air Filter – Ariens

30-211	21548000	**Foam Pre-Filter** – NEW Fits Briggs & Stratton 92200, 112200, 12A900-12T899, & 128700-129799 series; John Deere 14PZ, 14SZ, JS20, & JS30 & selected engines on JA60, JA65, JS60, JS61, & JS63; Toro 20323, 20835, 20836, & 29639	

Air Fliters – Briggs & Stratton

30-208	4216 5088 5088H 5088K 5099 698369 Craftsman SPA8S1062853001	**Foam Air Filter** – NEW Fits Briggs & Stratton 9B902, 98902, 98982, 10A902, 10B902 and 10A982 Length: 5-1/8", Width: 2-7/8"	
30-210	595191	**Foam Pre-Filter** – NEW Use with Oregon 30-168 Air Filter	
30-211	4147 493537 493537S 5064 5064H 5064K Ariens 21548000 John Deere LG493537S	**Foam Pre-Filter** – NEW Use with Oregon 30-710 air filter	

Air Filters – Echo

30-618	130310-39730	**Air Filter** - NEW Fits Echo CS3500, CS4200, & CS420 Height: 2-11/50", outer diameter: 2-1/2", inner diameter: 1-3/4"	
30-621	A226-000291	**Air Filter** - NEW Echo CS350TES	

OREGON	Replaces	Description	Product Code

Air Filters – Echo

30-625	130310-38331	**Air Filter** - NEW Fits Echo CS440, CS4400, CS450, CS510, CS520, & CS530 Height: 1-3/8", length: 2-1/2", outer diameter: 2-1/2", inner diameter: 1-3/4"	
30-620	P021-016371	**Air Filter** - NEW Fits Echo CS600	
30-619	A226-000070	**Air Filter** - NEW Fits Echo CS6702 & CS680S	
30-624	A226000350 A226000351 A226000470 A226000471 A226000472	**Air Filter** - NEW Fits Echo PB251, PB255, PB265, PE280, SRM266, & SRM280 Length: 3-1/8", width: 3-1/8", height: 3/8"	
30-616	13030508360 13030508361	**Air Filter** - NEW Fits Echo PB60H, PB460, PB600, PB601, PB750 & PB755 series blowers; Shindaiwa EB633 Length: 10-3/8", width: 2-7/8", height: 1-11/32"	
30-617	A226000031 A226000032	**Air Filter** - NEW Fits Echo 400, 500, 600, & 700 series backpack blowers Length: 4-5/32", width: 2-5/8", height: 1-3/8"	

Air Filters – Exmark

30-655	127-9252 Toro 127-9252	**Air Filter** – NEW Toro Timecutter with 42 & 50 decks and V-Twin engines Length: 6-1/8", width: 3", height: 3-3/16"	
30-656	116-0164 Toro 117-0390	**Air Filter** – NEW Fits Exmark Lazer Z S series with 48 & 60 deck, Lazer Z E series with 60 deck, Lazer Z X series with 60 & 72 deck, and Quest with 52 deck; Toro Commercial Z Master G3 74901, 74926, 74937, 74943CP, 74951, 74956CP, 74977, & 74956 Height: 4-1/2", outer diameter: 2-1/2"	

2019 New Products

OREGON	Replaces	Description	Product Code

Air Filters – Honda

30-206	17211-Z8B-901 17211-ZL8-003 17211-ZL8-023	**Air Filter** – NEW Fits: GC135, GCV135, GC160, GCV160, GC190, GCV160, GS190, & GSV190 Length: 5", width: 4-1/2", height 1"	
30-613	17211-Z8B-901	**Air Filter** – NEW Fits: GC135, GCV135, GC160, GCV160, GC190, GCV160, GS190, & GSV190 Length: 5", width: 4-1/2", height: 1"	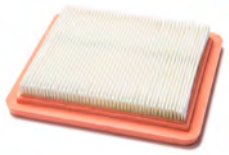

Air Filters – Husqvarna

30-622	505126303 505126306	**Air Filter** – NEW Fits Husqvarna 555, 560XP, CS2258, & CS2260 Length: 3", width: 2-1/2", height: 1-3/8"	
30-634	544 08 08-02	**Air Filter** – NEW Fits Husqvarna 445 445E 450, & 450E chainsaws	
30-631	544 18 16-02 506 36 72-03	**Air Filter** – NEW Fits Husqvarna K750 Length: 5", width: 4-1/2", height: 1-3/8"	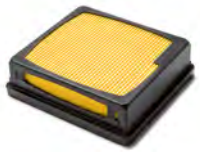
30-627	525 47 06-01 525470602	**Air Filter** – NEW Fits Husqvarna K750 Length: 5", width: 4-1/2", height: 1-3/8"	
30-645	503 81 45-01 503 81 45-02 503 72 52-01	**Air Filter** – NEW Fits Husqvarna 362, 362EPA, 362 Special, 362XP, 365, 365EPA, 365 Special, 365 Special EPA, 371, 371EPA, 372, 372EPA, & 372XPW chainsaws	
30-630	503 81 45-03	**Air Filter** – NEW Fits Husqvarna 362, 365, 371, & 372 Length: 3-1/2", width: 2-7/8"	
30-637	501 80 71-05 501 80 71-01 501 80 71-02 501 80 71-06 501 80 71-03	**Air Filter** – NEW Fits Husqvarna 61, 181, 266, 281, & 288 Length: 3-1/2", Width: 2-7/8"	

OREGON	Replaces	Description	Product Code

Air Filters – Husqvarna

30-648	503 89 82-01	**Air Filter** – NEW Fits Husqvarna 51 & 55 Length: 4", width: 3-1/2", height: 2"	

Air Filter – Kawasaki

30-224	11013-0727 11013-7050 99999-0383	**Air Filter** – NEW Fits Kawasaki FR541V-FR600V Length: 5-7/8", width: 2-3/4", height: 3-1/4"	

Air Filters – Kohler

30-212	14 083 15-S	**Air Filter** – NEW Fits Kohler XT650 & XT675 Length: 4-1/4", width: x 3-1/2", height: 1/2"	
30-225	20 083 02 20 083 02-S 20 083 06 20 083 06-S Ariens 21541600 Craftsman 24642 Cub Cadet KH-20 883 02-S1 Cub Cadet OCC-20 083 02 Husqvarna 577513401 Toro 98018	**Air Filter** – NEW Fits Cub Cadet LTX1040 & LTX1045; Kohler SV470S-SV620; Toro 13AX60RG744 & 13AX60RH744 lawn tractors For Courage single series 15 thru 22 HP engines Length: 6-3/4", width: x 5-3/8 “, height: 1-3/8"	
30-605	17 083 23-S 17 083 04-S 17 083 07-S	**Air Filter** – NEW For Kohler CH270 Length: 2-1/2", height: 3-7/8"	
30-606	17 083 21-S 17 083 03-S 17 883 01-S1	**Air Filter** – NEW For Kohler CH395 & CH440 Length: 3", height: 4-3/8"	

2019 New Products

OREGON	Replaces	Description	Product Code

Air Filters – Kohler

30-609	47 883 03-S1	**Air Filter Combo, Filter with Pre-Filter** – NEW For Kohler CV, CH, CV24-CV740, & CH730-CH740; 17 thru 25 HP Command horizontal and vertical engines Length: 7", height: 2-1/2"	
30-608	14 083 09-S	**Foam Air Filter** – NEW	

Air Filter – Mitsubishi

30-498	505 30 92-01 KA40046AA	**Air Filter** – NEW Fits Mitsubishi TL20, TL23, TL26, TL33, TL43 TL52, & TU26 Length: 7-1/4", width: 4-3/16", height: 1"	

Air Filters – MTD

30-207	951-14627 751-14627	**Air Filter** – NEW For POWERMORE Premium OHV Engine Series 140 cc Length: 6-2/3", width: 4-4/5", height: 1-1/2"	
30-209	951-14628	**Air Filter** – NEW Fits 5T65RU, 5T65RUA, 1T65NUB, & 5T65VUA engines Length: 4/5", width: 1-1/10", height: 1-1/3"	
30-610	937-05065A 951-12260 751-12260 937-05065	**Air Filter** – NEW Fits Huskee 13W2775S031 & 4P90JUB; Yardman 13A2785S001 & 4P90JUB For MTD 420cc OHV Engines Length: 6-2/3", width: 4-4/5", height: 1-1/2"	
30-611	753-06417	**Foam Air Filter** – NEW Fits Troy Bilt TB22EC, TB2MB, & TB32EC; Bolens BL110 & BL160; Remington RM2510, RM2520, RM2560, RM2570, & RM2599; Murry M2500, M2510, MS2550, & MS2560; Yard Man Y25, Y2500, Y2550EC, Y2700EC, Y2900EC, Y60, YM21CS, & YM71SS	

Air Filters – Oleo-Mac, Efco

30-640	61200025AR	**Air Filter** – NEW Fits SP38, SP42, SP380, & SP440	

OREGON	Replaces	Description	Product Code	

Air Filters – Oleo-Mac, Efco

30-629	61120018R	**Air Filter** – NEW Fits Oleo Mac 746, 753, & 755 brush cutters; Efco 8460, 8530IC, 8535, 8535 ERGO, & 8550 BOSS brush cutters Length: 7-1/4", width: 4-3/16", height: 1"		

Air Filter – Red Max

30-652	577633001 57763301 577633001	**Foam Pre-Filter** – NEW Fits Red Max BCZ230TS, BCZ2450, BCZ2460, BCZ260, BCZ2650, BCZ2660, BCZ3050, & BCZ3060		

Air Filters – Stihl

30-220	1140 140 4401	**Air Filter** – NEW Fits MS 311, MS 362, & MS 391 chainsaws Length: 4-3/8", width: 3-5/8", height: 1-7/8"		
30-221	1145 140 4400	**Air Filter** – NEW Fits MS 201 T chainsaws Length: 4-7/16", width: 3", height: 3/4"		
30-223	4148 141 0300	**Air Filter** – NEW Fits FS 240 C, FS 240 RC, FS 260 C, FS 260 RC, FS 360 C, FS 410 C, FS 460 C, & FS 460 RC		
30-639	1125-160-1612 1125-120-1626	**Air Filter** – NEW Fits Stihl 034, 036, MS340, & MS360		
30-644	4229-120-1800 4229 124 1500	**Air Filter** – NEW Fits Stihl BG45, BG46, BG55, BG65, BR45, SH55, & SH85 Length: 3", width: 2-3/8", height: 1/2"		
30-643	4180-120-1800	**Air Filter** – NEW Fits Stihl FC100, FC110, FC90, FC95, FR130, FS90R, FS100, FS100ARX, FS110, FS130, FS310, FS87, FS90, FT100, FX130, HL100, HL90, HL95, HT100, HT101, HT130, HT131, KM100, KM110, KM130, KM90, & SP90 Length: 2-5/8", width: 3", height: 1/2"		

2019 New Products

OREGON	Replaces	Description	Product Code

Air Filters – Stihl

30-653	0000-141-0300	**Foam Pre-Filter** – NEW Fits Stihl 044, 046, 064, 066, 084, 088, MS440, MS441, MS460, MS640, MS650, MS660, MS780, & MS880	
30-222	4144 124 2800	**Foam Pre-Filter** – NEW Fits: Stihl KM56, KM56R, KM56C, & KM56RC Kombi engines; FC56, FC56C, FC70, & FC70C edgers; FS40, FS40C, FS50, FS50C, FS50L, FS56, FS56C, FS56R, FS56RC, FS70, FS70C, & FS70RC trimmers; HT56 & HT56C hedge trimmers Length: 3", width: 2-3/8", height: 1/4"	

Air Filter – Toro

30-657	120-4308 127-9193	**Air Filter** – NEW Fits Toro XLS 380 lawn tractor, Timecutter SS3200, SS3216, SS4216, & ZS3200S Length: 6-1/4", width: 2-1/2", height: 3-1/4"

Air Filter – Wisconsin Robin (Subaru)

30-650	20B-32610-H7 20B-32610-J7	**Air Filter** – NEW Fits Robin EX35-40 Length: 7-1/4", width: 4-3/16", height: 1"

Bushing – MTD

72-080	941-0706	**Flanged Wheel Bushing** - NEW OD: 1", ID: 5/8", Width: 1"

OREGON	Replaces	Size	Description	Type	Product Code

Belt – Briggs & Stratton

75-517	L 708044		**Premium** – V-Belt – NEW

Belts – Exmark

75-509	109-7299	3/8" x 36"	**Premium Belt** – Lawn Mower Drive - NEW Fits Exmark ECXKA21 commercial 21
75-510	103-4244		**Premium Belt** – V - NEW Fits Exmark NAV20KC and NAV27KC models
75-513	126-6626		**Premium Belt** – V - NEW Fits Exmark RAE708GEM48300, RAS710CKC48300, RAX651GKA484A3

OREGON	Replaces	Size	Description	Type	Product Code
Belts – Exmark					
75-514	109-9023	5/8" x 219 1/4"	**Premium Belt** – Deck Belt – NEW Exmark Next Lazer Z and Lazer Z AS with 72" deck		
75-516	116-3111	5/8" x 157-3/4"	**Premium Belt** – Deck – NEW Exmark Vantage stand-on mowers with 52" deck		
75-515	126-2538	5/8" x 163 1/2"	**Premium Belt** – Deck – NEW Exmark Turf Tracer X series walk behinds with 52" deck (2015–2016)		
115-704	126-2538	5/8" - 163 1/2	**Premium Belt** – Deck – NEW Exmark 52" Turf Tracer, X-Series		
115-705	126-2539	5/8" - 173 3/4"	**Premium Belt** – Deck – NEW Fits Exmark 60" Turf Tracer, X-Series		
115-706	126-0783	5/8" - 136 1/3"	**Premium Belt** – Deck – NEW Fits Exmark 48" Turf Tracer, S-Series		
Belt – Honda					
75-501	22431-VG3-N01	35" - 3/8"	**Replacement Belt** – Blade Drive – NEW Wrapped clutching		
Belt –Lawn-Boy					
115-703	110-9429	32-1/10 X 3/8"	**Premium Belt** – Blade Belt – NEW 10634, 10732, 10734, 17732, 17734 & fits all 20-inch self-propelled Lawn-Boy models (2008–2013)	1	
Belts – MTD					
75-502	54-04260	34-1/8 - 3/8"	**Premium Belt** – Deck – NEW Wrapped, clutching two-stage snow throwers and walk-behind mowers	1	
75-518	754-05106 954-05106 754-05106A	1/2" x 60"	**Premium Belt** – Deck – NEW Wrapped Clutching Fits 28" Decks (2017 and newer)	1	

2019 New Products

Blades – Country Clipper

	OREGON	OEM No.	Length	Center	Outer	C to C	W / T	Off	Lift	Prod. Code
	92-180 NEW	H-2882	**16-15/16**	5/8			2.50/.203	5/16	1	
(3) for 48" deck. Notched high-lift										
	92-179 NEW	H-2387	**18-3/8**	1/2			2.50/.203	5/16	3/4	
(3) for 52" deck, (2) for 36" deck. low-lift										
	92-154 NEW	H-2883	**18-3/8**	5/8			2.50/.203	5/16	1	
(3) for 52" deck, (2) for 36" deck high-lift, notched blade										
	92-166 NEW	H-2885	**20-15/16**	5/8			2.50/.203	5/16	1	
(3) for 60" deck, (2) for 41" cut high-lift, notched blade										
	92-181 NEW	H-2886	20-15/16	5/8			2.50/.203	5/16	1	Fusion®
(3) for 60" deck, (2) for 41" cut high-lift, notched blade										
	92-178 NEW	H-2501	**25**	1/2			2.50/.203	5/16	1-1/4	
(3) for 72" deck, rolled high-lift										

Blade – Cub Cadet

	98-099 NEW	942-04312	**21-1/4**	5/8	3/8	3	2 .50/.138	7/16	1-1/8	

(2) for 42" deck, star center hole. 2-in-1 blade side discharges and mulches. Fits two-blade 42" lawn tractors and RZT mowers (1997 and newer). For Troy-Bilt, MTD, MTD Gold, Bolens, White Outdoor, Yard Machines, Yard Man, and Huskee lawn tractors

Blades – Exmark

	92-919 NEW	103-6386-S	**16-1/4**	15/16			3.00/.203	0	5/8	
(2) blades for 32" deck, 3 blades for 48" deck. low-lift										
	92-912 NEW	103-6461	**17-1/2**	15/16			3.00/.203	3/8	1	
(3) blades for 50" deck, high-lift										

Blades – Exmark

	OREGON	OEM No.	Length	Center	Outer	C to C	W / T	Off	Lift	Prod. Code
(3) for 56" cut, notched blade, high-lift	**92-913** NEW	109-6462-S	**19-1/2**	15/16			3.00/.203	3/8	1	
(2) for 42" deck, Navigator rear bagger, RHC	**92-921** NEW	103-4210	**22**	7/8	1/4	3	2.75/.164	11/16	13/16	
(3) blades for 72" deck, high-lift	**92-910** NEW	109-6465-S	**24-11/16**	15/16			3.00/.203	3/8	1	

Blades – Gravely

(2) for 40" deck; (3) for 60" deck	**91-255** NEW	089046	**20-1/2**	5/8			2.00/.250	0	5/8	
(3) for 72" cut	**92-417** NEW	09290600	**24-1/2**	5/8			2.50/.250	5/16	1-1/4	

Blades – Honda

Upper blade for 21" walk behind mowers. Micro Cut. Fits Versamow HRX217, use with 91-519	**191-518** NEW	72531-VH7-000	**21**	7/8	7/16	3-1/16	4.75/.120	1	7/8	
Lower blade for 21" walk behind mowers. Micro Cut. Fits Versamow HRX217, use with 91-518	**191-519** NEW	72511-VH7-000	21	1-1/4	3/8	3-1/2	2.50/.120	1/2	0	

Blades – Husqvarna

(3) for 54" deck. Fits 54 in. PZ Series Zero Turn Riders	**95-095** NEW	525525901	**19**	5/8			2.50/.250	0	1-1/4	G3
(2) for 42" cut. Yard Tractor and Zero Turn mowers	**95-623** NEW	586918101 586918102	**21**	5 pt. Star			2.50/.250	0	1-1/4	

2019 New Products

Blades – Husqvarna

	OREGON	OEM No.	Length	Center	Outer	C to C	W / T	Off	Lift	Prod. Code
	195-093 NEW	5868569	**21**	5 pt. Star	3/8	1-7/8	2.25/.149	7/16	1	

Fits 42" ecks, Reaper Blade

	195-089 NEW	406712	21	5/8	3/8	1-7/8	2.25/.134	9/16	1-5/16	

Fits 21" Craftsman and Husqvarna walk behind mowers, 3 in 1 blade

Blade – John Deere

	91-080 NEW	M163983	**20-15/16**	15/16			2.75/.203	9/16	1-7/16	

(3) for 60 Inch deck, fits models John Deere 737, 757, 777, 797, 997, and 7 Iron, requires 3 for 60 Inch deck

Blade – Kubota

	92-184 NEW	K5559-34330	**21-9/16**	11/16			2.50/.250	9/16	1-1/8	

(2) for 42" Zero Turn mowers, Z122R

Blades – MTD

	98-152 NEW	942-05052	**17-1/4**	5/8 5 pt. Star			2.50/.164	9/16	1-3/16	

	98-151 NEW	942-05056	**18-5/8**	5/8 5 pt. Star			2.50/.164	9/16	1-3/16	

	98-067 NEW	742-04312	**21-1/4**	5/8 5 pt. Star			2.50/.164	9/16	1-3/16	

	98-095 NEW	942-04217	**22**	5/8 5 pt. Star			3.15/.149	1/4	1-1/2	

2 in 1 blade for side discharge and bagging, fits lawn tractors and RZTs with 42" timing deck (2009 and newer)

Blades – Progressive Turf

	OREGON	OEM No.	Length	Center	Outer	C to C	W / T	Off	Lift	Prod. Code
	91-594 NEW	526615	**5-1/4**	3/4			2.50/.187	1/2	5/16	
	94-124 NEW	526601	**5-1/4**	3/4			2.50/.187	1/2	5/8	
	94-121 NEW	522360	**23**	1	9/16	6-1/2	2.50/.312	11/16	3/4	
(3) for 65" decks, fits SDR-65, high-lift										
	94-122 NEW	522364	**24**	1	9/16	6-1/2	2.50/.312	11/16	3/4	
(4) for 90" deck. fits SDR-90, high-lift										
	91-593 NEW	522372	**27**	1	9/16	6-1/2	2.50/.312	3/4	1-3/8	
	94-123 NEW	522376	**32**	1	9/16	10	2.50/.312	13/16	3/4	

Blades – Toro

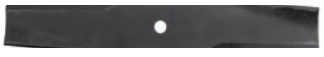	**94-125** NEW	1073196	**16-1/2**	5/8			2.50/.250	0	1-1/8	
(3) for 48" deck. fits Toro Commercial Recycler Mowers										
	94-135 NEW	110-0406 105779503	**18**	5/8			2.50/.250	0	11/16	
(3) for 52" Z Force Turbo master decks										
	94-132 NEW	105777903	**18**	5/8			2.50/.250	0	1-1/8	
(3) for 52", 2 for 36" decks										

2019 New Products

Blades – Toro

	OREGON	OEM No.	Length	Center	Outer	C to C	W / T	Off	Lift	Prod. Code
	94-133 NEW	108-1128 105771603	**20-1/2**	5/8			2.50/.250	0	11/16	
(3) for 60" rear discharge Z Master decks										
	94-138 NEW	110-4701	20-1/2	5/8			2.50/.250	0	1	
(3) for 60" Deck										
	94-126 NEW	105771503	20-1/2	5/8			2.50/.250	0	1	
(3) for 60" deck. fits Professional Z Master with 7-gauge side										
	94-130 NEW	105777703	**20-1/2**	5/8			2.50/.250	0	1-1/8	
(3) for 60" deck. Recycler decks										
	94-136 NEW	110-0410 105771203	**24-1/2**	5/8			2.50/.250	0	11/16	
(3) for 72" deck, low-lift										
	94-134 NEW	110-0404 105771103	24-1/2	5/8			2.50/.250	0	1	
(3) for 72" mid-flow deck, Z Master										
	94-131 NEW	105777803	24-1/2	5/8			2.50/.250	0	1-1/8	
(3) for 72" deck										

OREGON	Replaces	Description	Product Code

Carburetor

50-034	Kohler 14 853 49-S Kohler 14 853 36-S	**Carburetor** - NEW Fits Kohler XT650 & XT675	

OREGON	OEM No.	Length	Center	Outer	C to C	W / T	Off	Lift	Prod. Code

Carburetor Kits

49-921	Zama GND-27	**Diaphram and Gasket Kit** - NEW Fits C1Q-D13 A, C1Q-DM14, C1Q-E5A, C1Q-E5B, C1Q-H14 A-B, C1Q-H17 A-D, C1Q-H19 A-C, C1Q-H27, C1Q-H32A, C1Q-H35, C1Q-H42, C1Q-H42, C1Q-H44, C1Q-H45, C1Q-M24, C1Q-M25, C1Q-M26, C1Q-M39, C1Q-W2A, C1Q-W5 A-C, C1Q-W6, A-C, & C1Q-W8 carburetors
49-924	Zama GND-35	**Diaphram and Gasket Kit** - NEW Fits most C10 type carburetors
49-923	Zama GND-55, Zama GND-72, Zama GND-91, Zama GND-93,	**Diaphram and Gasket Kit** - NEW Fits C1Q-S110B, C1Q-S110C, & C1Q-S110D

Can't find what you're looking for?
Try us online to search the latest products available.

OregonProducts.com

2019 New Products

OREGON	Replaces	Description	Product Code

Carburetor Parts –Diaphragms

49-922	Zama A015002	**Metering Diaphram -** NEW Fits C1-17-01C & C1-17-02A carburetors	
49-917	Zama A015010 Zama A015018	**Metering Diaphram -** NEW Fits C1U & C1Q carburetors	
49-918	Zama A015052 Zama A015053 Zama A015046 Zama A015048 Zama A015070	**Metering Diaphram -** NEW Fits C1Q-S carburetors	
49-919	Zama A015006	**Metering Diaphram -** NEW Fits C1S carburetors	
49-920	Zama A015011 Zama A015016 Zama A015019 Zama A015041 Zama A015042 Zama A015044 Zama A015050 Zama A015077	**Metering Diaphram -** NEW Fits C1Q-S & C1U carburetors	

Carburetor Parts – Float Bowl Gaskets

49-608	Honda 16010-ZE2-812	**Float Bowl Gasket Kit -** NEW Fits GX240, GX270, GX340, & GX390	

Carburetor Parts – Primer Bulbs

49-609	Briggs & Stratton 793382	**Primer Bulb Assembly -** NEW Fits most 10D000, 120000, 12A000, 12D000, & 12C000 model	
49-611	MTD 951-10639 MTD 951-10639A MTD 951-10888B	**Primer Bulb -** NEW Fits 161-JW, 161-JWA, 165-SU, 478-SU, 483-SU, 365-SUA, 490-SU, 365-SUB, 370-SUB, & 370-SUA Height: 1", outer diameter: 1-5/8"	

OREGON	Replaces	Description	Product Code

Carburetor Parts – Primer Bulbs

49-612	Husqvarna 505 30 67-01 Shindaiwa 68206-81430 Shindaiwa 20036-81670 Shindaiwa 70029-81480 Shindaiwa 188-121 Shindaiwa 123181-09560	**Primer Bulb** - NEW Fits Red Max/Shindaiwa AH230, AH231, AH242, AH2510, AHS231, AHS242, AHS2510, DH230, DH231, HT230, HT231, LE230, P230, P231, PB230, PB3410, C242, C282, C2510, EB240S, EB480, EB500, EB630, EB802, EB2510, EB3410, T231, T242, T282, & T3410; Walbro/Echo PB260, PB261, PB500H, PB650, PE2400, PE260, PE280, PE310, PE3100, PE311, SRM3001, SRM3010, SRM310, SRM3100, SRM311, SRM3110, SRM340, GT1100, & GT2200	
49-610	Walbro AYP47721, Echo 12318110860 Echo 12318139130 Echo 3801081330 Echo 5213001400 Homelite 01183 Homelite 1183 Homelite 300780002 Homelite 308088001 Husqvarna 503936601 Husqvarna 530047721 Makita 168398-2 MTD 753-1185 MTD 791-180000B MTD 791-181558 MTD 791-181801 MTD 791-683974 MTD 791-683974B MTD 791-BQ03241 Poulan 530047721 Red Max 530047721 Ryobi 683974 Ryobi 791-683974 B Stihl 4130 350 6200 Tanaka 6685139 Walbro 188-512 Walbro 188-512-1	**Primer Bulb** - NEW Fits Husqvarna K750 & K760 cut-off saws and many chainsaws, blowers, hedge trimmers, and string trimmers Height: 1-5/16", outer diameter: 7/8"	

Chain Saw Parts – Chain Adjusters

02-137	Husqvarna 501452702	**Chain Adjuster** - NEW Fits most 42, 44, 55, 55, Rancher, 133, 234, 238, 242, 340, 345, & 350 chainsaws	
02-138	Husqvarna 501537101	**Chain Adjuster** - NEW Fits most 61, 66, 181, 266, 268, 268 Special, 272 XP, 281, & 288 chainsaws	
02-139	Husqvarna 537 07 12-01	**Chain Adjuster** - NEW Fits Husqvarna 345, 346, 350, 350, 353, 357, & 359	

2019 New Products

OREGON	Replaces	Description	Product Code

Chain Saw Parts – Chain Adjusters

02-136	Husqvarna 530 01 58-26	**Bar Adjuster Pin** - NEW Fits Husqvarna 141	

Control Cable – AYP

74-021	AYP 158152 AYP 582991501 Husqvarna 582991501	**Control Cable** - NEW Fits AYP224110X92E0, 2244110X92E2, 224111X83E, 96114001500, 96114001501, 96114011800, HD6A22HWD, PR600N22S, PR600N22SH, 96114000311, 96114000312, 96114000313, 96114000314, 96114000315, 96114000316, 96114000317, 96114000403, and 96114001200 Cable Length: 55 1/2" Conduit Length: 48"	

Control Cables – Honda

74-016	54530-VG3-D01	**Brake Cable** - NEW Fits HRR216, HRS216, HRT216	
74-018	54530-VK6-700	**Brake Cable** - NEW Fits HRC216K2, HRC216K3	

Control Cables – MTD

73-802	746-04228A	**Speed Selector Cable** - NEW For most MTD snow throwers Length: 23"	
73-800	MTD 746-04396	**Speed Selector Cable** - NEW Length: 21.5"	
74-020	MTD 946-0957	**Control Cable** - NEW For most MTD push mowers Conduit length: 37-1/4"	

OREGON	Replaces	Description	Product Code

Control Cables – MTD

74-019	MTD 946-04092 MTD 746-04092	**Deck Engagement Cable** - NEW Use with MTD riding mowers Conduit length: 26", inner wire length: 43"	

Control Cable – Toro

74-015	104-8676	**Brake Cable** - NEW For Toro 22" recycler, (2002–2009) Cable length: 58", conduit length: 53-1/2"	

Engine Parts – Kohler Gaskets

49-603	17 755 06-S	**Gasket Set** - NEW Fits CH260 & CH270	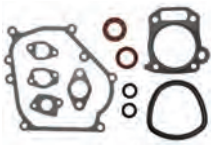
49-604	17 755 44-S	**Gasket Set** - NEW Fits CH440	
49-605	17 755 43-S	**Gasket Set** - NEW Fits CH395	
49-906	24 153 30-S	**Valve Cover Gasket** - NEW Fits CH18, CH20, CH22, CH25, CH26, CH620, CH640, CH641, CH670, CH680, CH682, CH730, CH732, CH740, CH742, CH745, CH750, CH752, CV18, CV20, CV22, CV23, CV25, CV620, CV640, CV680, CV730, CV740, CV742, ECH730, ECH749, ECV740, ECV749, SV710, SV720, SV730, SV735, & SV740	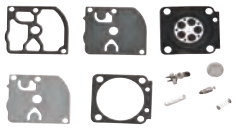
49-606	Kohler 24 153 30-S	**Gasket Valve-cover** - NEW Fits Kohler CH, CV, ECH, & SV series engines	
49-607	24 841 04-S	**Head Gasket Kit** - NEW Fits CH25, CH730, CH740, & CV25 For 25 HP engines	

Engine Parts – Kohler Miscellaneous Parts

36-416	24 462 07-S	Dust Ejector Valve - NEW Fits CH20, CH22, CH23, CH25, CH640, & CH670

2019 New Products

OREGON	Replaces	Description	Product Code	

Fuel Lines

07-145	Husqvarna 532 40 11-35	**Fuel Line** - NEW For Husqvarna Rear Emission		
07-146	Husqvarna 532 40 11-37	**Fuel Line** - NEW For Husqvarna		
07-144	Stihl 1121 358 7700	**Fuel Line** - NEW Fits Stihl 024, 026, MS240, & MS260		
07-167	Stihl 1123-141-8600	**Impulse Line, Chainsaw** - NEW Fits Stihl 021, 023, 025, MS210, MS210C, MS230, MS230C, MS250, & MS250C		
07-142	Husqvarna 581493301 Red Max 579138304 Red Max 579138306 Red Max 579138307 Red Max 581493301	**Fuel Line Kit** - NEW Fits Red Max EBZ6500, EBZ6500RH, EBZ7500, EBZ7500RH, EBZ8500, EBZ8500RH, & HBZ2610 blowers; BCZ230TS, BCZ2460S, BCZ2460TS, BCZ2650S, BCZ2650TS, & BCZ2660TS brushcutters; HBZ2650F, HEZ2460F, & HEZ2460S edgers; PSZ2460 & PSZ2465S polesaws; LRTZ2460, SGCZ2460S, SRTZ2460, SRTZ2460F & TR2350S trimmers		

Fuel Hose Clamp

07-140	Husqvarna 532 12 34-87	**Hose Clamp** - NEW For Husqvarna		

Fuel – In-Line Fuel Filters

07-141	Husqvarna 506264111	**In-Line Fuel Filter** - NEW Fits Husqvarna 36, 40, 41, 42, 45, 50, 51, 61, 66, & 394 Inner diameter: 3/16"		
07-143	Husqvarna 579 13 83-09	**Fuel Filter Assembly** - NEW Fits Red Max/Husqvarna 226R, 226RJ, & 236R		

OREGON	Replaces	Description	Product Code

Fuel–In-Tank Fuel Filter

07-163	Kohler 17 050 15-S Kohler 17 050 20-S	**Fuel Tank Filter** - NEW Fits Kohler Command Series CH260, CH270, CH395 & CH440 Length: 2-3/16", top outer diameter: 1-7/16", bottom outer diameter: 1-3/16"	

In-Line Fuel Filter

07-164	Kohler 24 050 13-S	**Fuel Filter** - NEW Fits Kohler CH18-CH25, CH620-CH740, CH750, CH940-CH1000, CV17-CV25, CV670-CV750, CV940-CV1000, LH630-LH755, LV625-LV680, SV710-SV740, & SV810-SV840 Inner diameter: 1/4"	
07-165	Kohler 25 050 22-S	**Fuel Filter** - NEW Fits KohlerCH11-CH16, CH18-CH25, CH410-CH450, CH620-CH730, CV13-CV25, CV430-CV493, CV670-CV730, SV470-SV740, TH16, TH18, TH520, & TH575 Inner diameter: 1/4"	
07-166	Honda 16910-ZE8-015	**Fuel Filter** - NEW Fits Honda engines GX100 KRS2, GX100U (KRS2, KRSB), GX160U1 VTH4, GX360K1, GX390U1 (VS49, VSD4, VTH4), GX610, GX610K1, GX610R1, GX610U1, GX620, GX620K1, GX620R1, GX620U1, GX630, GX670, GX670R, GX670U, GXV160UH2, GXV270, GXV340, GXV340A2, GXV340K1, GXV340K2, GXV340RT2, GXV340UA2, GXV340UT2, GXV390, GXV390A1, GXV390K1, GXV390RT1, GXV390UA1, GXV390UT1, GXV610, GXV610K1, GXV610R1, & GXV610U1	

Fuel – Grommets

07-147	Red Max T155185300 Red Max DP181767	**Fuel Grommet** - NEW For Red Max, Ryobi, Homelite, & Kawasaki 2 inlet	
07-148	Stihl 0000-930-2803 Stihl 0000-989-0516 Stihl 00009375004	**Grommet with Hose** - NEW Fits Stihl FS350, FS400, FS450, & FS480	

Oil Seal

36-414	Kohler 25 032 06-S	**Oil Seal** - NEW Fits Kohler CH18, CH20, CH22, CH23, CH25, CH620, & CH640	

2019 New Products

OREGON	Replaces	Description	Product Code

Grass Bag

86-002 Honda 81320-VG0-013

Grass Bag - NEW
Fits Honda HRC216 & HRC215
Frame and Hardware not included

Oil Filters

83-001 Honda 15410-MFJ-D01

Oil Filter - NEW
Fits Bobcat 453 & 463 skid steer loaders, MT50, MT52, & MT55 mini-track loaders, 319, 320D, 321, 322, 323, 324, 418, E08, E10, E14, & E16 compact excavators, 2200 & 2300 utility vehicles; Caterpillar 300.9D, 301.4C, 301.7D, 302.2D, 302.4D, & 302.7D; Ditchwitch MX9, MX15, & MX27; Hitachi Zaxis 8, ZX17U-2, ZX8-2, JLG400CRT, 330CRT, & 260MRT; John Deere 322, 330, 332, 355D, 430, & 455 diesels, 655, 755, 756, 855, & 856 tractors, 1420, 1435, F735, F912, F915, F925, F932, F935, GX355, X495, X595, X740, X744, X748, X749, & HPX diesel Gators, 2500 & 2500A diesel Tri-Plex greens mowers, 2500B & 2500E hybrid diesel riding greens mowers, 2243, 2653, & 2653A diesel professional utility mowers, 2653B, 2020, 2020A, 2030, & 2030A Pro Gators; Kubota 316, 463, B7300, B7400, B7410, BX1500, BX1800, BX1830, BX1850, BX1860, BX1880, BX2230, BX2350, BX2360, BX2370, BX2380, BX23, BX24, BX25, G1800, G1900, G2000, G2160, G3200, GF1800, GF1800E, GR2100, GR2120, KX41-3, PC09, RTV500, & RTV900,
Height: 2-1/2", outer diameter: 2-5/8", thread: 20mm x 1.5mm
Microns: 20

Can't find what you're looking for?
Try us online to search the latest products available.

OregonProducts.com

Pulleys – OEM Replacement Idlers

OREGON	Replaces	Description	Product Code
34-901	AYP 197379	**Flat Idler Pulley** - NEW Fits Craftsman 944, 917 Poulan PB19546LT Outer diameter: 5-3/8", inner diameter: 3/8", height: 1-5/8"	
34-903	AYP 532194327	**Flat Idler Pulley** - NEW Outer diameter: 3-1/2", inner diameter: 3/8", height: 1"	
34-904	AYP 539-132728	**Flat Idler Pulley** - NEW Fits Husqvarna CZ Series, RZ Series, & RZ4623 OD: 5-7/8", ID: 11/16", height: 1-59/64"	
34-318	AYP 146763	**Idler Pulley** - NEW AYP 146763 OD: 4-1/4", ID: 3/8", height: 11/16"	
34-902	AYP 194326 AYP 532194326	**"V" Idler Pulley** - NEW Fits AYP C20H42YT Outer diameter: 3-1/2", inner diameter: 5/8"	
34-905	AYP 539113962	**Pulley-Spindle** - NEW Fits Husqvarna EZ, RZ, Z Poulan PRO 461ZX OD: 5-1/2", ID: 12 pt. hex	
34-308	Cub Cadet 756-3005	**Flat Idler Pulley** - NEW Fits Exmark Vantage S series mowers; Toro commercial walk-behinds with floating decks; Grandstand mowers OD: 4-3/8", ID: 3/8", height: 7/8"	
34-301	Exmark 116-9639	**Flat Idler Pulley** - NEW Fits Exmark Lazer Z, Exmark 109-8590 & 116-9639 OD: 8-3/4", ID: 11/16", width: 1-5/8"	
34-302	Exmark 116-9639	**Flat Idler Pulley** - NEW Fits Exmark Metro, Quest, Viking, Lazer Z & Turf Tracer; Toro TimeCutter ZX, Z, ZX440, ZX480, & ZX525; Titan Z4800, Z5200, ZX5400, ZX5450, ZX6000, ZX6030, & ZX605 OD: 4-7/8", ID: 11/16", height: 3/4"	

2019 New Products

OREGON	Replaces	Description	Product Code	

Pulleys – OEM Replacement Idlers

34-308	Exmark 93-1622	**Flat Idler Pulley** - NEW Fits Exmark Vantage S series mowers OD: 4-3/8", ID: 3/8", height: 7/8"	
34-309	Exmark 1-633109 Exmark 116-4667 Exmark 1164667 Exmark 126-7685 Exmark 1267685 Husqvarna 539102610	**Flat Idler Pulley** - NEW OD: 6-3/4", ID: 11/16", height: 1-1/8"	
34-313	Exmark 126-9187 Exmark 116-4665 Exmark 126-9187	**Flat Idler Pulley** - NEW Fits Exmark Lazer Z OD: 5-3/4", ID: 11/16", width: 1-1/2"	
34-908	Hustler 786848 Husqvarna 532196104	**Pulley Flat Idler** - NEW Outer diameter: 4", center hub: 5/8"	
34-902	Husqvarna 532194326	**"V" Idler Pulley** - NEW Fits AYP C20H42YT, PB19542LT, PB19546LT, PB19H42LT, PB195H46YT, PB19H42YT, PB20H42LT, PB20H42YT, PB20H46LT, PB22H42YT, PB22H46YT, and PB22H48YT OD: 3-1/2", ID: 5/8"	
34-308	Toro 112895 Toro 93-1622 Wright Mfg. 71460006	**Flat Idler Pulley** - NEW For Exmark Vantage S series mowers; Toro commercial walk-behinds with floating decks; Grandstand mowers OD: 4-3/8", ID: 3/8", height: 7/8"	

OREGON	Replaces	Description	Product Code

Spark Plug Boots

36-425	Echo 159012-03433	**Spark Plug Boot** - NEW For Echo Chain Saws & Power Blowers	
36-423	Echo A27000013	**Spark Plug Boot** - NEW Fits Echo PB265L & PPT265S	
36-424	Echo 159012-01620	**Spark Plug Boot** - NEW Fits Echo Chainsaws 280, 300, & 3000	
36-422	Stihl 4128-405-1000	**Spark Plug Boot** - NEW Fits Stihl FS350, 400, 450, & 480	
36-427	Makita 957-604-240	**Spark Plug Boot** - NEW Fits Makita DPC series	
36-428	Red Max 505 29 88-01	**Spark Plug with Boot** - NEW Fits Red Max 143RII, 226R, 226RJ, 236R, 532RBS Brush cutter	

OREGON		Product Code

Spindles – AYP, Husqvarna

82-129 – NEW

Replaces
581650501

Description
- For Lawn Tractors
- Fits Husqvarna models, CTH 194, CTH 224T, CTCh 2646, CTH 2642TR, TC 238, & TC 242

2019 New Products

OREGON Replaces Description Product Code

Spindles – AYP, Husqvarna

82-108 – NEW

Replaces

187292	192870	539112057
192870	532187281	587125401
532192870	532187292	587253301
587125401	532192870	

Description

- For AYP 46", 48" & 54" decks
- 5 pt. star blade mount

Spindles – Cub Cadet, MTD

82-130 – NEW

Replaces
918-05137

Description

- Fits Cub CadetRZT-S54, MTD Z6600 & ZT-L54, Toro 13AX90RS848 & 13AX91RS848, Troy-Bilt Mustang 54 XP
- Height: 6-15/16", pulley outer diameter: 5-11/16"
- 6 pt. star blade mount

Spindles – Cub Cadet, MTD

82-128 – NEW

Replaces
918-04865A

Description

- Fits Cub Cadet LTX1045, LTX1046 & Z-force S 46; MTD 13AL771T004, 13AL78ST099, 13AL78ST299, 13AL795T004, 13AL795T057, 13AO785T058, 13AR91PT099, 13AR91PT299, 13AT915T004, 13AX771T004, 13AX791T031, 13AX90YT001, 13AX915T004, & 13WX791T031
- Height: 6", pulley outer diameter: 6-1/2"
- 6 pt. star blade mount
- Pulley and grease zerk included

OREGON Product Code

Spindles – Cub Cadet, MTD

82-127 – NEW

Replaces
918-06989

Description
- Fits MTD13AL78XT099, 13AL78XT299, & 13AL78XT055; Troy-Bilt TB46 & Horse XP
- Height: 6-3/4", pulley outer diameter: 6-1/4"
- Includes nut, spacer, & pulley.
- 6 pt. star blade mount
- No threads in housing, use self-tapping screws

82-131 – NEW

Replaces
918-06991

Description
- Fits most MTD 200 & 700 series mowers with 42" deck
- Height: 6-3/4", pulley outer diameter: 5-1/2"
- 6 pt. star blade mount

82-132 – NEW

Replaces
918-05078A

Description
- Fits Cub Cadet RZT-S46, MTD ZT-S46; Troy-Bilt Mustang XP 46 & Mustang Pivot S 46
- Height: 7-1/4" height, pulley outer diameter: 6-7/16"
- 6 pt. star blade mount

IMPORTANT: When installing spindles, follow all installation and maintenance instructions provided in the mowers owner/maintenance manual—including the correct torquing of the blade and pulley bolts/nuts as well as the lubrication of the spindle. Failure to do so may cause premature failure.

2019 New Products

OREGON Product Code

Spindles – Cub Cadet, MTD

82-104 – NEW

Replaces

618-06976	918-06976
618-06976A	918-06976A

Description

- Fits Cub Cadet LT42, LT42C, & LX42 with 42" deck; MTD 131PA1ZS099, CYT4220, & CYT4220SE with 42" deck
- Thread: 5/8"-18 UNG
- 6 pt. star blade mount

82-105 – NEW

Replaces

918-06977
918-06977A

Description

- Fits Cub Cadet LT46 & LX46 with 46" deck; MTD 131AQ1ZT099, 13AQA1ZT299, & CYT4622SE with 46" deck
- Thread: 5/8"-18 UNG
- 6 pt. star blade mount

82-106 – NEW

Replaces

618-06981
918-06981

Description

- Fits Cub Cadet XT1-LT50 & XT2-LX50 with 50" deck; MTD CYT5023SE with 50" deck
- Thread: 5/8"-18 UNG
- 6 pt. star blade mount

82-110 – NEW

Replaces

618-04456	918-04456	918-04461
618-04456A	918-04456A	918-04461A
618-04461	918-04456B	Toro 112-0460

Description

- Fits Cub Cadet LT1042; MTD Newer 700 series with 42" deck; Toro LX420 & LX425 (2006–2007)
- 6 pt. star blade mount

IMPORTANT: When installing spindles, follow all installation and maintenance instructions provided in the mowers owner/maintenance manual—including the correct torquing of the blade and pulley bolts/nuts as well as the lubrication of the spindle. Failure to do so may cause premature failure.

OREGON Product Code

Spindles – Cub Cadet, MTD

82-109 – NEW

Replaces

618-04636	618-04865	918-04865A
618-04636A	618-04865A	

Description

- Fits Cub Cadet LTX1045, LTX1046, & Z-force S 46; MTD 13AL771T004, 13AL78ST099, 13AL78ST299, 13AL795T004, 13AL795T057, 13AO785T058, 13AR91PT099, 13AR91PT299, 13AT915T004, 13AX771T004, 13AX791T031, 13AX90YT001, 13AX915T004, & 13WX791T031
- 6 pt. star blade mount
- Pulley and grease zerk included

Spindles – Exmark

82-101 – NEW

Replaces

120-6234

Description

- Fits ECKA30; Toro 30" TimeMaster

82-102 – NEW

Replaces

116-3344

Description

- Cutter housing with bearings
- Fits Lazer Z E-Series, Pioneer S-Series, Turf Tracer S-Series, & Vantage S-Series

82-103 – NEW

Replaces

126-4630

Description

- Cutter housing complete
- Fits RAE708, RAS710, RAS720, & RAS740

IMPORTANT: When installing spindles, follow all installation and maintenance instructions provided in the mowers owner/maintenance manual—including the correct torquing of the blade and pulley bolts/nuts as well as the lubrication of the spindle. Failure to do so may cause premature failure.

2019 New Products

OREGON Product Code

Spindles – Toro

82-130 – NEW

Replaces
918-05137

Description
- Fits Cub Cadet RZT-S54; MTD Z6600 & ZT-L54; Toro 13AX90RS848 & 13AX91RS848; Troy-Bilt Mustang 54 XP
- Height: 6-15/16", pulley outer diameter: 5-11/16"
- 6 pt. star blade mount

82-111 – NEW

Replaces
117-7439
117-7268

Description
- Fits Toro Time Cutter SS 5000 & SS 4200

IMPORTANT: When installing spindles, follow all installation and maintenance instructions provided in the mowers owner/maintenance manual—including the correct torquing of the blade and pulley bolts/nuts as well as the lubrication of the spindle. Failure to do so may cause premature failure.

OREGON | Description | Product Code

Oregon® Backpack Sprayer – Replacement Parts

605533 **Plastic Wand Kit with Nozzle, Backpack Sprayer** - NEW
Use with Oregon 518769 & 518771 backpack sprayers

605531 **Carrying Strap, Backpack Sprayer** - NEW
Use with Oregon 518769 & 518771 backpack sprayers

605532 **Filter Screen, Backpack Sprayers** - NEW
Use with Oregon 518769 & 518771 backpack sprayers

605534 **Rubber Seals Kit, Backpack Sprayers** - NEW
Use with Oregon 518769 & 518771 backpack sprayers

605535 **Seal Valve, Backpack Sprayer** - NEW
Use with Oregon 518769 & 518771 backpack sprayers

OREGON | Replaces | Description | Product Code

Springs – E-Z Rake

43-035 Honda 28442-ZH8-003
John Deere M128283
Starter Spring - NEW
Fits Honda GX100, GX120, GX160, GX200, GXV160, and 28442-ZH8-003
John Deere 180A, 180B, 180C, 220A, 220B, 220C, 260B, and 260C greensmowers

05-027 Husqvarna 577 88 47-01
String Trimmer Spring - NEW
Fits BCZ 260TS

Starter Gear

43-037 Briggs & Stratton
Starter Gear - NEW
Fits Briggs & Stratton 210700 - 312799 Series & 20700 - 252799 Series
14-tooth gear

2019 New Products

OREGON	Description	Product Code

Starter Pawls & Springs

43-035	Honda 28442-ZH8-003 John Deere M128283	**Starter Spring** - NEW Fits Honda GX100, GX120, GX160, GX200 & GXV160; John Deere 180A, 180B, 180C, 220A, 220B, 220C, 260B & 260C Greens mowers	

Starter Pulley

43-034	MTD 951-11721 MTD 751-11721	**Recoil Pulley** - NEW Fits MTD Yard Man & Yard Machine	

Steering Parts – Ball Joints

45-124	Cub Cadet 923-0448A MTD 723-0448 MTD 723-0448A MTD723-0448AP MTD 923-0448A MTD OEM-723-0448 Toro 112-0917	**Ball Joint** Right-hand thread Rubber grommet seal RH female: 7/16 -20 RH male: 3/8 -24

Steering Shafts

76-056	Cub Cadet 738-04262	**Steering Shaft** - NEW For many lawn tractors	
76-053	Husqvarna 532 15 65-43	**Steering Shaft** - NEW For many lawn tractors	
76-052	Husqvarna 532 15 65-46	**Steering Shaft** - NEW For many lawn tractors	
76-055	MTD 938-05078	**Steering Shaft** - NEW For many lawn tractors	

OREGON	Replaces	Description	Product Code	

Steering Sector / Steering Gears

76-051	MTD 717-1550 MTD 717-1550A MTD 717-1550B MTD 717-1550C MTD 717-1550D MTD 717-1550E MTD 917-1550E	**Steering Gear** - NEW For many lawn tractors 20 tooth		
76-057	MTD 617-04094	**Steering Gear Assembly** - NEW For many lawn tractors 24 tooth		
76-050	MTD 717-04943	**Pinion Gear** - NEW For many lawn tractors 11 tooth		

Can't find what you're looking for?
Try us online to search the latest products available.

OregonProducts.com

2019 New Products

OREGON Replaces Description Product Code

Oregon® Trimmer Line, Green

- Fits all standard trimmer heads
- Long-lasting premium co-polymer
- Green color
- User-friendly donut limits tangles

OREGON	Package Type	Footage	Product Code
Square .095" Gauge			
69-001 – NEW	15M Clamshell	50'	
69-004 – NEW	1/2 lb. Clamshell	120'	
Square .105" Gauge			
69-005 – NEW	1/4 lb. Clamshell	50'	
69-008 – NEW	1/2 lb. Clamshell	90'	

OREGON	Package Type	Footage	Product Code
Round .095" Gauge			
69-012 – NEW	15M Clamshell	50'	
69-010 – NEW	1/2 lb. Clamshell	140'	
Round .105" Gauge			
69-013 – NEW	15M Clamshell	50'	
69-014 – NEW	1/2 lb. Clamshell	120'	

Oregon® Trimmer Line, Red

- Fits all standard trimmer heads
- Long-lasting premium co-polymer
- Red color
- User-friendly donut limits tangles

OREGON	Package Type	Footage	Product Code
Square .095" Gauge			
69-592 – NEW	15M Clamshell	50'	
69-593 – NEW	1/2 lb. Clamshell	120'	
Square .105" Gauge			
69-594 – NEW	15M Clamshell	50'	
69-559 – NEW	1/2 lb. Clamshell	90'	

OREGON	Package Type	Footage	Product Code
Round .095" Gauge			
69-596 – NEW	15M Clamshell	50'	
69-597 – NEW	1/2 lb. Clamshell	140'	
Round .105" Gauge			
69-598 – NEW	15M Clamshell	50'	
69-599 – NEW	1/2 lb. Clamshell	120'	

OREGON	Replaces	Description	Product Code

Trimmer Parts – Echo

42-061	P021001392 P021001393	**Trimmer Guard Shield** - NEW Fits: SRM225, SRM2400, SRM230, SRM2100, SRM210, SRM260, SRM261, & SRM280 Fits 1" to 1-1/4" Shafts	

Wheels – Pneumatic Wheel Assemblies

72-342	Exmark 130-8364	**Wheel Assembly** - NEW Fits MGS481CKA36200 MGS481CKA36200 MGS481CKA36200 MGS481CKA48300 MGS481CKA48300 MGS481CKA48300 Size: 13 x 650-6 Mounted on: Steel and Rubber Ball Bearing: 1" Tread: Super Turf Hub: Offset, Steel 4 Ply	

Wheels – Semi-Pneumatic, Flat-Free Wheel Assemblies

72-341	Exmark 110-9965	**Flat Free Wheel Assembly** - NEW 11x4.00 -5 tire Thread: smooth Mounting on: Steel and Rubber Rolling Bearing: 3/4" Tread: Smooth Center Hub Hub Length: 92 mm	
72-347	Toro 105-1814 22" Recycler	**Flat Free Wheel Assembly** - NEW 8 x 1-3/4" Tread: Radial Center Hub Length: 1-3/4" Bore: 1/2"	
72-348	Toro 22" Recycler, 20012, 20016 (2002-2005) and 20019	**Flat Free Wheel Assembly** - NEW 12 x 1-3/4"-2 Bore: 1/2" Tread: Radial Hub length: 1-3/4"	

IPL'S

Mower Sulky Parts 42–43

Residential Mowers

AYP/Husqvarna/Sears 44–47

Cub Cadet 48–59

John Deere 60–83

MTD (Bolens/Troy-Bilt/YardMan). 84–87

Murray 88–91

Toro 92–99

Commercial Mowers

Bobcat 100–101

Bunton 102–107

Dixie Chopper 108–109

Encore 110–113

Exmark 114–117

Ferris 118–119

Grasshopper. 120–135

Hustler (Excel). 136–137

Scag 138–163

Honda Engines

GX160 164–165

GX240 166–167

GX340 168–169

GX390 170–171

GXV120. 172–173

GXV160. 174–175

Mower Sulky Parts List

Part No.	Description	Product Code
42-172	Bearing Cap	
42-173	Axle Bushing	
42-174	Bearing	
42-175	Clip (10-Pack)	
42-176	Pivot End Caps	
42-178	Spring (10-Pack)	

Part No.	Description	Product Code
42-183	Wheel Bearing Kit	
42-187	Bronze Pivot Bushing	
42-219	Wheel Bearing with Cap	
42-192	Bushing Sleeve	
42-218	Wheel Assembly	
42-195	Caster Cap	

42-049

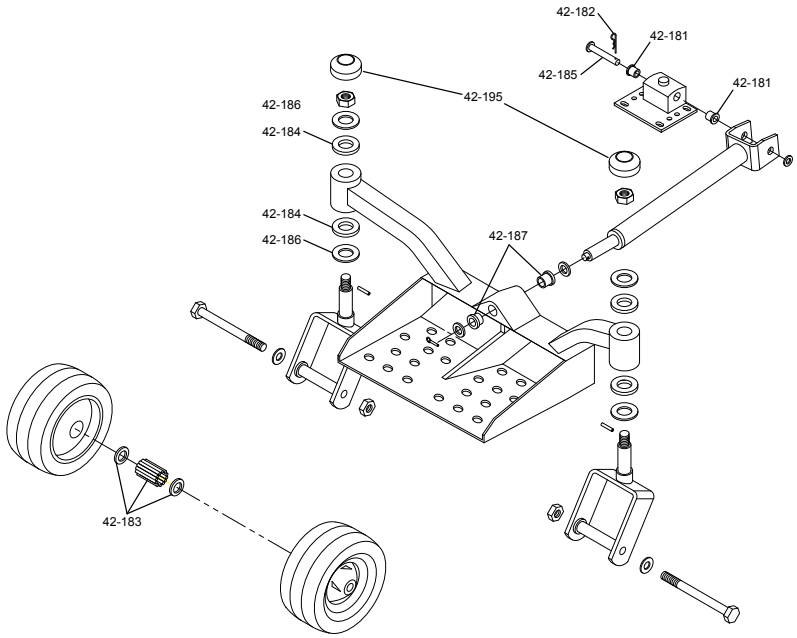

42-050

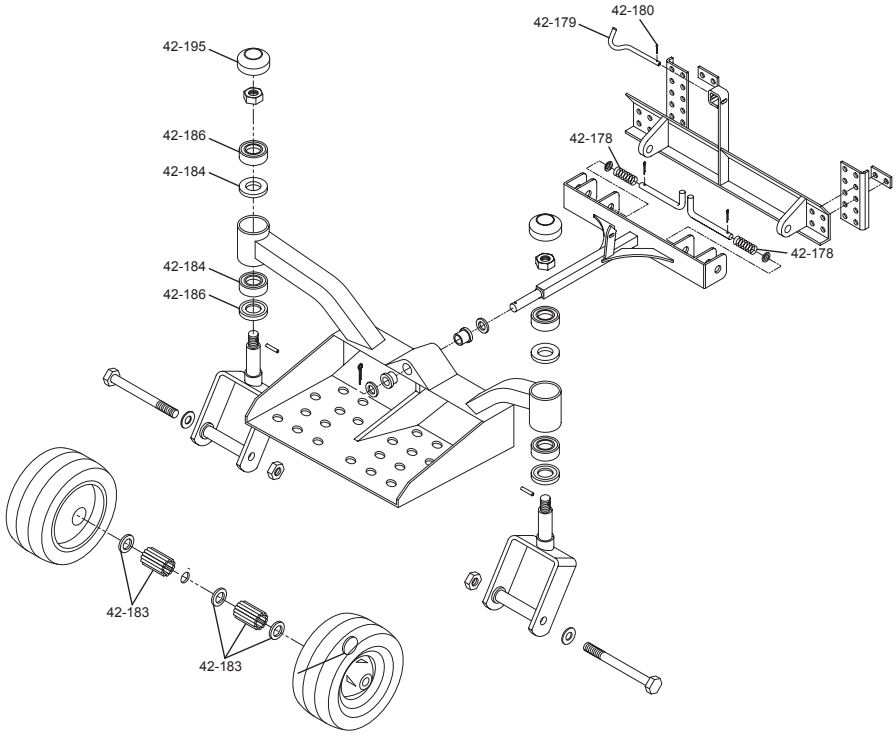

Mower Sulky Parts List

42-066

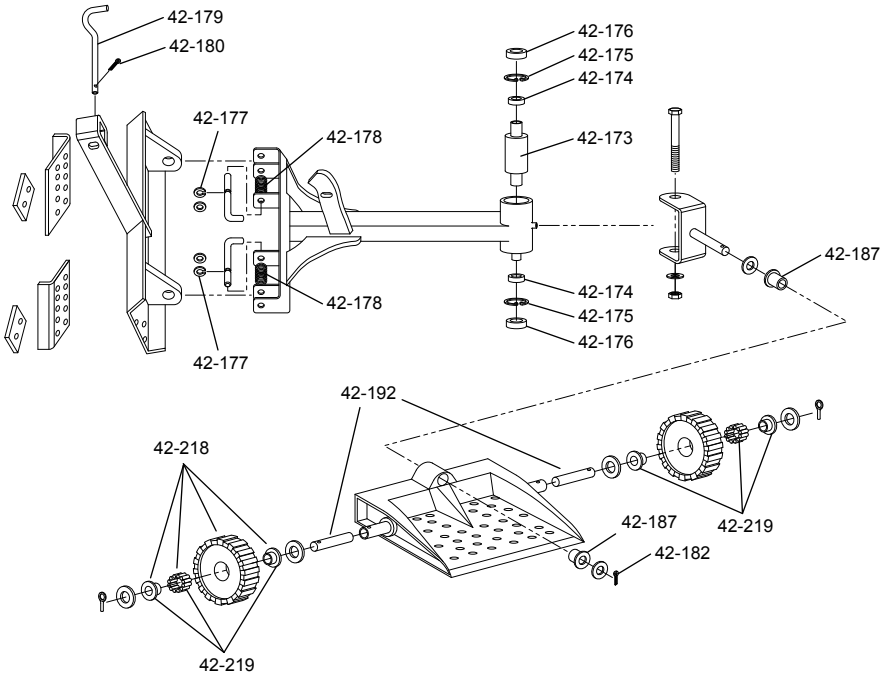

42-079

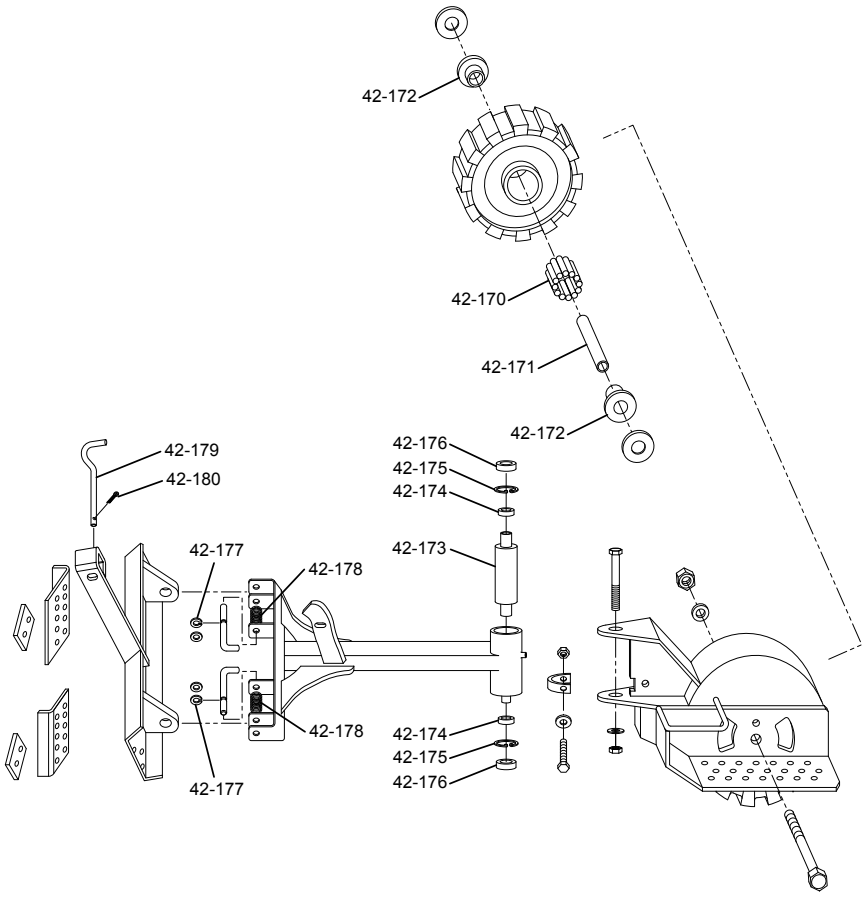

AYP 36" to 46" Decks (2 Blades)

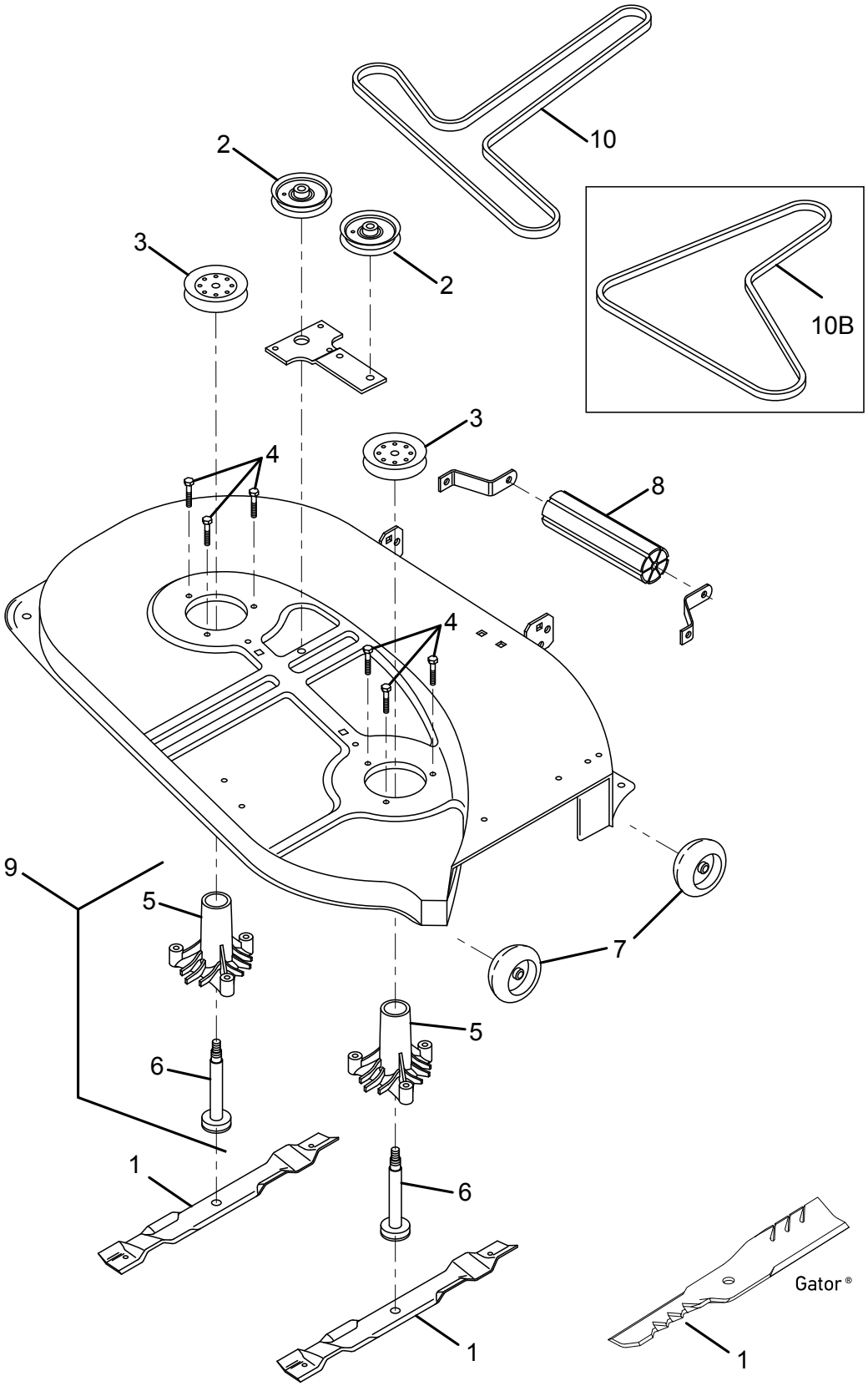

AYP 36" to 46" Decks (2 Blades)

№	Part No.	OEM No.	Description
Blades for 36" Decks with 5 pt. Star Center Hole			
1	95-036	127841	Standard, 18-3/16"
	95-026		Heavy-Duty Version of 95-036
	595-613		Gator® G5™, 18-3/16"
Blades for 38" Decks with 3/8" Round Center Hole			
1	95-031	143978X	High-Lift, 19-9/32"
Blades for 38" Decks with 5 pt. Star Center Hole			
1	195-033	138497	100-Series, 19-9/32"
	95-038		Heavy-Duty Version of 95-033
	95-047	131322	High-Lift, 19-9/32"
	95-601		Gator G3™, 19-9/32"
	595-601		Gator G5, 19-9/32"
Blades for 42" Decks with 5 pt. Star Center Hole			
1	195-032	138791	100-Series, 21"
	195-039		Heavy-Duty Version of 95-032
	195-048	138791	100-Series, Sand 21"
	195-005	134149	100-Series, Mulching 21"
	96-900		Gator G3, 21"
	596-900		Gator G5, 21"
Blades for 46" Decks with 5pt. Star Center Hole			
1	195-070	405380	100-Series, High-Lift 22-7/8"
	95-074	403107	Mulching, 22-7/8
	95-370		Low Lift, 22-7/8"
	96-370		Gator G3, 22-7/8"
	596-370		Gator G5, 22-7/8"
Replacement Parts			
2	78-051	187584	Flat Idler Pulley, OD: 5-1/2", FOD: 4-3/4", W: 1-9/16", FW: 1-3/16", ID: 3/8"
	78-052	175820	Flat Idler Pulley, OD: 4-1/2", FOD: 3-5/8", W: 1", FW: 5/8", ID: 3/8"
	78-053	173901	Flat Idler Pulley, OD: 4-5/16", FOD: 3-1/2", W: 1-3/8", FW: 1", ID: 3/8"
	78-054	173437	Flat Idler Pulley, OD: 3-3/4", FOD: 2-7/8", W: 1-3/8", FW: 3/4, ID: 3/8"
	34-046	173438	Flat Idler Pulley, OD: 3-7/8", FOD: 3-1/16", W: 1", FW: 3/4", ID: 3/8"
	78-043	105313X	Flat Idler Pulley, OD: 4-1/4", FOD: 3-3/4", W: 1-5/16", FW: 7/8", ID: 3/8"
	78-013	177968	Flat Idler Pulley, OD: 4", FOD: 3-1/16", W: 1", FW: 3/4", ID: 3/8"
	78-014	189993	V-Idler Pulley, OD: 4-1/2", W: 13/16", ID: 3/8"
	34-049	139245	V-Idler Pulley, OD: 3-1/2", W: 13/16", ID: 3/8"
3	44-370	153535	Spindle Pulley, SpLined, OD: 5"
4	02-304	173984	Self Tapping Bolt, 5/16-18" x 1-1/4"
	02-301	17490612	Self Tapping Bolt, 3/8-16" x 1"
5	82-220	128774	Spindle Housing
	82-024		Spindle Housing, Heavy-Duty Version of 82-220
6	85-017	137646	Spindle Shaft with Bearings
	45-257		Top Bearing (Not Shown)
	45-259		Lower Bearing (Not Shown)
	04-001		Spindle Pulley Nut (Not Shown)
7	72-312	165746	Gauge Wheel, 5" x 2"
8	72-313	176066	Roller 7" x 3"
9	82-225	130794	Spindle Assembly
	82-014		Spindle Assembly, Heavy-Duty Version of 82-225
10	75-936	131290	Deck Belt, 38" Cut, 1/2" x 88-1/4"
	75-099	144200	Deck Belt, 38" & 42" Cut, 1/2" x 88-3/8"
	75-106	130969	Deck Belt, 42" Cut (1992–1999), 1/2" x 92-1/4"
	75-197	144959	Deck Belt, 42" Cut, 1/2" x 95-3/8"
	75-913	174883	Deck Belt, 42" Cut (2002 & Newer), 5/8" x 97-3/16"
10B	75-097	131264	Deck Belt, 36" Cut (1992–1999), 1/2" x 78-3/8"
	75-107	106085X	Deck Belt, 38" Cut with Electric PTO, 1/2" x 79"

AYP 44", 46", 48", 50", & 54" Decks (3 Blades)

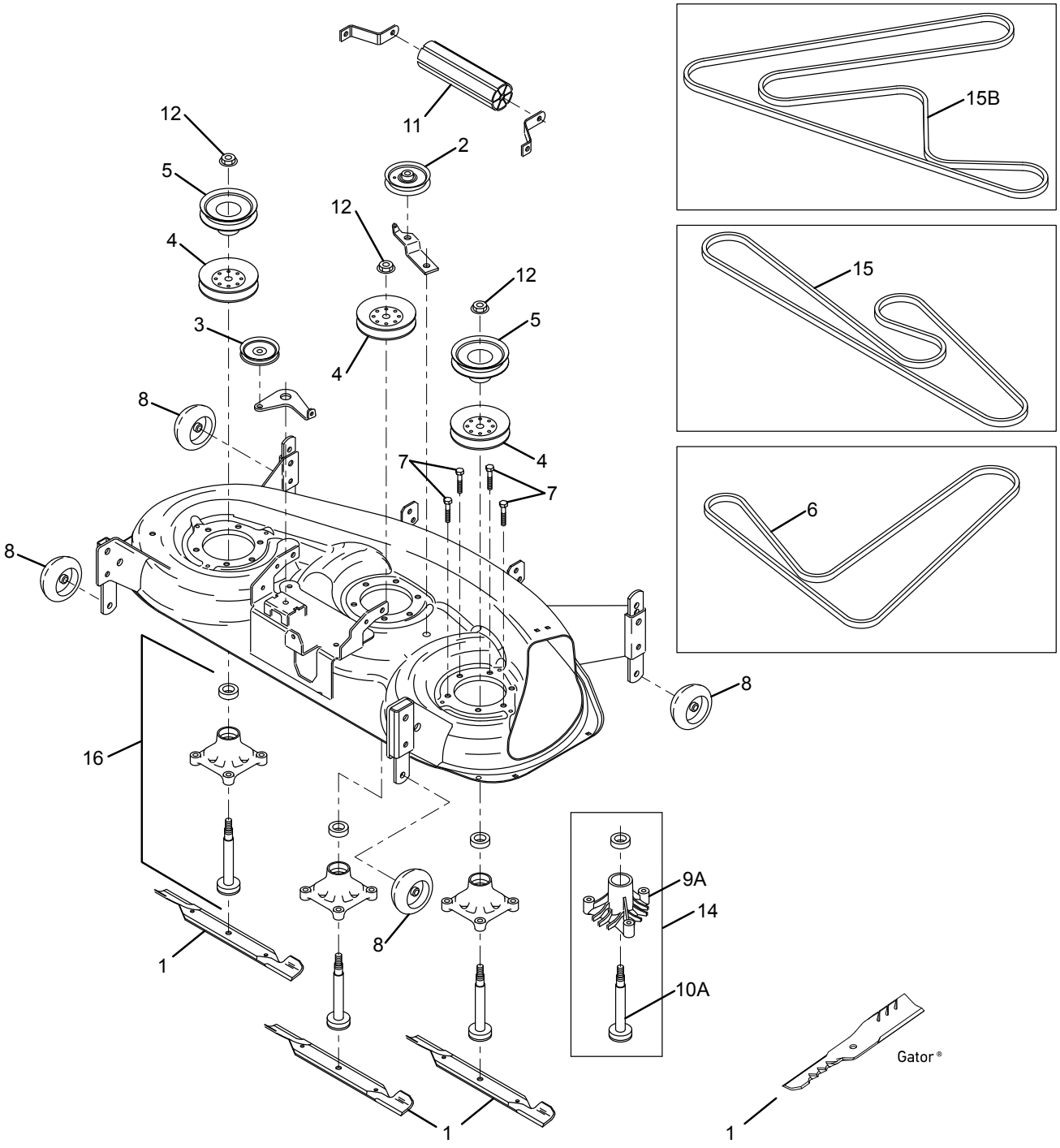

AYP 44", 46", 48", 50", & 54" Decks (3 Blades)

№	Part No.	OEM №	Description
Blades for 38" Cut Decks with 3/8" Round Center Hole			
1	95-014	106635X	Standard, 15-11/32"
	95-607		Gator® G3™
Blades for 44" Decks with 5 pt. Star Center Hole			
1	95-006	130652	Standard, 15-3/8"
	95-049	130652	Heavy-Duty Version of 95-006
Blades for 46" Decks with 5 pt. Star Center Hole			
1	95-045	152433	Mulching, 15-1/2"
	95-052	157033	High-Lift Mulching, 15-1/2"
	95-614		Gator G3, 15-1/2"
	595-614		Gator G5™, 15-1/2"
Blades for 48" Decks with 5 pt. Star Center Hole			
1	195-062	180054	100-Series, 16-5/8"
	96-615		Gator G3, 16-5/8"
	596-615		Gator G5, 16-5/8"
Blades for 50" Decks with 5 pt. Star Center Hole			
1	95-018	137380	High-Lift, 17-3/8"
	95-050		Heavy-Duty Version of 95-018
	95-609		Gator G3, 17-3/8"
	595-609		Gator G5, 17-3/8"
Blades for 54" Decks with 5pt. Star Center Hole			
1	195-072	187254	100-Series, 18-1/2"
	95-082	187255	Mulching, 18-1/2"
	95-605		Gator G3, 18-1/2"
	595-605		Gator G5, 18-1/2"
Replacement Parts			
2	78-051	177284	Flat Idler Pulley, OD: 5-1/2", FOD: 4-3/4", W: 1-9/16", FW: 1-3/16", ID: 3/8"
	78-052	175820	Flat Idler Pulley, OD: 4-1/2", FOD: 3-5/8", W: 1", FW: 5/8", ID: 3/8"
	78-053	173901	Flat Idler Pulley, OD: 4-5/16", FOD: 3-1/2", W: 1 -3/8", FW: 1", ID: 3/8"
	78-054	173437	Flat Idler Pulley, OD: 3-3/4", FOD: 2-7/8", W: 1-3/8", FW: 3/4", ID: 3/8"
	34-046	173438	Flat Idler Pulley, OD: 3-7/8", FOD: 3-1/16", W: 1", FW: 3/4", ID: 3/8"
	78-043	105313X	Flat Idler Pulley, OD: 4-1/4", FOD: 3-3/4", W: 1-5/16", FW: 7/8", ID: 3/8"
	78-013	177968	Flat Idler Pulley, OD: 4", FOD: 3-1/16", W: 1", FW: 3/4", ID: 3/8"
3	78-014	189993	V-Idler Pulley, OD: 4-1/2", W: 13/16", ID: 3/8"
	34-049	139245	V-Idler Pulley, OD: 3-1/2", W: 13/16", ID: 3/8"
4	44-370	153535	Spindle Pulley, Splined, OD: 5"
5	44-302	136572	Driven Pulley, OD: 5"
6	75-169	139573	Deck Drive Belt, 46" & 50" Decks, 1/2" x 83-3/4"
	75-170	148763	Deck Drive Belt, 46" & 50" Decks, 1/2" x 85-7/8"
	75-097	131264	Deck Drive Belt, 44" (1992-1999), 1/2" x 78-3/8"
7	02-304	173984	Self Tapping Bolt, 5/16-18 x 1-1/4"
	02-301	17490612	Self Tapping Bolt, 3/8-16 x 1"
8	72-312	165746	Gauge Wheel, 5" x 2"
9A	82-221	137152	Housing Only, for Oregon® 82-510
10A	85-023	137553	Spindle Shaft with Bearings for Oregon 82-510
11	72-313	176066	Roller, 7" x 3"
12	04-001	129729	Spindle Nut for Pulley
14	82-510	143651	Spindle Assembly, 44" & 50" Decks for Blades with Star Hole
15	75-197	144959	Deck Belt, 46" & 50" Decks, 1/2" x 95-3/8"
	75-654	180808	Deck Belt, 48" Cut, 5/8" x 88-3/4"
	75-167	138255	Deck Belt, 50" Cut, 1/2" x 95-1/4"
	75-936	131290	Deck Belt, 44" Cut, 1/2" x 88-1/4"
15B	75-810	191273	Deck/Spindle Belt, 54" Decks, 5/8" x 142-1/2"
16	82-012	174356	Spindle Assembly, 48" Decks (After 2001)
	82-029	187292	Spindle Assembly, 54" Decks

Cub Cadet LT1000, SLT1500, GT1500, ZTR, & Z-Force — 42" Decks LTX1045 & LTX1046, 46" Decks (2 Blades)

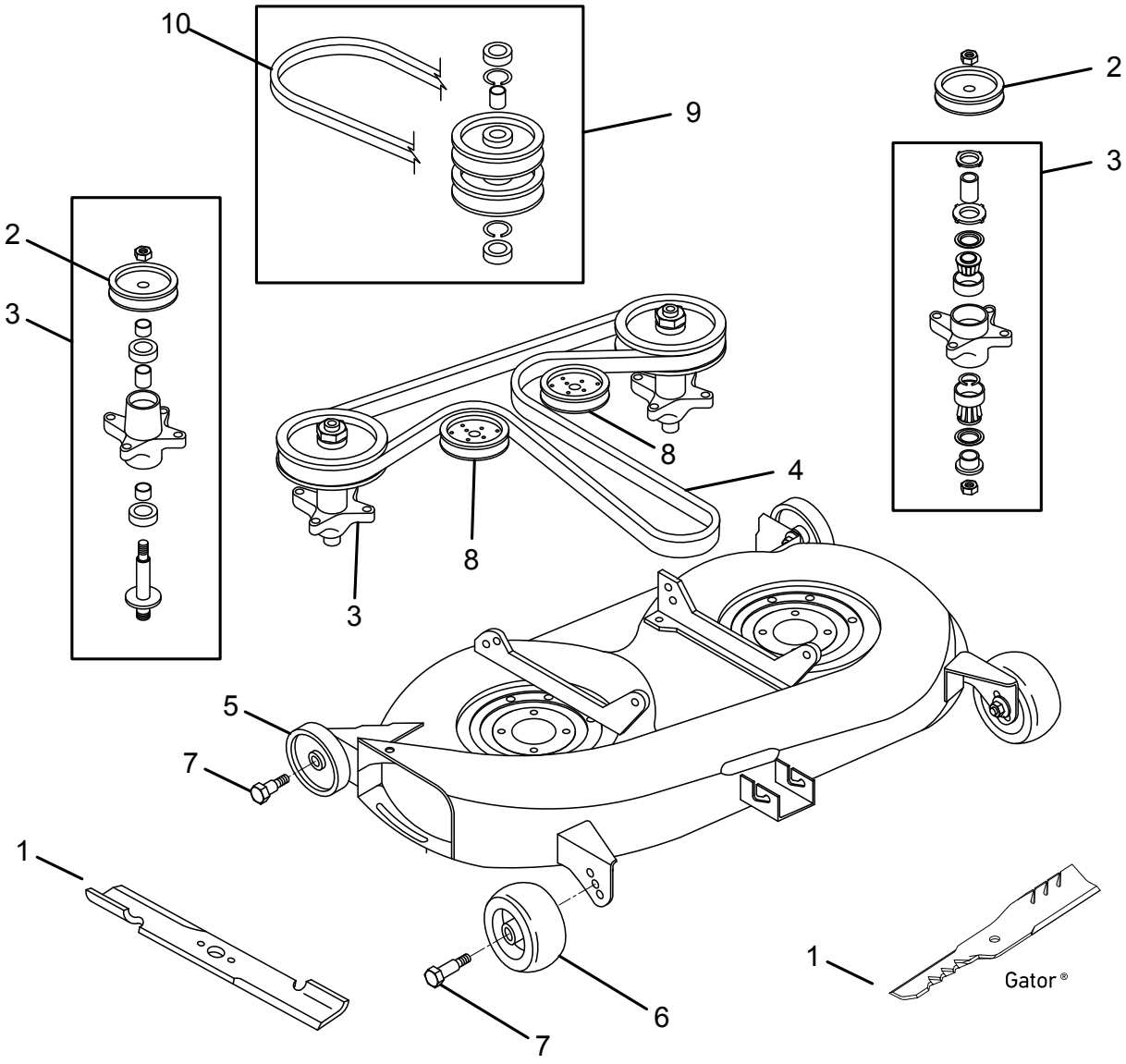

Cub Cadet LT1000, SLT1500, GT1500, ZTR, & Z-Force — 42" Decks LTX1045 & LTX1046, 46" Decks (2 Blades)

№	Part No.	OEM No.	Description
Blades for 42" Decks Used on LT1042 with 3/4" Round Center Hole			
1	91-058	742-3033	Mulching, 21-1/8"
	91-635		Gator® G3™, 21-1/8"
	591-635		Gator G5™, 21-1/8"
Blades for 42" Decks Used on 2150 & 2155 with 3/4" Round Center Hole			
1	91-332	742-04101	Low-Lift, 21-1/4"
	96-350		Gator G3, 21-1/4"
Blades for 42" Decks Used on LT1040, LT1042, & RZT42 with 6 pt. Star Center Hole			
1	98-090	742-04126	Mulching, 21-1/8"
Blades for 46" Decks Used on LXT1045, LT1046, & LXT1046VT with 6 pt. Star Center Hole			
1	98-096	942-04244	High-Lift, 23-1/4"
	96-401		Gator G3, 23-1/4"
Replacement Parts			
2		756-3106	Spindle Pulley, LT1018, Z-FORCE 42 with Star Blade Hole
		756-1227	Spindle Pulley, LT1042 with Star Blade Hole
		756-04086	Spindle Pulley, LT1042 with Round Blade Hole
		756-1188	Spindle Pulley, RZT42 with Star Blade Hole
3	82-411	618-3129C	Spindle Assembly, LT1018, Z-FORCE 42 with Star Blade Hole
	82-408	618-0659	Spindle Assembly, LT1042 with Star Blade Hole
	82-407	618-04461	Spindle Assembly, LT1042 with Star Blade Hole (Late Production)
	82-402	618-04124A	Spindle Assembly, LT1042 with Round Blade Hole
	82-405	618-0427	Spindle Assembly, RZT42 with Star Blade Hole
4	75-677	754-0498	Deck Drive Belt, LT1018, 1/2" x 67-1/4"
	75-813	754-04060B	Deck Drive Belt, LT1042, 1/2" x 96-5/8"
	75-714	754-04045	Deck Drive Belt, LT1042 RZT 42, 1/2" x 109-1/4"
		1009907	Deck Drive Belt, Z-Force 42
5	72-015	734-04039	Gauge Wheel
	72-025	734-04155	Gauge Wheel
6	72-318	734-0973	Gauge Wheel, 4-3/4" x 1-3/8", ID: 1/2", Offset Hub: 1-3/8"
7	04-150	738-0373	Gauge Wheel Bolt
8	34-041	756-0627B	Flat Idler, 3.5"
	78-046	756-1229	Flat Idler, 4"
	34-205	756-0542	Flat Idler
9	44-103	756-1202	Double Pulley with Bearings, fits PTO LT1018
		1009904	Double Pulley with Bearings, fits PTO Z-Force 42
10	75-676	754-0497	PTO Drive Belt, fits LT1018, 1/2" x 60-3/8"

Cub Cadet LT1000, SLT1500, GT1500, RZT, & Z-Force — 44", 46", & 48" with 3 Blades

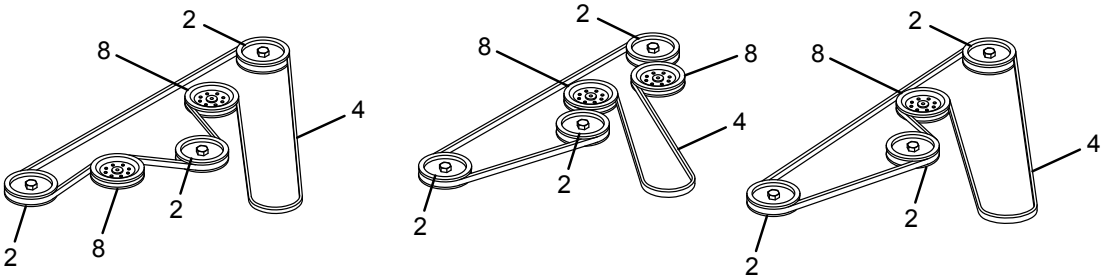

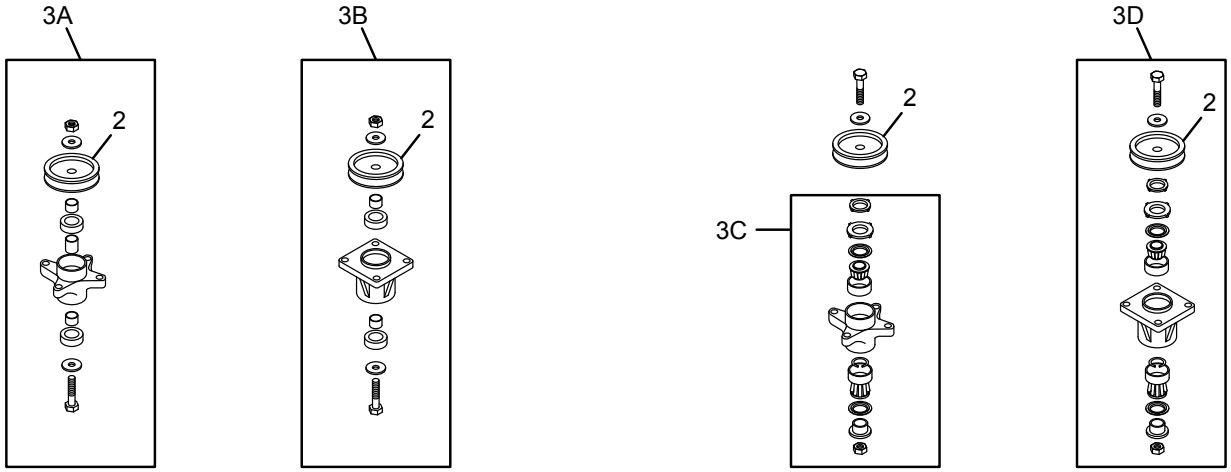

For Blades with Star Center Hole

For Blades with Round Center Hole

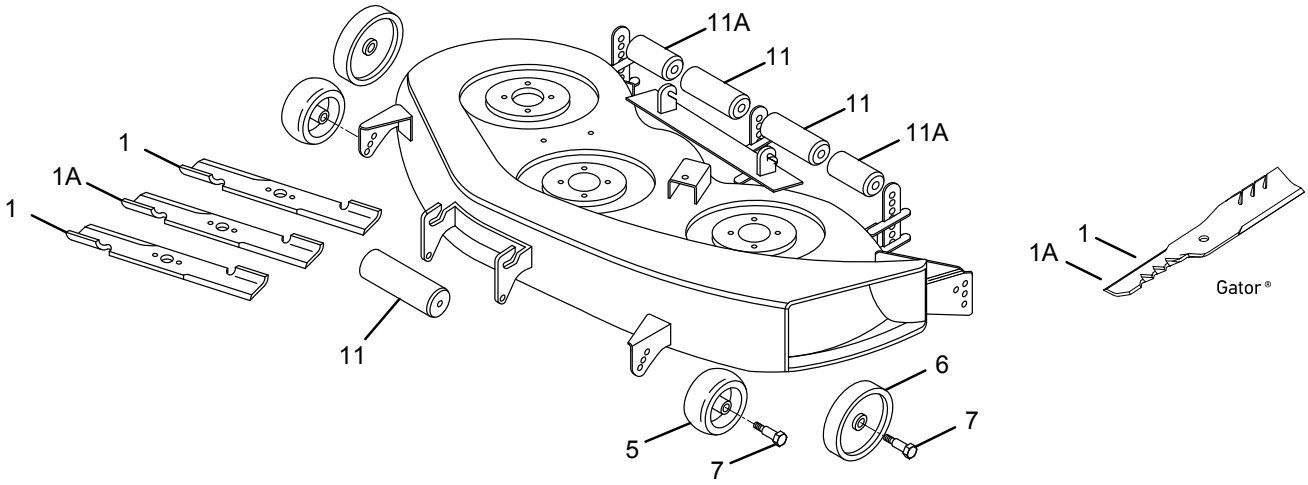

Cub Cadet LT1000, SLT1500, GT1500, RZT, & Z-Force — 44", 46", & 48" with 3 Blades

№	Part No.	OEM No.	Description
Blades for 44" Decks Used on Z-FORCE with 3/4" Round Center Hole			
1	98-080	1008616	High-Lift, 15-15/16"
Blades for 46" Decks Used on LT1046 & i1046 with 6 pt. Star Center Hole			
1	98-085	742-04125	Mulching (L & R Blade), 16-1/4"
1A	98-084	742-04124	Mulching (Center Blade), 14-7/8"
Blades for 46" Decks Used on Garden Tractors with 3/4" Round Center Hole			
1	91-330	742-04125	Bagging (L & R Blade), 16-1/4"
	98-082	742-04125	Mulching (L & R Blade), 16-1/4"
1A	91-327	742-04124	Bagging (Center Blade), 14-7/8"
	98-083	742-04124	Mulching (Center Blade), 14-7/8"
Blades for 48" Decks Used on Z-FORCE with 3/4" Round Center Hole			
1	98-081	1004772	High-Lift, 16-1/2"
	96-381		Gator G3, 16-1/2"
Blades for 48" Decks Used on Lawn Tractors with 3/4" Round Center Hole			
1	91-333	742-3019	Low-Lift, 16-1/2"
	91-056	742-3025	High-Lift, 16-1/2"
	90-697		Gator G3, 16-1/2"
	596-330		Gator G5, 16-1/2"
Replacement Parts			
3C	82-406	618-04394	Spindle Assembly, Z-Force, 44" Cut, Kohler Engine 50" & 60" (Round Blade Hole, Pulley & Shaft Not Included)
	82-411	618-3129B	Spindle Assembly, Z-Force, 44" Cut, Briggs Engine (Round Blade Hole, Pulley & Shaft Not Included)
3B	82-409	618-0660	Spindle Assembly, LT1000, 46" Cut with Star Blade Hole (Pulley & Shaft Included)
3D	82-401	618-04123B	Spindle Assembly, LT1000, 46" Cut with Round Blade Hole (Pulley & Shaft Included)
		1006470	Spindle Assembly, Z-FORCE, 48" with Round Blade Hole (Pulley & Shaft Included)
4	75-811	2000103	Deck Drive Belt, Z-Force, 44" Cut with Kohler Engine, 1/2" x 81-1/2"
	75-403	754-3039	Deck Drive Belt, Z-Force, 44" Cut with Briggs Engine (Round Blade Center Hole), 1/2" x 103"
	75-706	754-04033	Deck Drive Belt, LT1022, 1045, & 1046, 46" Cut, 1/2" x 118-5/16"
	75-815	754-04118	Deck Drive Belt, LT1045 & 1046, 46" Cut, 1/2" x 122-1/2"
	75-816	754-04153	Deck Drive Belt, LT1045 & 1046, 46" Cut, 1/2" x 122-1/8"
	75-808	1000399	Deck Drive Belt, Z-Force, 48" Cut, 1/2" x 107-1/8"
5	72-025	734-04155	Gauge Wheel
	72-027	703-1890	Gauge Wheel
	72-015	734-04039	Gauge Wheel
6	72-318	734-0973	Gauge Wheel
7	04-150	738-0373	Gauge Wheel Bolt
	04-163	738-3056	Gauge Wheel Bolt
8	78-046	756-1229	Flat Idler
	34-041	756-0627B	Flat Idler
	34-201	1004101	Flat Idler
	34-206	756-3062	Flat Idler
10	75-818	1002391	PTO Drive Belt, Z-Force 44
	75-820	50441	PTO Drive Belt, Z-Force 44, 48"
11		731-0335	Deck Roller
	72-319	1000385	Deck Roller
	72-319	731-3005	Deck Roller
11A		1001169	Rear Deck Roller, Short

Cub Cadet LT1000, SLT1500, GT1500, RZT, & Z-Force — 50", 54", & 60" with 3 Blades

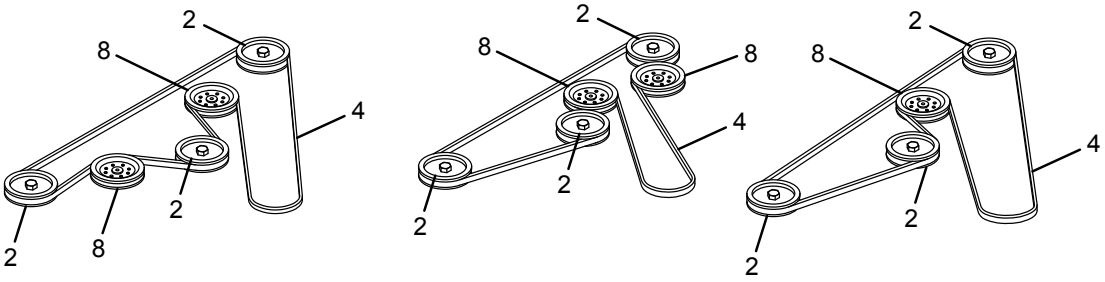

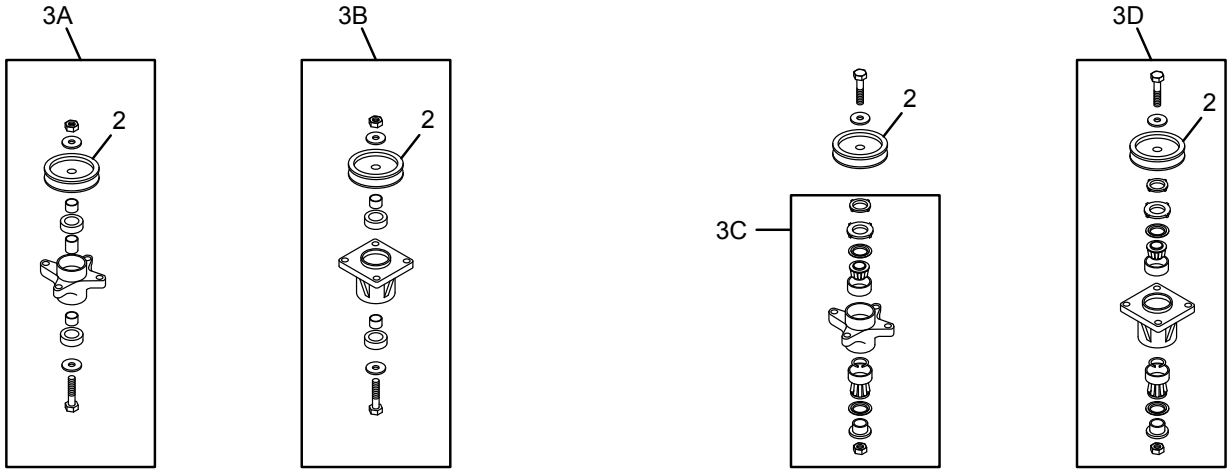

For Blades with Star Center Hole

For Blades with Round Center Hole

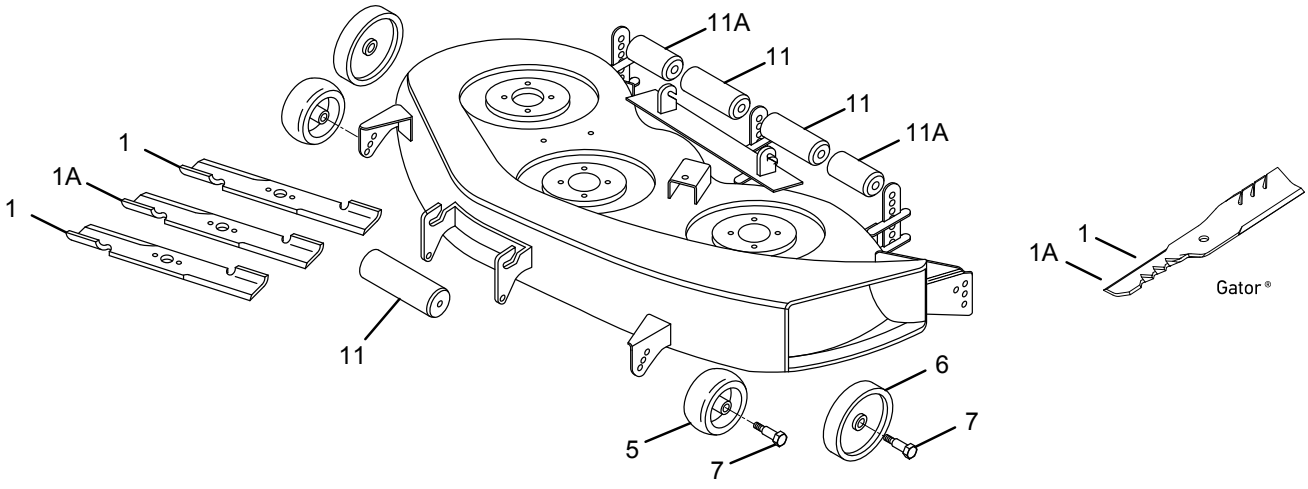

Cub Cadet LT1000, SLT1500, GT1500, RZT, & Z-Force — 50", 54", & 60" with 3 Blades

№	Part No.	OEM No.	Description
Blades for 50" Decks Used on LT1024 & LT1050 with 3/4" Round Center Hole			
	98-087	742-04047	Standard, 17-7/8"
1	96-387		Gator® G3™, 17-7/8"
	596-387		Gator G5™, 17-7/8"
Blades for 50" Z Force Decks Used on LT1050 with 6 pt. Star Center Hole			
	198-086	742-04053B	100-Series, 17-7/8"
1	91-938	742-04053B	Gator G3, 17-7/8"
	591-938	742-04053B	Gator G5, 17-7/8"
Blades for 50" Z Force Decks Used on M-50-KHS with 3/4" Round Center Hole			
1	92-015	1010168	Standard, 17-7/8"
	592-015		Gator G5, 17-7/8"
Blades for 54" Decks Used on SLT1554 & GT1554 with 6 pt. Star Center Hole			
	98-072	742-0677	High-Lift, 18-1/2"
1	98-672		Gator G3, 18-1/2"
	598-672		Gator G5, 18-1/2"
	398-672		Gator G6, 18-1/2"
Blades for 54" Decks Used on Garden Tractors with 3/4" Round Center Hole			
	91-440	742-3013	High-Lift, 18-1/2"
1	96-333		Gator G3, 18-1/2"
	596-333		Gator G5, 18-1/2"
Blades for 54" Decks Used on M54 Tank with 3/4" Round Center Hole			
	98-091	2005018	High-Lift, 19"
1	96-351		Gator G3, 19"
	596-351		Gator G5, 19"
Blades for 60" Decks Used on Z-Force 60 with 3/4" Round Center Hole			
1	91-144	1004719	High-Lift, 20-1/2"
	96-677		Gator G3, 20-1/2"
Blades for 60" Decks Used on Tank & RECON with 3/4" Round Center Hole			
	98-071	2005019	High-Lift, 21"
1	96-300		Gator G3, 21"
	596-300		Gator G5, 21"
Replacement Parts			
3C	82-406	618-04394	Spindle Assembly, Z-Force, Kohler Engine 50" & 60" (Round Blade Hole, Pulley & Shaft Not Included)
3A	82-403	618-04126	Spindle Assembly, LT1050, SLT1550, & RZT 50" (Star Blade Hole, Pulley & Shaft Included)
	82-403	618-04126	Spindle Assembly, SLT1554, 54" Cut (Star Blade Hole, Pulley & Shaft Included)
3C	82-412	618-04129	Spindle Assembly, LT1000, 50" Cut with Round Blade Hole (Pulley & Shaft Included)
3A	82-519	618-0671	Spindle Assembly, GT1554, 54" Cut (Star Blade Hole, Pulley & Shaft Included)
	75-716	754-04048	Deck Drive Belt, LT1024, 50" Cut, 5/8" x 131-5/16"
	75-814	754-04077	Deck Drive Belt, LT1050 & SLT1550, 50" Cut, 5/8" x 133-13/16"
4	75-710	754-04044	Deck Drive Belt, RZT, 50" Cut, 1/2" x 134"
	75-491	2000653	Deck Drive Belt, Z-Force, 50" Cut, 1/2" x 91"
	75-994	754-04083	Deck Drive Belt, SLT1554, 54" Cut, 5/8" x 138-3/16"
	75-994	754-0642	Deck Drive Belt, GT1554, 54" Cut, 5/8" x 138-3/16"
	72-025	734-04155	Gauge Wheel
5	72-027	703-1890	Gauge Wheel
	72-015	734-04039	Gauge Wheel
6	72-318	734-0973	Gauge Wheel
7	04-150	738-0373	Gauge Wheel Bolt
	04-163	738-3056	Gauge Wheel Bolt
	78-046	756-1229	Flat Idler
8	34-041	756-0627B	Flat Idler
	34-201	1004101	Flat Idler
	34-206	756-3062	Flat Idler
10	75-821	1005011	PTO Drive Belt, Z-Force 50
	75-822	1005012	PTO Drive Belt, Z-Force 60
		731-0335	Deck Roller
11	72-319	1000385	Deck Roller
	72-319	731-3005	Deck Roller
11A		1001169	Rear Deck Roller, Short

Cub Cadet LT1000, SLT1500, GT1500, ZTR, & Z-Force

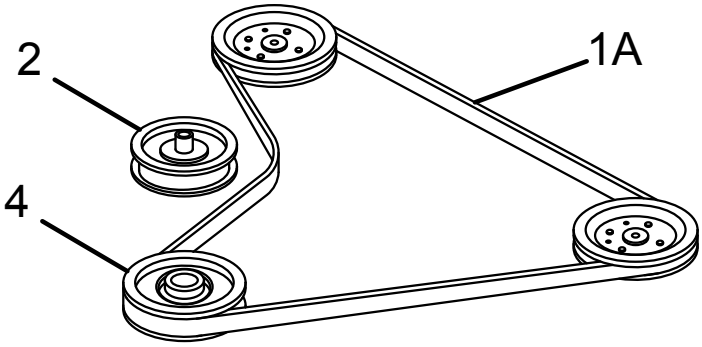

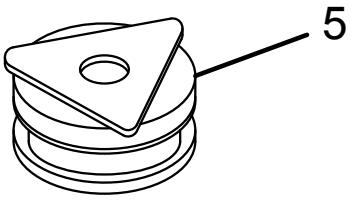

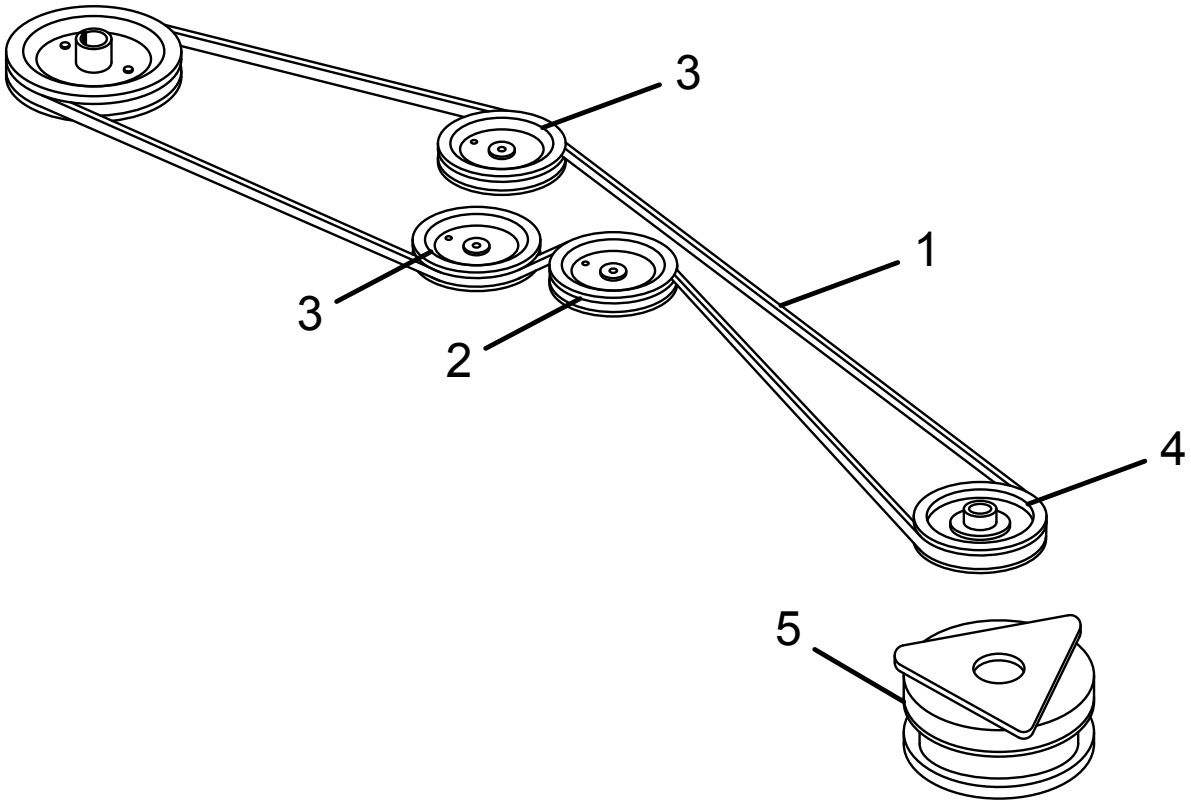

Cub Cadet LT1000, SLT1500, GT1500, ZTR, & Z-Force

№	Part No.	OEM No.	Description
1	75-823	754-0640	Drive Belt – Traction, fits LT1018 & LT1022, 1/2" x 79-3/8"
	75-824	754-0461	Drive Belt – Traction, fits LT1042, 1045, 1046, 1050, SLT1550, & 1554, 1/2" x 78-1/8"
	75-021	754-0349	Drive Belt – Traction, fits GT1554, 1/2" x 79-5/16"
1A	75-886	754-04043	Drive Belt – Traction, for RZT Series, 1/2" x 58-1/8"
	75-798	1008349	Drive Belt – Traction, for Z-Force Series, 1/2" x 56-3/8"
2	78-028	756-0981A	Flat Idler, 2-3/4" X
	34-029	30782	Flat Idler
	78-028	756-04224	Flat Idler, 2-3/4" X
	34-041	756-0627	Flat Idler, 3-1/2" X
3	34-030	756-0116	V-Idler, 3"
	34-030	756-04209	V-Idler, 3"
4		756-0978A	Engine Pulley, fits LT1000, SLT1500, GT1500, & RZT (with 3-1/2" Pulley)
		756-04102A	Engine Pulley, fits LT1000, SLT1500, GT1500, & RZT (with 4" Pulley)
		1008808	Engine Pulley, for Z-Force
5	33-125-1	717-1708	PTO Clutch, fits LT1018
	33-133	717-04163	PTO Clutch, fits LT1042
		717-04183	PTO Clutch, fits RZT42, RZT50, & Z-Force 60 (Ogura)
		717-04127	PTO Clutch, fits RZT17 & RZT22 (Ogura)
	33-134	717-04174	PTO Clutch, fits LT1045, LT1050, & SLT1550
	33-139	717-04080	PTO Clutch, fits LT1022, LT1024, & LT1046
	33-104	717-1774B	PTO Clutch, fits SLT1554 & GT1554
		2002160	PTO Clutch, for Z-Force 60 (with Kawasaki Engine) (Ogura)
		1008434	PTO, for Z-Force (Ogura)
		1008544	PTO, for Z-Force (Ogura)

Cub Cadet LT1000, SL1500, GT1500, ZTR, & Z-Force

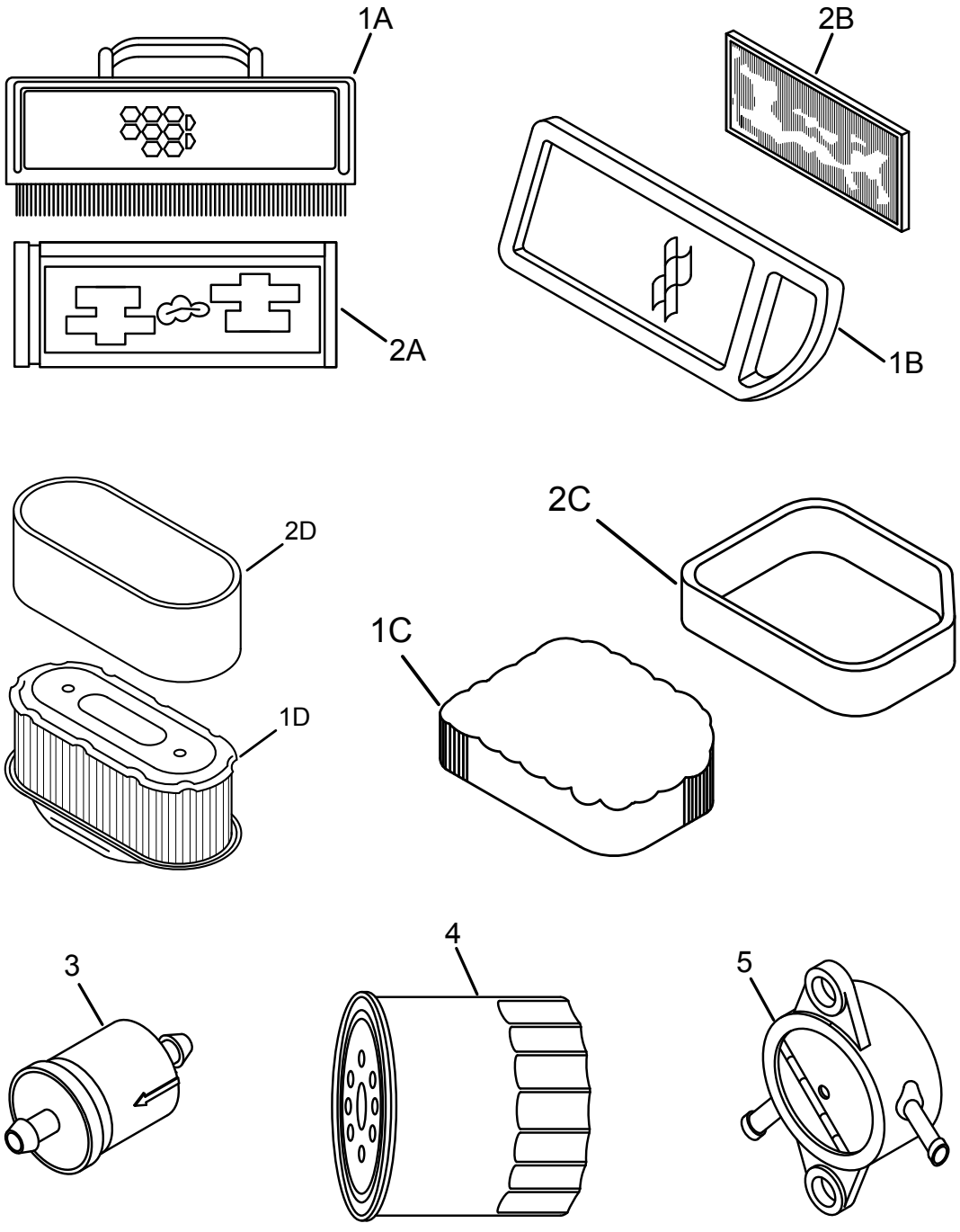

Cub Cadet LT1000, SLT1500, GT1500, ZTR, & Z-Force

№		OEM №	Description
1A	30-032	499486	Air Filter (Non-Washable), for Briggs & Stratton Twin Cylinder
	30-136	698754	Air Filter (Washable), for Briggs & Stratton Twin Cylinder
1B	30-074	698083	Air Filter (Non-Washable), for Briggs & Stratton Single Cylinder
	30-122	697153	Air Filter (Washable), for Briggs & Stratton Single Cylinder
1C	30-130	32-083-03S	Air Filter, for Kohler Courage Twin Cylinder
1D	30-163	11013-7027	Air Filter, for Kawasaki (Internally Vented Carburetors)
	30-054	11013-7024	Air Filter, for Kawasaki (Externally Vented Carburetors)
2A	30-914	273638	Pre Filter, for Briggs & Stratton Twin Cylinder (Use with Oregon® 30-032 & 30-9xx)
2B	30-076	697015	Pre Filter, for Briggs & Stratton Single Cylinder (Use with Oregon 30-074 & 30-9xx)
2C	30-159	32-083-06S	Pre Filter, for Kohler Courage Twin Cylinder (Use with Oregon 30-130)
2D	30-527	11013-7009	Pre Filter, for Kawasaki (for 30-054)
3	07-064	695666	Fuel Filter, for Briggs & Stratton 30 Micron
	07-107	691035	Fuel Filter, for Briggs & Stratton, 80 Micron
	07-332	25-050-22S	Fuel Filter, for Kohler – 51 Micron
	07-063	49019-7001	Fuel Filter, for Kawasaki
4	83-013	492932	Oil Filter, for Briggs & Stratton
	83-280	696854	Oil Filter, for Briggs & Stratton (Yellow Extended Life Version of Oregon 83-013)
	83-283	52-050-02S	Oil Filter, for Kohler
	83-284	12-050-01S	Oil Filter, for Kohler (Short Version of Oregon 83-283)
	83-282	49065-2078	Oil Filter, for Kawasaki
5	07-700	808656	Fuel Pump, for Briggs & Stratton (without Bracket)
		697090	Fuel Pump, for Briggs & Stratton (with Bracket)
	07-700	24-393-16	Fuel Pump, for Kohler
	07-700	49040-7001	Fuel Pump, for Kawasaki

Cub Cadet LT1000, SLT1500, GT1500, ZTR, & Z-Force

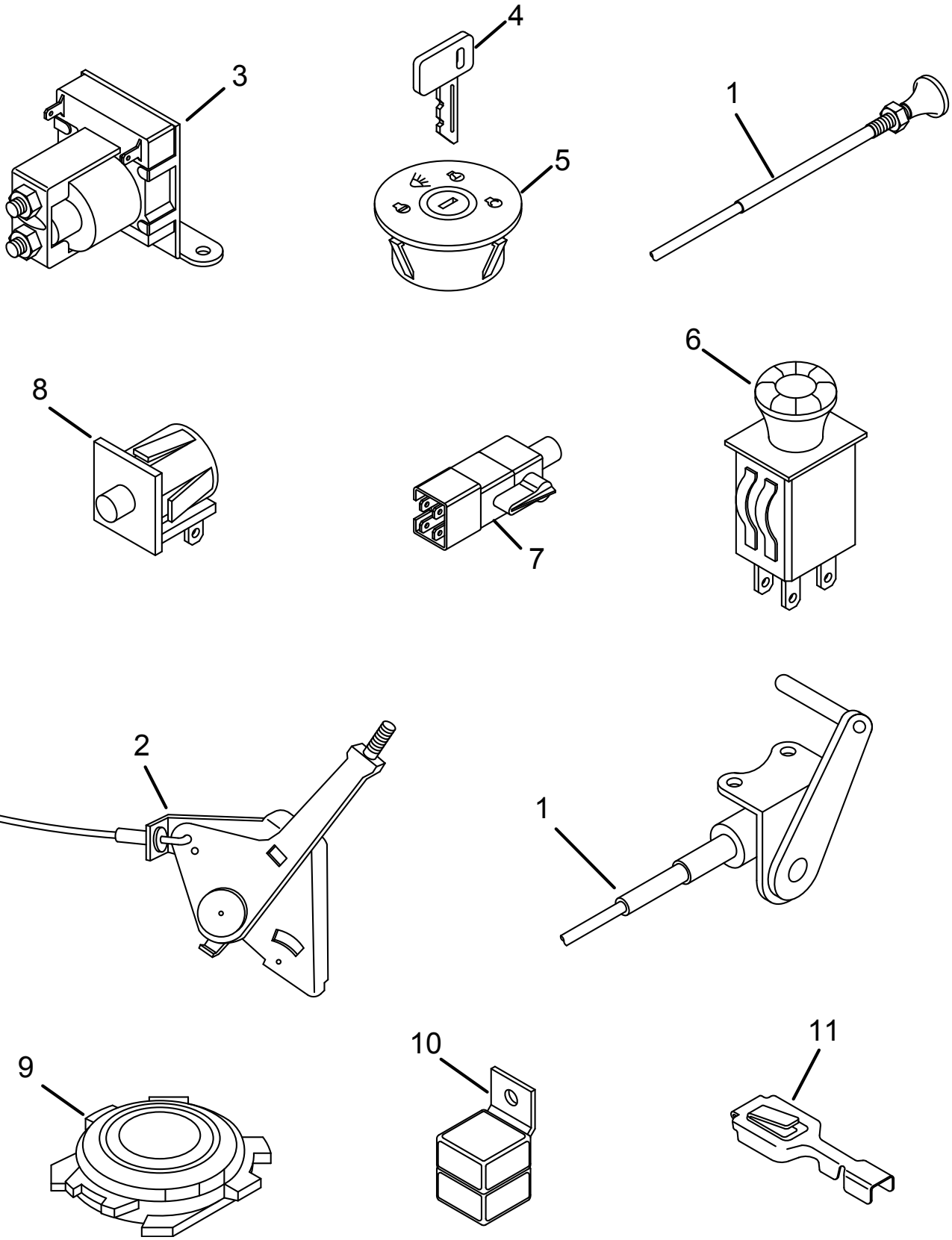

Cub Cadet LT1000, SLT1500, GT1500, ZTR, & Z-Force

№		OEM №	Description
	60-056	02000478	Choke Cable, for Z-Force with Kohler Engine (Except Z-Force 60)
	60-057	01004020	Choke Cable, for Z-Force with Briggs Engine
1	60-059	746-04120	Choke Cable, fits LT1000 Series, SLT1500 Series, & GT1500 (Except with Courage Engine)
	60-039	746-1085A	Choke Cable, fits LT1000 Series with Courage Twin Cylinder Engine
	60-062	746-04143	Choke Cable, fits RZT 22
2	60-042	746-1100	Throttle Cable, fits LT1000 Series with Courage Twin Cylinder Engine, SLT, & GT1500
3	33-335	725-1426	SoleNoid (Except for Z-Force)
		01002228	SoleNoid, for Z-Force (Not Mounted on Starter)
	33-099	725-2054	Ignition Key, Plastic Delta Switches
4	33-099	925-1745	Ignition Key, Plastic Delta Switches
	42-008		Ignition Key, Metal Indak-Type Switches
	33-376	725-1741	Ignition Switch
	33-106	725-04228	Ignition Switch
5	33-399	01003581	Ignition Switch
	33-106	725-04019	Ignition Switch
	33-105	725-04227	Ignition Switch, Only (Module Not Included)
	33-083	725-04258	Electric PTO Control Switch
		010112111	Electric PTO Control Switch
6		725-4174	Electric PTO Control Switch
	33-002	725-1716	Electric PTO Control Switch
	33-083	725-04175	Electric PTO Control Switch
7	33-028	725-04039	Brake Safety Switch
	33-026	02000024	Neutral Switch
8	33-019	725-3166	Reverse Switch
	33-019	01001717	Reverse Switch
9	33-090	01003277	Seat Switch
	33-019	725-3166	Seat Switch
10		01002251	Relay, 12V, 40 Amp
		725-04164	Relay, 12V, 40 Amp
11	33-351		Electrical Terminal for Connectors

John Deere — 42" Decks, Fits Tractor Series Models 100, D100, LA100, & X100 with 7 pt. Star Center Hole Blades

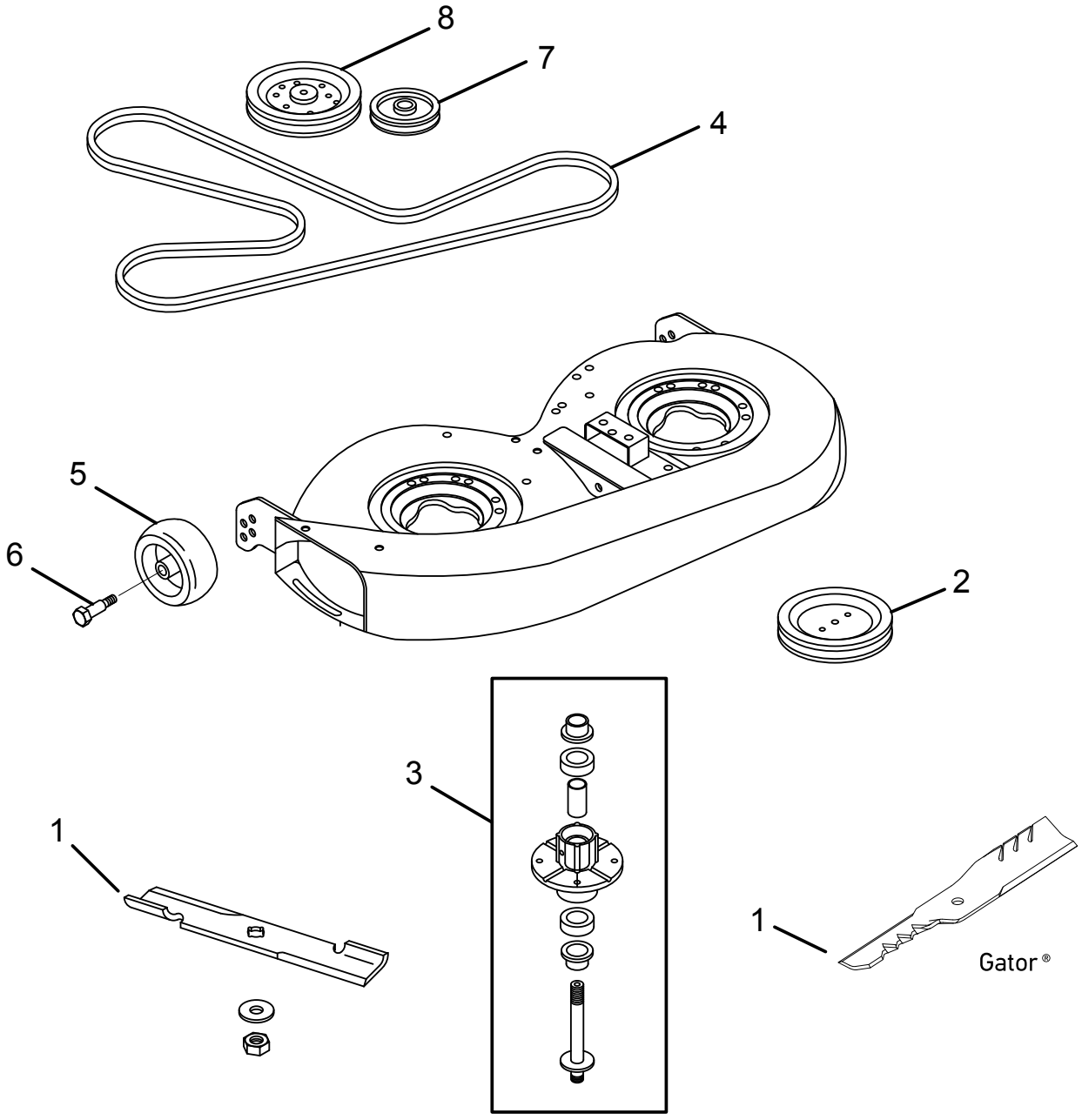

John Deere — 42" Decks, Fits Tractor Series Models 100, D100, LA100, & X100 with 7 pt. Star Center Hole Blades

№	Part No.	OEM No.	Description
Blades for 42" Decks with 7 pt. Star Center Hole			
	192-106	GX22151	100-Series, 21-3/8" Blade
1	92-615		Gator® G3™, 21-3/8" Blade
	592-615		Gator G5™, 21-3/8" Blade
Replacement Parts			
2		GX20367	Spindle Pulley
3	82-359	GY20962/GY20454	Spindle Assembly
4	75-919	GY20570/GX20072	Deck Drive Belt, 1/2" x 103-15/16"
5	72-119	GX10168	Gauge Wheel
6	04-163	GX21012	Gauge Wheel Bolt
7	78-118-0	GY20067	Deck Idler
8	34-109	GY20629	Deck Idler

John Deere — 38" & 42" Standard Decks, Series Models X300 & Z200

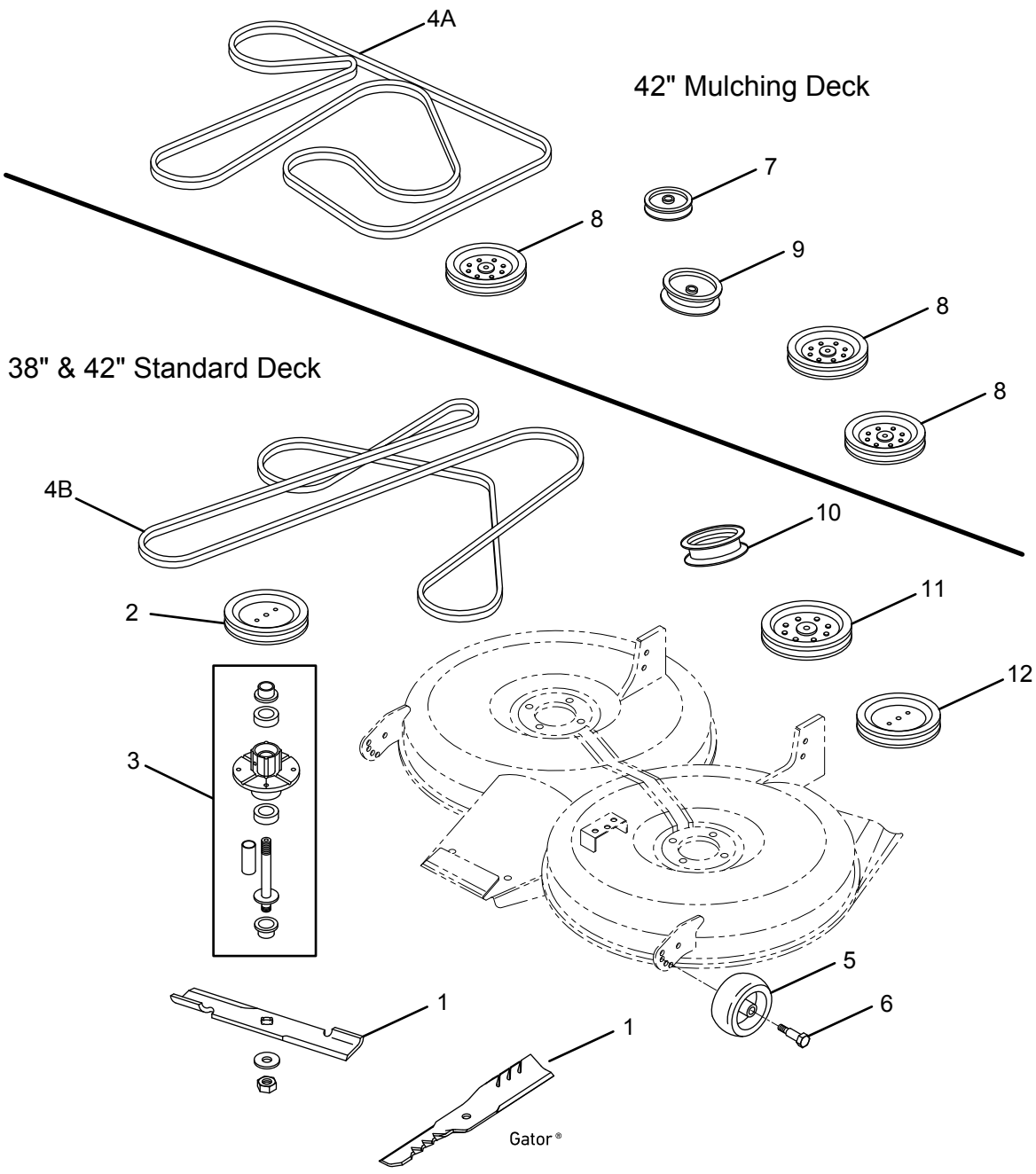

John Deere — 38" & 42" Standard Decks, Series Models X300 & Z200

№	Part No.	OEM No.	Description
Blades for 38" Decks with 7 pt. Star Center Hole Blades			
1	92-109	AM141039, M153118	High-Lift, 19-7/16"
	396-352		Gator® G6®, 19-7/16"
Blades for 38" Decks with 11/16" Round Center Hole Blades			
1	191-392	M82408	100-Series, Standard-Lift, 19-1/2"
	91-398	M83459	Super High-Lift, 19-1/2"
	91-400	M84472	Medium-Lift, 19-1/2"
	91-403	M112991	Mulching, 19-1/2"
	96-309		Gator G3™, 19-1/2"
	596-309		Gator G5™, 19-1/2"
	396-709		Gator G6, 19-1/2"
Blades for 42" Decks with 7 pt. Star Center Hole Blades			
1	92-110	M154061	Standard-Lift, 21-3/8"
		M154062	High-Lift, 21-3/8"
	96-615		Gator G3, 21-3/8"
	596-615		Gator G5, 21-3/8"
Blades for 42" Decks with 13/16" Round Center Hole Blades			
	91-604		Gator G3, 21-1/4"
Replacement Parts			
2		M151720	Spindle Pulley, for 38" & 42" Standard Decks
3		AM134292	Spindle Assembly, for 38" & 42" Decks
4A	75-801	M153160	Deck Drive Belt, for 42" Mulching Decks
4B	75-803	M154621	Deck Drive Belt, for 42" with & without Tension Handle, 1/2" x 143-3/16"
	75-802	M154601	Deck Drive Belt, for 38" Decks with Tension Handle, 1/2" x 143-5/8"
	75-804	M155525	Deck Drive Belt, for 38" Decks without Tension Handle, 1/2" x 142-5/16"
5	72-094	M111489	Gauge Wheel
6	04-163	GX21012	Gauge Wheel Bolt
7	78-131	AM118447	V-Idler
8		AM135957	V-Idler, Before Serial Number 040000
	34-106	AM136357	V-Idler, After Serial Number 040001
9		TCA14595	V-Idler, Before Serial Number 040000
	34-107	AM136397	V-Idler, After Serial Number 040001
10	34-104	AM135773	Flat Idler, 38" & 42" with & without Tension Handle
11	34-106	AM136357	V-Idler, 38" & 42" Decks without Tension Handle
		AM135957	V-Idler, 38" & 42" Decks with Tension Handle
12	34-103	AM135526	Flat Idler, 38" & 42" with & without Tension Handle

John Deere — 48" & 50" DECKS

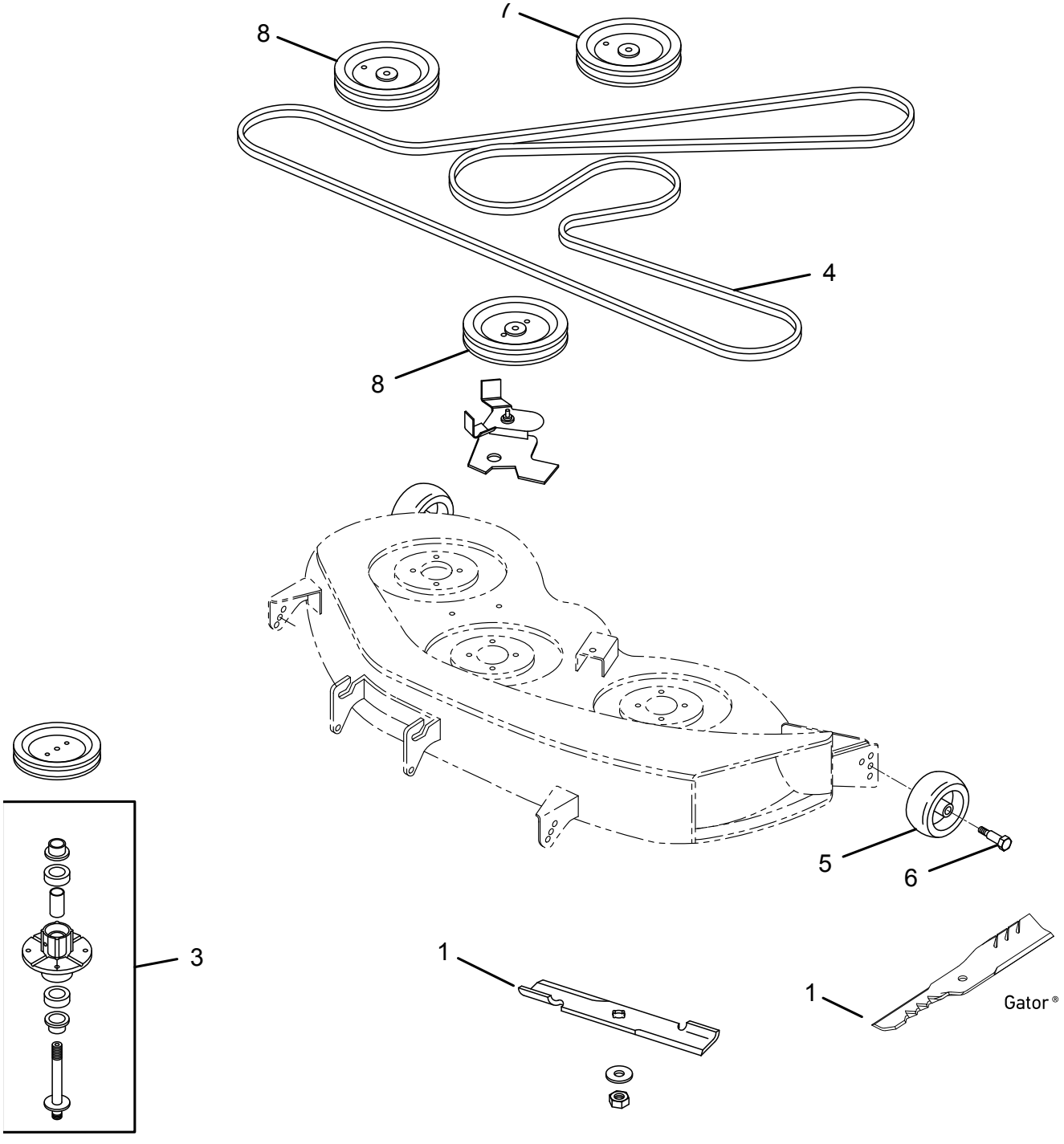

John Deere — 48" & 50" Decks

№	Part No.	OEM No.	Description
Blades for 48" Decks with 13/16" Round Center Hole			
1	90-348	M145476, M127500	Mulching, 16-15/16"
	96-354		Gator® G3™, 16-15/16"
	596-354		Gator G5™, 16-15/16"
	396-354		Gator G6®, 16-15/16"
Blades for 48" Decks with 11/16" Round Center Hole			
1	191-108	GX20250, GY20568	100-Series, Standard-Lift 17"
	91-496	GX20434	High-Lift, 17"
	92-675		Gator G3, 17"
Blades for 48" Decks with 7 pt. Star Center Hole			
1	92-104	GX21784, GY20852	Standard-Lift, 17"
	91-586	GX21785	High-Lift, 17"
	92-105	GX21786	Mulching, 17"
	92-616		Gator G3, 17"
	592-616		Gator G5, 17"
Blades for 48", 7-Iron Decks with 7/8" Round Center Hole			
1	91-079	M136185	Mulching, 17-1/16"
	396-770		Gator G6, 17-1/16"
Blades for 50" Decks with 11/16" Round Center Hole			
1	91-393	AM39966, M86209	Standard-Lift, 17-3/16"
	396-738		Gator G5, 17-3/16"
Replacement Parts			
3		TCA13807, AM124339	Spindle Assembly, for 48", 7-Iron Decks
		AM135349, AM124498, AM131680	Spindle Assembly, for 48" Decks, fits GX, LX, X, & Z-Track Series
4	75-800	GX21833	Deck Drive Belt, 48", 100-Series, 1/2" x 141-3/8"
	175-992	GX22036, GY20571	Deck Drive Belt, 48", fits L100-Series, 1/2" x 139-11/16"
	175-295	M154958, M110313	Deck Drive Belt, 48", fits LX100, LX200, & GX300 Series, 5/8" x 111-5/16"
5	72-119	GX10168	Gauge Wheel, 100-Series, 5" x 2"
	72-165	AM133602	Gauge Wheel Kit (with Hardware), 5" x 2-1/2"
	72-129	M115245	Deck Roller, 3-3/4" x 3-3/8"
	72-131	M113955	Deck Roller, 3" x 2-1/2"
6	04-163	GX21012	Gauge Wheel Bolt
7	78-118-0	GY20067	Deck Idler, 100-Series
8	34-109	GY20629	Deck Idler, 100-Series

John Deere — 54" Decks, 100-Series

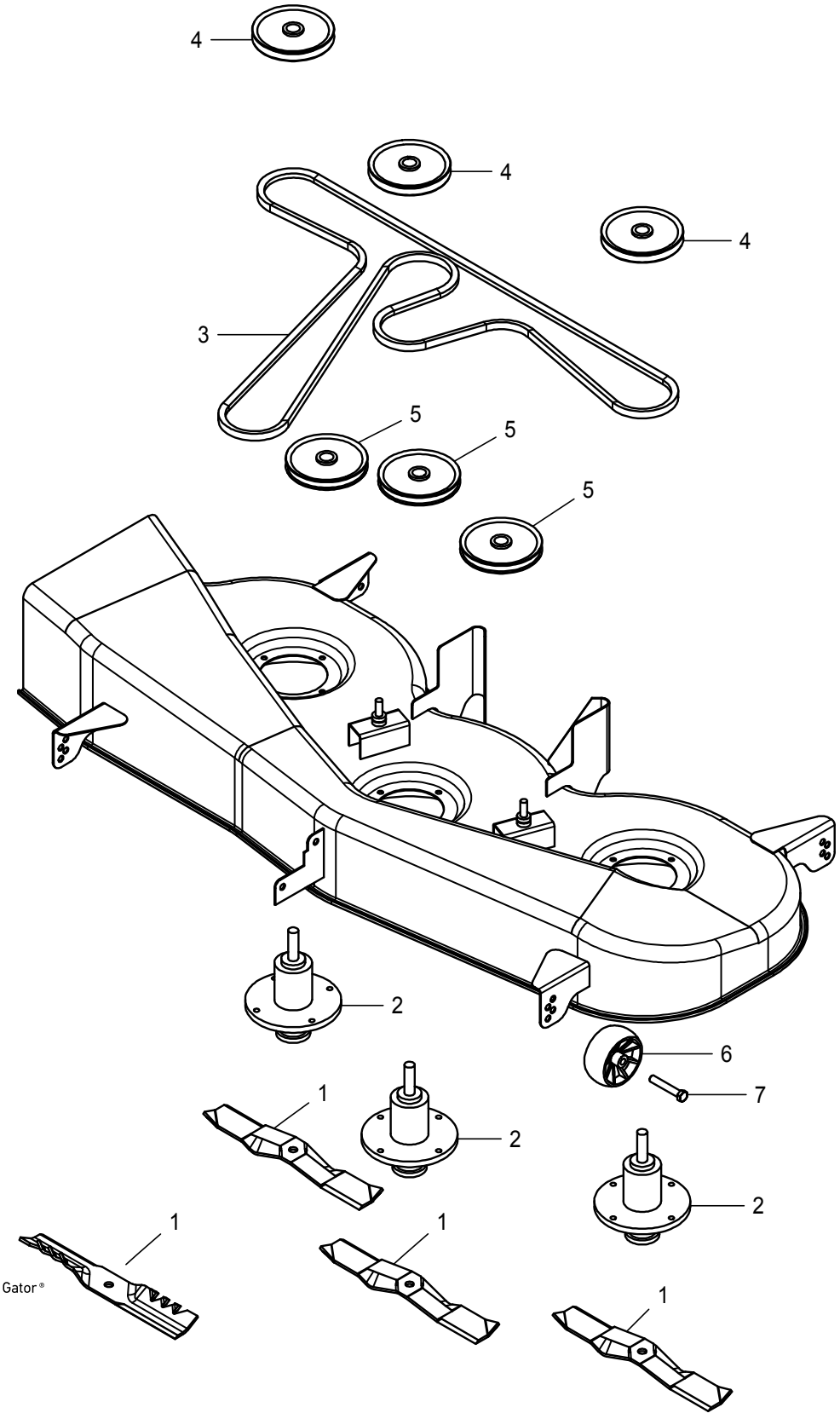

John Deere — 54" Decks, 100-Series

№	Part No.	OEM No.	Description
Blades for Decks with 7 pt. Star Center Hole			
	92-103	GX21380/GY20684/GY20679	Standard-Lift 18-5/8"
1	92-617		Gator® G3™ 18-5/8"
	592-617		Gator G5™ 18-5/8"
Replacement Parts			
2	82-360	GY20867	Spindle Assembly, for Decks, 100-Series
3	75-799	GX21395	Deck Drive Belt, 100-Series, 5/8" x 161-9/16"
4		GX21381	Spindle Pulley, 100-Series
6	34-109	GY20629	Flat Idler, 100-Series, 5-3/16" OD 1-5/8" Wide .669" ID
6	72-119	GX10168	Gauge Wheel, 100-Series, 5" x 2"
7	04-163	GX21012	Gauge Wheel Bolt

John Deere — 54" Decks LX & GT Series

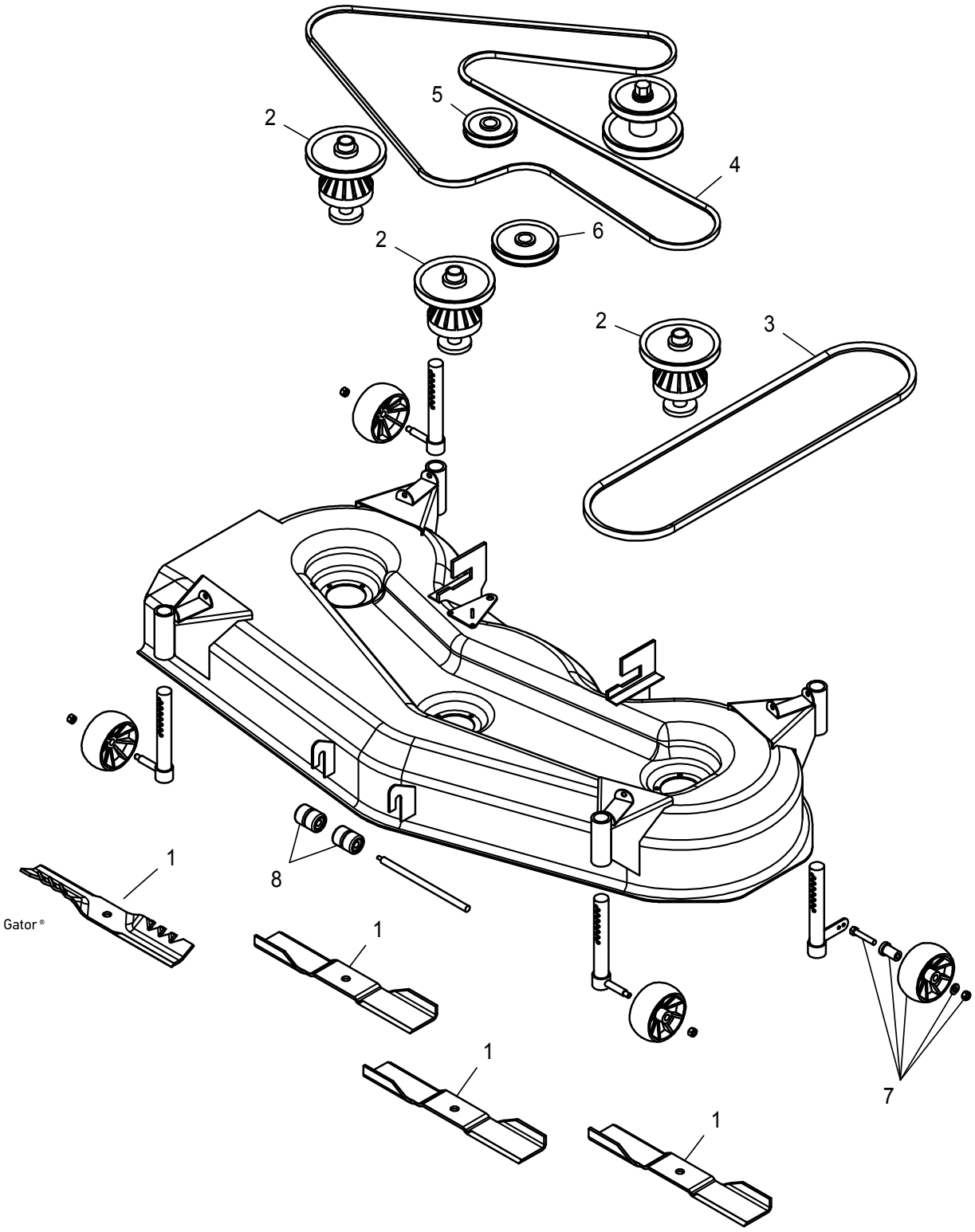

John Deere — 54" Decks LX & GT Series

№	Part No.	OEM No.	Description
Blades for Decks with 13/16" Round Center Hole			
1	91-380	M115496, M114582, M115329	Standard-Lift, 18-5/8"
	91-404	M135590, M76767	Performance Lift, 18-5/8"
	91-384	M113518	Tricycler, 18-5/8"
	96-306		Gator® G3™, 18-5/8"
	596-306		Gator G5™, 18-5/8"
	396-706		Gator G6®, 18-5/8"
Blades for Decks with 13/16" Round Center Hole			
1	90-354	M143520	Standard-Lift, 19"
	596-719		Gator G5, 19"
	396-719		Gator G6, 19"
Blades for 7-Iron Decks with 7/8" Round Center Hole			
1	91-138	M136195/TCU30316	Standard-Lift, 19-1/16"
	92-118	M144652/TCU30317	High-Lift , 19-1/16"
	96-364		Gator G3, 19-1/16"
	596-769		Gator G5, 19-1/16"
	396-769		Gator G6, 19-1/16"
Replacement Parts			
2	82-333	AM121342, AM115528, AM121229	Spindle Assembly for Decks LX & GT Series
3	175-300	M143019	Deck Primary Drive Belt, LX & GT Series, 5/8" x 65-1/8"
4	75-984	M118685	Deck Secondary Drive Belt, LX & GT Series, 5/8" x 120-1/8"
5	78-112	AM37249	Flat Idler, LX & GT Series, OD: 4-3/8", Width: 1", ID: .669"
6	78-025	AM106627	Flat Idler, LX & GT Series, OD: 5-1/2", Width: 1-3/8", ID: .669"
7	72-165	AM133602	Gauge Wheel Kit (with Hardware), 5" x 2-1/2"
8	72-131	M113955	Deck Roller, 3" x 2-1/2"

John Deere — 60" Deck ZTrak B, M, & R Series

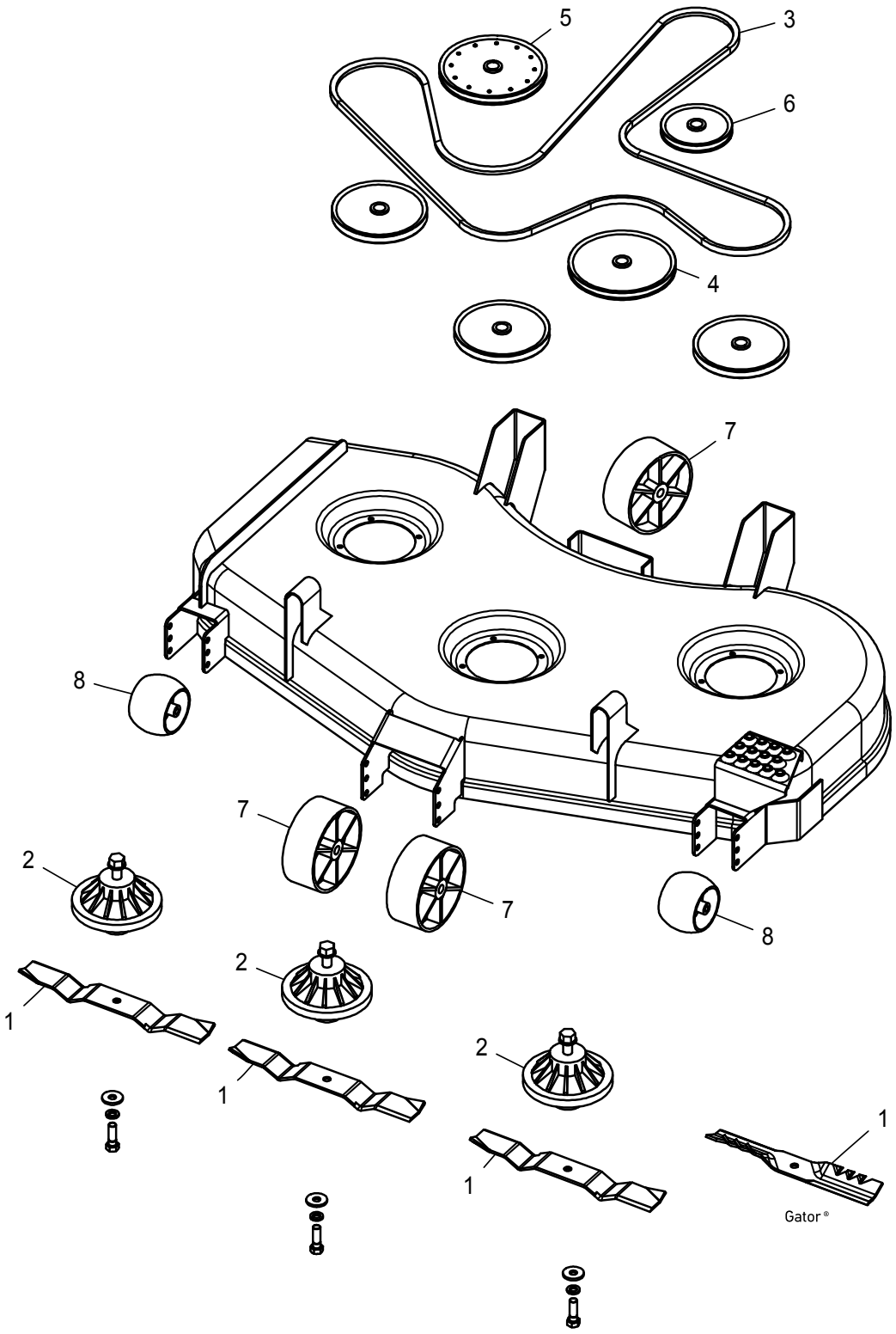

John Deere — 60" Deck ZTrak B, M, & R Series

№	Part No.	OEM No.	Description
Blades for 60" Decks with 7/8" Round Center Hole			
	91-078	M128485	Standard-Lift, 21-1/16"
	92-113	TCU15881	High-Lift, 21-1/16"
1		M133381	Low-Lift, 21-1/16"
	596-730		Gator® G5™, 21-1/16"
	396-730		Gator G6®, 21-1/16"
Replacement Parts			
2		TCA20639, TCA17517	Spindle Assembly,
3		TCU35604, TCU30356	Deck Belt, B, M, & R Series
4		TCA17135	Idler Pulley, B, M, & R Series
5		TCA22651	Idler Pulley, B, M, & R Series
6		TCA20602	Idler Pulley, B, M, & R Series
7		TCU34060	Deck Roller, B, M, & R Series
8	72-032	TCU18744	Deck Wheel, B, M, & R Series

John Deere — 60" Decks, 4010, 4110, & 4115 C.U.T. Models

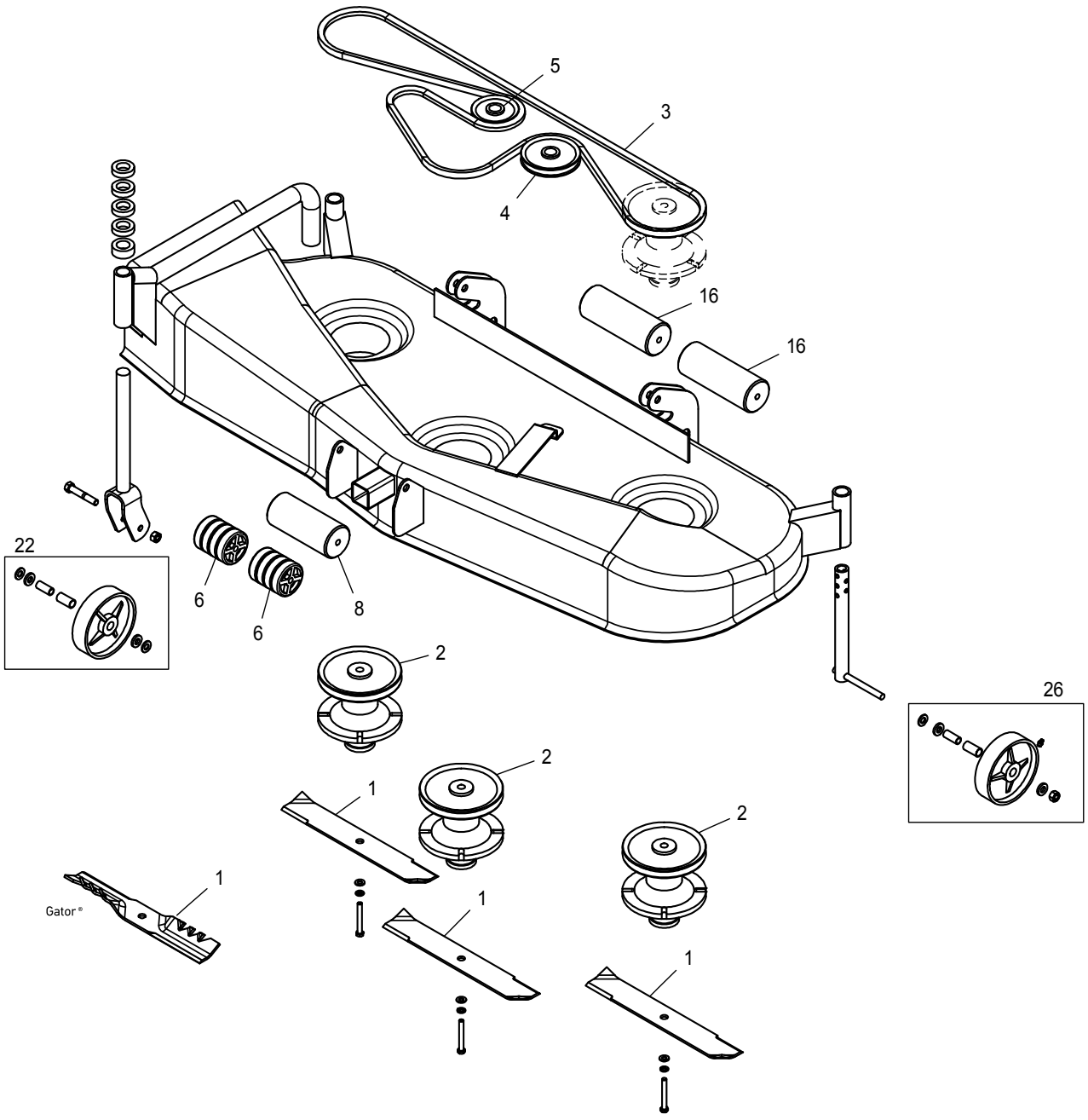

John Deere — 60" Decks, 4010, 4110, & 4115 C.U.T. Models

№	Part No.	OEM No.	Description
Blades for 60" Decks with 7/8" Round Center Hole			
	91-394	M141785	Standard-Lift, 20-1/2"
1	596-734		Gator® G5™, 20-1/2"
	396-734		Gator G6®, 20-1/2"
Replacement Parts			
2		AM123184	Spindle Assembly
3		M117636	Deck Belt
4	78-025	AM106627	Idler, 22 Cut, 4010
5	78-112	AM37249	Idler, 6 Cut, 4010
6	72-129	M115245	Deck Roller 4
7		AM101044	Deck Roller 16
8		AM101042	Deck Roller 26
9	72-098	AM107560	Deck Wheel 22
10	72-099	AM107561	Deck Wheel 26

John Deere — 60" Decks 4210, 4310, & 4410 C.U.T. Models

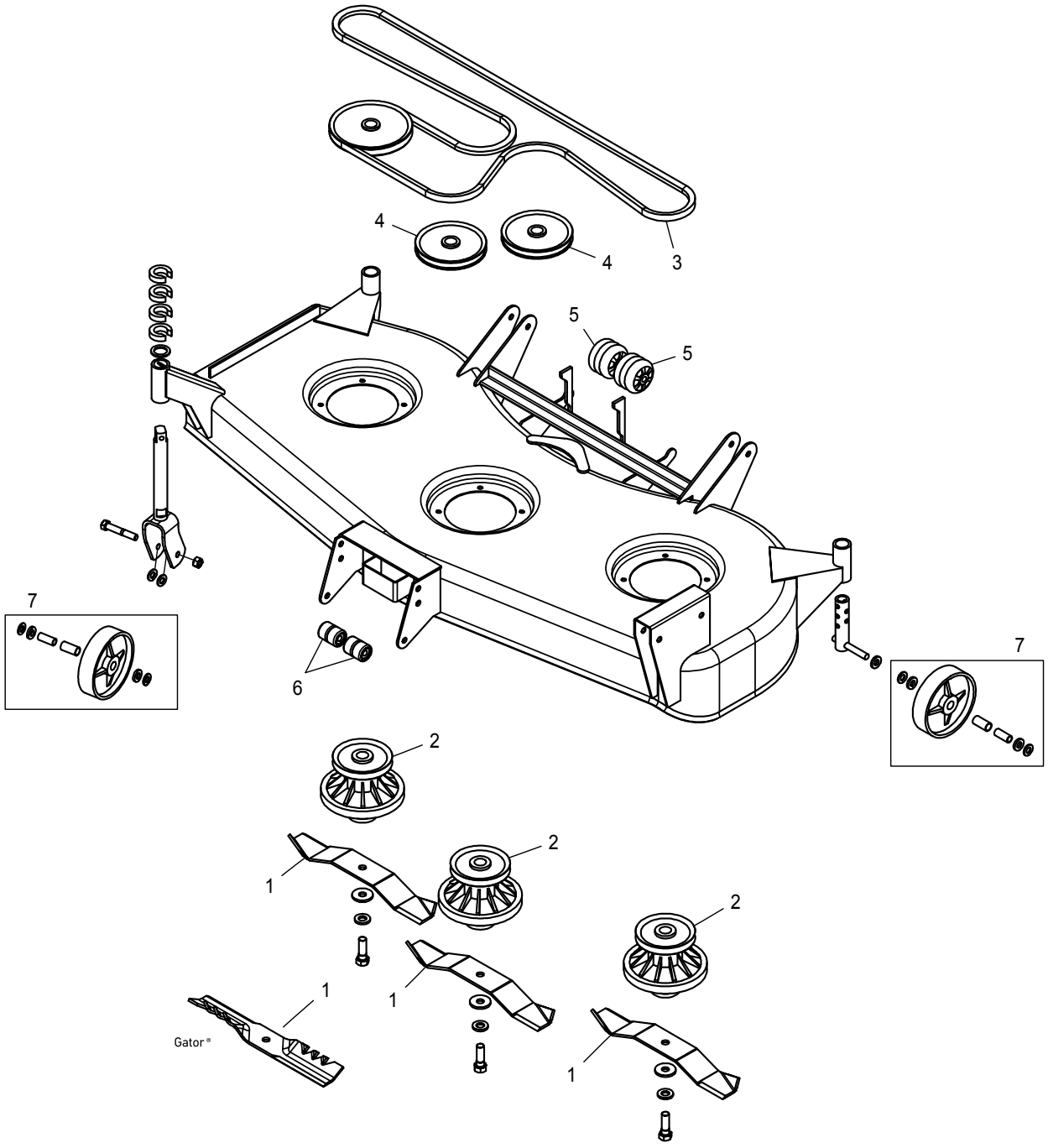

John Deere — 60" Decks 4210, 4310, & 4410 C.U.T. Models

№	Part No.	OEM No.	Description
Blades for 60" Decks with 7/8" Round Center Hole			
	91-078	M128485	Standard Blade, 21-1/16"
	92-113	TCU15881	High-Lift, 21-1/16"
1		M133381	Low-Lift, 21-1/16"
	596-730		Gator® G5™, 21-1/16"
	396-730		Gator G6®, 21-1/16"
Replacement Parts			
2		TCA13807	Spindle, 4210, 4310, & 4410 C.U.T.
3		M136137	Belt, 6, 4210 C.U.T.
4		AM124925	Idler, 7, 4210 C.U.T.
5	72-129	M115245	Roller, 9, 4210, 4310, & 4410 C.U.T.
6	72-131	M113955	Roller, 14, 4210, 4310, & 4410 C.U.T.
7		AM107558	Deck Wheel

John Deere — 62C Decks on C.U.T. & X400 Series

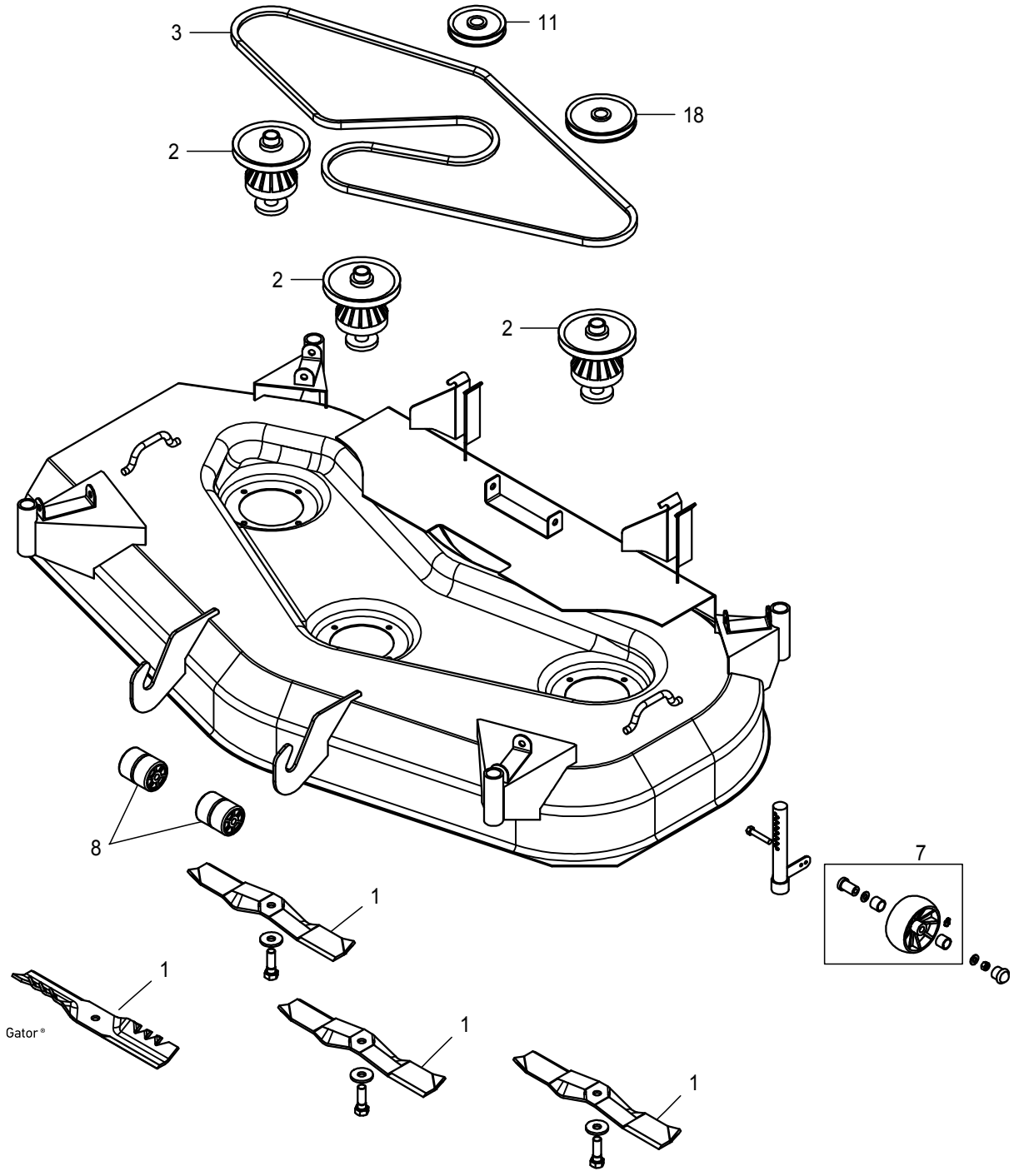

John Deere — 62C Decks on C.U.T. & X400 Series

№	Part No.	OEM №	Description
Blades for 62" Decks with 3/4" Round Center Hole			
	90-309	M143504	High-Lift, 21-5/8"
1	596-771		Gator® G5™, 21-5/8"
	396-771		Gator G6®, 21-5/8"
Replacement Parts			
2		AM135349	Spindle Assembly, for 62"Decks (No Shaft/Pulley)
3		M142997	Deck Drive Belt, 62" (Secondary) 62C Deck
4		M140059	Spindle Pulley, 62"
5	78-025	AM106627	Idler, 18
7	72-165	AM125172	Deck Wheel Kit
8	72-131	M113955	Deck Roller

John Deere — 100 & X300 Series

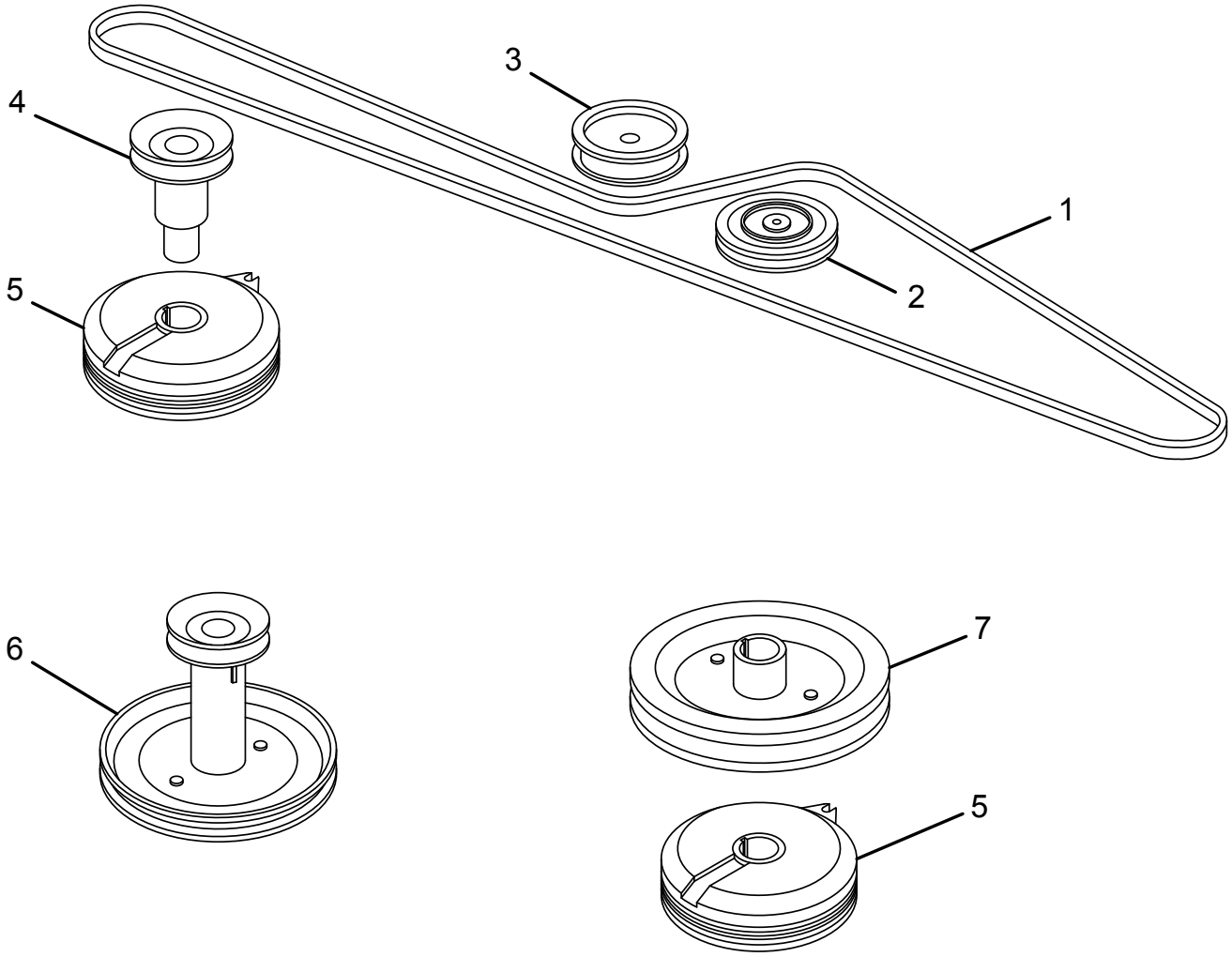

John Deere — 100 & X300 Series

№	Part No.	OEM No.	Description
1	75-806	GX22036	Drive Belt, fits Traction Model 100, 1/2" x 92-5/16"
	75-979	GX20006	Drive Belt, fits Traction Models 110, 120, 130, 140, & 150, 1/2" x 88-5/8"
	75-807	M152284	Drive Belt, fits Traction Model X300, 1/2" x 93-9/16"
2	34-102	GX20286	V-Idler, fits 100-Series
3	78-129	GX20287	Flat Idler, fits 100-Series
	34-100	AM134501	Flat Idler, fits X300 Series
4		GY20129	Engine Pulley, fits 100-Series with Electric PTO
5		GY20878	Electric PTO Clutch, fits 100-Series
		AM134397	Electric PTO Clutch, fits X300 Series
6		GY20140	Engine Pulley, fits 100-Series with Manual PTO
7		AM134008	Engine Pulley, fits X300 Series

John Deere 100 & X300 Series

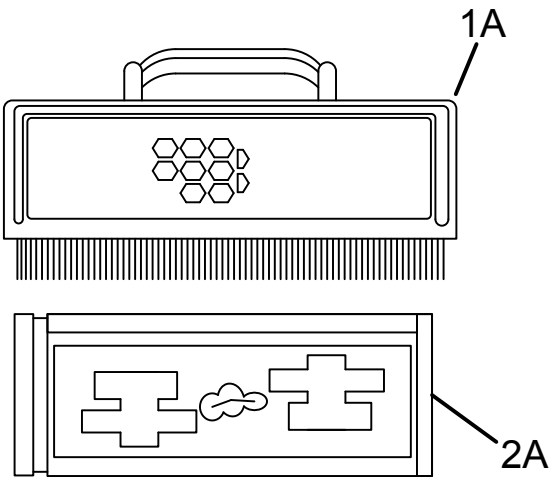

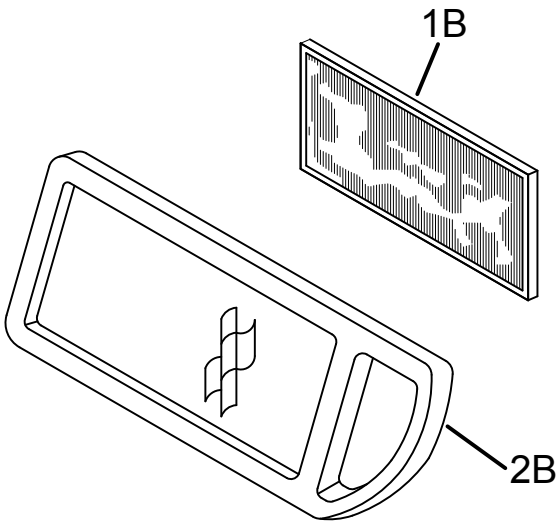

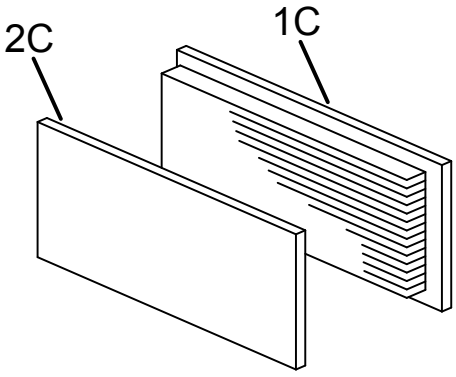

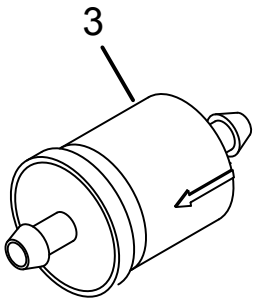

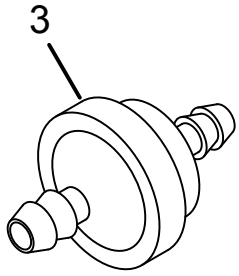

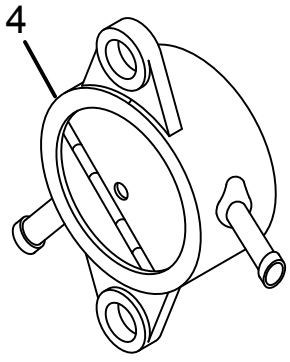

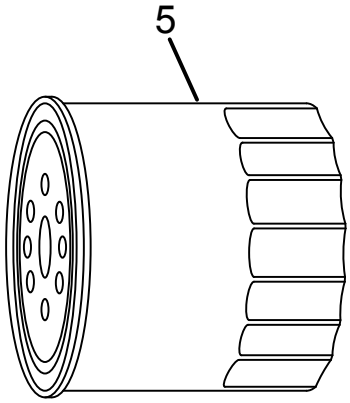

John Deere 100 & X300 Series

№	Part No.	OEM No.	Description
1A	30-032	MUI11286	Air Filter, fits 100-Series
1B	30-074	M149171	Air Filter, fits 100-Series
1C	30-057	MUI10998	Air Filter, fits X300 Series
2A	30-914	LG273638S	Pre Filter, fits 100-Series
2B	30-076	M147489	Pre Filter, fits 100-Series
2C	30-921	MUI10999	Pre Filter, fits X300 Series
3	07-103	AM116304	Fuel Filter
4	07-700	M147560	Fuel Pump, fits 100, 110, & 120 Series Tractors
	07-700	LG808656	Fuel Pump, fits 130, 140, & 150 Series Tractors
	07-700	M153011	Fuel Pump, fits X300 Series Tractors
5	83-013	LG492932S	Oil Filter, fits 100-Series, OD: 3", Height: 2-1/4", Seal OD: 2-13/16"
	83-284	AM125424	Oil Filter, fits 100-Series, OD: 3", Height: 2-5/8", Seal OD: 2-13/16"
	83-283	GY20577	Oil Filter, fits 100-Series, OD: 3", Height: 3-1/8", Seal OD: 2-13/16"
	83-282	AM107423	Oil Filter, fits X300 Series, OD: 2-3/4", Height: 2-7/8", Seal OD 2-3/4"

John Deere 100 & X300 Series Controls

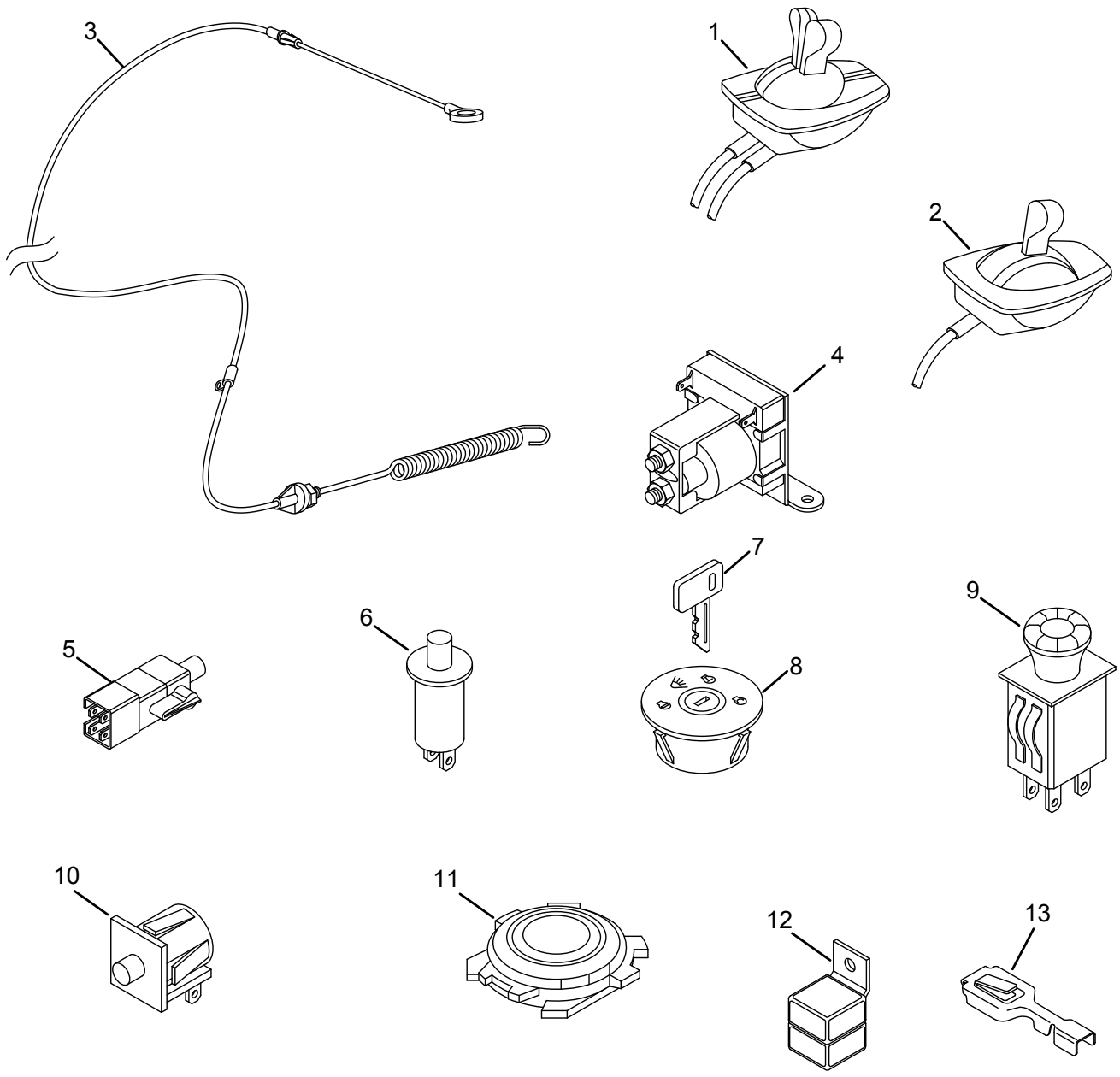

John Deere 100 & X300 Series Controls

№	Part No.	OEM No.	Description
1		GY20948	Throttle/Choke Control, fits 100-Series Tractors
		AM134542	Throttle/Choke Control, fits X300 Series Tractors
2		GY20947	Throttle Control, fits 100-Series Tractors
3	60-079	GY20156	PTO Engagement Cable, fits 100-Series Tractors
4	33-431	AM133094	Solenoid, fits 100-Series Tractors
		MIU10981	Solenoid, fits X300 Series Tractors
5	33-085	GY20094	Brake Safety Switch, fits 100-Series Tractors
		AMT469	Brake Safety Switch, fits X300 Series Tractors
6		AM124734	RIO Switch, fits 100-Series Tractors
		LVA13307	Reverse Switch, fits X300 Series Tractors
7	33-099	AM123426	Ignition Key, fits 100-Series Tractors
	33-099	AM135345	Ignition Key, fits X300 Series Tractors
8	33-376	GY20074	Ignition Switch, fits 100-Series Tractors
	33-074	AM133596	Ignition Switch, fits X300 Series Tractors Before Serial #040001
	33-376	AM133597	Ignition Switch, fits X300 Series Tractors After Serial #040001
9		GY20939	Electric PTO Control Switch, fits 100-Series Tractors
		AM135131	Electric PTO Control Switch, fits X300 Series Tractors
10		GY20073	Seat Switch, fits 100-Series Tractors
		AM130454	Seat Switch, fits X300 Series Tractors Before Serial #040001
11		AM130453	Seat Switch, fits 100-Series Tractors
		AM130453	Seat Switch, fits X300 Series Tractors After Serial #040001
12		AM106305	Relay, fits 100 & X300 Series Tractors
13	33-351	U46662	Electrical Terminal for Connectors

MTD 38" & 42" Decks (2 Blades)

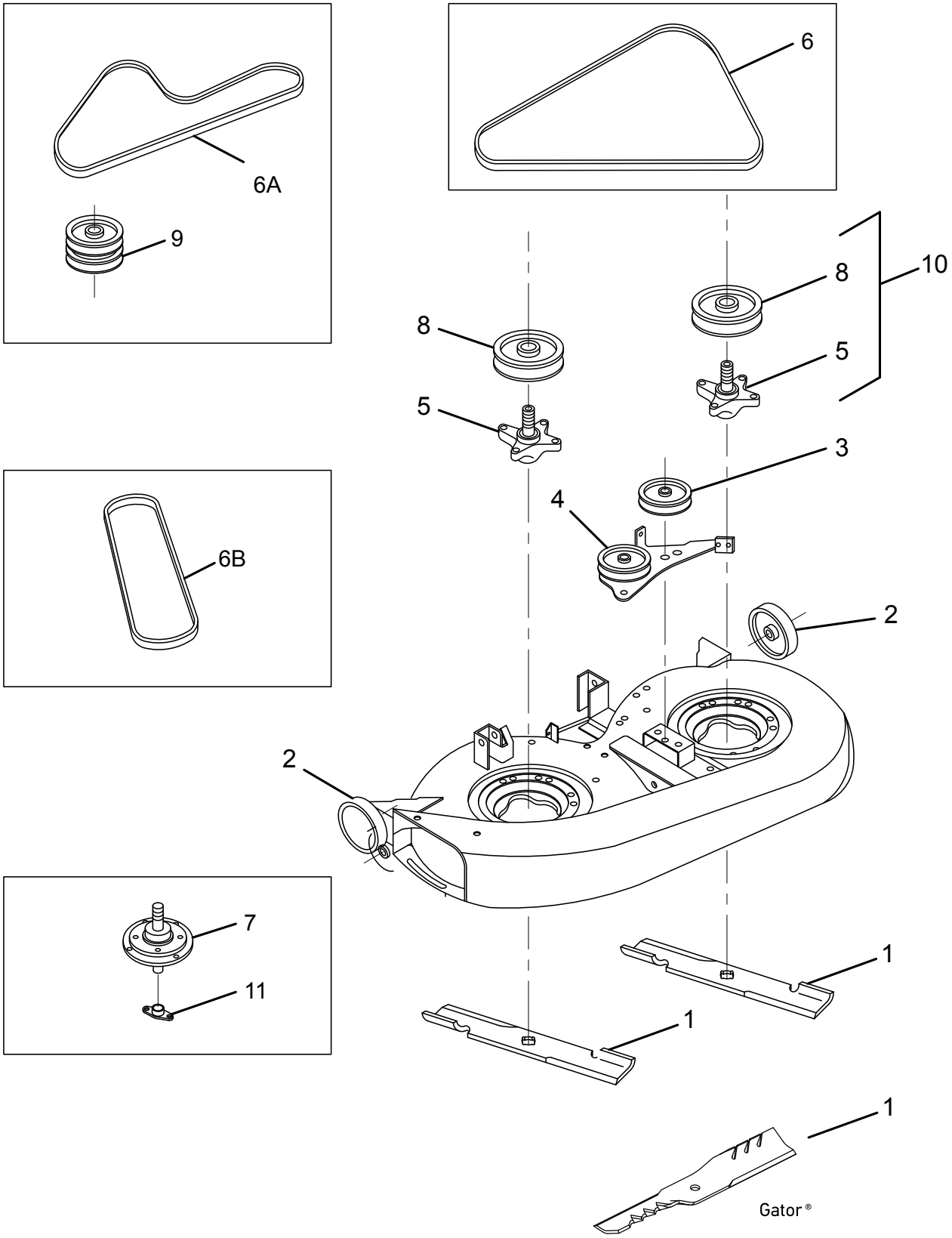

MTD 38" & 42" Decks (2 Blades)

№	Part No.	OEM No.	Description
Blades for 38" Decks with 5/8" 6 pt. Star Center Hole			
1	198-058	742-0610	100-Series, Mulching, 19-5/16"
	198-052	742-610	100-Series, Standard-Lift, 19-5/16"
	98-628		Gator® G3™, 19-5/16"
	598-628		Gator G5™, 19-5/16"
Blades for 42" Decks with 3/8" Round Center Hole 5/16" Outer Holes			
1		742-0503	Sand Lift, 21-3/16"
	98-499	742-0499A	High-Lift, 21-3/16"
	98-600		Gator G3, 21-3/16"
	598-600		Gator G5, 21-3/16"
Blades for 42" Decks with 5/8" 6 pt. Star Center Hole			
1	198-059	742-0616A	100-Series, Mulching, 21-3/16"
	98-093	742-0616A	High-Lift, 21-3/16"
	198-153		100-Series, High-Lift, 21-3/16"
	98-629		Gator G3, 21-3/16"
	598-629		Gator G5, 21-3/16"
Replacement Parts			
2	72-318	734-0973	Gauge Wheel, 4-3/4" x 1-3/8"
3	78-019	756-0116	V-Idler Pulley, OD: 3", W: 13/16", ID: 3/8"
	78-029	756-1208	V-Idler Pulley, OD: 4", W: 11/16", ID: 3/8"
4	78-098	756-0229	Flat Idler Pulley, OD: 4-7/8", FOD: 4", W: 1-1/8", FW: 3/4", ID: 3/8"
	78-050	756-0365	Flat Idler Pulley, OD: 4-1/8", FOD: 3-1/2", W: 1-1/16", FW: 3/4", ID: 3/8"
	34-041	756-0627	Flat Idler Pulley, OD: 4-1/8", FOD: 3-1/2", W: 1-1/4", FW: 7/8", ID: 3/8"
	78-046	756-1229	Flat Idler Pulley, OD: 4-7/8", FOD: 4", W: 1", FW: 3/4", ID: 3/8"
	78-047	756-3105	Flat Idler Pulley, OD: 5-3/4", FOD: 5", W: 1-1/2", FW: 1", ID: 3/8"
	78-028	756-0981A	Flat Idler Pulley, OD: 3-1/8", FOD: 2-3/4", W: 1-1/4", FW: 7/8", ID: 3/8"
5	82-513-2	618-0138	Spindle Assembly without Pulley, for 38" Cut, Use with Oregon 44-102 Pulley
	82-513-2	618-0142	Spindle Assembly without Pulley, for 42" Cut, Use with Oregon 44-369 Pulley
	04-015	912-0417A	Spindle Nut (Not Shown)
6	75-145	754-0145	Deck Belt, for 38" Cut (1971 – 1987), 5/8" x 69-5/16"
	75-025	754-0364	Deck Belt, for 38" Cut, fits 400 Series Models (1988–1998), 5/8" x 68-1/4"
	75-028	754-0371A	Deck Belt, for 42" Cut (1989 – 1996), 5/8" x 74-1/4"
	75-029	754-0329A	Deck Belt, for 38" Cut, fits 600 Series Models (1994 – 1997), 21/32" x 69-1/4"
	75-361	754-0472	Deck Belt, for 42" Cut Auto Drive Units with Electric PTO, 5/8" x 83-1/4"
	75-263	754-0485	Deck Belt, for 42" Cut Auto Drive Units with Manual PTO, 5/8" x 97-1/4"
6A	75-677	754-0498	Deck Belt, for 42" Cut, fits 600 Series Models with 2-Belt Deck, 1/2" x 67-1/4"
6B	75-676	754-0497	PTO Belt, for 42" Cut, fits 600 Series Models with 2-Belt Deck, 1/2" x 60-3/8"
7	82-500	917-0906A	Spindle Assembly, for 38" & 42" Cut (1991–1996) with Splined Shaft to Accept Blade Adapter
8	44-102	756-0969	Spindle Pulley, for 38" Cut
8	44-369	756-0980	Spindle Pulley, for 42" Cut
9	44-103	756-1202	Double Pulley with Bearings, for 42" Cut Decks with 2 Belts
10	82-517	918-0574	Spindle Assembly with Pulley, for 42" Cut, fits Late Model 600 Series
11	65-221	748-0300	Blade Adapter

MTD 46", 50", & 54" Decks (3 Blades)

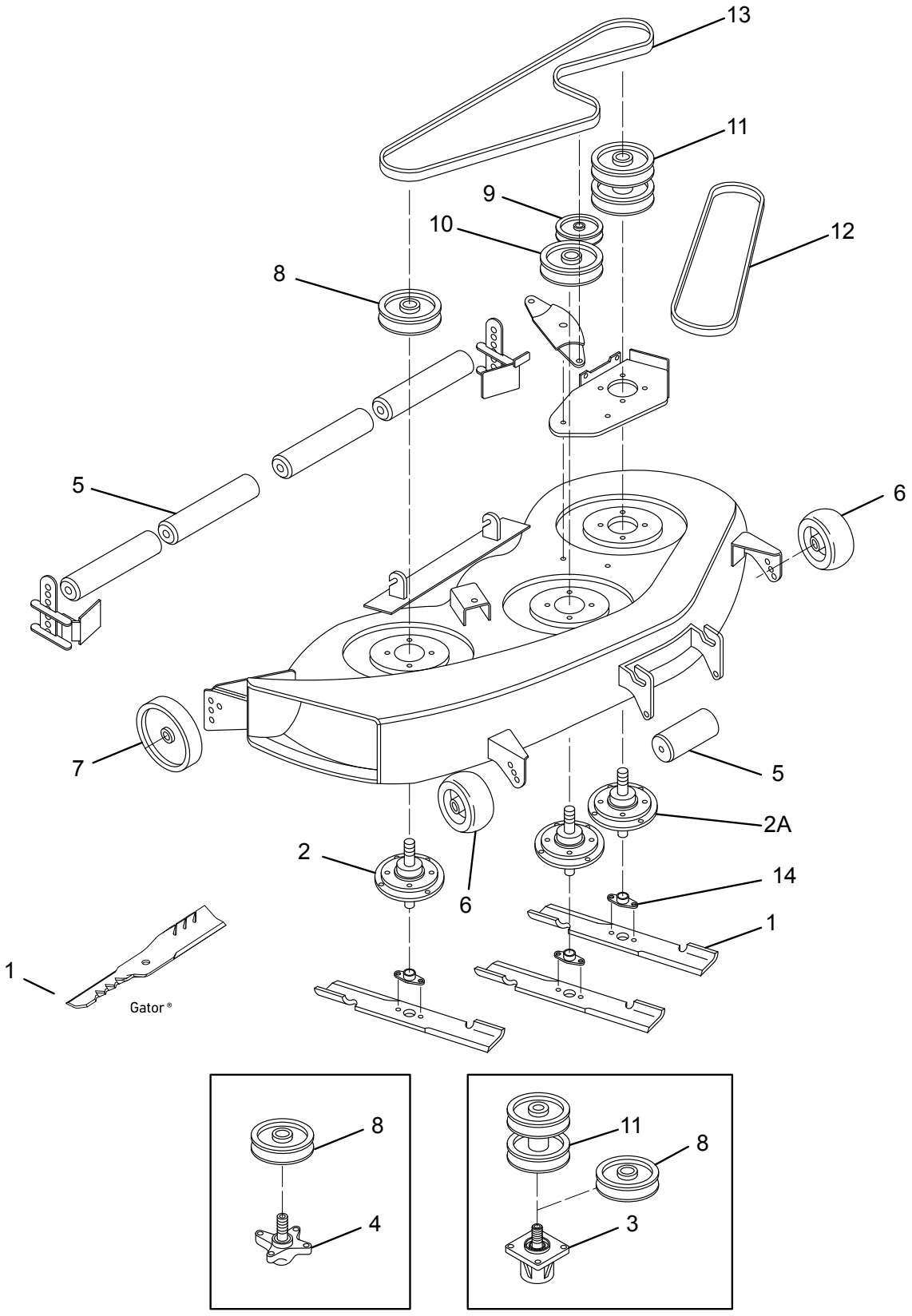

MTD 46", 50", & 54" Decks (3 Blades)

№	Part No.	OEM No.	Description
Blades for 46" Decks with 11/16" 6 pt. Star Center Hole, (1995 & Earlier)			
1	98-056	742-0543	Blade, Center, 14-13/16"
	98-057	742-0542	Blade, OutSide, 16-1/4"
Blades for 46" Decks with 5/8" 6 pt. Star Center Hole (1996 & Later)			
1	98-069	742-0645	Blade, Center, 14-13/16"
	98-670		Gator® G3™ 14-13/16"
	98-054	742-0644	Blade, Outside, 16-1/4"
	98-634		Gator G3 16-1/4"
Blades for 46" Decks with 5/8" 6 pt. Star Center Hole (1999 & Later)			
1	98-061	742-0612	Mulch Blade, Center, 14-7/8"
	198-063	742-0611	100-Series, Mulch Blade, Outside, 16-1/4"
	98-637		Gator G3, 14-7/8"
	98-640		Gator G3, 16-1/4"
Blades for 50" Decks with 5/8" 6 pt. Star Center Hole (1998 & Later)			
1	98-064-1	742-0738	Standard-Lift, 17-5/16"
	98-087	742-04056C	High-Lift, Bagger, 17-5/16"
	598-064		Gator G5™, 17-5/16"
Blades for 54" Decks with 5/8" 6 pt. Star Center Hole (2002 & Later)			
1	98-072	742-0677	High-Lift, 18-1/2"
	98-672		Gator G3, 18-1/2"
	598-672		Gator G5, 18-1/2"
	398-672		Gator G6®, 18-1/2"
Replacement Parts			
2	82-502	717-0912	Spindle Assembly, for 46" Cut (1988 – 1992), Single Pulley
	82-503	717-0913	Spindle Assembly, for 46" Cut (1988 – 1992), Double Pulley
3	82-511	618-0117	Spindle Assembly, for 46" Cut Star Blades (1993 – 1996), Double Pulley
	82-512	618-0116	Spindle Assembly, for 46" Cut Star Blades (1993 – 1996), Single Pulley
	82-515	618-0240	Spindle Assembly, for 46" Cut Star Blades (1997 & Later), Single Pulley
	82-516	618-0241	Spindle Assembly, for 46" Cut Star Blades (1997 & Later), Double Pulley
	82-518	618-0595	Spindle Assembly, for 46" Cut Star Blades, Late Model 800, Tall Double Pulley
	82-043	918-05016	Spindle Assembly, for 50" Cut Star Blades (2012), Single Pulley
4	82-519	918-0671	Spindle Assembly, for 54" Cut Star Blades, Late Model 800, Single Pulley
5	72-319	731-3005	Deck Roller, 6" x 2-1/2"
6	72-308-1	734-3058	Gauge Wheel (Oval Type), 5" x 2-5/8"
7		734-0974	Gauge Wheel, 6" x 1-3/8"
8	44-102	756-0969	Spindle Pulley, OD: 5", ID: 5/8", Splined
9	78-019	756-0116	V-Idler Pulley, OD: 3", W: 13/16", ID: 3/8"
	78-029	756-1208	V-Idler Pulley, OD: 4", W: 11/16", ID: 3/8"
10	78-098	756-098	Flat Idler Pulley, OD: 4-7/8", FOD: 4", W: 1-1/8", FW: 3/4", ID: 3/8"
	78-050	756-0365	Flat Idler Pulley, OD: 4-1/8", FOD: 3-1/2", W: 1-1/16", FW: 3/4", ID: 3/8"
	34-041	756-0627	Flat Idler Pulley, OD: 4-1/8", FOD: 3-1/2", W: 1-1/4", FW: 7/8", ID: 3/8"
	78-046	756-1229	Flat Idler Pulley, OD: 4-7/8", FOD: 4", W: 1", FW: 3/4", ID: 3/8"
	78-047	756-3105	Flat Idler Pulley, OD: 5-3/4", FOD: 5", W: 1-1/2", FW: 1", ID: 3/8"
	78-028	756-0981A	Flat Idler Pulley, OD: 3-1/8", FOD: 2-3/4", W: 1-1/4", FW: 7/8", ID: 3/8"
11	44-101	756-0603	Spindle Pulley Double
12	75-008	754-0230	PTO Belt, for 50" Cut, 1/2" x 56-1/4"
	75-035	754-0350	PTO Belt, for 46" Cut, fits 800 Series, 5/8" x 64-1/4"
	75-159	754-0439	PTO Belt, for 46" Cut, fits 600 Series, 5/8" x 60-1/4"
	75-362	754-0474	PTO Belt, for 46" Cut, fits 600 Series with Electric PTO, 5/8" x 101-1/2"
	75-264	754-0486A	PTO Belt, for 46" Cut (2000 & Later) with Manual PTO, 5/8" x 67-1/4"
13	75-079	754-0197	Deck Belt, for 50" Cut, fits 900 Series, 1/2" x 117-1/8"
	75-021	754-0349	Deck Belt, for 46" Cut, fits 800 Series, 1/2" x 79-5/16"
	75-161	754-0440	Deck Belt, for 46" Cut, fits 600 Series, 1/2" x 99-3/16"
	75-364	754-0476	Deck Belt, for 46" Cut Auto Drive with Electric PTO, 5/8" x 100-1/4"
	75-994	754-0642	Deck Belt, for 54" Cut Auto Drive with Electric PTO, 5/8" x 138-3/16"
14	65-221	784-300	Blade Adapter

Murray 38", 40", & 42"

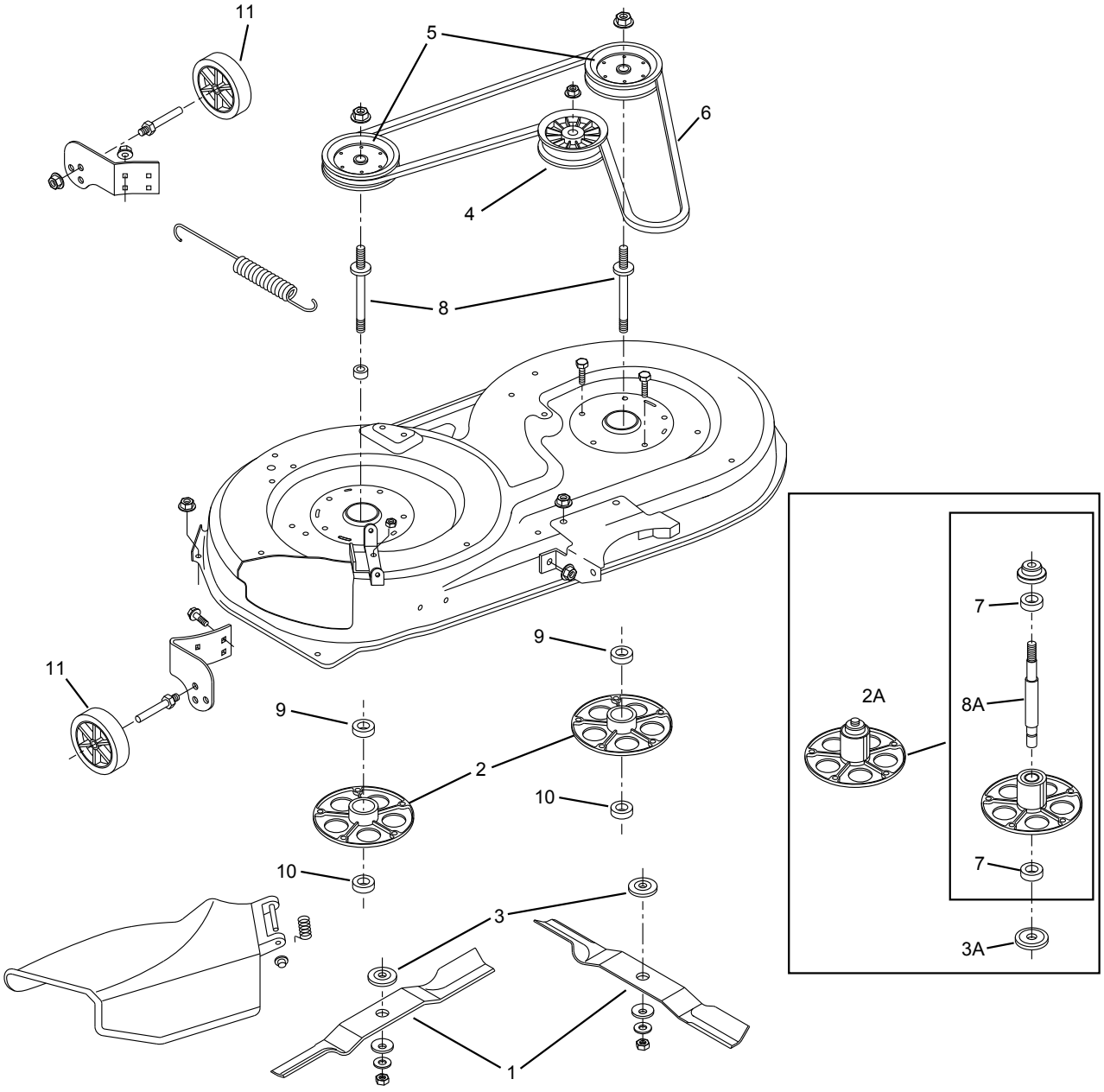

Murray 38", 40", & 42"

№	Part No.	OEM №	Description
Blades for 38" Decks with 13/16" Round Center Hole			
	97-010	92003E701MA	Low-Lift, 19-1/2"
	97-107	91742E701MA	High-Lift, 19-1/2"
1	97-118	91742E701MA	High-Lift, Heavy-Duty, 19-1/2"
	97-021	95104E701MA	Mulching, 19-1/2"
	597-602		Gator® G5™, 19-1/2"
Blades for 40" Decks with 7/8" Round Center Hole			
	97-006	92002E701MA	Low-Lift, 20-3/8"
	97-109	91871E701MA	High-Lift, 20-3/8"
1	97-119	91871E701MA	High-Lift, Heavy-Duty, 20-3/8"
	97-604		Gator G3™, 20-3/8"
Blades for 42" Decks with 13/16" Round Center Hole			
	97-020	92419E701MA	Low-Lift, 21-1/4"
	97-014	92419E701MA	Low-Lift, Heavy-Duty, 21-1/4"
	97-008	92418E701MA	High-Lift, 21-1/4"
1	97-013	95101E701MA	High-Lift, Heavy-Duty, 21-1/4"
	97-005	56252E701MA	Mulching, 21-1/4"
	97-601		Gator G3, 21-1/4"
	597-601		Gator G5, 21-1/4"
Replacement Parts			
2	82-243	92574	Spindle Assembly
	82-023	92574	Spindle Assembly, Magnum, Heavy-Duty Version of Oregon 82-243
3	65-208	92466	Blade Adapter
3A	65-204	690411	Blade Adapter
4	34-822	91801	Idler Pulley
5		92852	Spindle Pulley, for 38" Decks
		92851	Spindle Pulley, for 40" Decks
	44-339	94199	Spindle Pulley, for 42" Decks, OD: 5-3/8"
	44-343	92425	Spindle Pulley, for 42" Decks, OD: 6-1/4"
6	75-266	37x86	Deck Belt, for 38", 1/2" x 84-11/16"
	75-041	37x62	Deck Belt, for 40", 1/2" x 86-3/8"
	75-135	37x88	Deck Belt, for 42", 1/2" x 89-5/8"
7	45-257	1001196	Spindle Bearing
8	85-028	94129	Spindle Shaft
8A		1001195	Spindle Shaft
9	45-243		Spindle Bearing
10	45-242		Spindle Bearing
11	72-094	92683	Deck Wheel

Murray 46" (1999–2009)

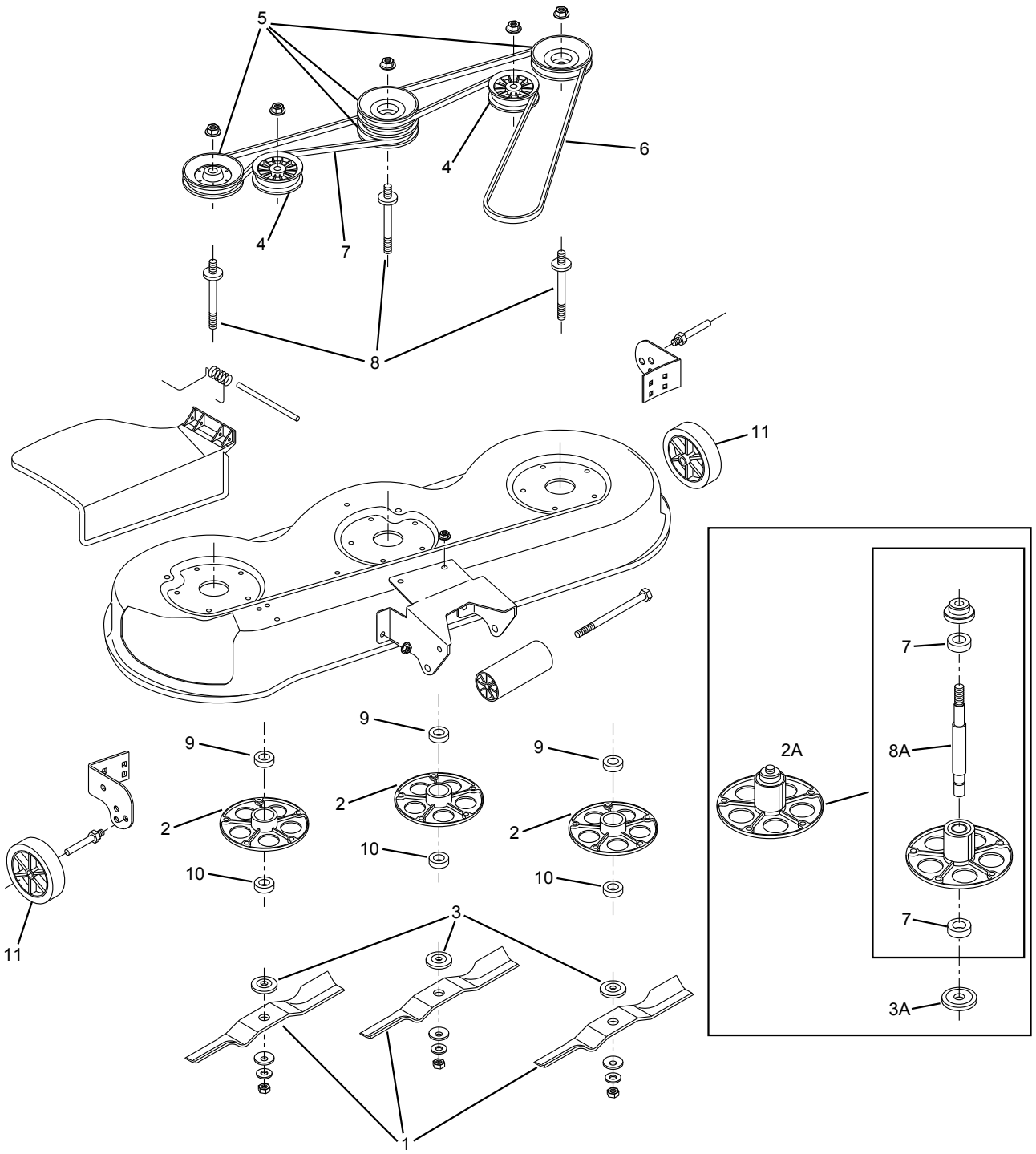

Murray 46" (1999–2009)

№	Part No.	OEM No.	Description
Blades for 46" Decks with 13/16" Round Center Hole			
	97-123	92117E701MA	High-Lift, 15-3/4"
	97-012	92117E701MA	High-Lift, Heavy-Duty, 15-3/4"
1	97-017	656631	Mulching, 15-3/4"
	97-606		Gator® G3™, 15-3/4"
	597-606		Gator G5™, 15-3/4"
Replacement Parts			
2	82-243	92574	Spindle Assembly
	82-023	92574	Spindle Assembly, Magnum, Heavy-Duty Version of Oregon® 82-243
3	65-208	92466	Blade Adapter
3A	65-204	690411	Blade Adapter
4	34-822	91801	Idler Pulley, Primary
	78-055	690387MA	Idler Pulley, Primary
4A	78-021	423238	Idler Pulley, Secondary
5	44-331	94592	Spindle Pulley
6	75-129	37X89	Deck Belt, Primary, 1/2" x 87-3/8"
7	45-257	1001196	Spindle Bearing
8	85-028	94129	Spindle Shaft
8A		1001195	Spindle Shaft
9	45-243		Spindle Bearing
10	45-242		Spindle Bearing
11	72-094	92683	Deck Wheel
12		310071	Deck Roller
13	75-094	37X66	Deck Belt, Secondary, 1/2" x 47-5/16"

Toro TimeCutter with 42" Decks

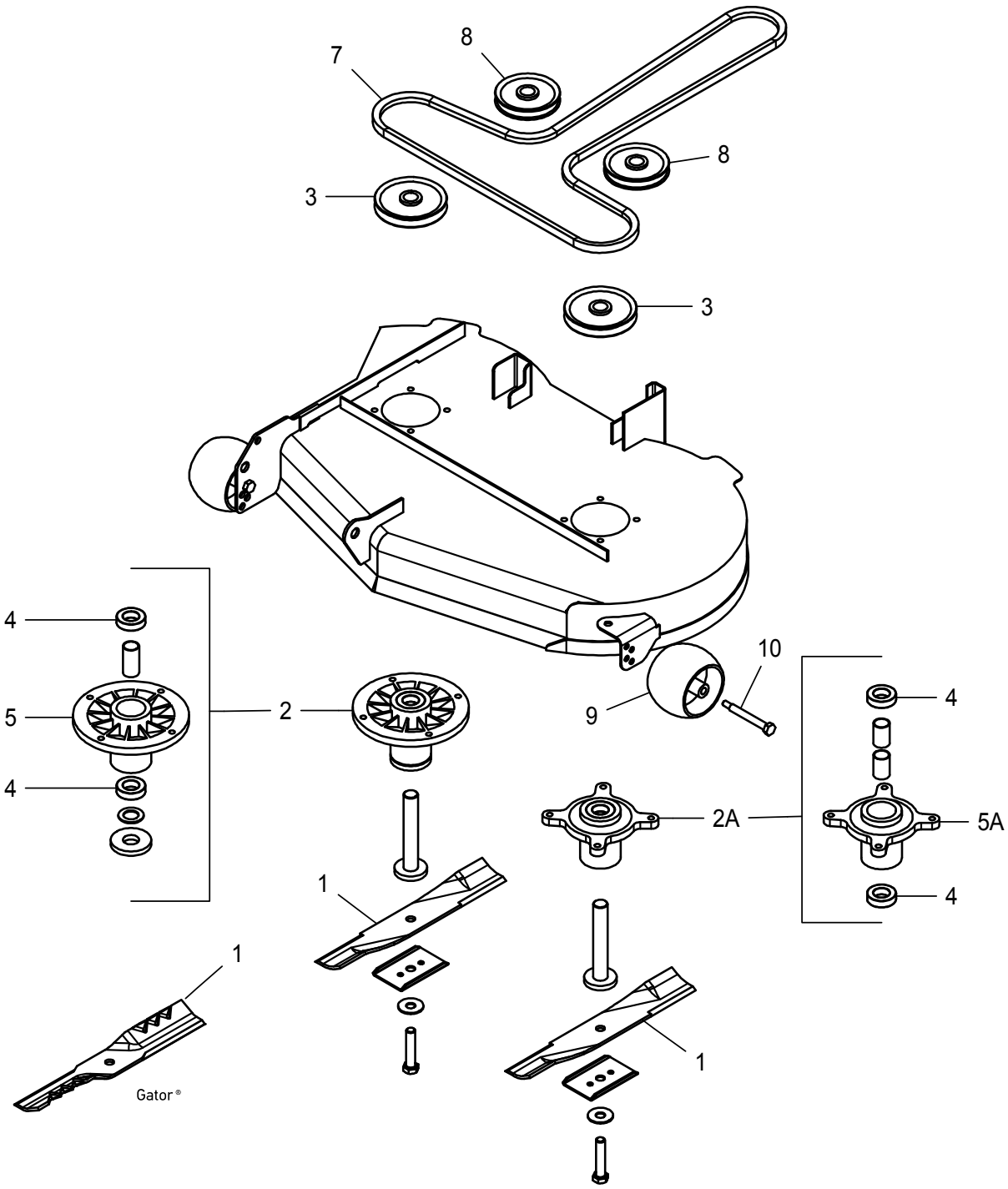

Toro TimeCutter with 42" Decks

№	Part No.	OEM No.	Description
Blades for 42" Decks with 5/8" Round Center Hole			
	94-069	110-6568-03, 117-5372-03	Standard-Lift, 21-9/16"
1	94-068	106-2247-03	Mulching, 21-9/16"
	96-362		Gator® G3™, 21-9/16"
Replacement Parts			
2		107-9161	Spindle Assembly, Z
3		125-5574, 110-6864	Spindle Pulley
4	45-257	100-1048	Spindle Bearing, OD: 1.574" ID: 0.669" Width: 0.470"
5		88-4510	Spindle Housing, Z
6		117-1192, 110-6866	Spindle Shaft, Z
2A		121-0751	Spindle Assembly, SS & MX
5A		117-7439, 117-7267	Spindle Housing, SS & MX
6A		117-7268	Spindle Shaft, SS & MX
7	115-145	110-6871	Deck Primary Drive Belt, Z, 1/2" x 112-3/4"
7	15-142	119-8819	Deck Primary Drive Belt, SS & MX, 1/2" x 113-1/2"
8		106-2175	Flat Idler
9	72-311-1	1-603299, 68-2730	Gauge Wheel, 5" x 2-3/4"
10	72-163	126-2928	Gauge Wheel, Bolt Kit

Toro Titans with 48" Decks

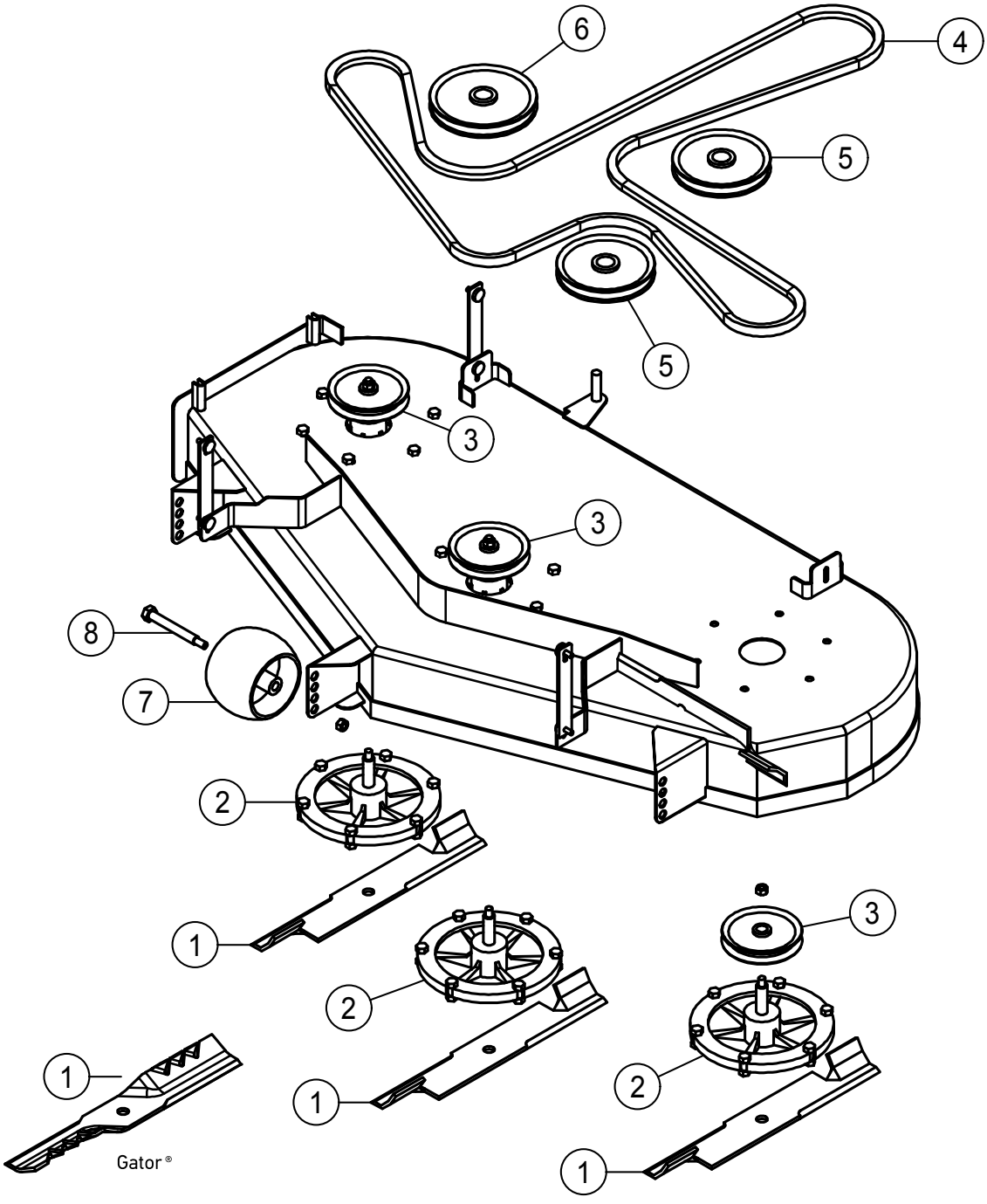

Toro Titans with 48" Decks

№	Part No.	OEM No.	Description
Blades for 48" Decks with 15/16" Round Center Hole			
1	92-029	109-6872	Standard-Lift, 16-1/4"
	92-026		Mulching, 16-1/4"
	96-321		Gator® G3™, 16-1/4"
	596-321		Gator G5™, 16-1/4"
Replacement Parts			
2		121-5681, 109-6394	Spindle Assembly
3		116-4875, 109-3747	Spindle Pulley
4	15-005	109-5364	Deck Primary Drive Belt, 1/2" x 146-1/4"
5		109-8891, 109-3658	Flat Idler
6		116-3626, 1-603843	Flat Idler
7		109-6388	Gauge Wheel
8		112-3977	Gauge Wheel Bolt

Toro TimeCutters with 50" Decks

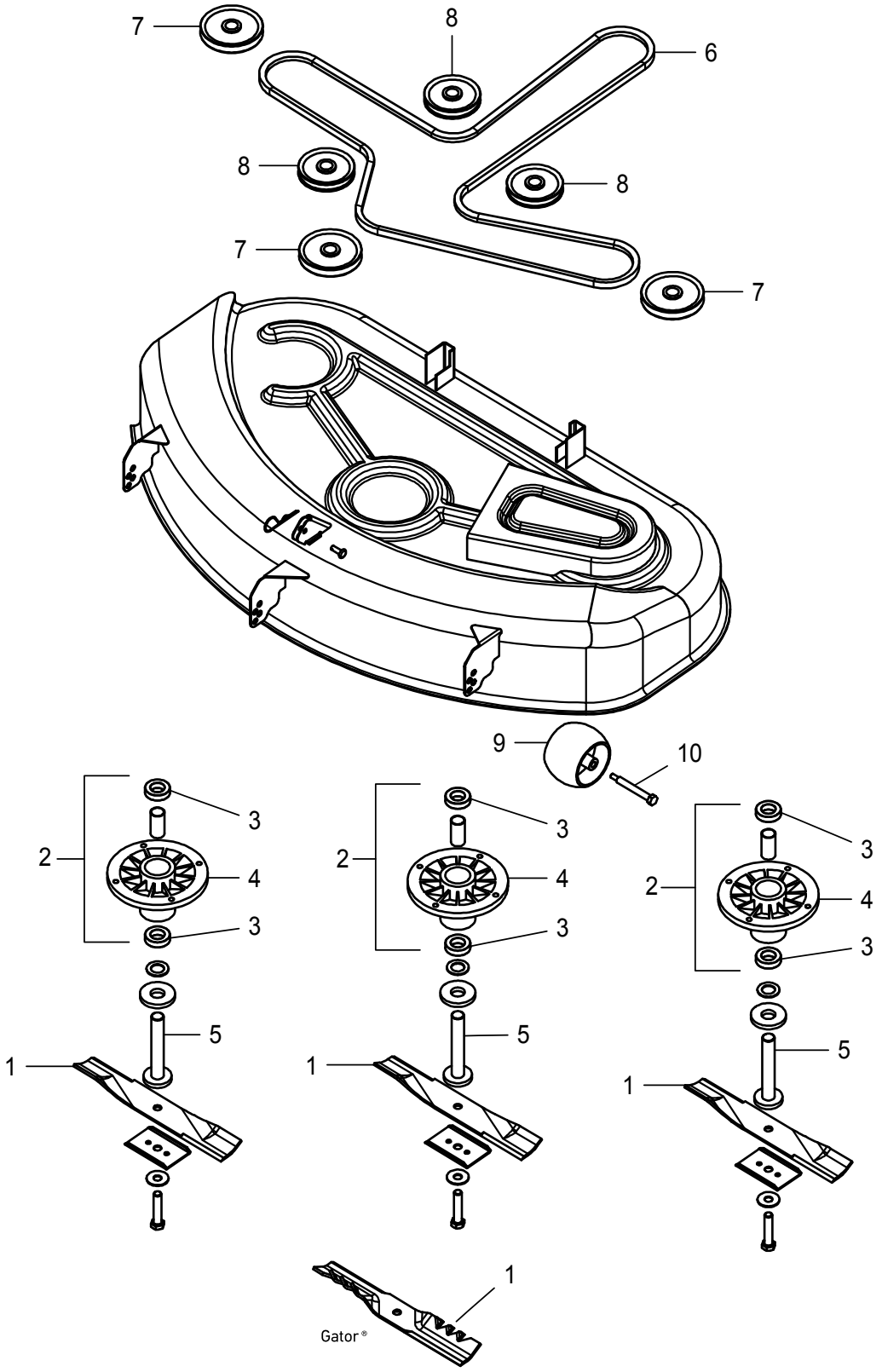

Toro TimeCutters with 50" Decks

№	Part No.	OEM No.	Description
Blades for 50" Decks with 5/8" Round Center Holes			
1	94-063	112-9759-03	Standard-Lift, 17-1/2"
	96-382		Gator® G3™, 17-1/2"
Replacement Parts			
2		107-9161	Spindle Assembly
3	45-257	100-1048	Spindle Bearing, OD: 1.574", ID: 0.669", Width: 0.470"
4		88-4510	Spindle Housing
5		117-1192, 110-6866	Spindle Shaft
6		110-6892	Deck Primary Drive Belt
7		125-5575, 110-6865	Spindle Pulley
8		106-2175	Flat Idler
9	72-311-1	1-603299, 68-2730	Gauge Wheel 5" x 2-3/4"
10	72-163	126-2928	Gauge Wheel Bolt

Toro TimeCutters with 52" Decks

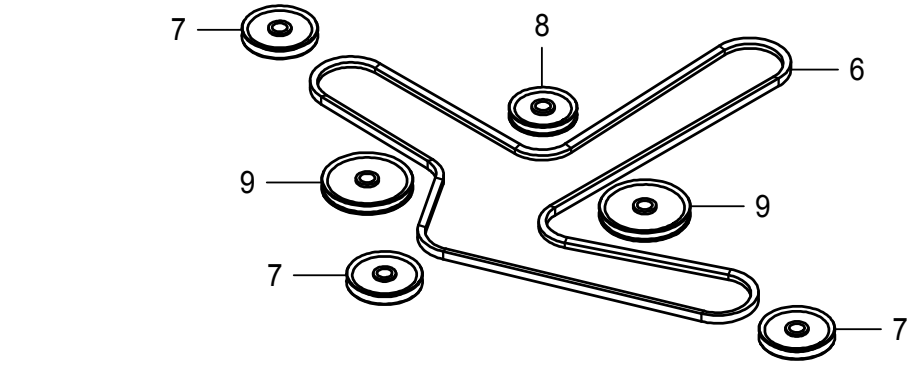

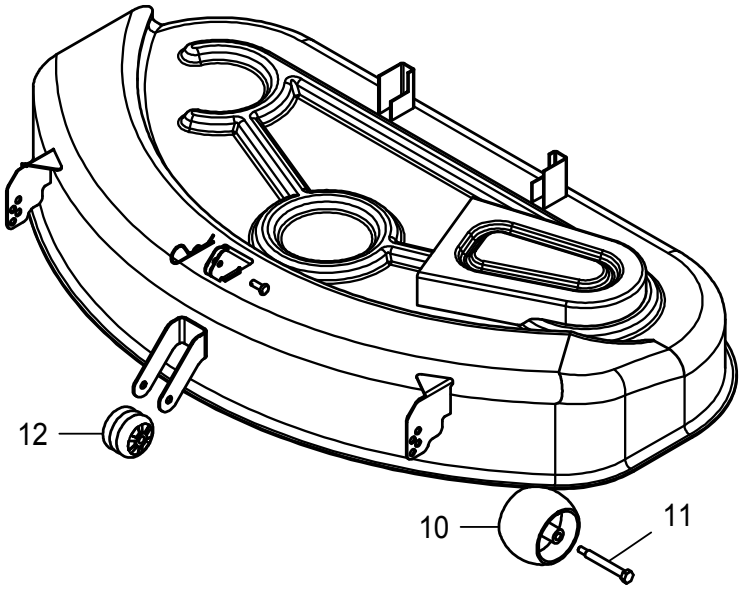

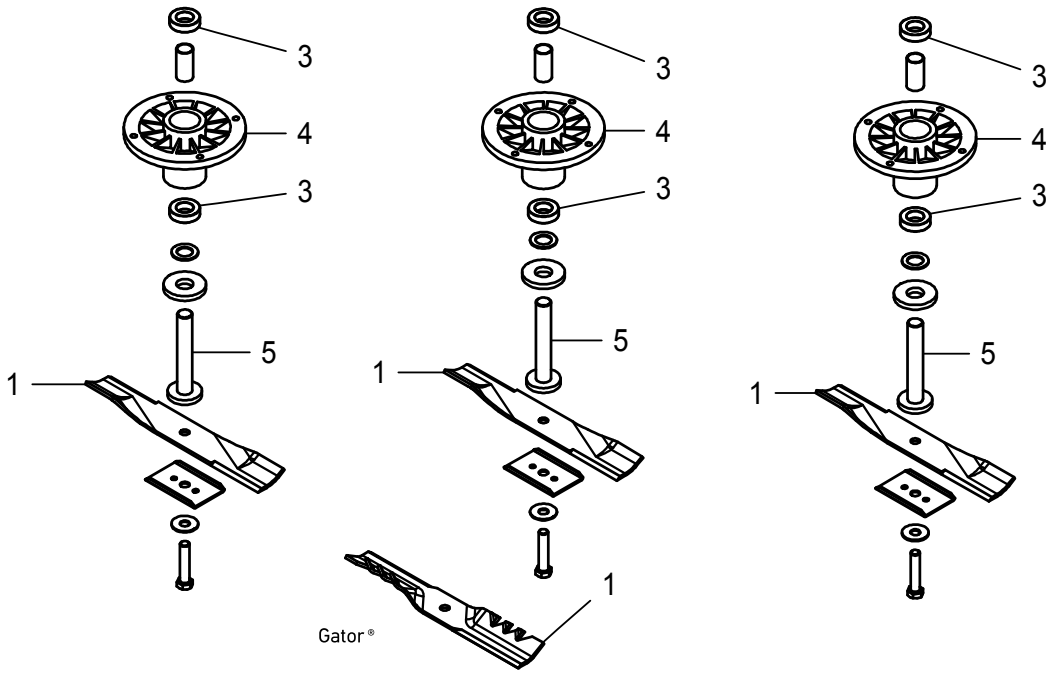

Toro TimeCutters with 52" Decks

№	Part No.	OEM No.	Description
Blades for 52" Decks with 5/8" Round Center Holes			
1	94-064	107-1741-03	Standard-Lift, 18"
	96-395		Gator® G3™, 18"
Replacement Parts			
3	45-257	100-1048	Spindle Bearing, OD: 1.574", ID: 0.669", Width: 0.470"
4		107-1739	Spindle Housing
5		80-4341	Spindle Shaft
6		106-2217	Deck Primary Drive Belt
7		107-1740	Spindle Pulley
8		116-4669, 99-8912	Flat Idler
9	78-006	1-613098	Flat Idler, Uses 2
10	72-311-1	1-603299, 68-2730	Gauge Wheel, 5" x 2-3/4"
11	72-163	126-2928	Gauge Wheel Bolt
12	72-029	29-4820	Deck Roller, 2-3/4" x 3"

Bobcat 36", 48", 54", & 61" XM Series Walk-Behind Mowers

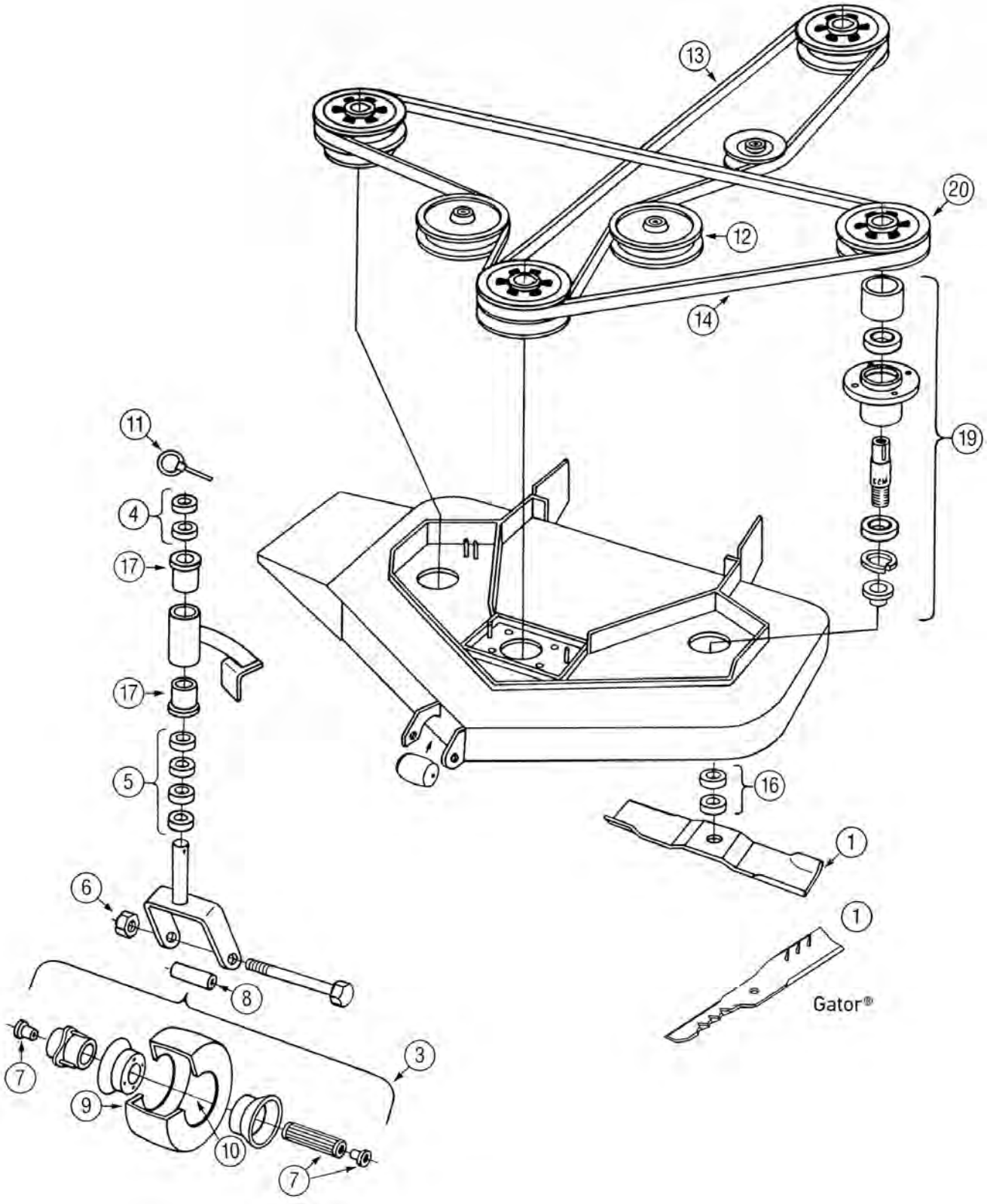

Bobcat 36", 48", 54", & 61" XM Series Walk-Behind Mowers

№	Part No.	OEM No.	Description
Blades for 36" Decks with 5/8" Round Center Hole			
1	93-010	112111-02	Standard Blade
	93-601		Gator® G3™, 2 for 36" Deck
	593-600		Gator G5™, 2 for 36" Deck, 3 for 54" Deck, 16-1/4"
Blades for 48" Decks with 5/8" Round Center Hole			
1	93-009	112111-01	Standard Blade
	593-601		Gator G5, 3 for 48" Deck, 18"
Blades for 54" Decks with 5/8" Round Center Hole			
1	93-010	112111-02	Standard Blade
	93-601		Gator G3, 2 for 36" Deck
	593-600		Gator G5, 2 for 36" Deck, 3 for 54" Deck, 16-1/4"
Blades for 61" Decks with 5/8" Round Center Hole			
1	93-011	112111-03	Standard Blade
	596-702		Gator G5, 3 for 61" Deck
	396-702		Gator G6®, 3 for 61" Deck
Replacement Parts			
3	72-795		Wheel Assembly
4	09-808	64163-07	Spacer, 1/4" x 1"
5	09-803	64163-22	Spacer, 1-3/4" x 1"
6		64151-12	NLA
7	45-121	38273/38274	Bearing & Caps
8	45-188	43180	Spanner
9	58-131	118123	Tire, 9" x 350-4
10	71-109		Tube
11	02-446	64173-04	Linchpin, 7/16"
12	78-111	38297	Flanged Idler Pulley
13		38470	Engine/Deck Belt, 36"
14	75-180	38440	Deck Drive Belt, 48", 5/8" x 85-1/4"
	75-128	38389	Deck Drive Belt, 36", 5/8" x 56-5/16"
16	09-802	64163-14	Spacer, 1/4"
17	48-320	48053-2A	Bushing
19	82-320	36567	Spindle Assembly
20	78-649	31012A	Spindle Pulley

Bunton 36" Walk-Behind Mower

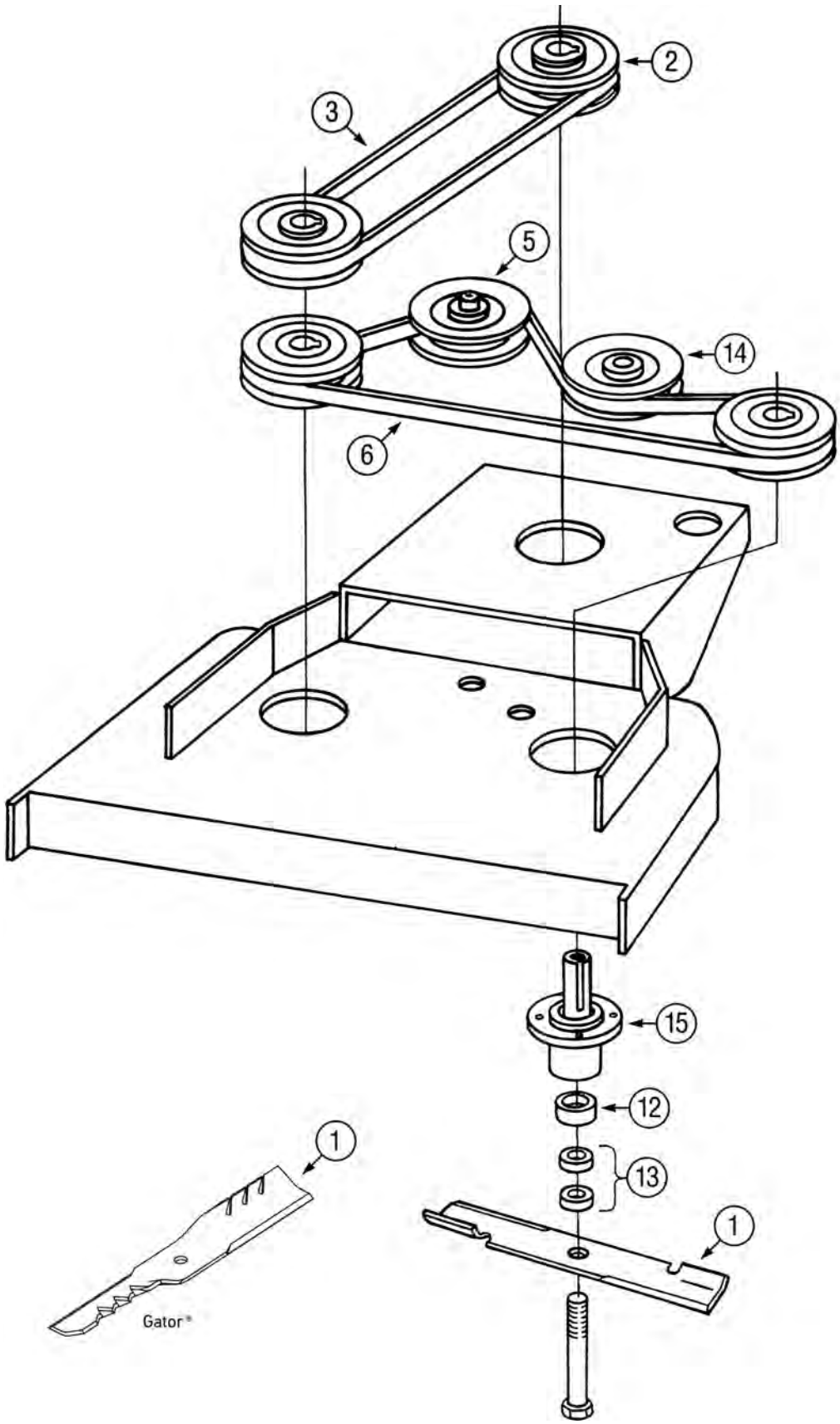

Bunton 36" Walk-Behind Mower

№	Part No.	OEM No.	Description
Blades for 36" Decks with 5/8" Round Center Hole			
	91-637	PL4206	Standard, Notched-Lift, 18"
	91-623	PL4206	High, Notched-Lift, 18"
1	96-344		Gator® G3™, 18"
	596-344		Gator G5™, 18"
	396-726		Gator G6®, 18"
Replacement Parts			
2	78-646	PL1246	Engine Pulley
3	75-558	PLO661	Belt, for Engine-to-Deck, 5/8" x 58"
5	78-121	PL8540A	V-Pulley, Idler
6	75-223	PLO643	Blade Belt, 1/2" x 50-3/8"
13	09-802	PLO617	Spacer, 1/4"
14	78-041	PL0786	Pulley, Idler
15	82-308	PAL0806	Spindle Assembly

Bunton 48" & 52" Old Style "V" Decks

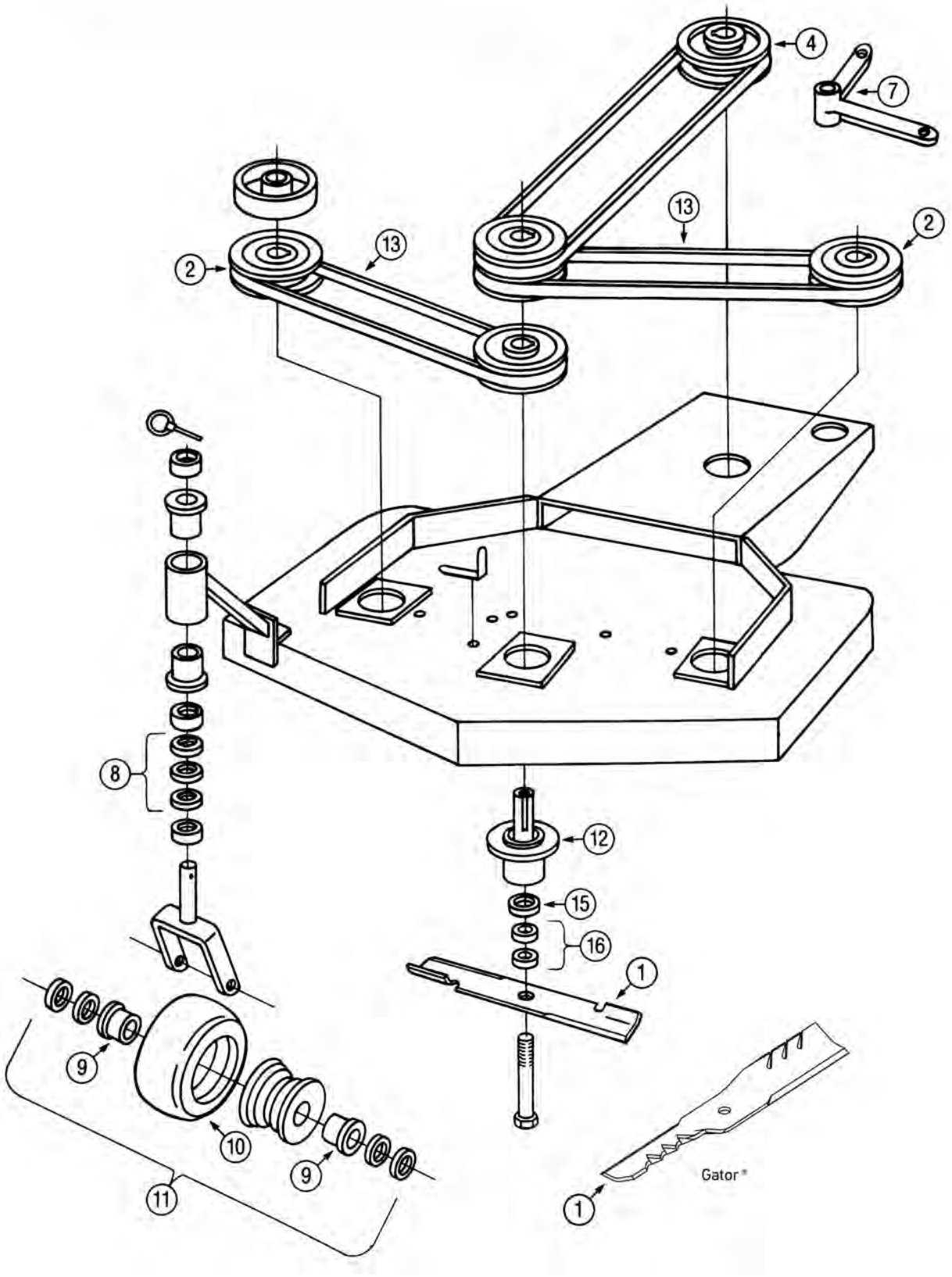

Bunton 48" & 52" Old Style “V” Decks

№	Part No.	OEM No.	Description
Blades for 48" Decks with 5/8" Round Center Hole			
	91-620	PL4205	Standard-Lift, 16-1/2"
	91-621		High-Lift, 16-1/2"
1	96-308		Gator® G3™, 16-1/2"
	596-308		Gator G5™, 16-1/2"
	396-735		Gator G6®, 16-1/2"
Blades for 52" Decks with 5/8" Round Center Hole			
	91-637	PL4206	Standard, Notched-Lift, 18"
	91-623	PL4206	High, Notched-Lift, 18"
1	96-344		Gator G3, 18"
	596-344		Gator G5, 18"
	396-726		Gator G6, 18"
Replacement Parts			
2	78-644	PL0622	Pulley
4	78-646	PL1246	Engine Pulley
8	09-804	PJH1054	Caster Spacer, 1/2"
9	45-010	PLO941	Bearing
10	58-133	PLO959A	Tire, 410/350-5
11		PALO942A	Wheel Assembly
12	82-308	PALO8060	Spindle Assembly
13	75-446	PL4813	Blade Belt, 1/2" x 46"
16	09-802	PLO617	Blade Spacer, 1/4"

Bunton 48" & 52" Hydro & Belt Drive Walk-Behind Mower

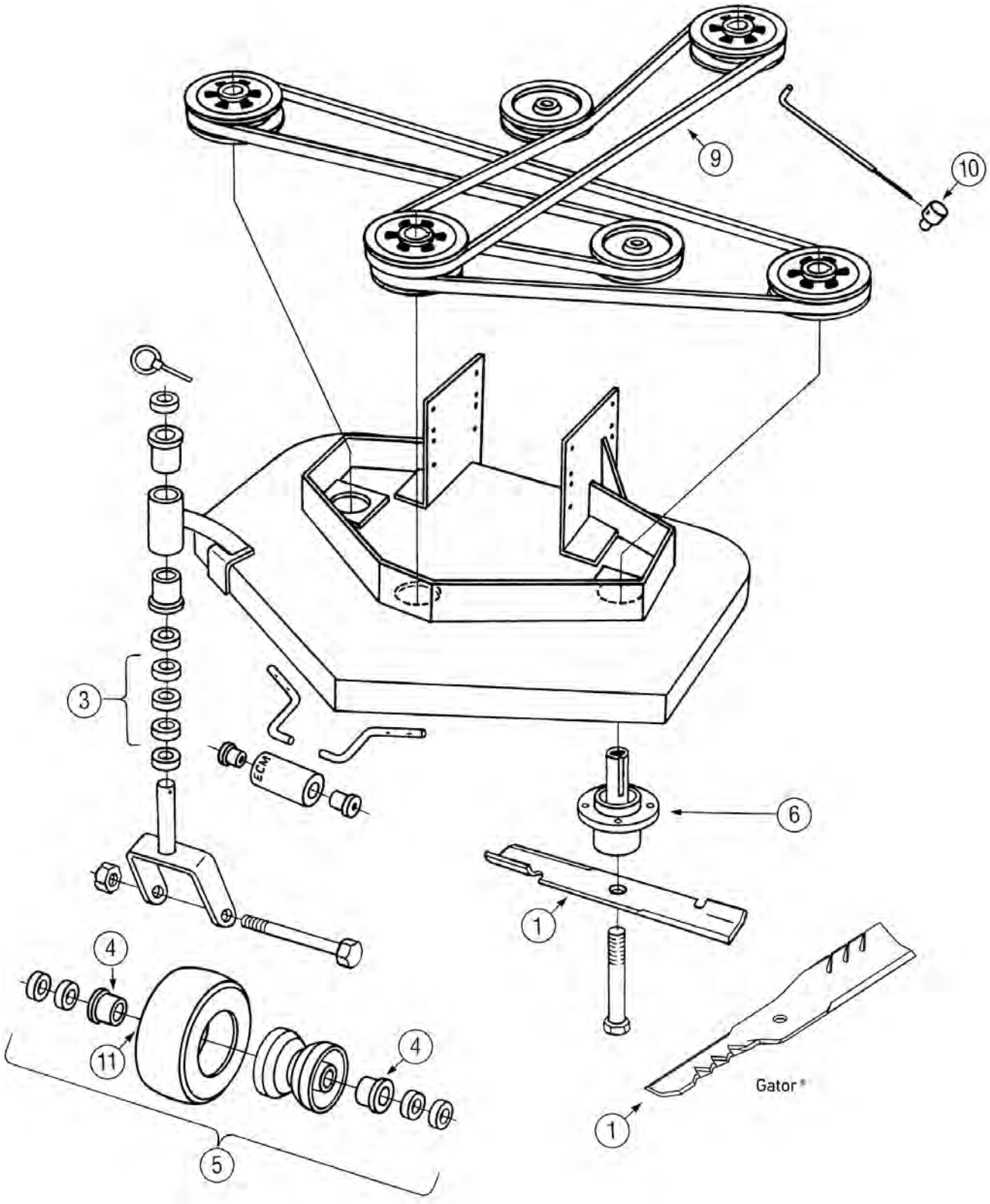

Bunton 48" & 52" Hydro & Belt Drive Walk-Behind Mower

№	Part No.	OEM No.	Description
Blades for 48" Decks with 5/8" Round Center Hole			
	91-620	PL4205	Standard-Lift, 16-1/2"
	91-621		High-Lift, 16-1/2"
1	96-308		Gator® G3™, 16-1/2"
	596-308		Gator G5™, 16-1/2"
	396-735		Gator G6®, 16-1/2"
Blades for 52" Decks with 5/8" Round Center Hole			
	91-637	PL4206	Standard, Notched-Lift, 18"
	91-623	PL4206	High, Notched-Lift, 18"
1	96-344		Gator G3, 18"
	596-344		Gator G5, 18"
	396-726		Gator G6, 18"
Replacement Parts			
3	09-804	PJH1054	Caster Spacer, 1/2"
4	45-010	PLO941	Bearing
5		PAL0942A	Wheel Assembly
6	82-308	PALO806A	Spindle Assembly
9	75-563	PL4732	Deck Belt, for 48" Cut Engine-to-Deck, 5/8" x 63"
	75-565	PL4739	Deck Belt, for 52" Cut Engine-to-Deck, 5/8" x 65"
10		PLO355	Swivel
11	58-133	PLO958	Tire, 410/350-5

Dixie Chopper 42" thru 74" Deck Mower

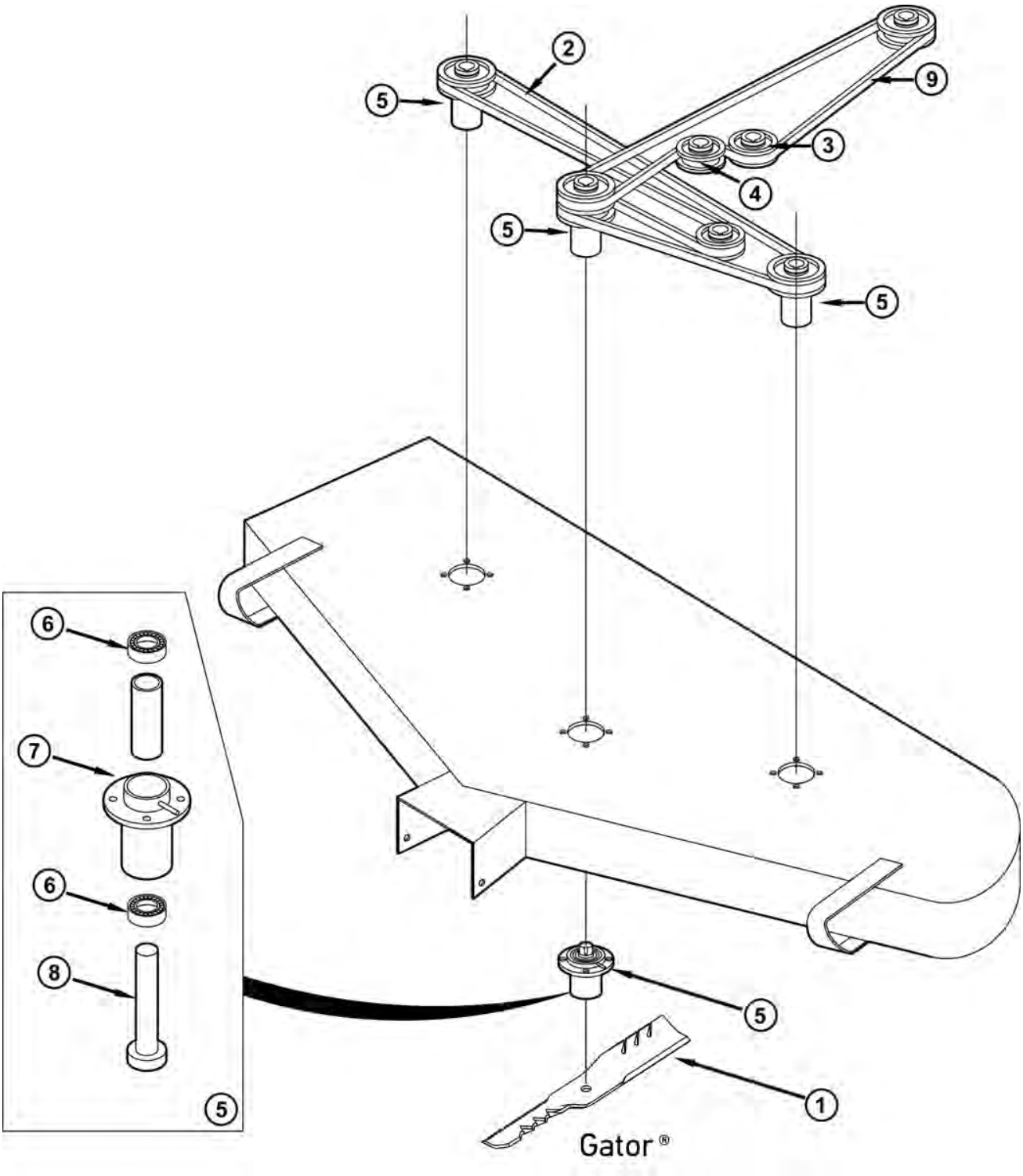

Dixie Chopper 42" thru 74" Deck Mower

№	Part No.	OEM No.	Description
Blades for 42" Decks with 5/8" Round Center Hole			
1	91-501	30227-42	Standard-Lift, 14-1/2"
	396-714		Gator® G6®, 14-1/2"
Blades for 50" Decks with 5/8" Round Center Hole			
1	91-502	30227-50	Standard, 17"
	91-508	30227-50H	Standard, High-Lift 17"
	91-505	30227-50V	High, Notched-Lift 17"
	91-525	30227-50X	Standard, 17"
	596-323		Gator G5™, 17"
	396-723		Gator G6, 17"
Blades for 60" Decks with 5/8" Round Center Hole			
1	91-503	30227-60	Standard, 20-1/2"
	91-509	30227-60H	Standard, High-Lift, 20-1/2"
	91-506	30227-60V	High, Notched-Lift, 20-1/2"
	90-109	30227-60N	High-Lift, Heavy-Duty, 20-1/2"
	91-527	30227-60X	X-Style, 20-1/2"
	96-319		Gator G3™, 20-1/2"
	596-319		Gator G5, 20-1/2"
	396-740		Gator G6, 20-1/2"
Blades for 66" Decks with 5/8" Round Center Hole			
1	91-528	30227-66X	X-Style, 23-5/16"
	396-524		Gator G6, 23-5/16"
Blades for 72" Decks with 5/8" Round Center Hole			
1	91-507	30227-72H	Standard, High-Lift, 24"
	91-515	30227-72N	High-Lift, Heavy-Duty, 24"
	596-752		Gator G5, 24"
	396-752		Gator G6, 24"
Blades for 74" Decks with 5/8" Round Center Hole			
1	91-526	30227-74X	X-Style, Excalibur, 26"
	391-526		Gator G6, 26"
Replacement Parts			
2	75-283	30203	Deck Drive Belt, for 50", 5/8" x 104-3/4"
	75-211	30236-0	Deck Drive Belt, for 60", 5/8" x 128-5/16"
3	78-010	30234	V-Idler Pulley, for 42", 50", & 60"
4	78-009	30224	Flat Idler Pulley, for 42", 50", & 60"
5	82-323	10161-L	Center Spindle Assembly, for 42", 50", & 60"
	82-322	10161	OutSide Spindle Assembly, for 42", 50", & 60"
6	45-263	30218	Bearing
7		30241	Spindle Housing, for 42", 50", & 60"
8		30217L	Spindle Shaft, for 42", 50", & 60"
		30217	Spindle Shaft, for 42", 50", & 60"
9	75-208	30204	Engine-to-Deck Belt, for 50", 5/8" x 81-1/16"
	75-199	65080	Engine-to-Deck Belt, for 60", 5/8" x 83-1/8"

Encore Prowler 52" & 61" Deck Mowers

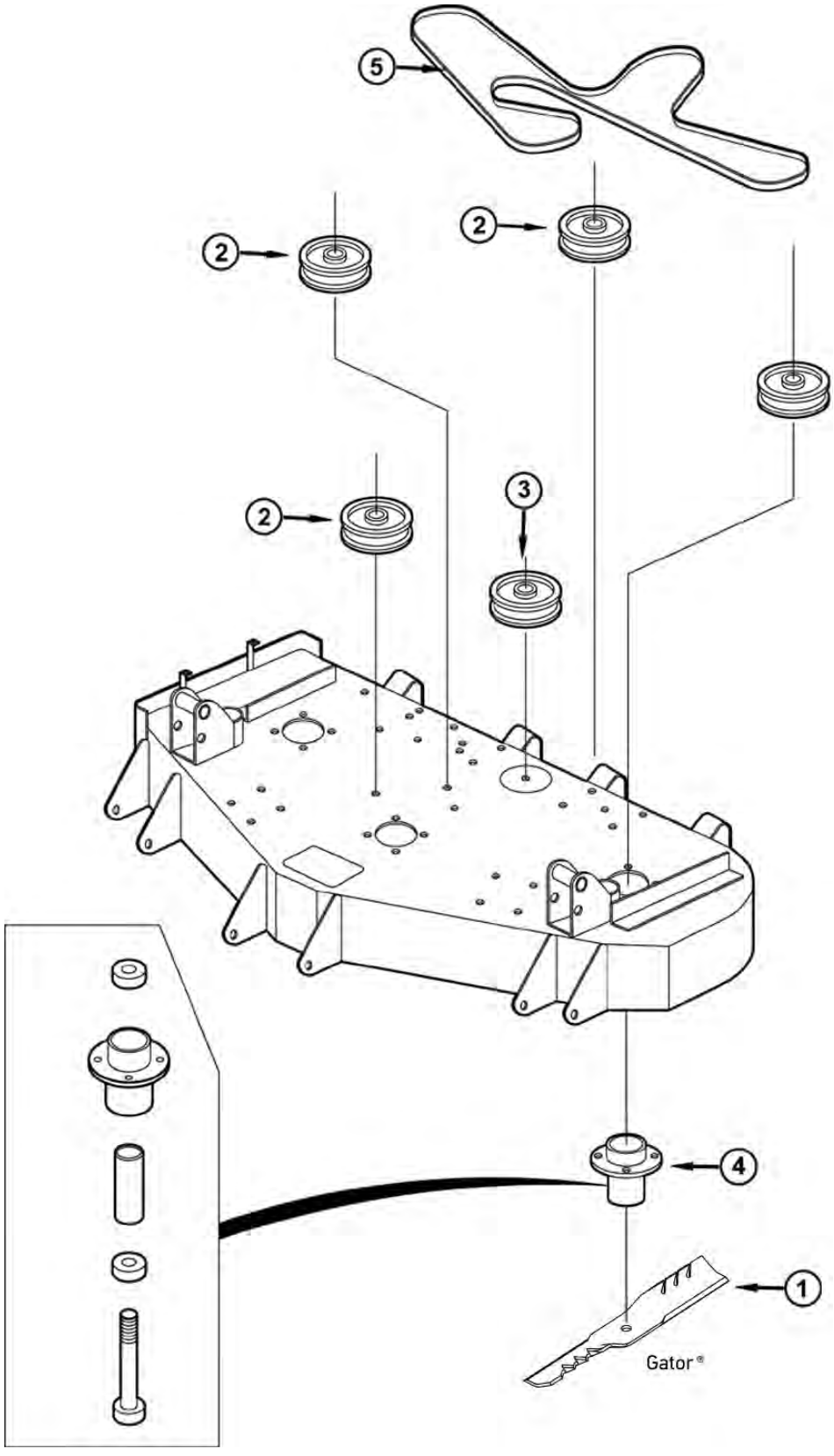

Encore Prowler 52" & 61" Deck Mowers

№	Part No.	OEM No.	Description
Blades for 52" Decks with 5/8" Round Center Hole			
1	91-622	363291	Standard-Lift, 18"
	96-344		Gator® G3™, 18"
	596-344		Gator G5™, 18"
	396-726		Gator G6®, 18"
Blades for 61" Decks with 5/8" Round Center Hole			
1	91-135	823006	Standard-Lift, 21"
	596-702		Gator G5, 21"
	396-702		Gator G6, 21"
Replacement Parts			
2		523329	Flat Idler Pulley, for 52" & 61"
3	78-642	363216	Taper Lock Pulley, for 52"
4		583106	Spindle Assembly, for 52" & 61"
5		823243	Deck Belt, for 52" & 61"

Encore 36", 48", 52", & 60" Walk-Behind Mowers

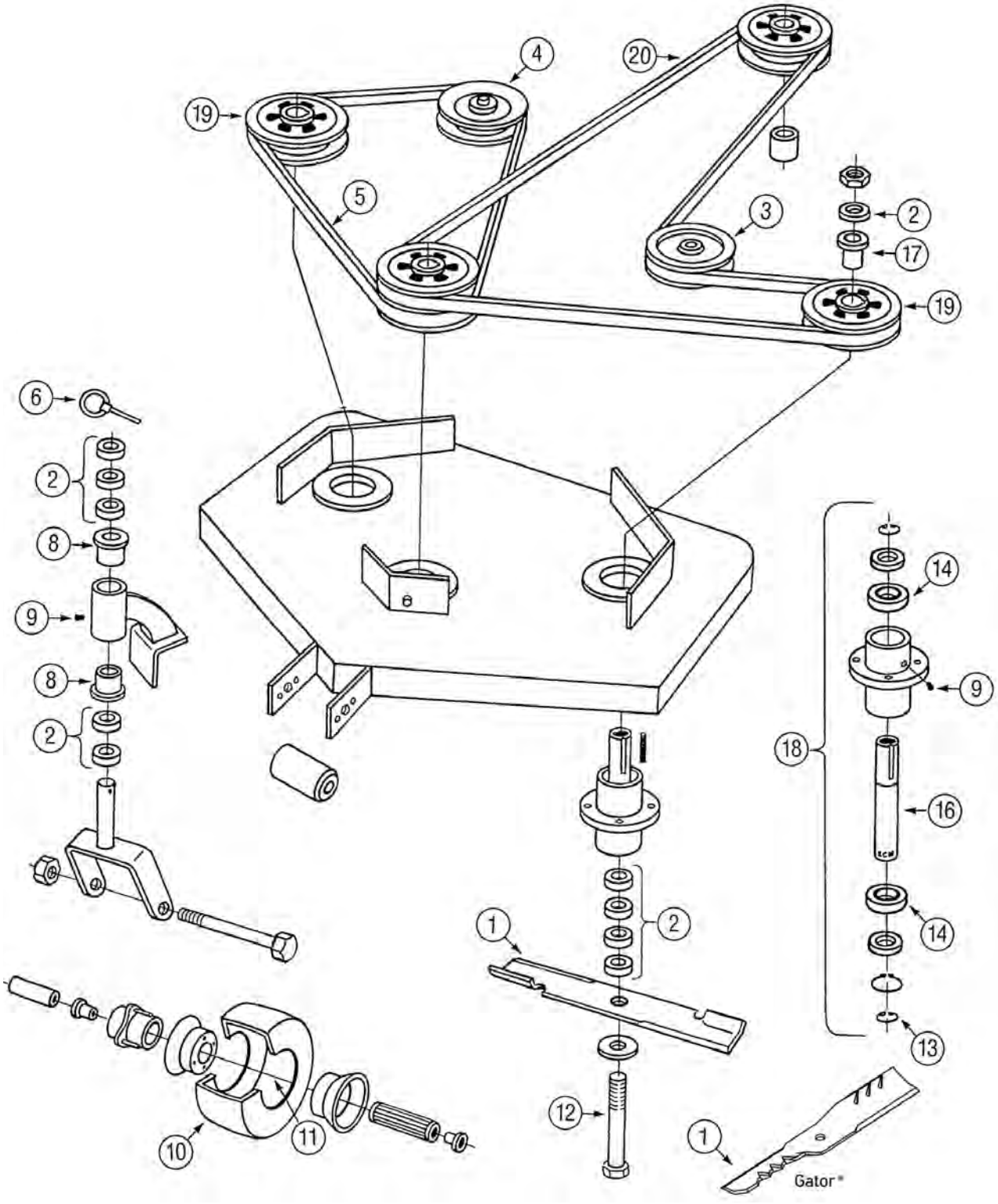

Encore 36", 48", 52", & 60" Walk-Behind Mowers

№	Part No.	OEM No.	Description
Blades for 36" Decks with 5/8" Round Center Hole			
1	91-622	363291	Standard-Lift, 18"
	96-344		Gator® G3™, 18"
	596-344		Gator G5™, 18"
	396-726		Gator G6®, 18"
Blades for 48" Decks with 5/8" Round Center Hole			
1	91-266	483035	Standard-Lift, 16-3/8"
	96-328		Gator G3, 16-3/8"
Blades for 52" Decks with 5/8" Round Center Hole			
1	91-622	363291	Standard-Lift, 18"
	96-344		Gator G3, 18"
	596-344		Gator G5, 18"
	396-726		Gator G6, 18"
Blades for 60" Decks with 5/8" Round Center Hole			
1	91-259	603035	Standard-Lift, 20-1/4"
	591-259		Gator G5, 20-1/4"
Replacement Parts			
2	48-141	363170	Spacer, 1/4"
3	78-300	363264	Idler Pulley
4	78-121	483025	Idler Pulley, V-Groove
5	75-552		Blade Belt, for Right-Hand, 52", 5/8" x 52"
6	02-446		Lynch Pin, 7/16"
8	48-320		Caster Support Arm Bushing
9	02-010-1		Grease Fitting
10	58-132		Tire, Smooth, 410/350-4
11	71-274		Tube
12	04-125		Blade Bolt
14	45-220	363146	Bearing, Heavy-Duty
16	82-305	363058	Spindle Shaft
17		363127	Pulley Bushing
18		362044	Spindle Assembly
19	78-642	363216	Pulley
20	75-031	483030	Engine/Deck Belt, for 48" Deck, 5/8" x 88-1/4"
	75-582	363210	Engine/Deck Belt, for 36" Deck, 5/8" x 82"

Exmark 36", 48", & 52" Viking Deck Parts

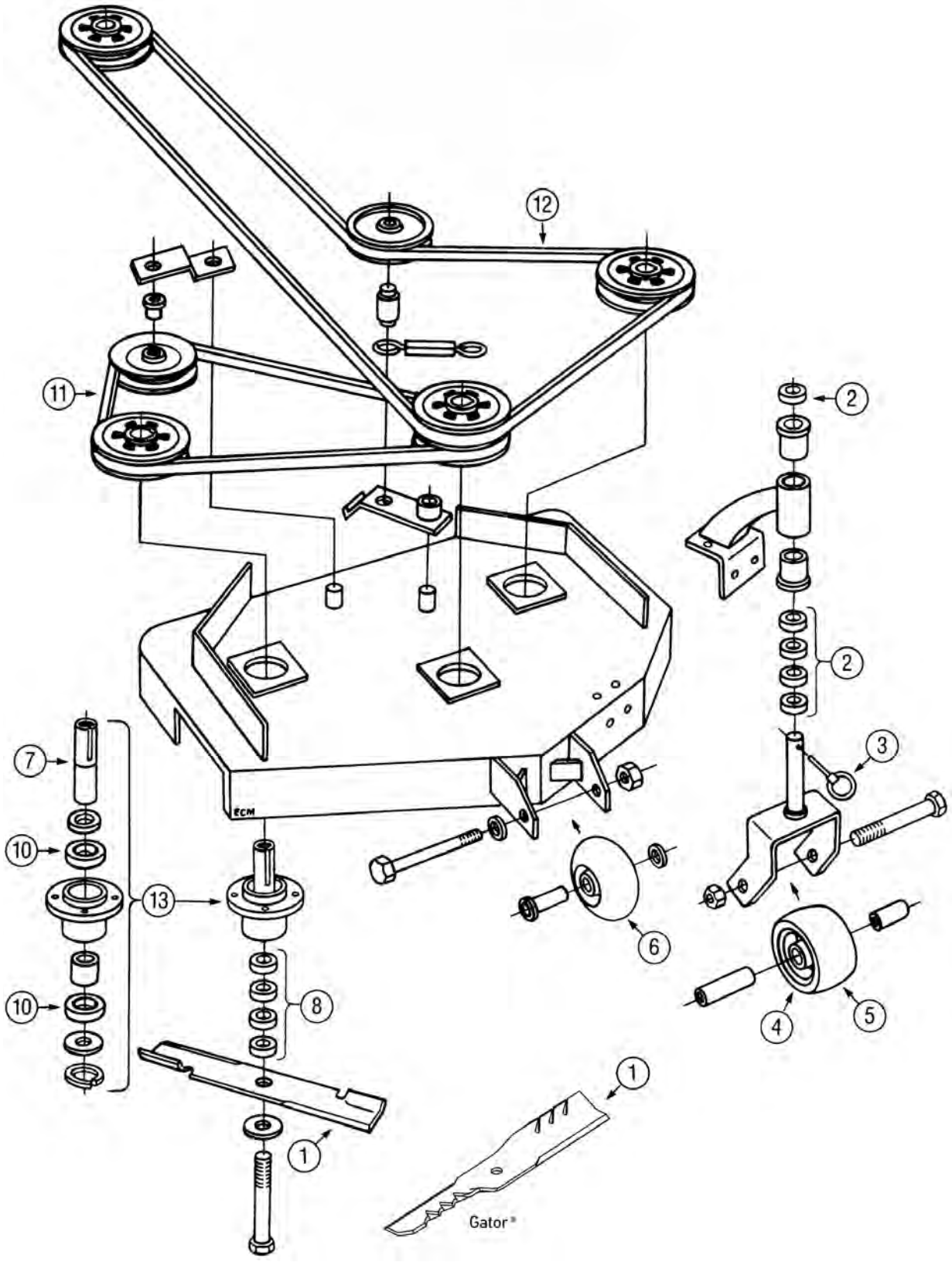

Exmark 36", 48", & 52" Viking Deck Parts

№	Part No.	OEM No.	Description
Blades for 36" Decks with 5/8" Round Center Hole			
1	91-181	103-2508-03	Standard-Notch Lift, 18"
	91-184	103-2508-03	Standard-Notch Lift, Heavy-Duty, 18"
	91-335	103-2518-03	Mulching, 18"
	96-344		Gator® G3™, 18"
	596-344		Gator G5™, 18"
	396-726		Gator G6®, 18"
Blades for 48" Decks with 5/8" Round Center Hole			
1	91-313	103-6583-03, 323515	Standard-Notch Lift, 16-1/4"
	91-183		Standard-Notch Lift, Heavy-Duty, 16-1/4"
	99-127	103-1577-03	Standard Rolled Lift, 16-1/4"
	91-368	103-6581-03	Mulching, 16-1/4"
	96-310		Gator G3, 16-1/4"
	596-310		Gator G5, 16-1/4"
	396-716		Gator G6, 16-1/4"
Blades for 52" Decks with 5/8 " Round Center Hole			
1	91-181	103-2508-03	Standard-Notch Lift 18"
	91-184	103-2508-03	Standard-Notch Lift, Heavy-Duty, 18"
	91-335	103-2518-03	Mulching, 18"
	96-344		Gator G3, 18"
	596-344		Gator G5, 18"
	396-726		Gator G6, 18"
Replacement Parts			
2	09-804	303314	Spacer, 1/2" Caster Yoke
3	02-446		Linchpin, 7/16"
5	58-131	513808	Tire, Slick, 9" x 350-4
6	72-311-1	603299	Roller, Anti-Scalp
7		322164	Spindle Shaft, Side LH & RH Spindle
8	09-802	303164	Spacer, 1/4"
9	45-030	303044	Bearing
10	45-220	303057	Bearing, Heavy-Duty
11	75-552	403025	Blade Belt, for 48" Cut, 5/8" x 52"
	75-048		Blade Belt, for 52" Cut, 5/8" x 56-1/8"
12	75-181	303499	Engine-to-Deck Belt, for 48" Cut, 5/8" x 56-1/8"
13	82-306	302030	Spindle Assembly, Side LH & RH Spindle
	82-307-0	402006	Spindle Assembly, Center

Exmark Lazer Z & Turf Tracer 52", 60", & 72" Deck Mowers

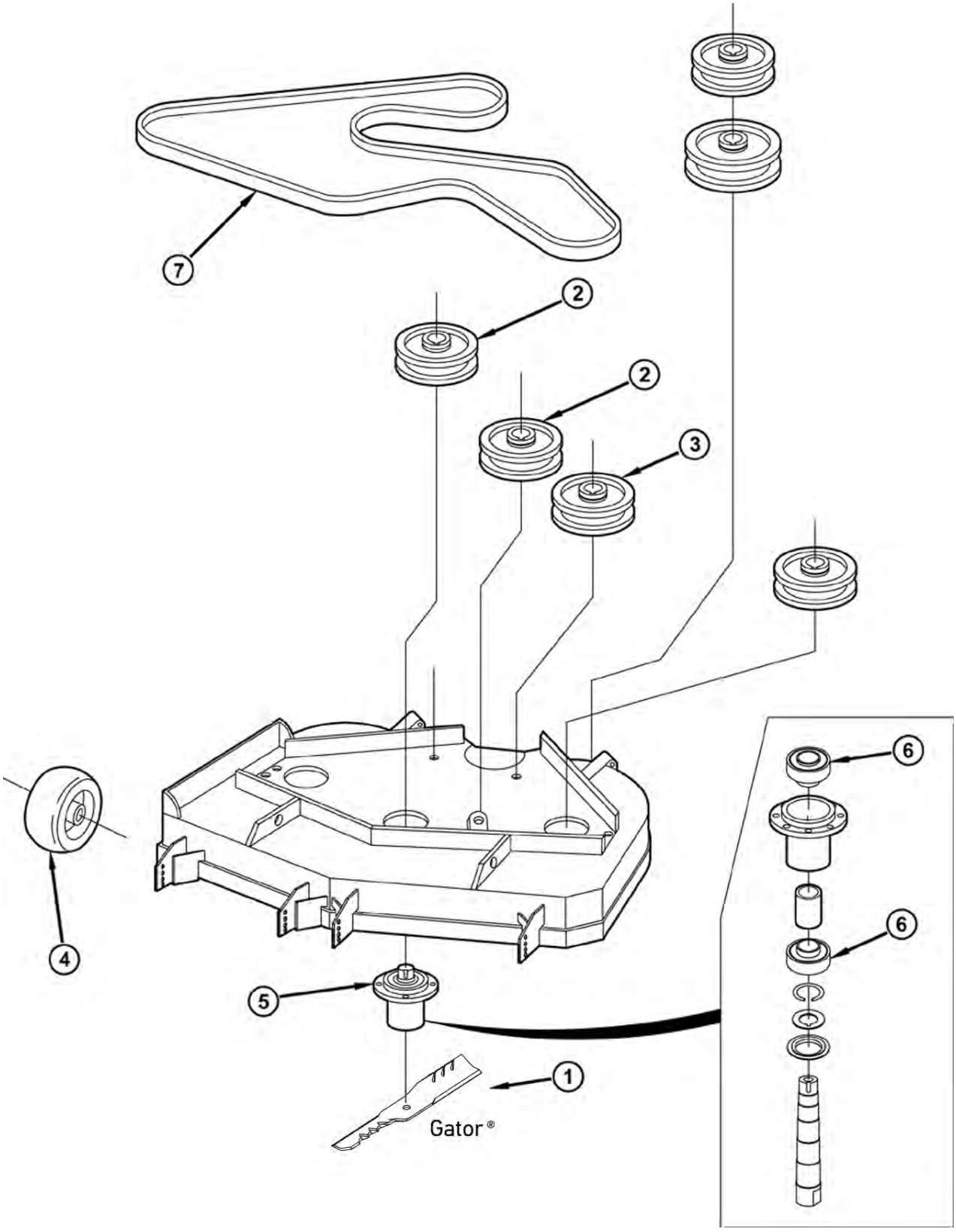

Exmark Lazer Z & Turf Tracer 52", 60", & 72" Deck Mowers

№	Part No.	OEM No.	Description
Blades for 52" Decks with 5/8" Round Center Hole			
	91-312	633482	Standard-Lift, 18"
	91-335	633484	Mulching, 18"
1	96-344		Gator® G3™, 18"
	596-344		Gator G5™, 18"
	396-726		Gator G6®, 18"
Blades for 52" Decks with 15/16" Round Center Hole			
	92-030	103-6402-03	Standard-Lift, 18"
	92-027	103-6392-03	Mulching, 18"
1	96-322		Gator G3, 18"
	596-322		Gator G5, 18"
	396-322		Gator G6, 18"
Blades for 60" Decks with 5/8" Round Center Hole			
	91-378	633483	Low-Lift, 20-1/2"
		103-1580	Bahia Blade, 20-1/2"
	91-264	613112	Standard-Notch Lift, 20-1/2"
	91-506	103-2530	High-Notch Lift, 20-1/2"
1		103-0301-03	Mulching, 20-1/2"
	96-319		Gator G3, 20-1/2"
	596-319		Gator G5, 20-1/2"
	396-740		Gator G6, 20-1/2"
Blades for 60" Decks with 15/16 " Round Center Hole			
	92-025	103-6383	Bahia Blade, 20-1/2"
	92-209		Standard-Notch Lift, 20-1/2"
	92-028	103-6393	Mulching, 20-1/2"
1	92-031	103-6398	High-Notch Lift, 20-1/2"
	96-749		Gator G3, 20-1/2"
	596-749		Gator G5, 20-1/2"
	392-025		Gator G6, 20-1/2"
Blades for 60" Triton Decks with 15/16 " Round Center Hole			
	492-730	103-8396	Notch-Lift, Triton Decks, 20-3/4"
1			Gator G3, Triton Decks, 20-3/4"
	392-201		Gator G6, Triton Decks, 20-3/4"
Blades for 66" Triton Decks with 15/16" Round Center Hole			
1	492-732	109-6464-03	Notch-Lift, Triton Decks, 22-11/16"
	392-203		Gator G6, Triton Deck, 22-11/16"
Blades for 72" Decks with 5/8" Round Center Hole			
1	91-374	1-643006	High-Lift, 24-3/8"
	96-699		Gator G3, 24-3/8"
Blades for 72" Decks with 15/16" Round Center Hole			
	92-057		Standard-Lift, 24-1/2"
1	92-084		Mulching, 24-1/2"
	392-057		Gator G6, 24-1/2"
Blades for 72" Triton Decks with 15/16 " Round Center Hole			
1		109-6465-03	Notch Lift, Triton Decks, 24-5/8"
	392-204		Gator G6, Triton Decks, 24-5/8"
Replacement Parts			
2	78-011	633109	Flat Idler Pulley
3	78-005	603805	V-Idler Pulley
4	72-311-1	603299	Anti-Scalp Wheel
	82-318	634972	Spindle Assembly, Old Style, for 52", 60", & 72"
5	82-344	103-1140	Spindle Assembly, New Style, for 52" & 60"
	82-349	644092	Spindle Assembly, New Style, for 72"
6	45-220	303543	Spindle Bearing
	75-188	633173	Deck Drive Belt, for 52", 60", & 72", 5/8" x 111-1/4"
7	75-960	633366	Deck Belt, for 52", 5/8" x 128-13/16"
	75-186	633127	Deck Belt, for 60", 5/8" x 146-1/8"
	75-967	643052	Deck Belt, for 72", 5/8" x 169-1/2"

Ferris 48", 52", 61", & 72"

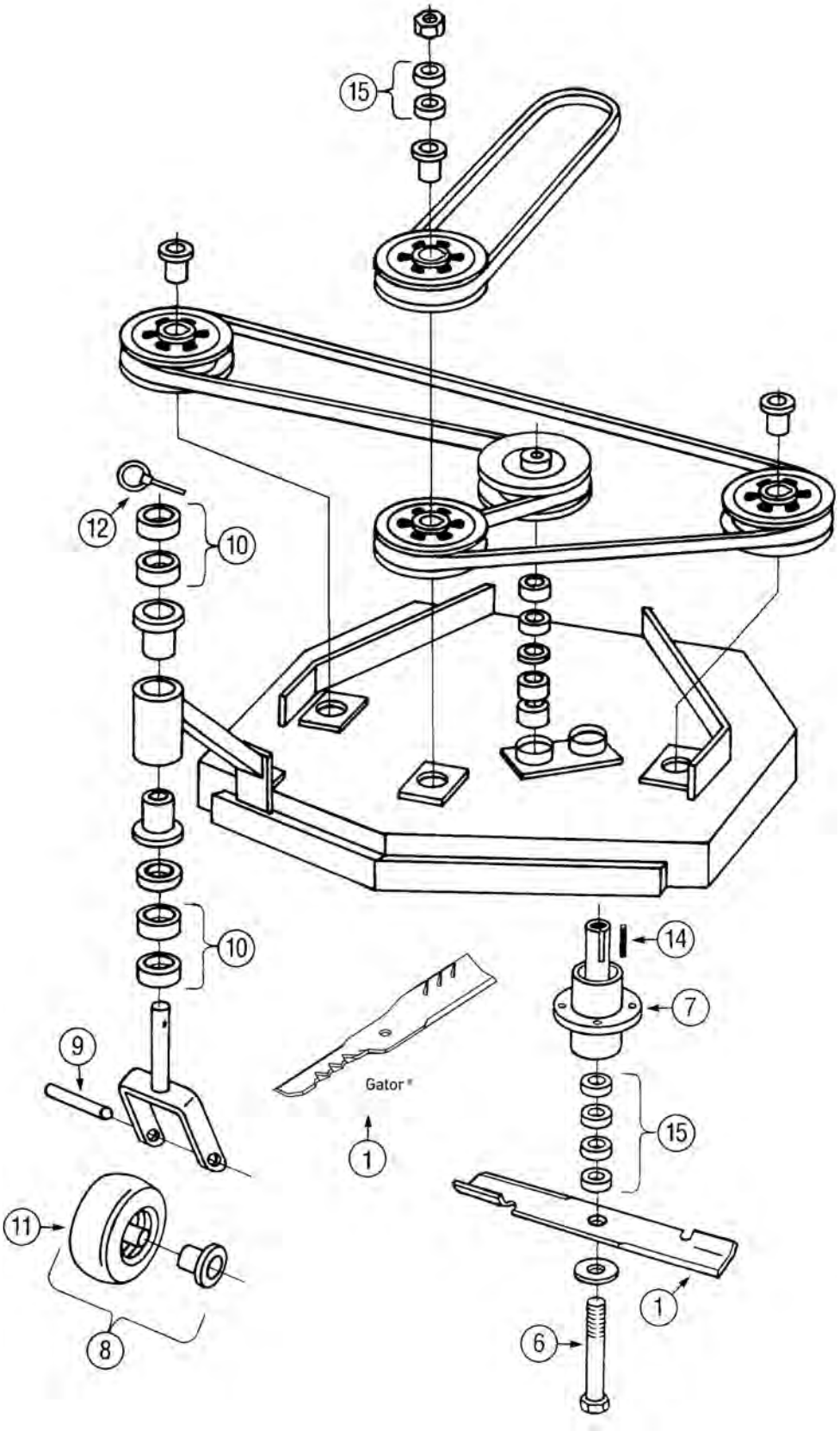

Ferris 48", 52", 61", & 72"

№	Part No.	OEM No.	Description
Blades for 48" Decks with 5/8" Round Center Hole			
1	91-183	520843	Standard-Notch Lift, 16-1/4"
	99-127	520843	High-Lift, **Not for ICD Decks**, 16-1/4"
	91-368		Mulching, 16-1/4"
	96-310		Gator® G3™, 16-1/4"
	596-310		Gator G5™, **Not for ICD Decks**, 16-1/4"
	396-716		Gator G6®, **Not for ICD Decks**, 16-1/4"
Blades for 52" Decks with 5/8" Round Center Hole			
1	91-235	5021227	Standard-Lift, 18"
	91-623	481711	High-Lift, **Not for ICD Decks**, 18"
	96-344		Gator G3, 18"
	596-344		Gator G5, **Not for ICD Decks**, 18"
	396-726		Gator G6, **Not for ICD Decks**, 18"
Blades for 61" Decks with 5/8" Round Center Hole			
1	91-209	520842	Standard-Lift, 21"
	91-628	481711	High-Lift, **Not for ICD Decks**, 21"
	96-347		Gator G3, 21"
	596-347		Gator G5, **Not for ICD Decks**, 21"
	396-727		Gator G6, **Not for ICD Decks**, 21"
Blades for 72" Decks with 5/8" Round Center Hole			
1	91-209	481709	Standard-Lift, 24-1/2"
	96-341		Gator G3, 24-1/2"
	596-341		Gator G5, **Not for ICD Decks**, 24-1/2"
	396-764		Gator G6, **Not for ICD Decks**, 24-1/2"
Replacement Parts			
4	04-125	1525019-76	Blade Bolt
5	82-305	1541480	Spindle Shaft (Not Shown)
7		1530301	Spindle Assembly
8	72-795	1521181	Wheel Assembly
9	45-188	1541657	Spanner
10	09-803	1541476	Spacer, 1/2"
11	58-131		Tire, 9 x 350-4
12	02-446	1520655	Linchpin, 7/16"
13		1520864	Snap Ring
14	80-014	1550407-9	Key, 1/4"
15	09-802	1541477	Spacer, 1/4"

Grasshopper 2000 Series Mid-Mount

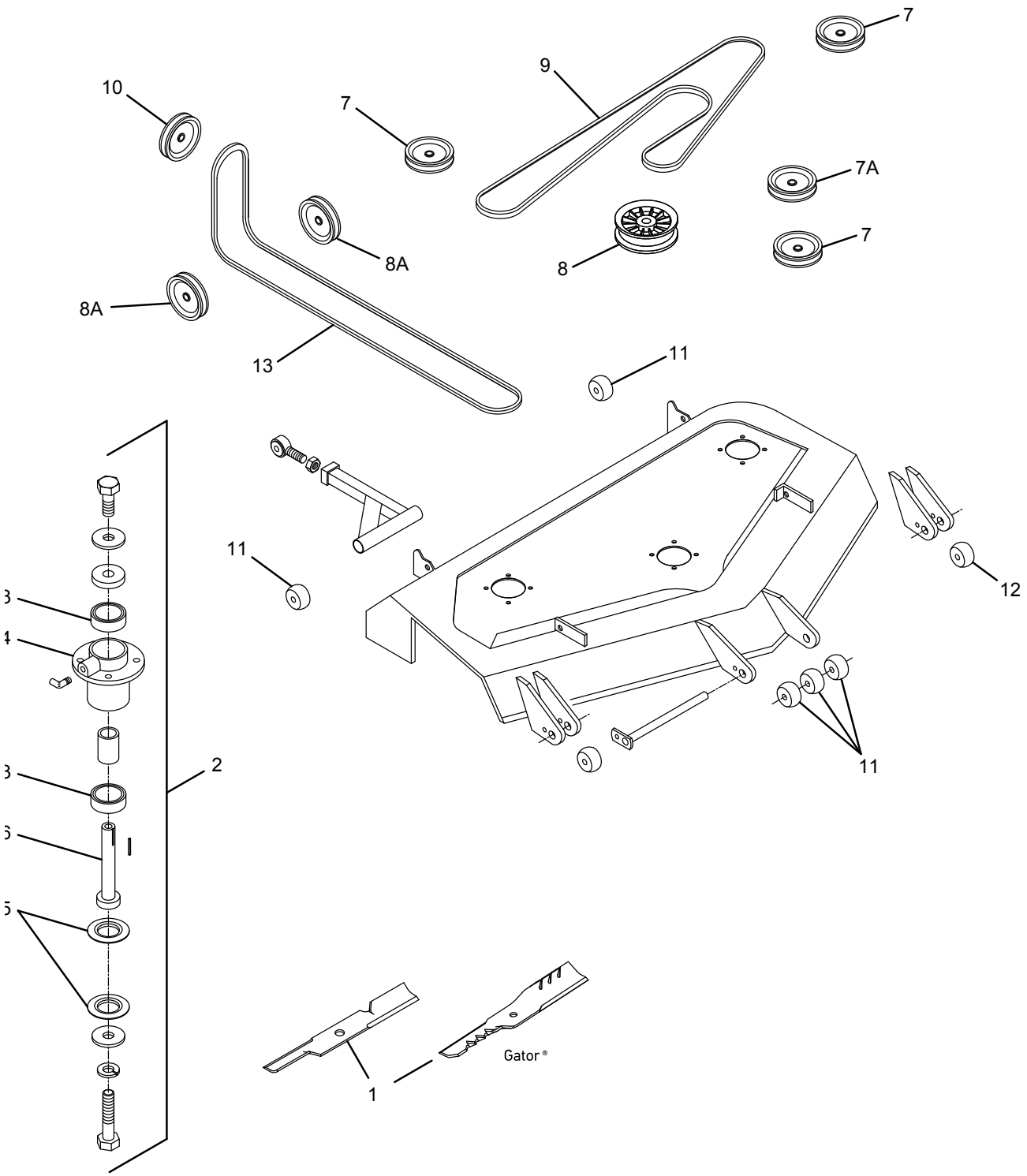

Grasshopper 2000 Series Mid-Mount

№	Part No.	OEM No.	Description
Blades for 52" M152 Decks with 1/2" Round Center Hole			
1	91-538	320240	Low-Lift, 18"
	91-532	320239	High-Lift Notch, 18"
	91-535	320238	Contour Blade, 18"
	96-329		Gator® G3™, 18"
	596-329		Gator G5™, 18"
	396-729		Gator G6®, 18"
Blades for 61" M161 Decks with 1/2" Round Center Hole			
1	91-547	320242	Low-Lift, 21"
	91-531	320245	High-Lift Notch, 21"
	91-537	320246	Extreme High-Lift Notch, 21"
	91-534	320244	Contour Blade, 21"
	96-346		Gator G3, 21"
	596-346		Gator G5, 21"
	396-712		Gator G6, 21"
Blades for 72" M172 Decks with 1/2" Round Center Hole			
1	91-544	320250	Low-Lift, 25"
	91-533	320253	High-Lift Notch, 25"
	91-036	320244	Contour Blade, 25"
	396-778		Gator G6, 25"
Replacement Parts			
2	82-351	623781	Spindle Assembly, Right & Left, M152 & M161
	82-352	623782	Spindle Assembly, Center, M152 & M161
		623786	Spindle Assembly, Right & Left, M172
		623787	Spindle Assembly, Center, M172
3	45-220	110082	Spindle Bearing
4		604421	Spindle Housing, M152 & M161
		824150	Spindle Housing, M172
5	09-006	421200	Fiber Blade Washer
6		604770	Spindle Shaft, Right & Left
		604773	Spindle Shaft, Center
7		415892	Spindle Pulley, M161
		414745	Spindle Pulley, M172
7A		415897	Spindle Pulley, Upper Center, M152 & M161
		415894	Spindle Pulley, Upper Center, M172
8		393250	Idler Deck Belt
8A		393376	Idler PTO Belt
		393390	Idler PTO Belt
9		383082	Deck Belt, M152 Decks
		382085	Deck Belt, M161 Decks
		382098	Deck Belt, M172 Decks
10		388740	PTO Clutch
11	72-133	426122	Deck Wheel
12		484230	Deck Wheel, M152 & M161
		942137	Deck Wheel, M172
13		382085	PTO Belt

Grasshopper 3344 Mid-Mount

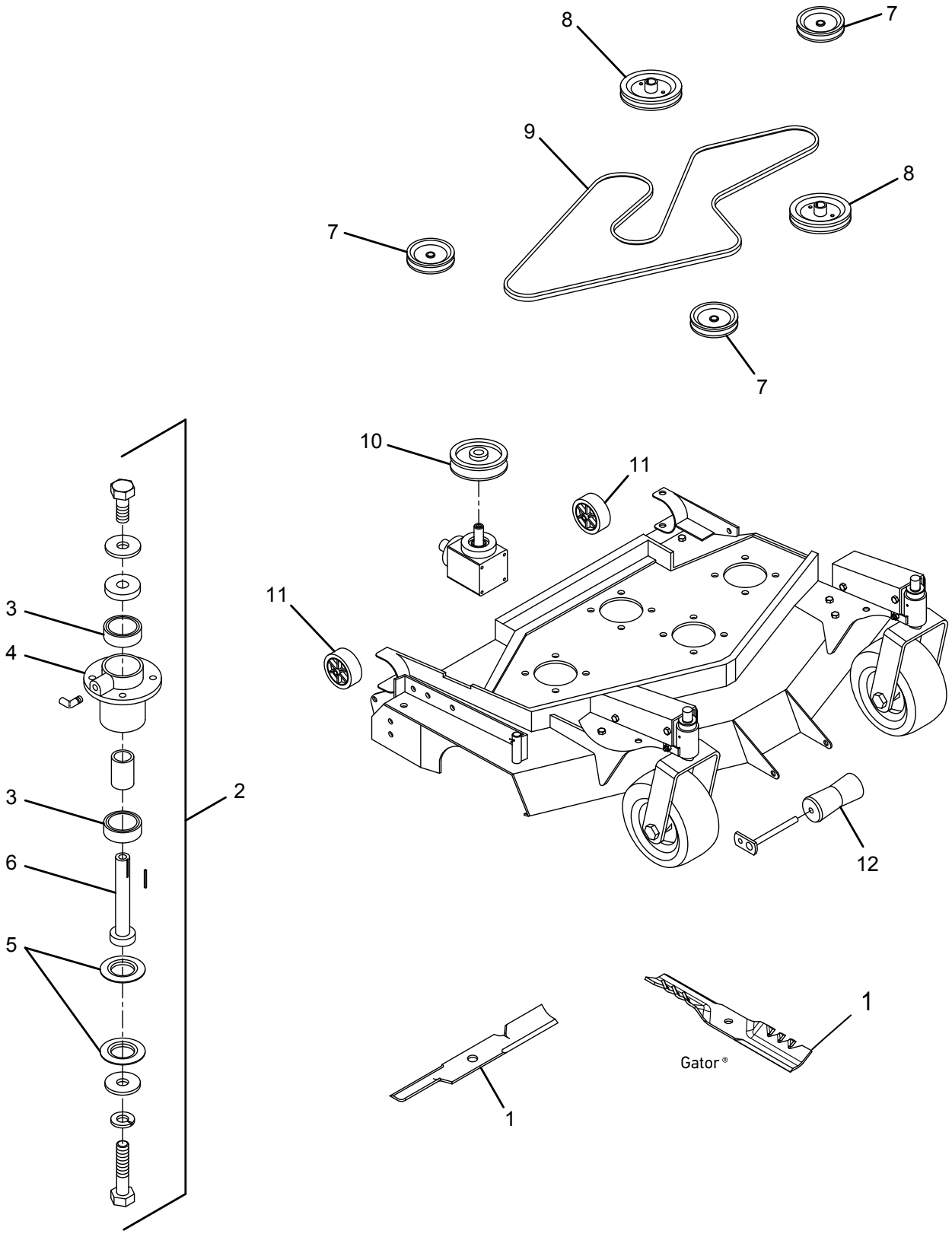

Grasshopper 3344 Mid-Mount

№	Part No.	OEM No.	Description
Blades for 44" Decks with 1/2" Round Center Hole			
1	91-557	320231	Low-Lift, 15"
	91-536	320234	High-Lift Notch, 15"
	96-343		Gator® G3™, 15"
	396-713	320231	Gator G6, 15"
Replacement Parts			
2		623773	Spindle Assembly, Right
		623774	Spindle Assembly, Left & Center
3	45-220	110082	Spindle Bearing
4		320545	Spindle Housing
5	09-006	412200	Fiber Blade Washer
6		604768	Spindle Shaft, Right
6		604764	Spindle Shaft, Left & Center
7		414675	Spindle Pulley
8	78-021	393225	Idler
9		383012	Deck Belt
10		515874	Drive Pulley
11		426122	Deck Wheel
12	72-134	603725	Deck Roller

Grasshopper 2044, 2144, 6044, 6144, 9044, 9144, & 9244 Decks

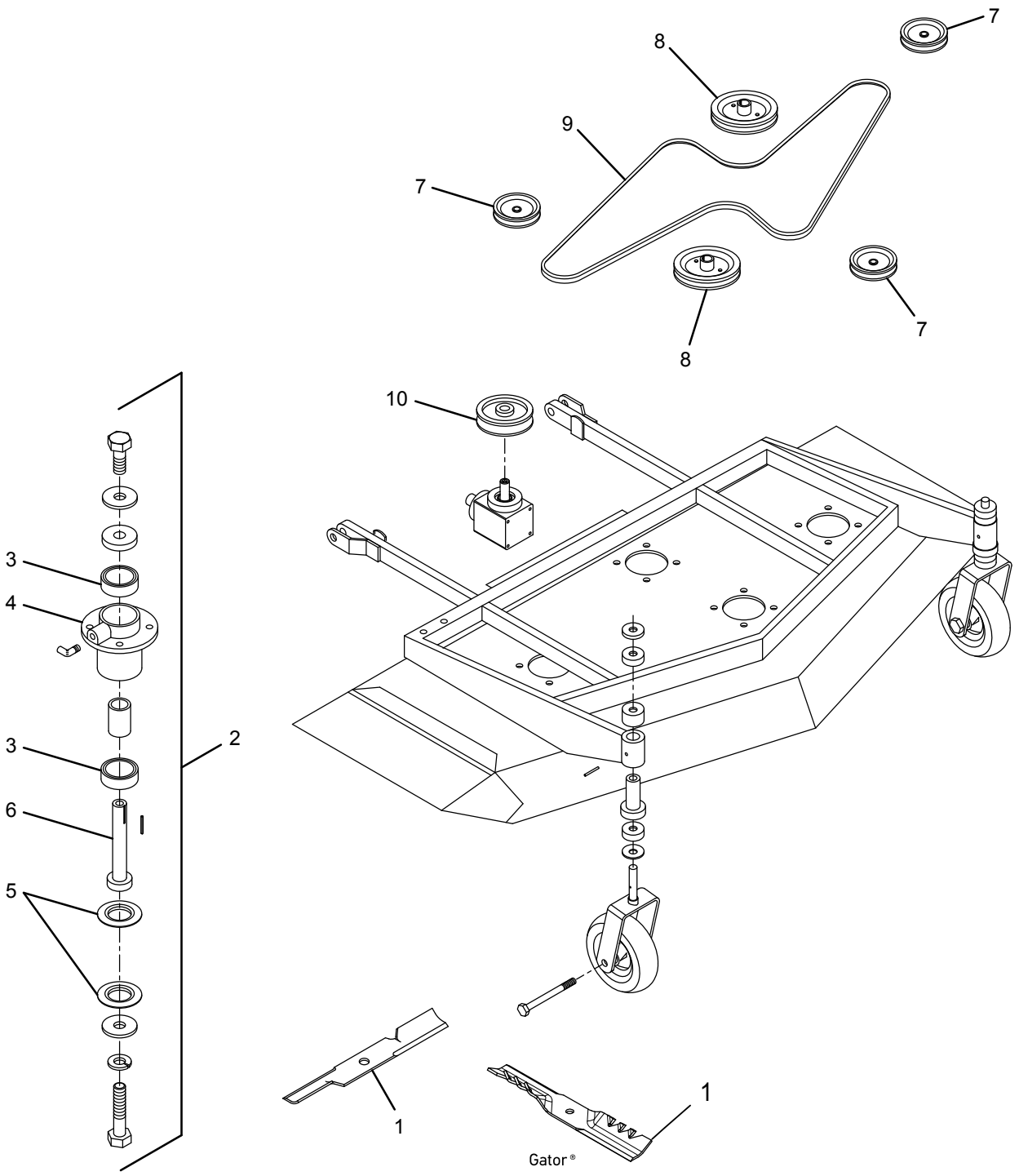

Grasshopper 2044, 2144, 6044, 6144, 9044, 9144, & 9244 Decks

№	Part No.	OEM No.	Description
Blades for 44" Decks with 1/2" Round Center Hole			
1	91-557	320231	Low-Lift, 15"
	91-536	320234	High-Lift Notch, 15"
	96-343		Gator® G3™, 15"
	396-713	320231	Gator G6®, 15"
Replacement Parts			
3	45-225	120081	Spindle Bearing, fits 2044, 2144, 6044, & 6144
	45-220	110082	Spindle Bearing, fits 9044 & 9244
4		320526	Spindle Housing
5	09-006	421200	Fiber Blade Washers
6		603775	Spindle Shaft, fits 2144, 2044, & 6044
		604770	Spindle Shaft, fits 9044 & 9244
		415826	Spindle Pulley, fits 2144, 2044, 6044, & 6144
7		414675	Spindle Pulley, 9044 & 9244
8	78-021	393225	Idler
9		383000	Deck Belt, fits 2144, 2044, 6044, & 6144
		382990	Deck Belt, fits 9044 & 9244
10		415875	Drive Pulley, fits 2144, 2044, 6044, & 6144
		415876	Drive Pulley, fits 9044 & 9244

Grasshopper 9344 & 9544 Decks

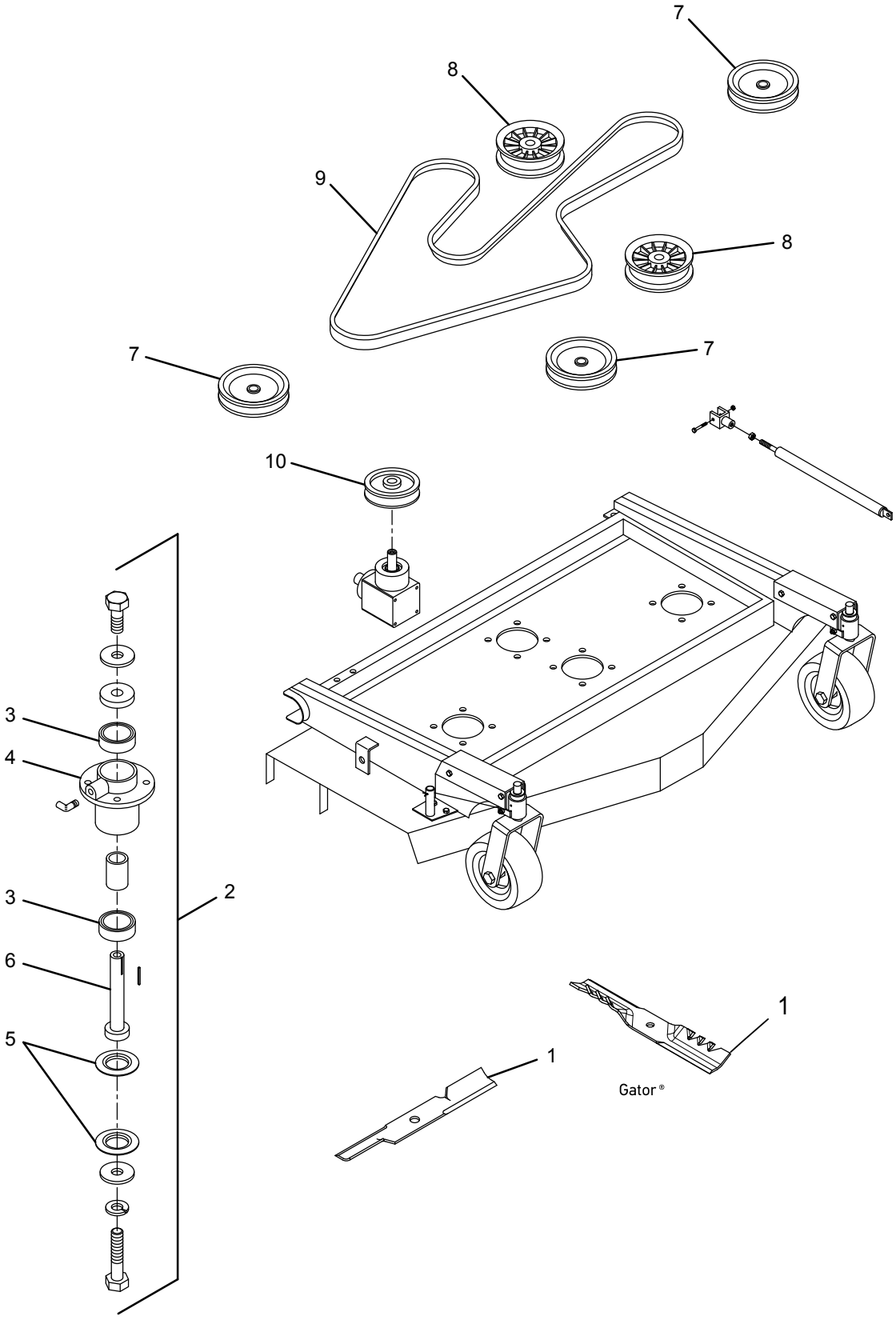

Grasshopper 9344 & 9544 Decks

№	Part No.	OEM No.	Description
Blades for 44" Decks with 1/2" Round Center Hole			
1	91-557	320231	Low-Lift, 15"
	91-536	320234	High-Lift Notch, 15"
	96-343		Gator® G3™, 15"
	396-713	320231	Gator G6®, 15"
Replacement Parts			
4		320526	Spindle Housing
5	09-006	421200	Fiber Blade Washer
6		604770	Spindle Shaft
7		414675	Spindle Pulley
8	78-021	393225	Idler
9		383010	Deck Belt
10		415876	Drive Pulley

Grasshopper 9148, 9348, & 9548 Decks

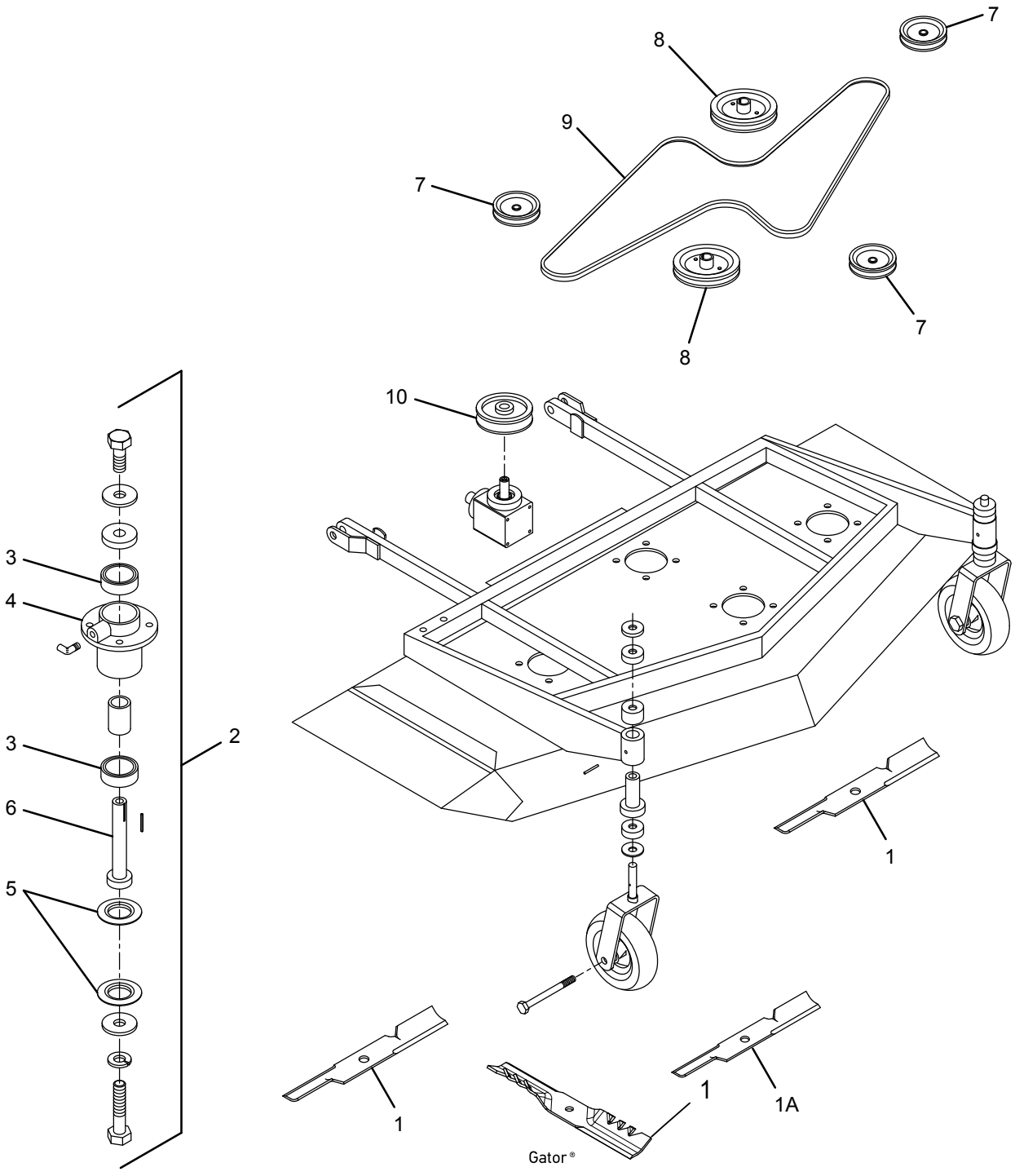

Grasshopper 9148, 9348, & 9548 Decks

Blades for 48" Decks with 1/2" Round Center Hole

№	Part No.	OEM No.	Description
1	91-538	320240	Low-Lift, (Uses 2), 18"
	91-532	320239	High-Lift Notch, (Uses 2), 18"
	91-535	320238	Contour Blade, (Uses 2), 18"
	96-329		Gator® G3,™ (Uses 2), 18"
	596-329		Gator G5™, (Uses 2), 18"
1A	91-557	320231	Low-Lift, (Uses 1), 15"
	91-536	320234	High-Lift Notch, (Uses 1), 15"
	96-343		Gator G3, (Uses 1), 15"
	396-713	320231	Gator G6®, 15"

Replacement Parts

4		320526	Spindle Housing
5	09-006	421200	Fiber Blade Washer
6		604770	Spindle Shaft Right
7		414696	Spindle Pulley
8	78-021	393225	Idler
9		383008	Deck Belt
10		415886	Drive Pulley

Grasshopper 9352 Deck

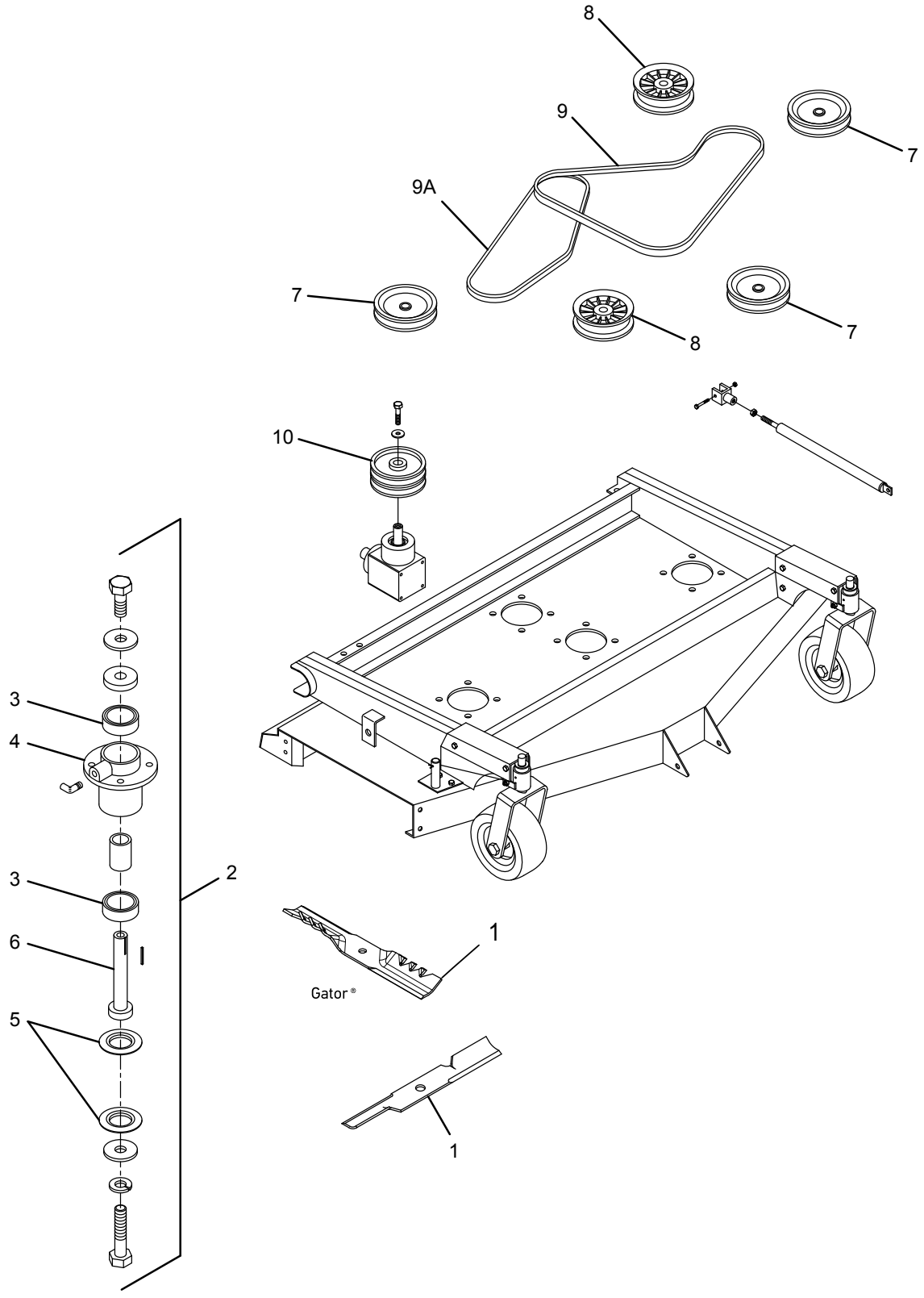

Grasshopper 9352 Deck

№	Part No.	OEM No.	Description
Blades for 52" Decks with 1/2" Round Center Hole			
1	91-538	320240	Low-Lift, 18"
	91-532	320239	High-Lift Notch, 18"
	91-535	320238	Contour Blade, 18"
	96-329		Gator® G3™, 18"
	596-329		Gator G5™, 18"
	396-729		Gator G6®, 18"
Replacement Parts			
2		623784	Spindle Assembly
3	45-220	110082	Spindle Bearing
4		320526	Spindle Housing
5	09-006	421200	Fiber Blade Washer
6		604770	Spindle Shaft
7		414686	Spindle Pulley, fits 9352
8	78-021	393225	Idler
9		382037	Deck Belt, Left
9A		382800	Deck Belt, Right
10		416116	Drive Pulley, Double V

Grasshopper 9061 Deck

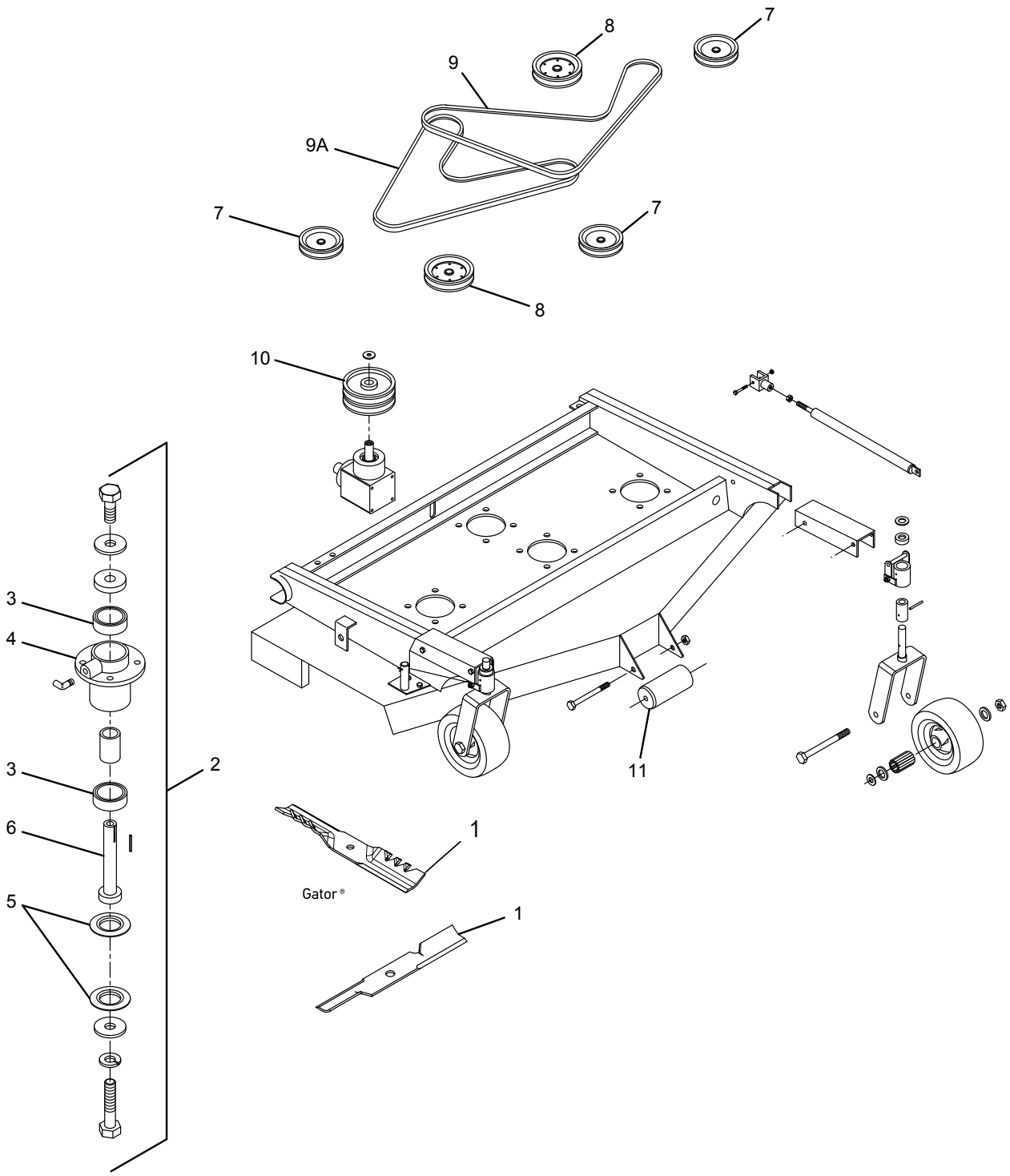

Grasshopper 9061 Deck

№	Part No.	OEM No.	Description
Blades for 61" Decks with 1/2" Round Center Hole			
	91-547	320242	Low-Lift, 21"
	91-531	320245	High-Lift Notch, 21"
	91-537	320246	Extreme High-Lift Notch, 21"
1	91-534	320244	Contour Blade, 21"
	96-346		Gator® G3™, 21"
	596-346		Gator G5™, 21"
	396-712		Gator G6®, 21"
Replacement Parts			
2		623785	Spindle Assembly
3	45-225	120081	Spindle Bearing
4		604770	Spindle Housing
5	09-006	421200	Fiber Blade Washer
6		603775	Spindle Shaft
7		415876	Drive Pulley
8	78-021	393225	Idler
9		382049	Deck Belt, Left
9A		382049	Deck Belt, Right
10		416116	Drive Pulley, Double V
11		426136	Deck Roller

Grasshopper 9561 Deck

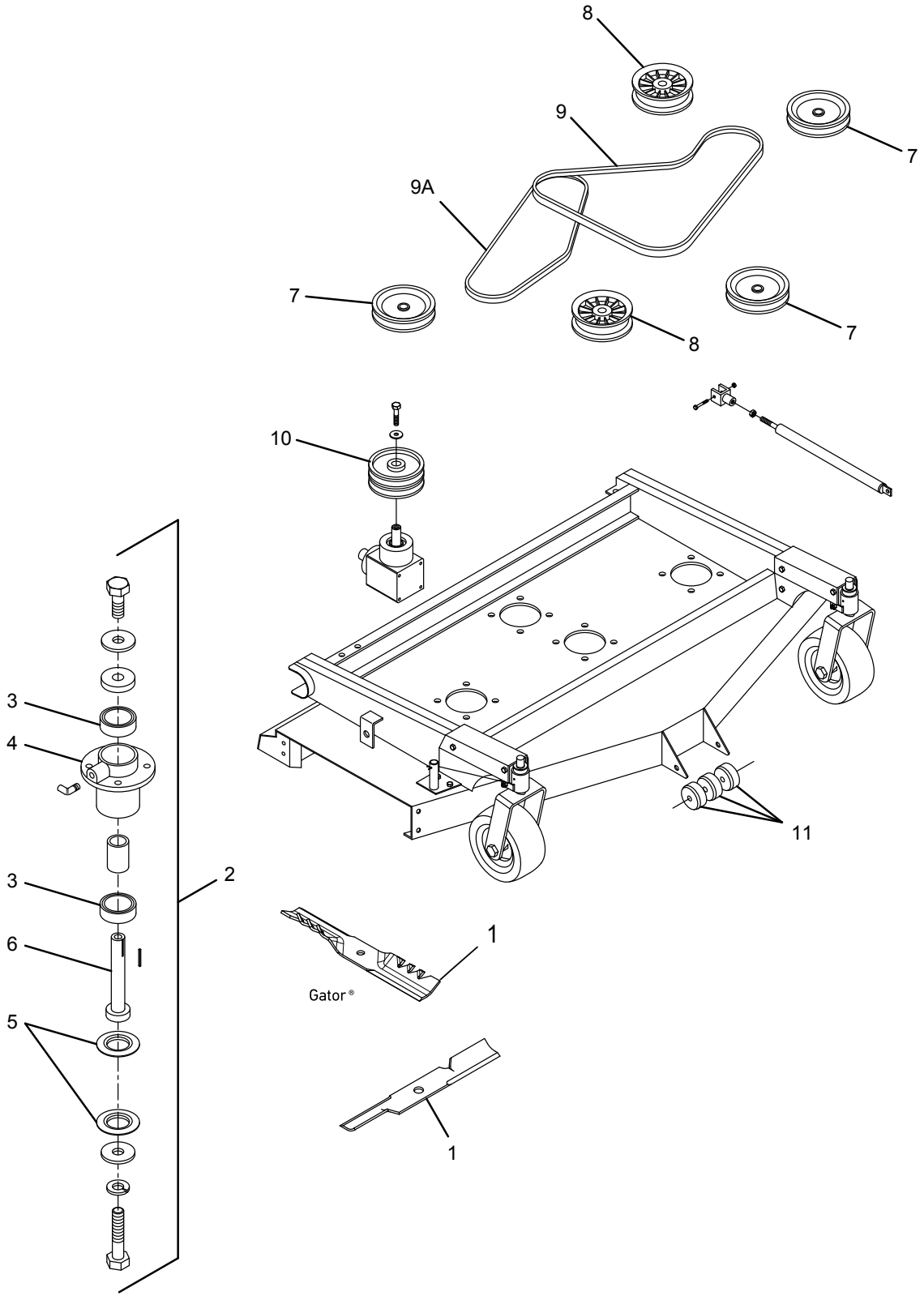

Grasshopper 9561 Deck

№	Part No.	OEM No.	Description
Blades for 61" Decks with 1/2" Round Center Hole			
1	91-547	320242	Low-Lift, 21"
	91-531	320245	High-Lift Notch, 21"
	91-537	320246	Extreme High-Lift Notch, 21
	91-534	320244	Contour Blade, 21"
	96-346		Gator® G3™, 21"
	596-346		Gator G5™, 21"
	396-712		Gator G6®, 21"
Replacement Parts			
2		623784	Spindle Assembly, Right
		623783	Spindle Assembly, Center & Left
3	45-220	110082	Spindle Bearing
4		320526	Spindle Housing
5	09-006	421200	Fiber Blade Washer
6		604770	Spindle Shaft, Right
		604768	Spindle Shaft, Center & Left
7		415867	Spindle Pulley, (2000)
8	78-021	393225	Idler
9		382865	Deck Belt, Left
9A		382025	Deck Belt, Right
10		416116	Drive Pulley, Double V
11	72-133	426122	Deck Wheel

Hustler Parts

Parts for Hustler FasTrak,
44" & 52" Deck Mowers

Mini Z & Super Mini Z
44" & 52" Deck Mowers

Super Z
52", 60", & 72" Deck Mowers

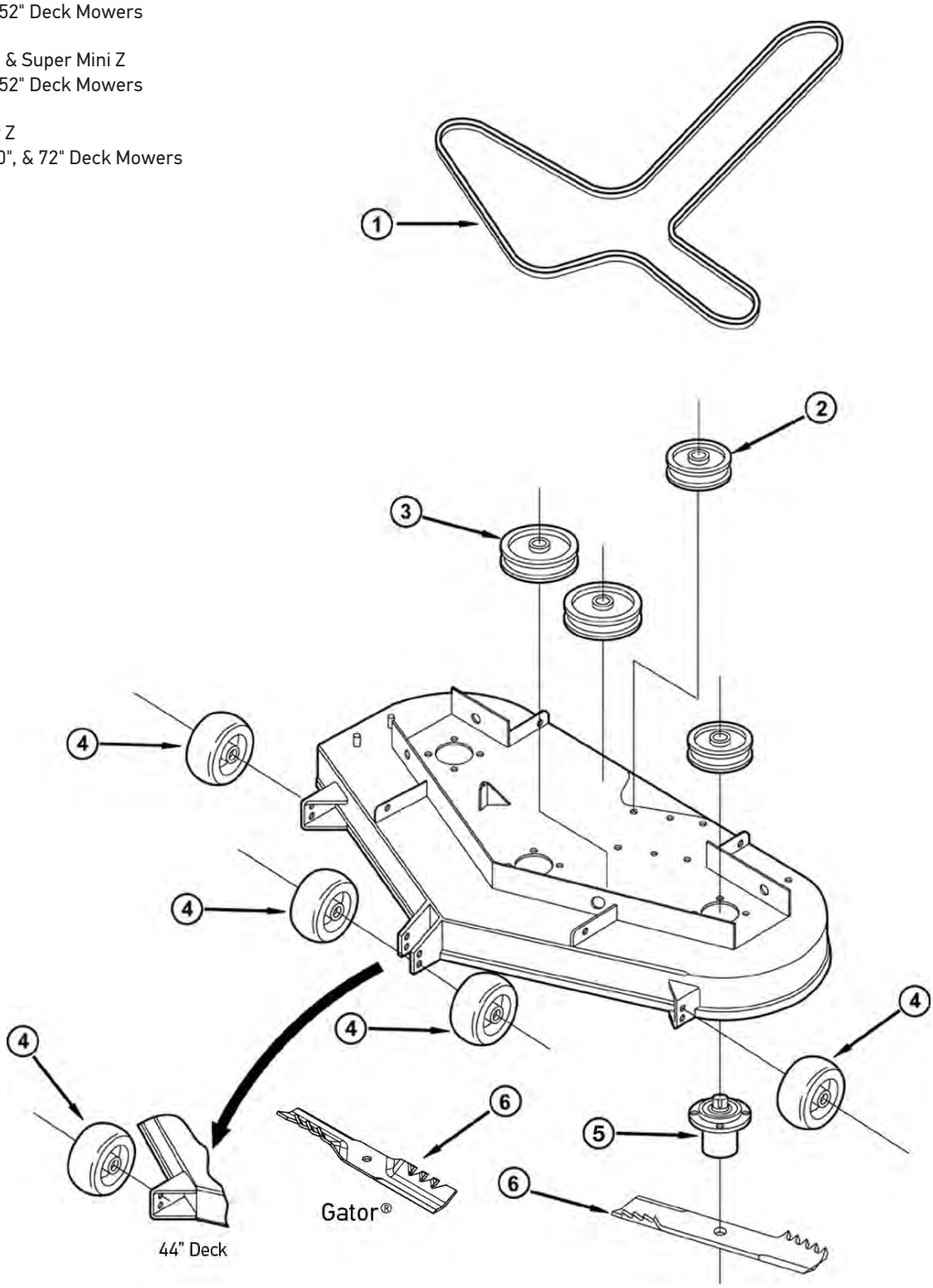

Hustler Parts

№	Part No.	OEM No.	Description
Hustler FasTrak			
	75-756	791335	Deck Belt, 5/8" x 143-1/4"
1	75-757	793828	Deck Belt, 1/2" x 116-5/16"
	75-759	793893	Deck Belt, 5/8" x 127-1/2"
2	78-026	784504	Flat Idler Pulley, 44" & 52"
3	78-026	784504	Flat Idler Pulley, 44" & 52"
4	72-311-1	31997	Anti-Scalp Wheel, 44" & 52"
5	82-021	350595	Spindle Assembly
	90-205	784256	Replacement Blade, 44"
6	96-302		Gator® G3™, Hi-Lift Blades, 44" Decks
	90-206	783753	Replacement Blade, 52"
Mini Z & Super Mini Z			
		786483	Deck Belt, 52"
1	75-755	789388	Deck Belt, 5/8" x 151-1/8"
	75-756	791335	Deck Belt, 5/8" x 143-1/4"
2	78-022	781856	Flat Idler Pulley, 44" & 52"
3	78-023	781385	Flat Idler Pulley, 44" & 52"
4	72-311-1	31997	Anti-Scalp Wheel, 44" & 52"
5	82-021	350595	Spindle Assembly
	90-205	784256	Replacement Blade, 44"
6	96-302		Gator G3, Hi-Lift Blades, 44" Decks
	90-206	783753	Replacement Blade, 52"
	396-704		Gator G6®, 52" Decks
Super Z			
	75-664	782292	Deck Belt, 52"
1	75-662	781310	Deck Belt, 60"
	75-665	784207	Deck Belt, 72"
2	78-022	781856	Flat Idler Pulley, 44" & 52"
3	78-023	781385	Flat Idler Pulley, 44" & 52"
4	72-311-1	31997	Anti-Scalp Wheel, 52", 60", & 72"
5	82-021	350595	Spindle Assembly, 52", 60", & 72"
	90-207	781898	Replacement Blade, 52"
	90-208	782516	Replacement Blade, 60"
6	396-703		Gator G6, 60" Decks
		783977	Replacement Blade, 72"
	396-726		Gator G6, 72" Decks

Scag Freedom — Z48-52 Deck Mower

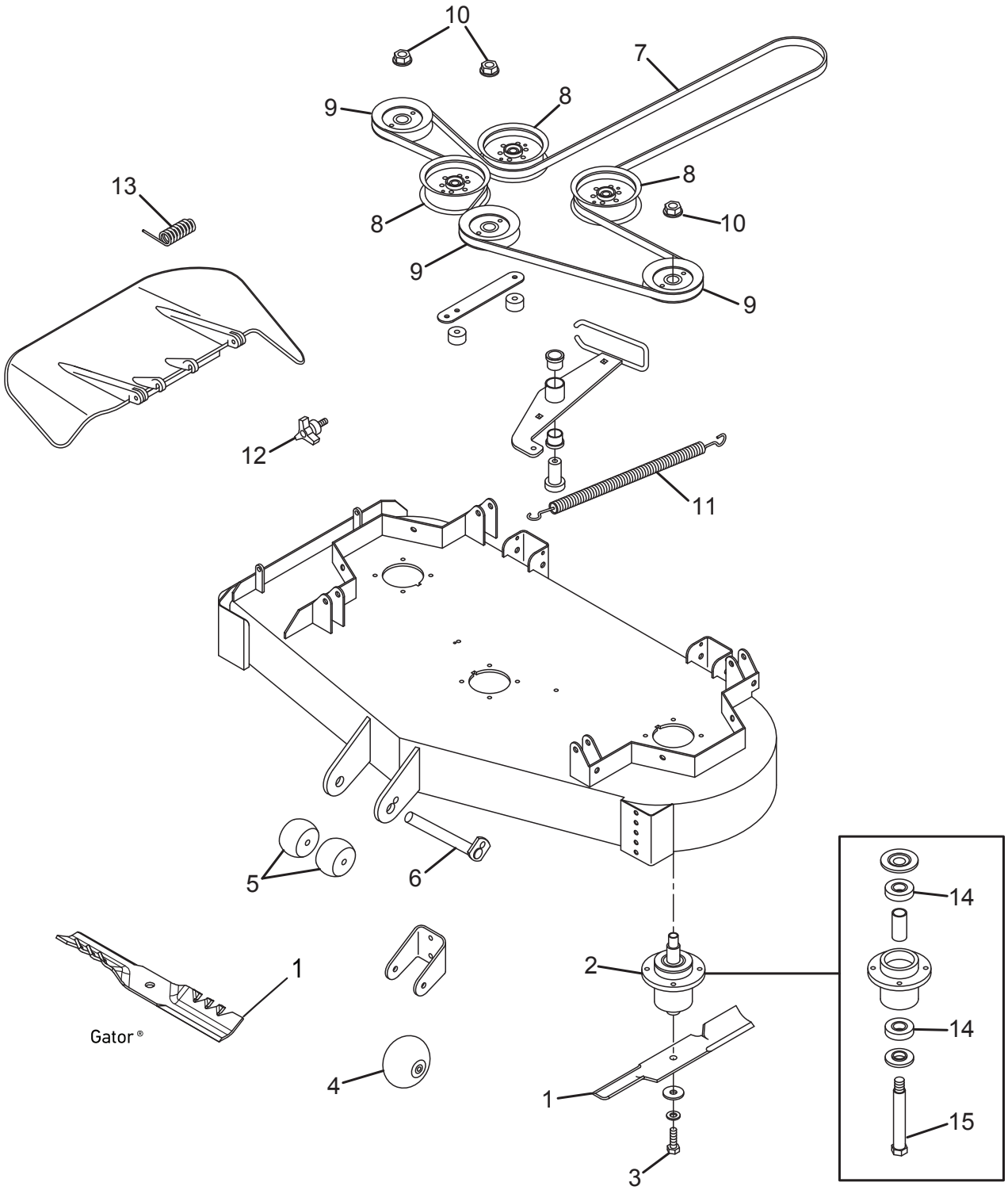

Scag Freedom — Z48-52 Deck Mower

№	Part No.	OEM No.	Description
Blades for 48" Decks with 5/8 " Round Center Hole			
1	91-620	481706	Standard-Notch Lift, 16-1/2"
	92-145	482877	High-Notch Lift, 16-1/2"
	91-621	481710	Extreme High-Notch Lift, 16-1/2"
	96-344		Gator® G3™, 16-1/2"
	396-726		Gator G6®, 16-1/2"
Blades for 52" Decks with 5/8 " Round Center Hole			
1	91-622	481707	Standard-Notch Lift, 18"
	91-637	482878	High-Notch Lift, 18"
	91-623	481711	Extreme High-Notch Lift, 18"
	96-344		Gator G3, 18"
	596-344		Gator G5™, 18"
	396-726		Gator G6, 18"
Replacement Parts			
2		461950	Spindle Assembly
3		04001-121	Blade Bolt, 5/8-11" x 1-1/2"
4	72-758	481632	Deck Wheel
5		482295	Deck Wheel
6		451926	Shaft
7	75-648	483325	Deck Belt, for 48", 5/8" x 140-3/4"
	75-649	483326	Deck Belt, for 52", 5/8" x 148-1/4"
8		483422	Idler Pulley, 5-3/4" x 1-3/4" x 3/8"
9		483323	Spindle Pulley, for 48" Deck, ID: 5" x 25 mm
		483324	Spindle Pulley, for 52" Deck, ID: 5-3/4" x 25 mm
10		04112-06	Nut, Spiral Lock, 3/4-16"
11		483375	Spring, Idler
12		481625-01	Wing Nut
13		482245	Spring, Deflector
14		483303	Bearing
15		43695	Spindle Shaft

Scag Sabretooth Turf Tigers 52", 61", & 72" Deck Mower

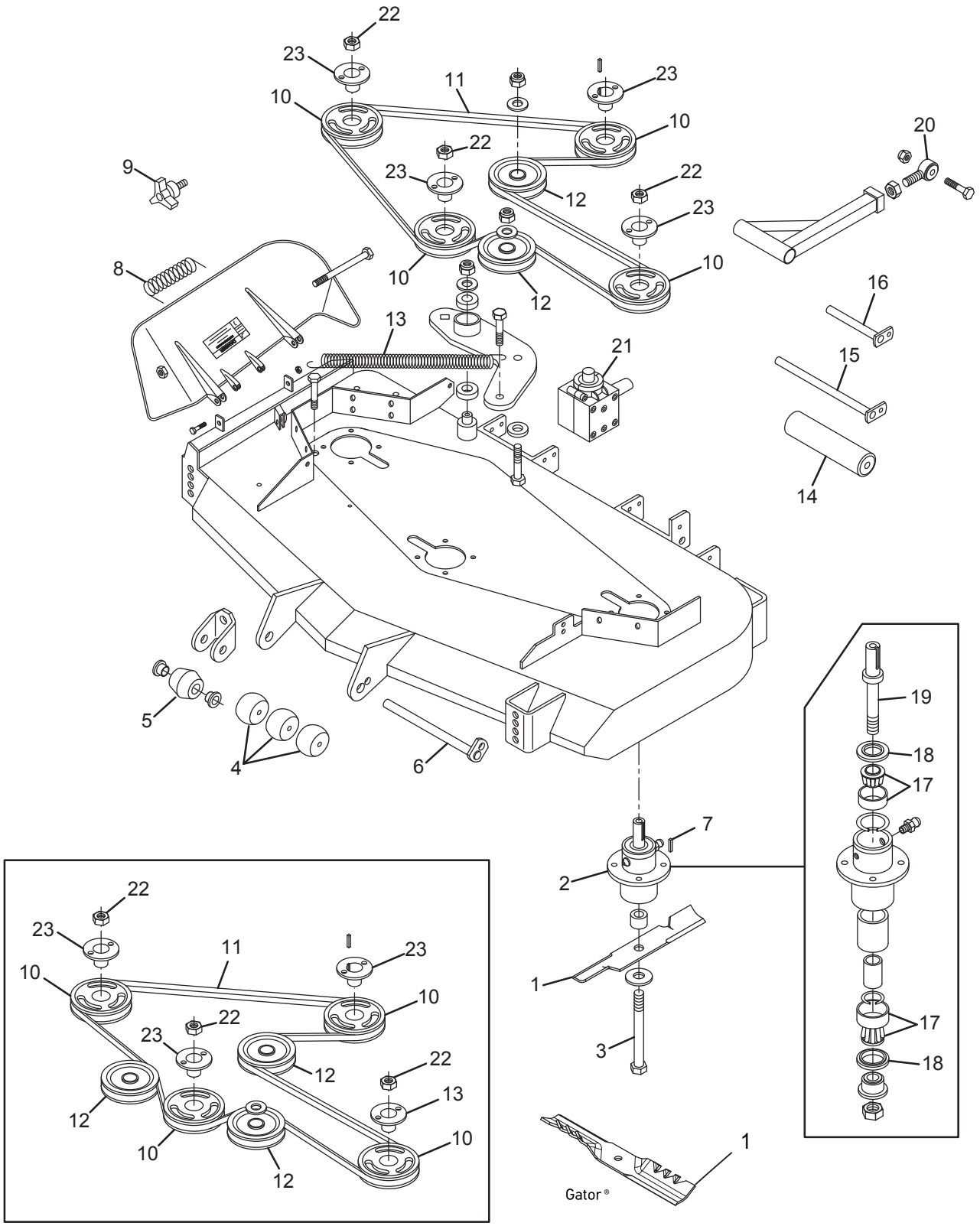

Scag Sabretooth Turf Tigers 52", 61", & 72" Deck Mower

№	Part No.	OEM No.	Description
Blades for 52" Decks with 5/8" Round Center Hole			
1	91-622	481707	Standard-Notch Lift, 18"
	91-637	482878	High-Notch Lift, 18"
	91-623	481711	Extreme High-Notch Lift, 18"
	96-344		Gator® G3™, 18"
	596-344		Gator G5™, 18"
	396-726		Gator G6®, 18"
Blades for 61" Decks with 5/8" Round Center Hole			
1	91-638	482879	Standard-Notch Lift, 21"
	91-626	481708	High-Notch Lift, 21"
	91-628	481712	Extreme High-Notch Lift, 21"
	96-347		Gator G3, 21"
	596-347		Gator G5, 21"
	396-727		Gator G6, 21"
Blades for 72" Decks with 5/8" Round Center Hole			
1	91-627	481709	Standard-Notch Lift, 24-1/2"
	92-035	482882	High-Notch Lift, 24-1/2"
	96-341		Gator G3, 24-1/2"
	596-341		Gator G5, 24-1/2"
	396-764		Gator G6, 24-1/2"
Replacement Parts			
2	82-325	46631	Spindle Assembly, (2004 & Earlier)
		461663	Spindle Assembly, (2004 & Later)
3	04-125	04001-41	Blade Bolt, fits 46631 Spindle, 5/8-11 x 9-1/2"
4		482295	Deck Wheel
5	72-758	481362	Deck Wheel
6		45944	Shaft
7		04063-08	Key, 1/4" x 2"
8		482245	Spring, Deflector
9		481625-01	Wing Nut, 3/8-16"
10		48753	Spindle Pulley, for 61" Deck, 6-11/32 OD
		48967	Spindle Pulley, for 72" Deck, 6-15/16 OD
11	75-270	481557	Deck Belt, for 52", 5/8" x 123"
	75-681	482281	Deck Belt, for 52", Later Models, 5/8" x 121-1/8"
	75-216	481558	Deck Belt, for 61" Deck, 5/8" x 139-1/4"
		481980	Deck Belt, for 72" Deck
12		482416	Idler Pulley
		483215	Idler Pulley, 5-7/8" x 1-3/4" x 3/8"
13	78-300	48269	Idler Pulley
14		481597	Spring, Idler
15		48038	Deck Roller
16		45944	Roller Shaft
17		451240	Shaft
18	45-002	481022	Bearing & Race
	49-314	481024	Seal Top
		481025	Seal Bottom
19		45389	Spindle Shaft, for 46631 Spindle
20		48763	Turnbuckle Eyelet, 5/8" RH Male Thread
21		482486	Gear Box
22		04020-09	Nut, 5/8"-11 UNC
23	78-003	48926	Pulley Collar, 1-1/8" Bore

Scag Super Z 48", 52", & 61" Deck Mower

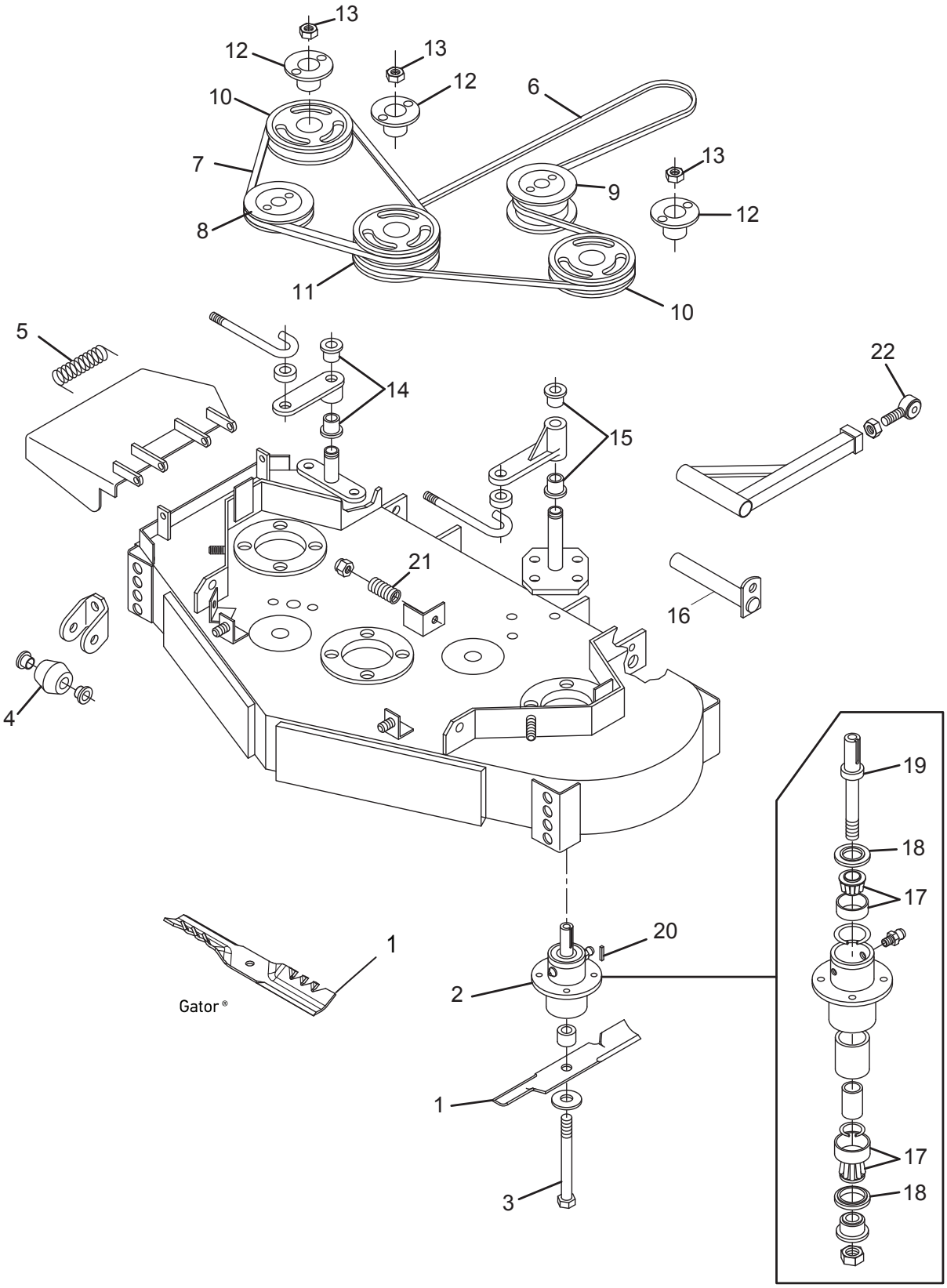

Scag Super Z 48", 52", & 61" Deck Mower

№	Part No.	OEM No.	Description
Blades for 48" Decks with 5/8" Round Center Hole			
1	91-620	481706	Standard-Notch Lift, 16-1/2"
	92-145	482877	High-Notch Lift, 16-1/2"
	91-621	481710	Extreme High-Notch Lift, 16-1/2"
	96-344		Gator® G3™, 16-1/2"
	396-726		Gator G6®, 16-1/2"
Blades for 52" Decks with 5/8" Round Center Hole			
1	91-622	481707	Standard-Notch Lift 18"
	91-637	482878	High-Notch Lift, 18"
	91-623	481711	Extreme High-Notch Lift, 18"
	96-344		Gator® G3™, 18"
	596-344		Gator G5™, 18"
	396-726		Gator G6®, 18"
Blades for 61" Decks with 5/8" Round Center Hole			
1	91-638	482879	Standard-Notch Lift, 21"
	91-626	481708	High-Notch Lift, 21"
	91-628	481712	Extreme High-Notch Lift, 21"
	96-347		Gator G3, 21"
	596-347		Gator G5, 21"
	396-727		Gator G6, 21"
Replacement Parts			
2	82-325	46631	Spindle Assembly
3	04-125	04001-41	Blade Bolt, 5/8-11 x 9-1/2"
4	72-758	481362	Deck Wheel
5		481050	Spring, Deflector
6	75-904	48799	Deck Drive Belt, for 48" Deck, 5/8" x 115"
		481001	Deck Drive Belt, for 52" Cut
	75-370	48996	Deck Drive Belt, for 61" Cut, 5/8" x 135-1/2"
7	75-154	48087	Spindle Belt, for 48" Deck, 5/8" x 53-3/8"
	75-048	48285	Spindle Belt, for 52" Deck, 5/8" x 56-1/8"
	75-047	48265	Spindle Belt, for 61" Cut, 5/8" x 63-1/8"
8	78-121	48181	Idler Pulley
9		48550	Idler Pulley
10		48294	Spindle Pulley, for LH 48" & 52" Cut
		48753	Spindle Pulley, for LH 61" Cut
		48294	Spindle Pulley, for RH
11		48923	Spindle Pulley, Double, for 48" & 52" Cut
		48940	Spindle Pulley, Double, for 61" Cut
12	78-003	48926	Pulley Collar, 1-1/8" Bore
13		04020-09	Nut, 5/8"-11 UNC
14		48100-05	Bushing
15	48-320	48100-02	Bushing
16		45332	Shaft
17	45-002	481022	Bearing & Race
18	49-314	481024	Seal, Top
		481025	Seal, Bottom
19		43298	Spindle Shaft
20		04063-08	Key, 1/4" x 2"
21		48807	Spring
22		48763	Turnbuckle Eyelet, 5/8" RH Male Thread

Scag Tiger Cub 48A, 52A Deck Mower

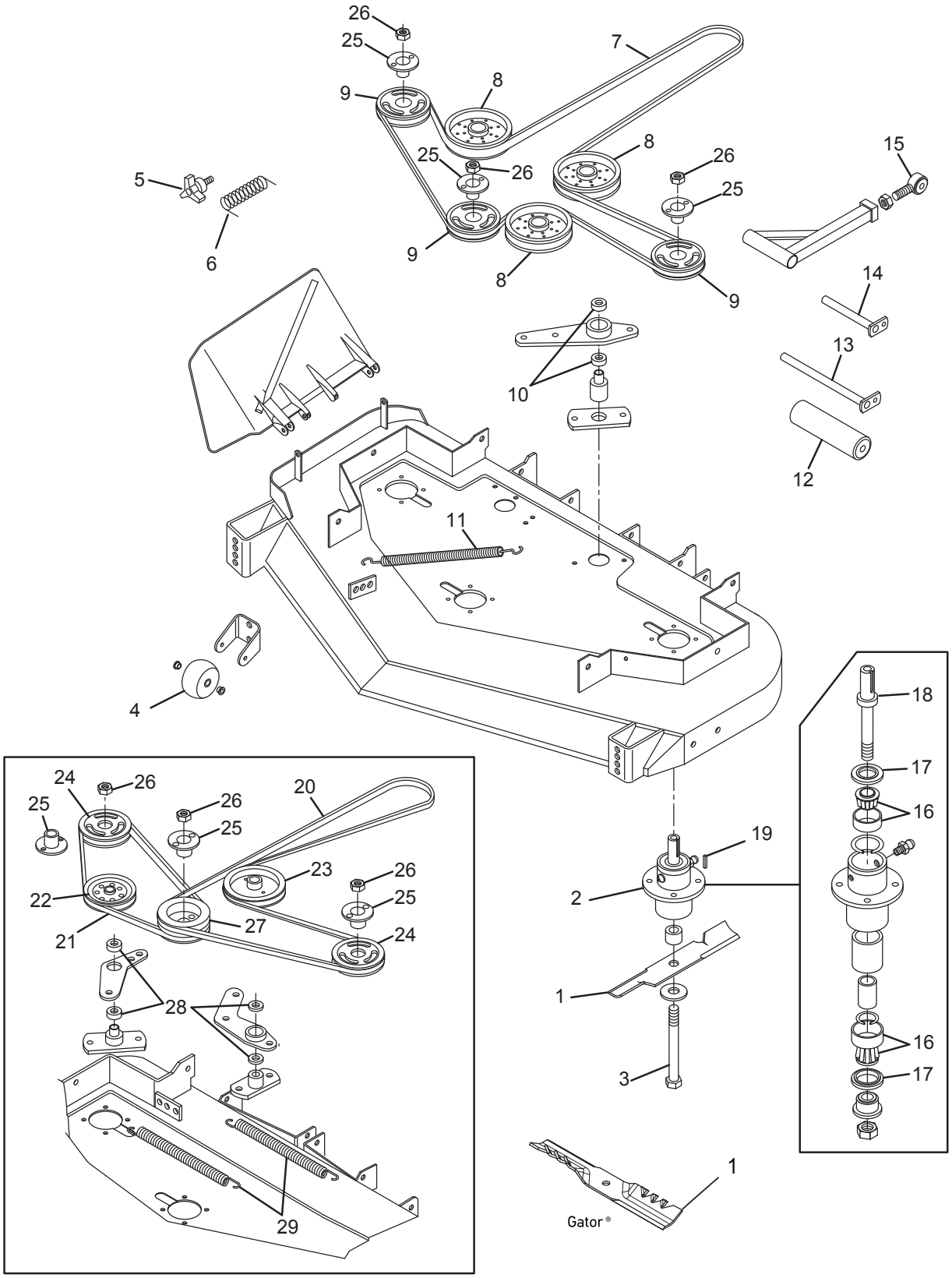

Scag Tiger Cub 48A, 52A Deck Mower

№	Part No.	OEM No.	Description
Blades for 48" Decks with 5/8" Round Center Hole			
1	91-620	481706	Standard-Notch Lift, 16-1/2"
	92-145	482877	High-Notch Lift, 16-1/2"
	91-621	481710	Extreme High-Notch Lift, 16-1/2"
	96-344		Gator® G3™, 16-1/2"
	396-726		Gator G6®, 16-1/2"
Blades for 52" Decks with 5/8" Round Center Hole			
1	91-622	481707	Standard-Notch Lift, 18"
	91-637	482878	High-Notch Lift, 18"
	91-623	481711	Extreme High-Notch Lift, 18"
	96-344		Gator G3, 18"
	596-344		Gator G5™, 18"
	396-726		Gator G6, 18"
Replacement Parts			
2	82-325	46631	Spindle Assembly
3	04-125	04001-41	Blade Bolt, 5/8-11 x 9-1/2"
4	72-758	481632	Deck Wheel
5		491625-01	Wing Nut, 3/8-16
6		482245	Spring, Deflector
7	75-682	482529	Deck Belt, for 48" Deck, 5/8" x 147-7/8"
	75-629	482530	Deck Belt, for 52" Cut, 5/8" x 155"
8		482416	Idler Pulley, OD: 5"
9		482148	Spindle Pulley, for 48" Cut, OD: 4-3/4"
		481435	Spindle Pulley, for 52" Cut, OD: 5-3/8"
10	45-242	48224	Bearing
11		482718	Spring, Idler
12		48038	Deck Roller
13		45944	Shaft
14		451240	Shaft
15		48763	Turnbuckle Eyelet, 5/8" RH Male Thread
16	45-002	481022	Bearing & Race
17	49-314	481024	Seal, Upper
		481025	Seal, Lower
18		43298	Spindle Shaft
19		04063-08	Key, 1/4" x 2"
20		482137	Deck Drive Belt
	75-681	482281	Deck Drive Belt, 5/8" x 121-1/8"
21		482138	Spindle Belt
		482140	Spindle Belt
22	34-107	482217	V-Idler Pulley, 5-3/4" x 3/4" x 3/8"
23		481962	Idler Pulley, OD; 5"
24		482148	Spindle Pulley, for 48" Cut, OD: 4-3/4"
		481435	Spindle Pulley, for 52" Cut, OD: 5-3/8"
25	78-003	48926	Pulley Collar, Bore: 1-1/8"
26		04020-09	Nut, 5/8-11 UNC
27		482149	Spindle Pulley, Double, for 48" Cut, OD: 4-3/4"
		482150	Spindle Pulley, Double, for 52" Cut, OD: 5-3/8"
28	45-242	48224	Bearing

Scag Tiger Cub 48V & 52V Deck Mower

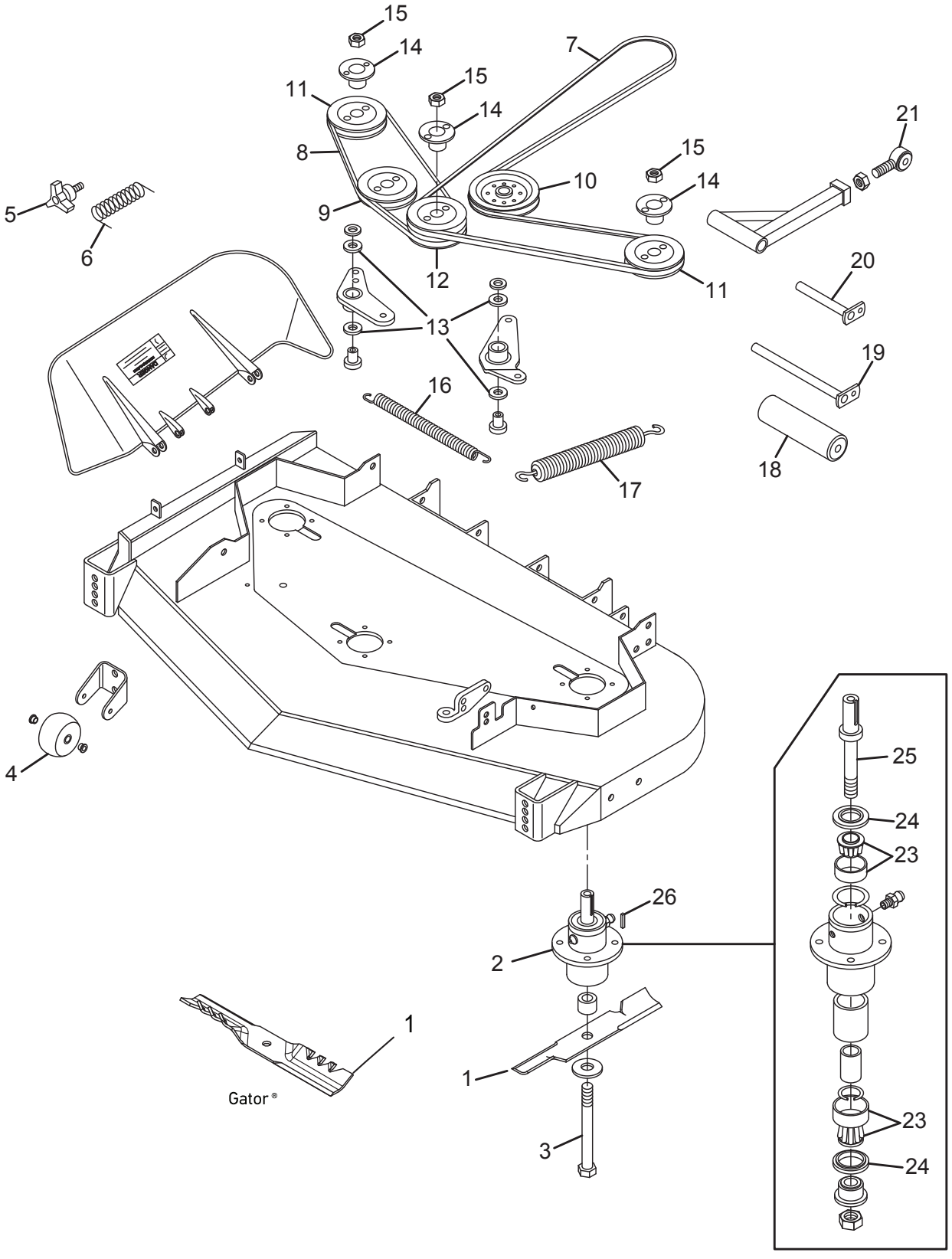

Scag Tiger Cub 48V & 52V Deck Mower

№	Part No.	OEM No.	Description
Blades for 48" Decks with 5/8" Round Center Hole			
1	91-620	481706	Standard-Notch Lift, 16-1/2"
	92-145	482877	High-Notch Lift, 16-1/2"
	91-621	481710	Extreme High-Notch Lift, 16-1/2"
	96-344		Gator® G3™, 16-1/2"
	396-726		Gator G6®, 16-1/2"
Blades for 52" Decks with 5/8" Round Center Hole			
1	91-622	481707	Standard-Notch Lift, 18"
	91-637	482878	High-Notch Lift, 18"
	91-623	481711	Extreme High-Notch Lift, 18"
	96-344		Gator G3, 18"
	596-344		Gator G5™, 18"
	396-726		Gator G6, 18"
Replacement Parts			
2	82-325	461663	Spindle Assembly
3	04-125	04001-41	Blade Bolt, 5/8-11 x 9-1/2"
4	72-758	481632	Deck Wheel
5		491625-01	Wing Nut, 3/8-16
6		482245	Spring, Deflector
7	75-644	483241	Deck Drive Belt, for 48" Deck, 5/8" x 122-1/8"
	75-645	483242	Deck Drive Belt, for 52" Deck, 5/8" x 125-1/2"
8	75-642	483239	Spindle Belt, for 48" Cut, 5/8" x 50-1/4"
		483240	Spindle Belt, for 52" Cut, 5/8" x 54-11/16"
9	78-121	48181	Idler Pulley, OD: 5"
10		483210	Idler Pulley, 5-3/4" x 2-5/16" x 3/8"
11		483282	Spindle Pulley, for 48" Cut, OD: 4-3/4"
		483284	Spindle Pulley, for 52" Cut, OD: 5-3/8"
12		483283	Spindle Pulley, Double
		483285	Spindle Pulley, Double
13	45-242	48224	Bearing
14	78-003	48926	Pulley Collar, Bore: 1-1/8"
15		04020-09	Nut, 5/8-11 UNC
16		483247	Spring
17		483246	Spring
18		48038	Deck Roller
19		45944	Shaft
20		451240	Shaft
21		48763	Turnbuckle Eyelet, 5/8" RH Male Thread
22		04063-08	Key, 1/4" x 2"
23	45-002	481022	Bearing & Race
24	49-314	481024	Seal, Upper
24		481025	Seal, Lower
25		43589	Spindle Shaft

Scag Tiger Cub 61A Deck Mower

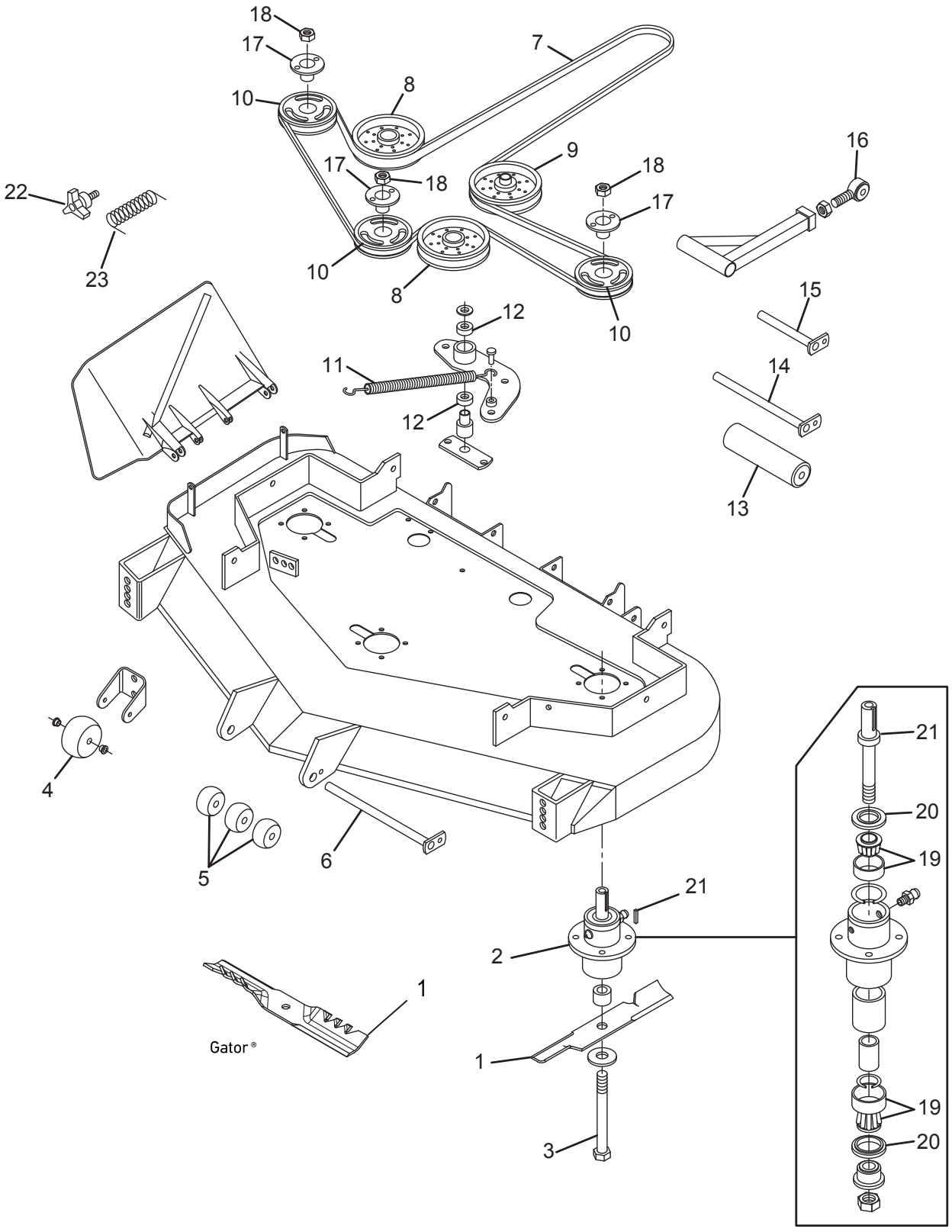

Scag Tiger Cub 61A Deck Mower

№	Part No.	OEM No.	Description
Blades for 61" Decks with 5/8" Round Center Hole			
1	91-638	482879	Standard-Notch Lift, 21"
	91-626	481708	High-Notch Lift, 21"
	91-628	481712	Extreme High-Notch Lift, 21"
	96-347		Gator® G3™, 21"
	596-347		Gator G5™, 21"
	396-727		Gator G6®, 21"
Replacement Parts			
2	82-325	461663	Spindle Assembly
3	04-125	04001-41	Blade Bolt, 5/8-11" x 9-1/2"
4	72-758	481632	Deck Wheel
5		482295	Deck Wheel
6		45944	Shaft
7	75-631	482652	Deck Belt, 5/8" x 175-3/4"
8		482416	Idler Pulley, OD: 5"
9		482743	Idler Pulley, OD: 5"
10		48790	Spindle Pulley
11		482718	Spring, Idler
12	45-242	48224	Bearing
13		48038	Deck Roller
14		45944	Shaft
15		451240	Shaft
16		48763	Turnbuckle Eyelet, 5/8" RH Male Thread
17	78-003	48926	Pulley Collar, Bore: 1-1/8"
18		04020-09	Nut, 5/8-11 UNC
19	45-002	481022	Bearing & Race
20	49-314	481024	Seal, Upper
		481025	Seal, Lower
21		43589	Spindle Shaft
22		491625-01	Wing Nut, 3/8-16
23		482245	Spring, Deflector

Scag Wildcat 52A & 61A Deck Mower

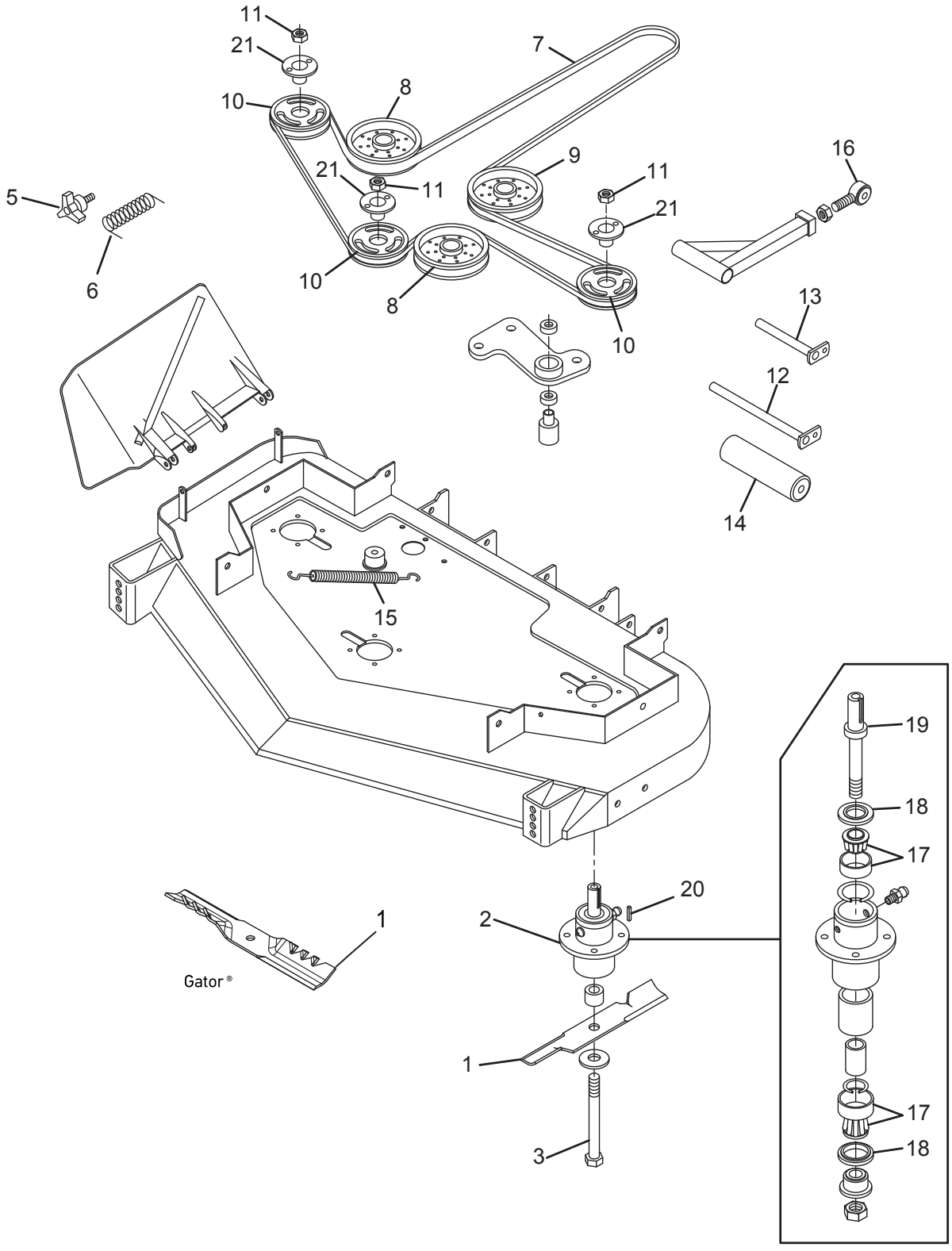

Scag Wildcat 52A & 61A Deck Mower

№	Part No.	OEM No.	Description
Blades for 52" Decks with 5/8" Round Center Hole			
1	91-622	481707	Standard-Notch Lift, 18"
	91-637	482878	High-Notch Lift, 18"
	91-623	481711	Extreme High-Notch Lift, 18"
	96-344		Gator® G3™, 18"
	596-344		Gator G5™, 18"
	396-726		Gator G6®, 18"
Blades for 61" Decks with 5/8" Round Center Hole			
1	91-638	482879	Standard-Notch Lift, 21"
	91-626	481708	High-Notch Lift, 21"
	91-628	481712	Extreme High-Notch Lift, 21"
	96-347		Gator G3, 21"
	596-347		Gator G5, 21"
	396-727		Gator G6, 21"
Replacement Parts			
2	82-325	461663	Spindle Assembly
3	04-125	04001-41	Blade Bolt, 5/8-11" x 9-1/2"
4	72-758	481632	Deck Wheel
5		491625-01	Wing Nut, 3/8-16
6		482245	Spring, Deflector
7	75-629	482530	Deck Drive Belt, for 52" Cut, 5/8" x 155"
	75-631	482652	Deck Drive Belt, for 61" Cut, 5/8" x 175-3/4"
8		482416	Idler Pulley, OD: 5"
9		482743	Idler Pulley, OD: 5"
10		482647	Spindle Pulley, for 52" Cut, OD: 5-3/8"
		482648	Spindle Pulley, for 61" Cut, OD: 7"
11		04020-09	Nut, 5/8-11 UNC
12		45944	Shaft
13		451240	Shaft
14		48038	Deck Roller
15		482718	Spring, Idler
16		48763	Turnbuckle Eyelet, 5/8" RH Male Thread
17	45-002	481022	Bearing & Race
18	49-314	481024	Seal, Upper
		481025	Seal, Lower
19		43589	Spindle Shaft
20		04063-08	Key, 1/4" x 2"
21	78-003	48926	Pulley Collar, Bore: 1-1/8"
22		482295	Deck Wheel, for 61" Cut
23		45944	Shaft, for 61" Cut

Scag Wildcat 52V Deck Mower

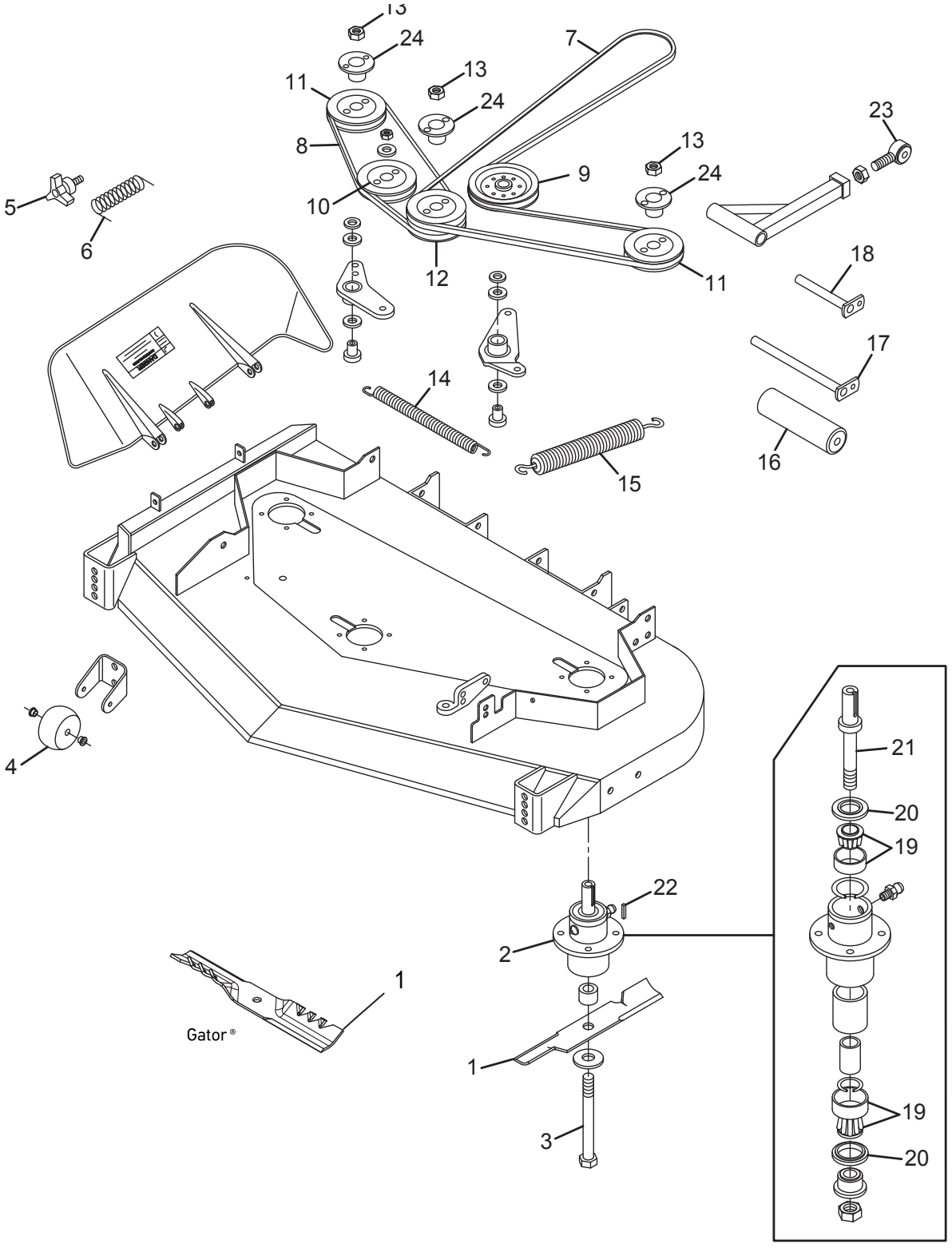

Scag Wildcat 52V Deck Mower

№	Part No.	OEM No.	Description
Blades for 52" Decks with 5/8" Round Center Hole			
1	91-622	481707	Standard-Notch Lift, 18"
	91-637	482878	High-Notch Lift, 18"
	91-623	481711	Extreme High-Notch Lift, 18"
	96-344		Gator® G3™, 18"
	596-344		Gator G5™, 18"
	396-726		Gator G6®, 18"
Replacement Parts			
2	82-325	461663	Spindle Assembly
3		04001-41	Blade Bolt, 5/8-11" x 9-1/2"
4		481632	Deck Wheel
5		491625-01	Wing Nut, 3/8-16
6		482245	Spring, Deflector
7	75-645	483242	Deck Drive Belt, for 52" Cut, 5/8" x 125-1/2"
8		483240	Spindle Belt, for 52" Cut, 5/8" x 54-11/16"
9		483210	Idler Pulley, 5-3/4" x 2-5/16" x 3/8"
10	78-121	48181	Idler Pulley, OD: 5"
11		483284	Spindle Pulley, for 52" Cut, OD: 5-3/8"
12		483285	Spindle Pulley, Double, for 52" Cut
13		04020-09	Nut, 5/8-11 UNC
14		483247	Spring, Idler, RH
15		483246	Spring, Idler, LH
16		48038	Deck Roller
17		45944	Shaft
18		451240	Shaft
19	45-002	481022	Bearing & Race
20	49-314	481024	Seal, Upper
		481025	Seal, Lower
21		43589	Spindle Shaft
22		04063-08	Key, 1/4" x 2"
23		48763	Turnbuckle Eyelet, 5/8" RH Male Thread
24	78-003	48926	Pulley, with Collar, Bore: 1-1/8"

Scag Wildcat 61V Deck Mower

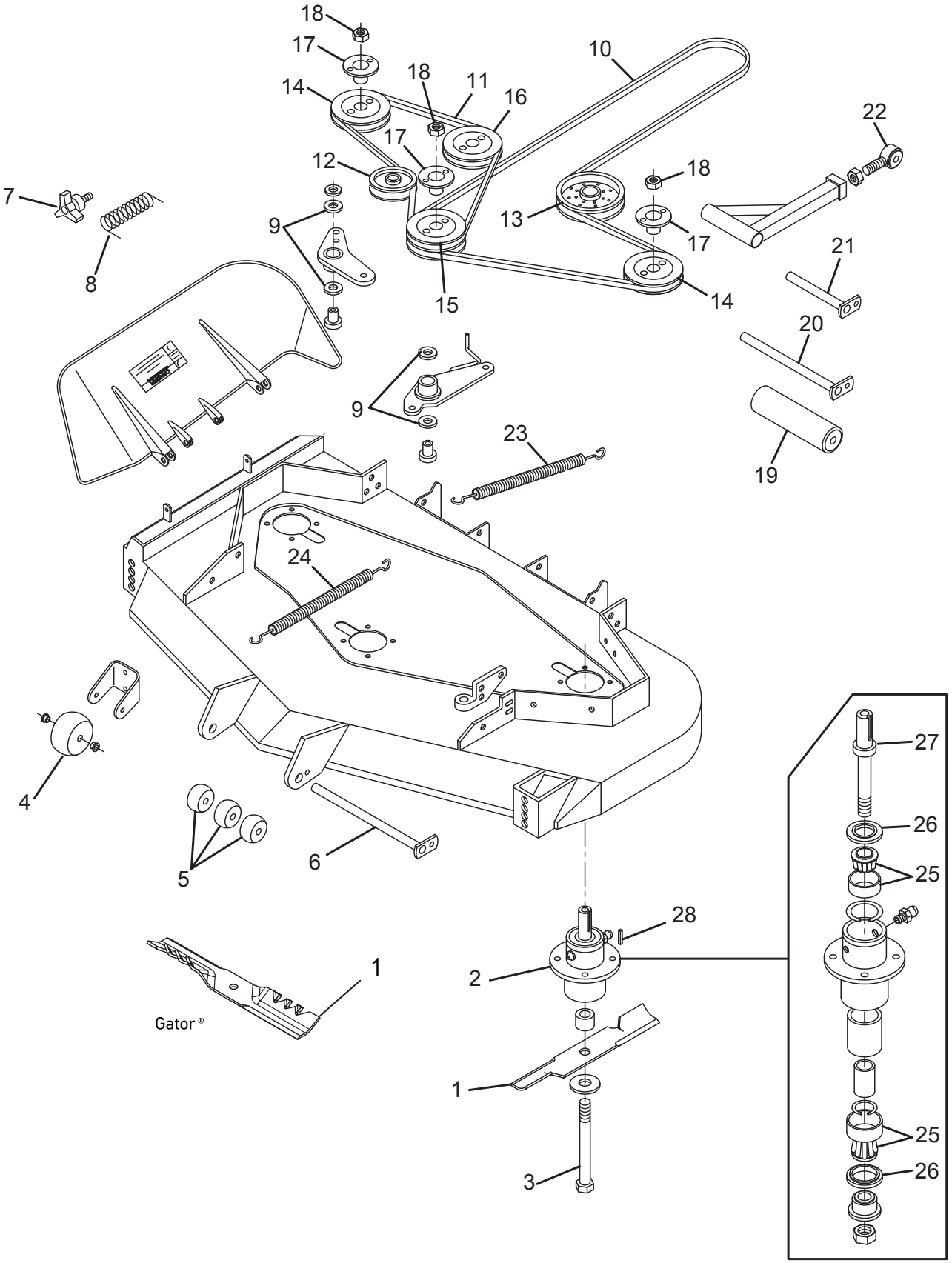

Scag Wildcat 61V Deck Mower

№	Part No.	OEM No.	Description
Blades for 61" Decks with 5/8 " Round Center Hole			
1	91-638	482879	Standard-Notch Lift, 21"
	91-626	481708	High-Notch Lift, 21"
	91-628	481712	Extreme High-Notch Lift, 21"
	96-347		Gator® G3™, 21"
	596-347		Gator G5™, 21"
	396-727		Gator G6®, 21"
Replacement Parts			
2	82-325	461663	Spindle Assembly
3	04-125	04001-41	Blade Bolt, 5/8-11" x 9-1/2"
4	72-758	481632	Deck Wheel
5		482295	Deck Wheel
6		45944	Shaft
7		491625-01	Wing Nut, 3/8"-16
8		482245	Spring, Deflector
9	45-242	48224	Bearing
10	75-646	483243	Deck Drive Belt, 5/8" x 135-3/4"
11	75-637	483157	Spindle Belt, 5/8" x 65-3/16"
12		483415	Idler Pulley, OD: 3-1/2"
13		483210	Idler Pulley, 5-3/4" x 2-5/16" x 3/8"
14		483286	Spindle Pulley
15		483287	Spindle Pulley, Double
16	78-121	48181	Idler Pulley, OD: 5"
17	78-003	48926	Pulley, with Collar, Bore: 1-1/8"
18		04020-09	Nut, 5/8"-11 UNC
19		48038	Deck Roller
20		45944	Shaft
21		451240	Shaft
22		48763	Turnbuckle Eyelet, 5/8" RH Male Thread
23		483246	Spring, LH
24		482797	Spring, RH
25	45-002	481022	Bearing & Race
26	49-314	481024	Seal, Upper
26		481025	Seal, Lower
27		43589	Spindle Shaft
28		04063-08	Key, 1/4" x 2"

Scag 32", 48", 52" & 61" Hydraulic Walk-Behind Mowers

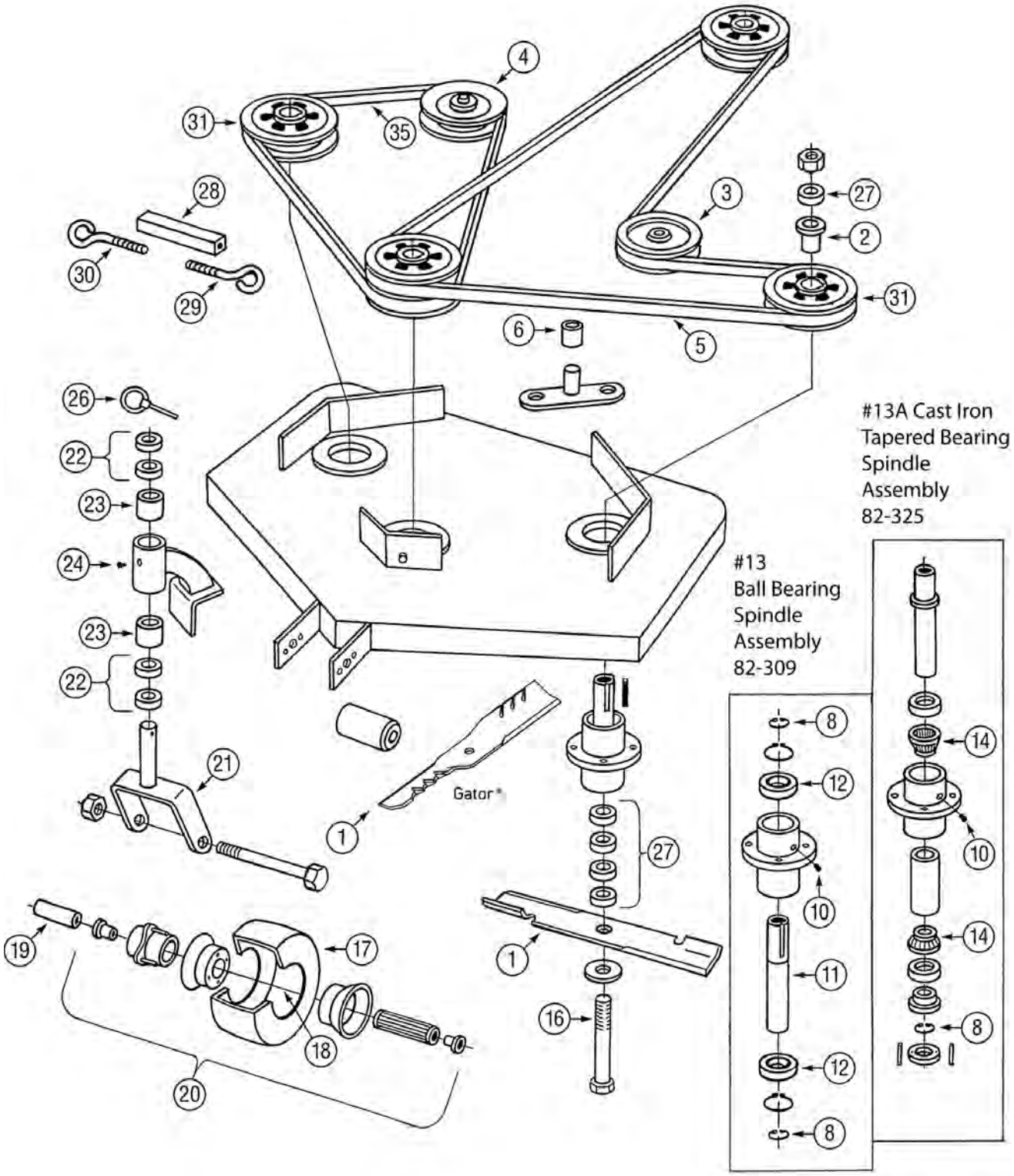

Scag 32", 48", 52", & 61" Hydraulic Walk-Behind Mowers

№	Part No.	OEM No.	Description
Blades for 32" Decks with 5/8" Round Center Hole			
	91-620	481706	Standard-Notch Lift, 16-1/2"
	92-145	482877	High-Notch Lift, 16-1/2"
1	91-621	481710	Extreme High-Notch Lift, 16-1/2"
	96-344		Gator® G3™, 16-1/2"
	396-726		Gator G6®, 16-1/2"
Blades for 48" Decks with 5/8" Round Center Hole			
	91-620	481706	Standard-Notch Lift, 16-1/2"
	92-145	482877	High-Notch Lift, 16-1/2"
1	91-621	481710	Extreme High-Notch Lift, 16-1/2"
	96-344		Gator G3, 16-1/2"
	396-726		Gator G6, 16-1/2"
Blades for 52" Decks with 5/8" Round Center Hole			
	91-622	481707	Standard-Notch Lift, 18"
	91-637	482878	High-Notch Lift, 18"
1	91-623	481711	Extreme High-Notch Lift, 18"
	96-344		Gator G3, 18"
	596-344		Gator G5™, 18"
	396-726		Gator G6, 18"
Blades for 61" Decks with 5/8" Round Center Hole			
	91-638	482879	Standard-Notch Lift, 21"
	91-626	481708	High-Notch Lift, 21"
1	91-628	481712	Extreme High-Notch Lift, 21"
	96-347		Gator G3, 21"
	596-347		Gator G5, 21"
	396-727		Gator G6, 21"
Replacement Parts			
2	78-003	48926	Bushing, for Pulley, ID: 1-1/8"
3	78-300	48269	Idler Pulley
4	78-121	48181	V-Belt, for Idler Pulley
	75-054	48204	Drive Belt, for 36" Deck, 5/8" x 82-5/16"
5	75-055	48089	Drive Belt, for 48" Deck, 5/8" x 89-1/4"
	75-058	48286	Drive Belt, for 52" Deck, 5/8" x 93-1/4"
6		48100-05	Bronze Bushing
8		04050-04	Snap Ring
10	02-010-1	48112-02	Grease Fitting
11	82-305	43001-02	Spindle Shaft
12		48101-01	Bearing, Heavy-Duty
13		46020	Ball Bearing, Spindle Assembly
13A	82-325		Spindle Assembly
14	45-002	48668	Taper Bearing
16	04-125	04001-41	Blade Bolt
17	58-131	48006-02	Tire, 9" x 350-4
18	71-274	48006-03	Tire Tube
19	45-188	43022	Spanner Bushing
20	72-795	48006-01	Complete Assembly
21	48-202	45006	Caster Fork
22	09-804	43037-01	Spacer, 1/2"
23	45-127	48100-01	Bronze Bearing
24	02-010-1	48114-01	Grease Fitting
26	02-446	04066-01	Linchpin, 7/16"
27	48-141	43038	Spacer, for #13 Assembly
28	48-006	43025	Turnbuckle
29		04070-02	Eyebolt, for LH Threads, 5/16"-18
30		0407-01	Eyebolt, for RH Threads, 5/16"-18
31	78-642	48127-01	Deck Pulley
	75-154	48087	Blade Belt, for 48" Cut, 5/8" x 53-3/8"
35	75-048	48285	Blade Belt, for 52" Cut, 5/8" x 56-1/8"
	75-047	48265	Blade Belt, for 61" Cut, 5/8" x 63-1/8"

Scag SM-52

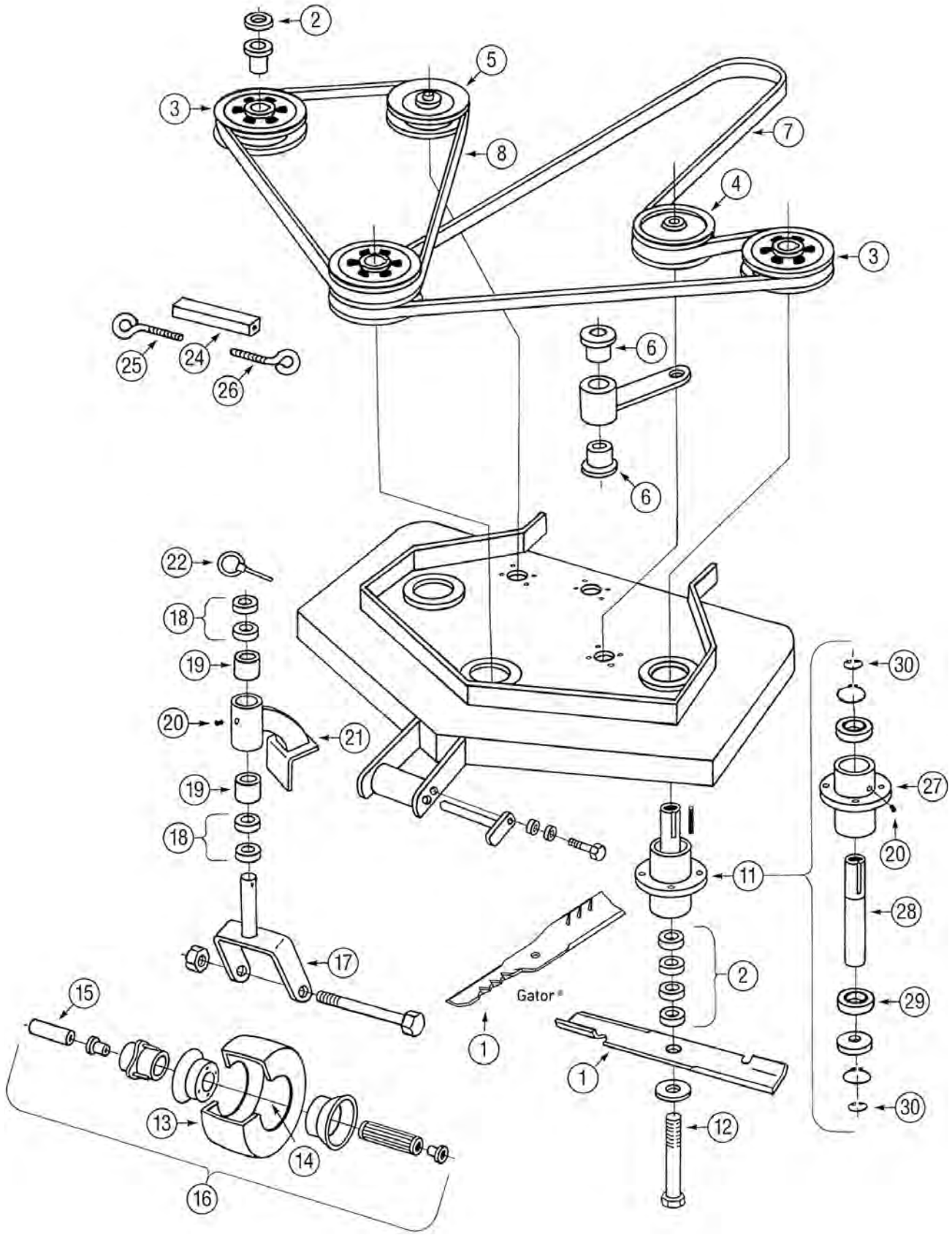
2
5
3
8
7
4
3
25
24
26
6
6
22
18
19
20
21
19
18
17
15
13
14
16
Gator®
1
1
11
2
12
30
27
20
28
29
30

Scag SM-52

№	Part No.	OEM No.	Description
Blades for 52" Decks with 5/8 " Round Center Hole			
1	91-622	481707	Standard-Notch Lift, 18"
	91-637	482878	High-Notch Lift, 18"
	91-623	481711	Extreme High-Notch Lift, 18"
	96-344		Gator® G3™, 18"
	596-344		Gator G5™, 18"
	396-726		Gator G6®, 18"
Replacement Parts			
2	48-141	43278	Spacer, 1/4"
3	78-642	48127-01	Deck Pulley
4	78-300	48269	Idler Pulley
5	78-121	48181	V-Groove Idler Pulley
6	48-320	48100-02	Bushing
7	75-503	48530	Drive Belt, for 52" Cut, 5/8" x 103"
8	75-048	48285	Blade Belt, for small 52", 5/8" x 56-1/8"
11		46020	Spindle Assembly
12	04-125	0402-09	Blade Bolt
13	58-131	48006-02	Tire, 9" x 350-4
14	71-274	48006-03	Tire Tube
15	45-188	43022	Spanner Bushing
16	72-795	48006-01	Wheel Assembly
17	48-202	45006	Caster Fork
18	09-804	43037-01	Spacer, 1/2"
19	45-127	48100-01	Bushing
20	02-010-1	48114-01	Grease Fitting
22	02-446	04066-01	Linchpin, 7/16"
24	48-006	43025	Turnbuckle Link
25		04070-01	Eyebolt, RH Thread
26		04070-02	Eyebolt, LH Thread
28	82-305	43001-02	Spindle Shaft
29		48101-01	Bearing, Heavy-Duty
30		04050-04	Snap Ring

Scag SM-61, SM-72 Cutter Decks

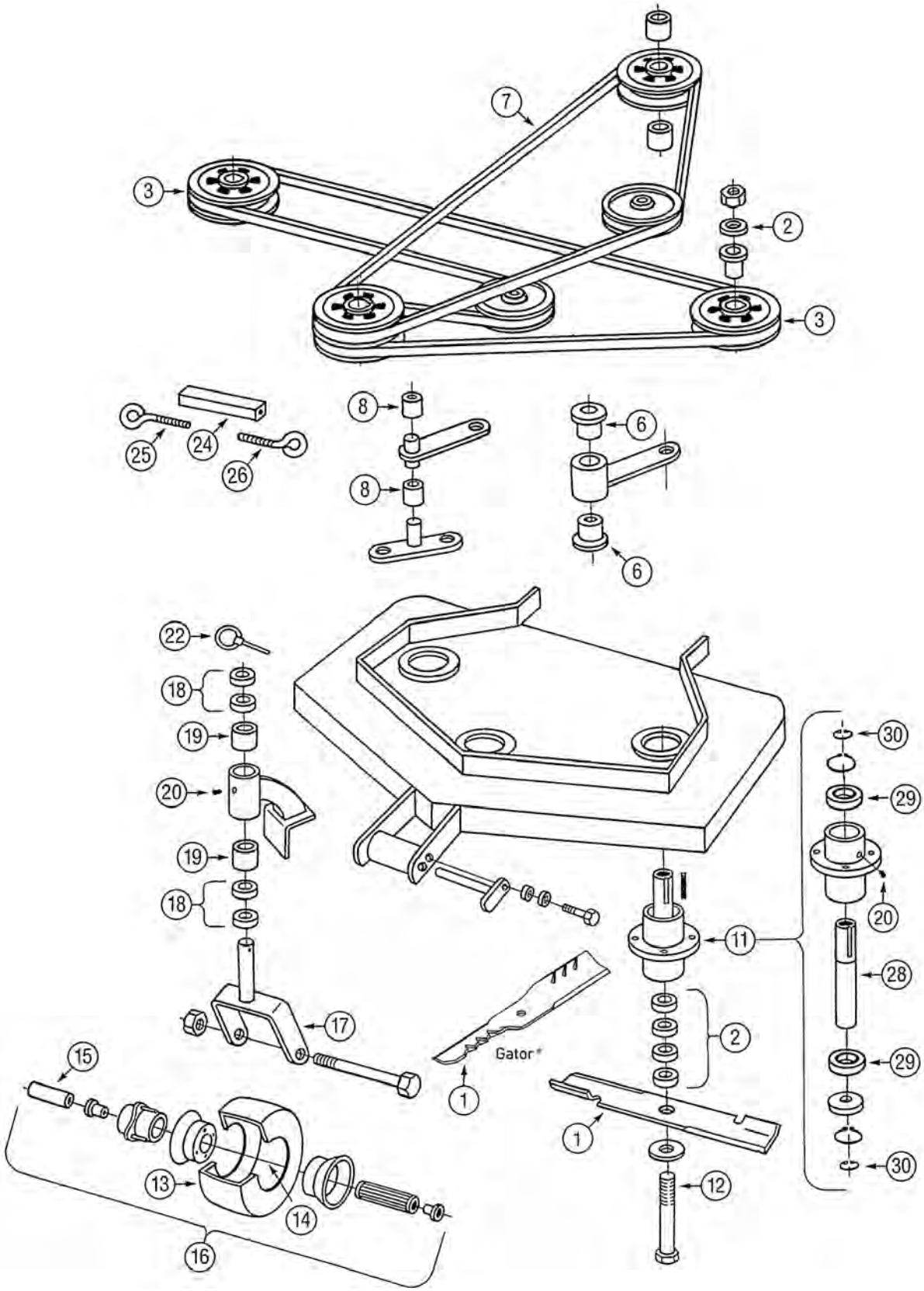

Scag SM-61, SM-72 Cutter Decks

№	Part No.	OEM No.	Description
Blades for 61" Decks with 5/8" Round Center Hole			
1	91-638	482879	Standard-Notch Lift, 21"
	91-626	481708	High-Notch Lift, 21"
	91-628	481712	Extreme High-Notch Lift, 21"
	96-347		Gator® G3™, 21"
	596-347		Gator G5™, 21"
	396-727		Gator G6®, 21"
Blades for 72" Decks with 5/8 " Round Center Hole			
1	91-627	481709	Standard-Notch Lift, 24-1/2"
	92-035	482882	High-Notch Lift, 24-1/2"
	96-341		Gator G3, 24-1/2"
	596-341		Gator G5, 24-1/2"
	396-764		Gator G6, 24-1/2"
Replacement Parts			
2	48-141	43278	Spacer, 1/4"
3	78-642	48127-01	Deck Pulley
6	48-320	48100-02	Bushing
7	75-594	48359	Drive Belt, for 72" Cut, 5/8" x 94"
	75-036	48083	Drive Belt, for 61" Cut, 5/8" x 88-7/8"
8		48100-05	Bushing
11		46020	Spindle Assembly
12	04-125	0402-09	Blade Bolt
13	58-131	48006-02	Tire, 9" x 350-4
14	71-274	48006-03	Tire Tube
15	45-188	43022	Spanner Bushing
16	72-795	48006-01	Wheel Assembly
17	48-202	45006	Caster Fork
18	09-804	43037-01	Spacer, 1/2"
19	45-127	48100-01	Bushing
20	02-010-1	48114-01	Grease Fitting
22	02-446	04066-01	Linchpin, 7/16"
24	48-006	43025	Turnbuckle Link
25		04070-01	Eyebolt, RH Thread
26		04070-02	Eyebolt, LH Thread
28	82-305	43001-02	Spindle Shaft
29		48101-01	Bearing, Heavy-Duty
30		04050-04	Snap Ring

Scag 61" & 72" Hydraulic Drive 3-Wheel Rider

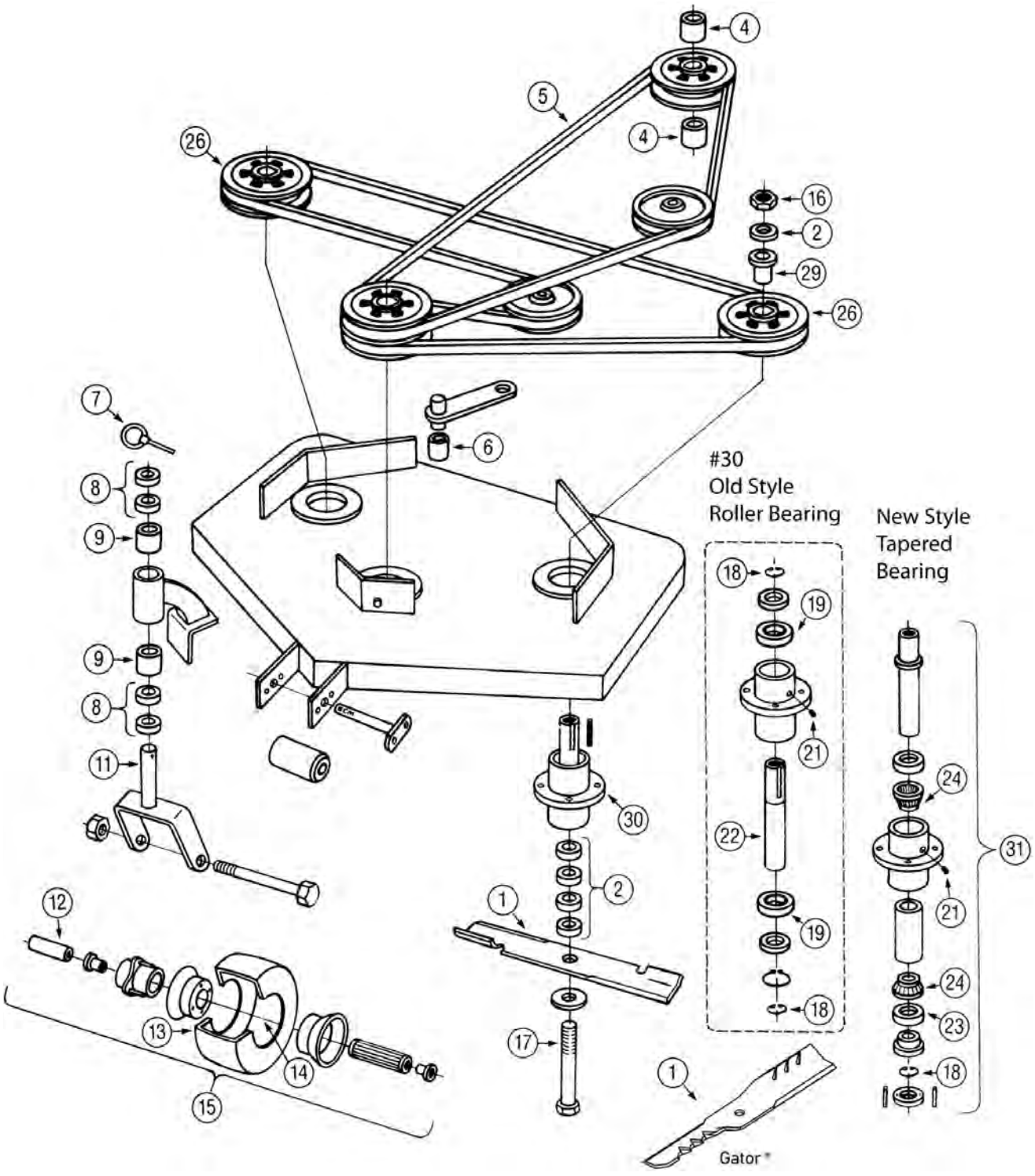

Scag 61" & 72" Hydraulic Drive 3-Wheel Rider

№	Part No.	OEM No.	Description
Blades for 61" Decks with 5/8" Round Center Hole			
1	91-638	482879	Standard-Notch Lift, 21"
	91-626	481708	High-Notch Lift, 21"
	91-628	481712	Extreme High-Notch Lift, 21"
	96-347		Gator® G3™, 21"
	596-347		Gator G5™, 21"
	396-727		Gator G6®, 21"
Blades for 72" Decks with 5/8" Round Center Hole			
1	91-627	481709	Standard-Notch Lift, 24-1/2"
	92-035	482882	High-Notch Lift, 24-1/2"
	96-341		Gator G3, 24-1/2"
	596-341		Gator G5, 24-1/2"
	396-764		Gator G6, 24-1/2"
Replacement Parts			
2	09-802	43038	Blade Spacer, 1/4"
4	45-257	48102	Bearing
5	75-594	48359	Engine-to-Deck Belt, for 72", 5/8" x 94"
	75-036	48083	Engine-to-Deck Belt, for 61", 5/8" x 88-7/8"
6		48100-05	Bronze Bearing
7	02-446	04066-01	Linchpin, 7/16"
8	09-804	43037-01	Spacer, Thickness: 1/2"
9	45-127	48100-01	Bronze Bearing
11	48-202	45006	Caster Yoke
12	45-188	43022	Spanner Bushing
13	72-795	48307-01	Tire, 410/350-4
14	71-274	48006-03	Tire Tube
15	72-795	46079	Complete Wheel Assembly
16		04020-09	Hex Nut
17	04-125	04001-41	Hex Bolt
18		04050-04	Retaining Ring, Small
19	45-220	48101-02	Spindle Bearing, Heavy-Duty
21	02-010-1	48114-02	Grease Fitting
22	82-305	43001-02	Spindle Shaft
24	45-002	48668	Tapered Bearing
26	78-642	48127	Spindle Pulley
30		46020	Spindle Assembly
31	82-325		Spindle Assembly, Cast Iron

Honda GX160

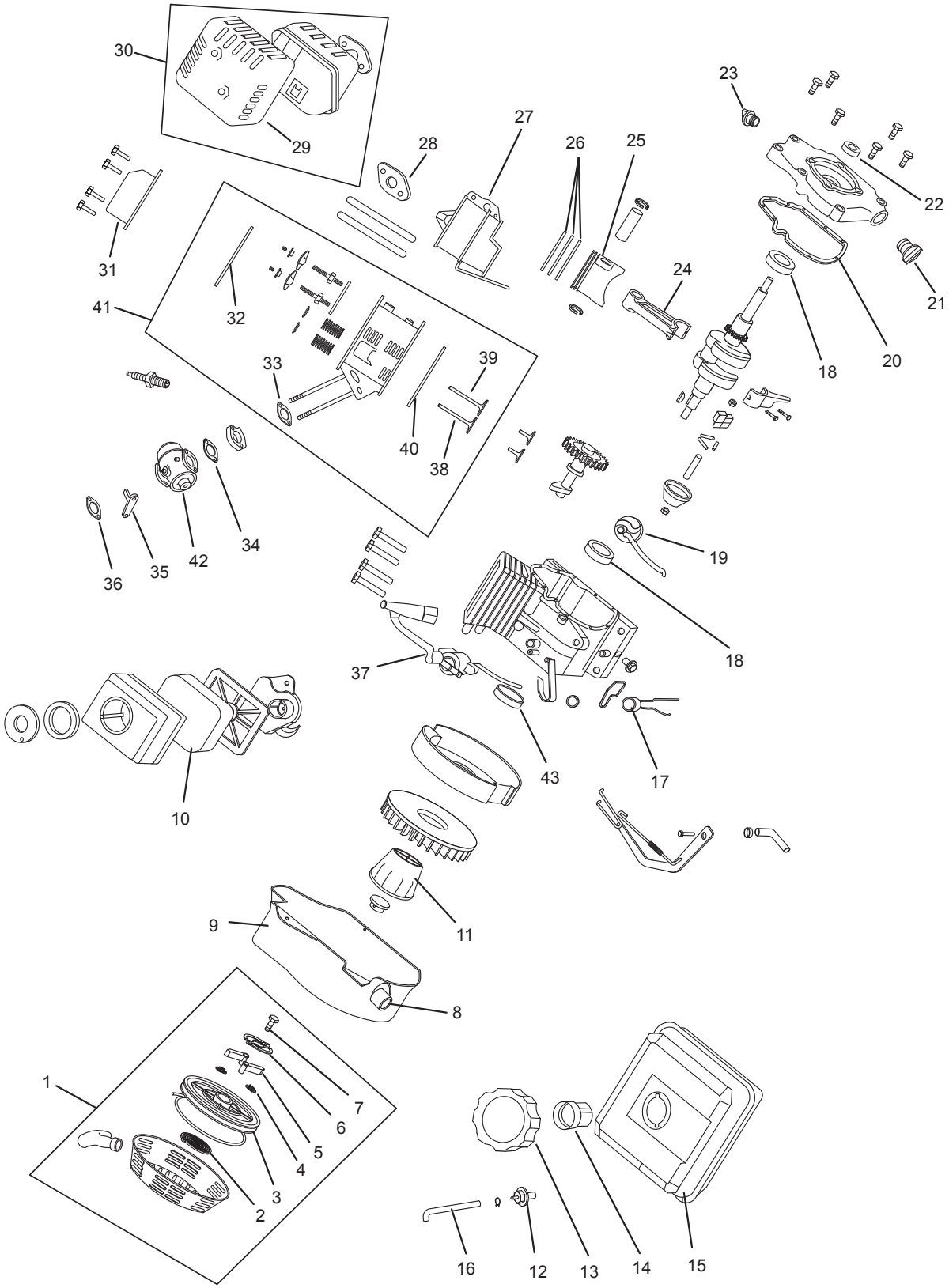
30
29
28
27
26
25
23
22
31
41
32
24
21
33
39
18
20
40
38
34
36
35
42
19
18
37
43
17
10
11
9
8
1
7
6
5
4
3
2
16
12
13
14
15

Honda GX160

№	Part No.	OEM No.	Description
1	31-052	28400-ZH8-013ZA	Starter Assembly, New Style
2	43-425	28442-ZH8-003	Starter Spring
3	31-023	28420-ZH8-013	Starter Pulley
4	31-058	28443-ZH8-003	Starter Pawl Spring
5	31-025	28422-ZH8-013	Starter Pawl
6	31-027	28433-ZH8-003	Starter Pawl Retainer
7	31-028	90003-ZH8-003	Starter Center Screw
8	33-013	36100-ZE1-015	Switch, On/Off
9		19610-ZE1-000ZA	Blower Housing
10	30-346	17211-ZE1-000	Air Filter
11	31-026	28451-ZH8-003	Starter Cup
12	07-393	16955-ZE1-000	Fuel Tank Joint
13	55-126	17620-ZE2-W00	Fuel Cap, Plastic
14	07-118	17672-ZE2-W01	Fuel Strainer
15	07-600	17510-ZE1-020ZA	Fuel Tank
16	07-060	95001-45200-40S	Fuel Line
17	33-542	34150-ZH7-003	Diode Assembly
18		96100-62050-00	Ball Bearing, Crankshaft
		91001-ZF1-003	Ball Bearing, Crankshaft
19	33-541	15510-ZE1-033	Oil Level Switch
20	50-450	11381-ZH8-801	Gasket, Sump Cover
21	49-196	15600-ZE1-003	Oil Cap & Indicator
22	49-208	91202-883-005	Oil Seal PTO
23	50-454	15600-ZG4-003	Oil Cap
24	36-141	13200-ZE1-010	Connecting Rod (Standard)
25	36-243	13101-ZF7-010	Piston (Standard)
26	36-043	13010-ZF1-023	Ring Set (Standard)
27		19630-ZH8-000	Shield, Lower Cylinder
28	50-425	18381-ZH6-800	Gasket, Muffler
29	35-041	18320-ZF1-H01	Muffler Shield
30	35-038	18310-ZF1-000	Muffler Assembly
31		12310-ZE1-020	Rocker Cover
32	50-432	12391-ZE1-000	Gasket, Rocker Cover
33	49-183	16212-ZH8-800	Gasket, Carburetor Insulator
34	49-190	16221-ZH8-801	Gasket, Carburetor
35	49-914	16610-ZE1-000	Lever, Choke
36	49-185	16220-ZE1-020	Gasket, Air Cleaner
37	33-348	30500-ZE1-033	Ignition Coil
38	36-521	14711-ZF1-000	Valve, Intake
39	36-522	14721-ZF1-000	Valve, Exhaust
40	50-556	12251-ZF1-000	Gasket, Cylinder Head
41	36-530		Long Head Assembly
42	50-638	16100-ZH8-W50	Carburetor Assembly
43	49-208	91202-883-005	Oil Seal MAG

Honda GX240

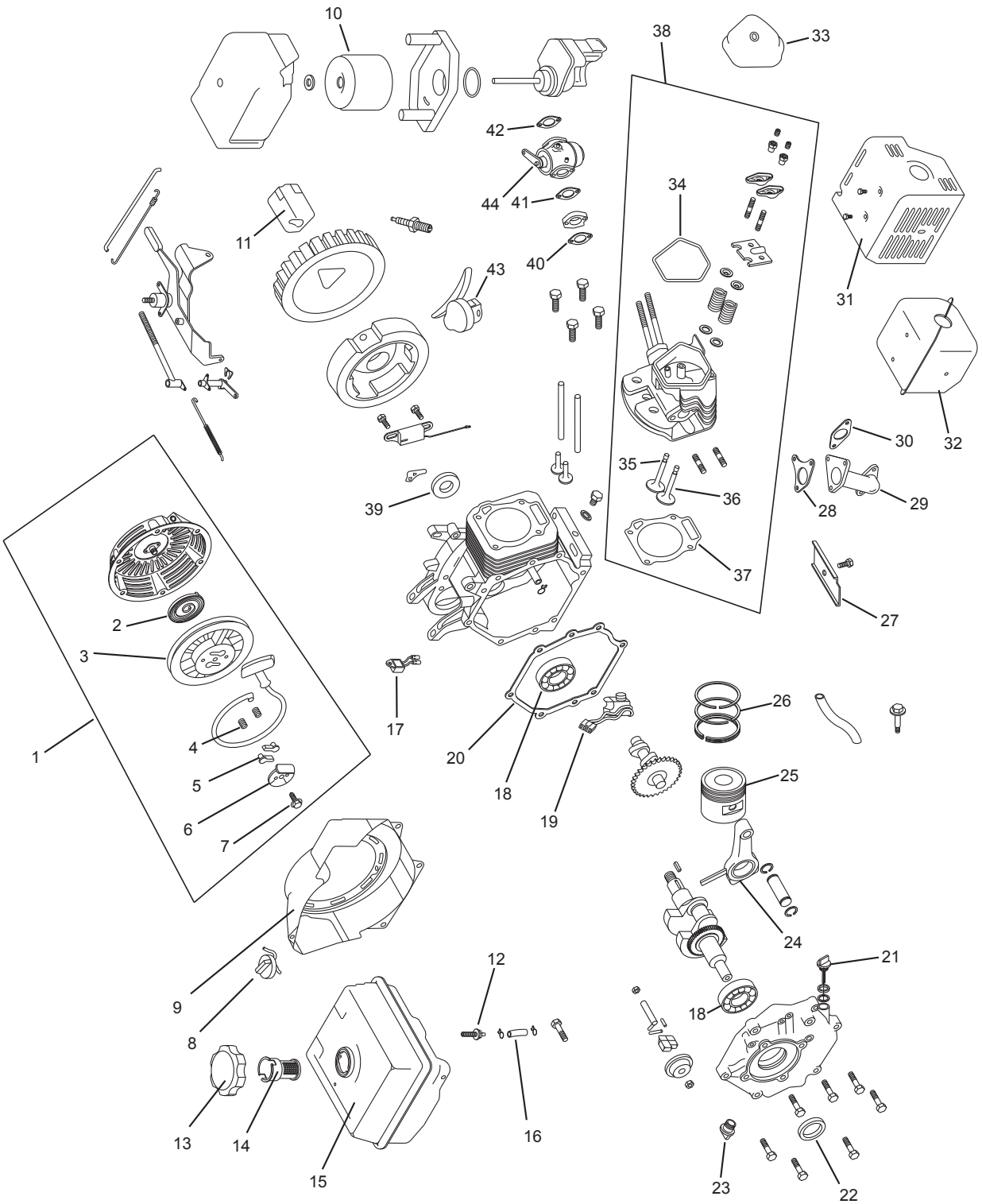
10
38
33
42
44
41
34
11
40
43
31
32
30
35
36
39
28
29
37
27
2
3
17
20
18
19
26
25
1
4
5
6
7
24
21
9
8
12
18
13
14
16
15
23
22

Honda GX240

№	Part No.	OEM No.	Description
1	31-049	28400-ZE2-W01ZA	Starter Assembly
2	43-426	28442-ZE2-W01	Starter Spring
3		28421-ZE2-W01	Starter Pulley
4	31-087	28443-ZE2-W01	Starter Pawl Spring
5	31-083	28422-ZE2-W01	Starter Pawl
6		28444-ZE2-W01	Starter Pawl Retainer
7	31-032	90004-ZE2-W01	Starter Center Screw
8	33-013	36100-ZE1-015	Switch, On/Off
9		19610-ZE2-010ZA	Blower Housing
10	30-406	17210-ZE2-505	Air Filter
11		28450-ZE2-W11	Starter Cup with Screen
12	07-393	16955-ZE1-000	Fuel Tank Joint
13	07-319	17620-ZH7-023	Fuel Cap
14	07-118	17672-ZE2-W01	Fuel Strainer
15	07-601	17510-ZE2-010ZA	Fuel Tank
16	07-061	95001-45300-40S	Fuel Line
17	33-542	34150-ZH7-003	Diode Assembly Oil Alert
18		96100-62060-00	Ball Bearing, Crankshaft
19	33-540	15510-ZE2-033	Oil Level Switch
20	50-452	11381-ZE2-800	Gasket, Sump Cover
21	50-453	15600-735-003	Oil Cap & Indicator
22	49-193	91201-890-003	Oil Seal PTO 30X46X8
23	50-454	15600-ZG4-003	Oil Cap
24	36-142	13200-ZE2-000	Connecting Rod (Standard)
25	36-244	13101-ZE2-W00	Piston (Standard)
26	36-044	13010-ZE2-013	Ring Set (Standard)
27		19631-ZE2-D00	Shield, Cylinder
28	50-423	18381-ZE2-W10	Gasket, Muffler
29	35-045	18330-ZH9-N00	Muffler Pipe
30	50-426	18333-ZE3-800	Gasket, Muffler Pipe
31	35-043	18320-ZE2-W61	Muffler Shield
32	35-034	18310-ZE2-W61	Muffler Assembly
33		12310-ZE2-020	Rocker Cover
34	50-431	12391-ZE2-020	Gasket, Rocker Cover
35	36-523	14711-ZE2-000	Valve, Intake
36	36-524	14721-ZE2-000	Valve, Exhaust
37	50-553	12251-ZE2-800	Gasket, Cylinder Head
38	36-535		Long Head Assembly
39	49-193	91201-890-003	Oil Seal MAG 30X46X8
40	49-191	16223-ZA0-800	Gasket, Carburetor Insulator
41	49-187	16221-ZA0-800	Gasket, Carburetor
42	49-184	16220-ZA0-702	Gasket, Air Cleaner Housing
43	33-521	30500-ZE2-023	Ignition Coil
44	50-634	16100-ZE2-W71	Carburetor Assembly
45	49-914	16610-ZE1-000	Choke Lever

Honda GX340

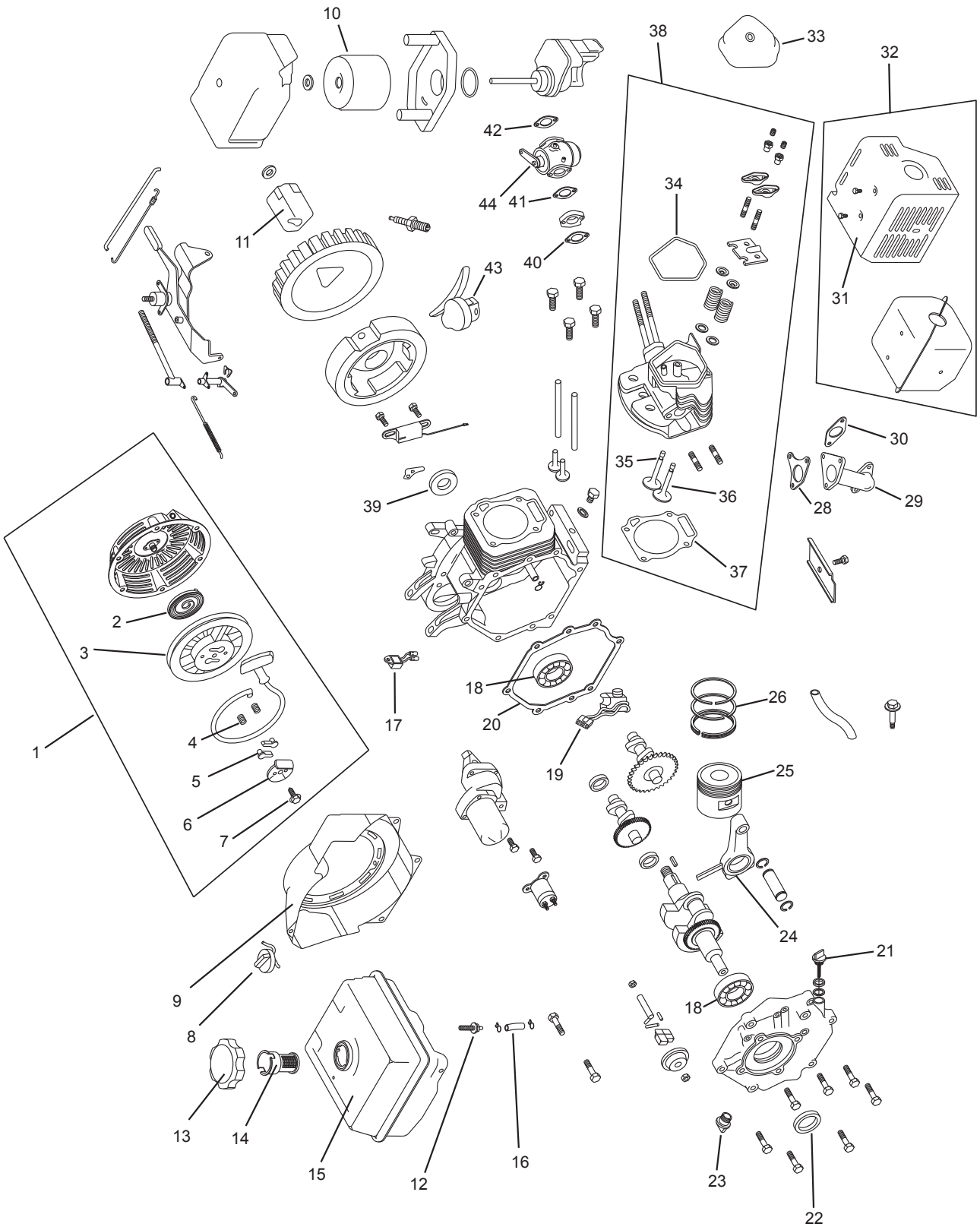
10
38
33
32
42
34
44
41
11
40
43
31
30
35
36
28
29
39
37
2
3
18
26
17
20
19
4
25
5
6
7
24
21
9
18
8
13
14
15
12
16
23
22

Honda GX340

№	Part No.	OEM No.	Description
1	31-060	28400-ZE3-W01ZA	Starter Assembly, New Style
2	43-426	28442-ZE2-W01	Starter Spring
3	31-034		Starter Pulley
4	31-087	28443-ZE2-W01	Starter Pawl Spring
5	31-083	28422-ZE2-W01	Starter Pawl
6		28434-ZE8-811	Starter Pawl Retainer
7		90003-ZG0-003	Starter Center Screw
8	33-013	36100-ZE1-015	Switch, On/Off
9		19610-ZE3-010ZA	Blower Housing
10	30-417	17210-ZE3-505	Air Filter
11	31-037	28451-ZE3-A02	Starter Cup
12	07-393	16955-ZE1-000	Fuel Tank Joint
13	07-319	17620-ZH7-023	Fuel Cap
14	07-118	17672-ZE2-W01	Fuel Strainer
15	07-602	17510-ZE3-010ZA	Fuel Tank
16		95001-45300-40S	Fuel Line
17	33-542	34150-ZH7-003	Diode Assembly
18		96100-62070-000	Ball Bearing, Crankshaft
19	33-540	15510-ZE2-033	Oil Level Switch
20	50-455	11381-ZE3-801	Gasket, Sump Cover
21	50-453	1560-735-003	Oil Cap & Indicator
22	49-207	91201-ZE3-004	Oil Seal PTO
23	50-454	15600-ZG4-003	Oil Cap
24	36-143	13200-ZE3-020	Connecting Rod (Standard)
25	36-245	13101-ZE3-W00	Piston (Standard)
26	36-045	13010-ZE3-003	Ring Set (Standard)
27			Shield, Cylinder
28	50-423	18381-ZE2-W10	Gasket, Muffler
29	35-045	18330-ZH9-N00	Muffler Pipe
30	50-426	18333-ZE3-800	Gasket, Muffler Pipe
31	35-044	18320-ZE3-W01	Muffler Shield
32	35-036	18310-ZE2-W61	Muffler Assembly
33		04108-ZE2-000	Rocker Cover
34	50-431	12391-ZE2-020	Gasket, Rocker Cover
35	36-325	14711-ZE3-000	Valve, Intake
36	36-326	14721-ZE3-000	Valve, Exhaust
37	50-554	12251-ZE3-000	Gasket, Cylinder Head
38	36-531		Long Head Assembly
39	49-207	91201-ZE3-004	Oil Seal MAG
40	49-192	16223-ZE3-W00	Gasket, Carburetor Insulator
41	49-189	16221-ZF6-800	Gasket, Carburetor
42	49-184	16220-ZA0-702	Gasket, Air Cleaner Housing
43	33-521	30500-ZE2-023	Ignition Coil
44	49-915	16100-ZE3-V01	Carburetor Assembly
45	49-914	16610-ZE1-000	Choke Lever

Honda GX390

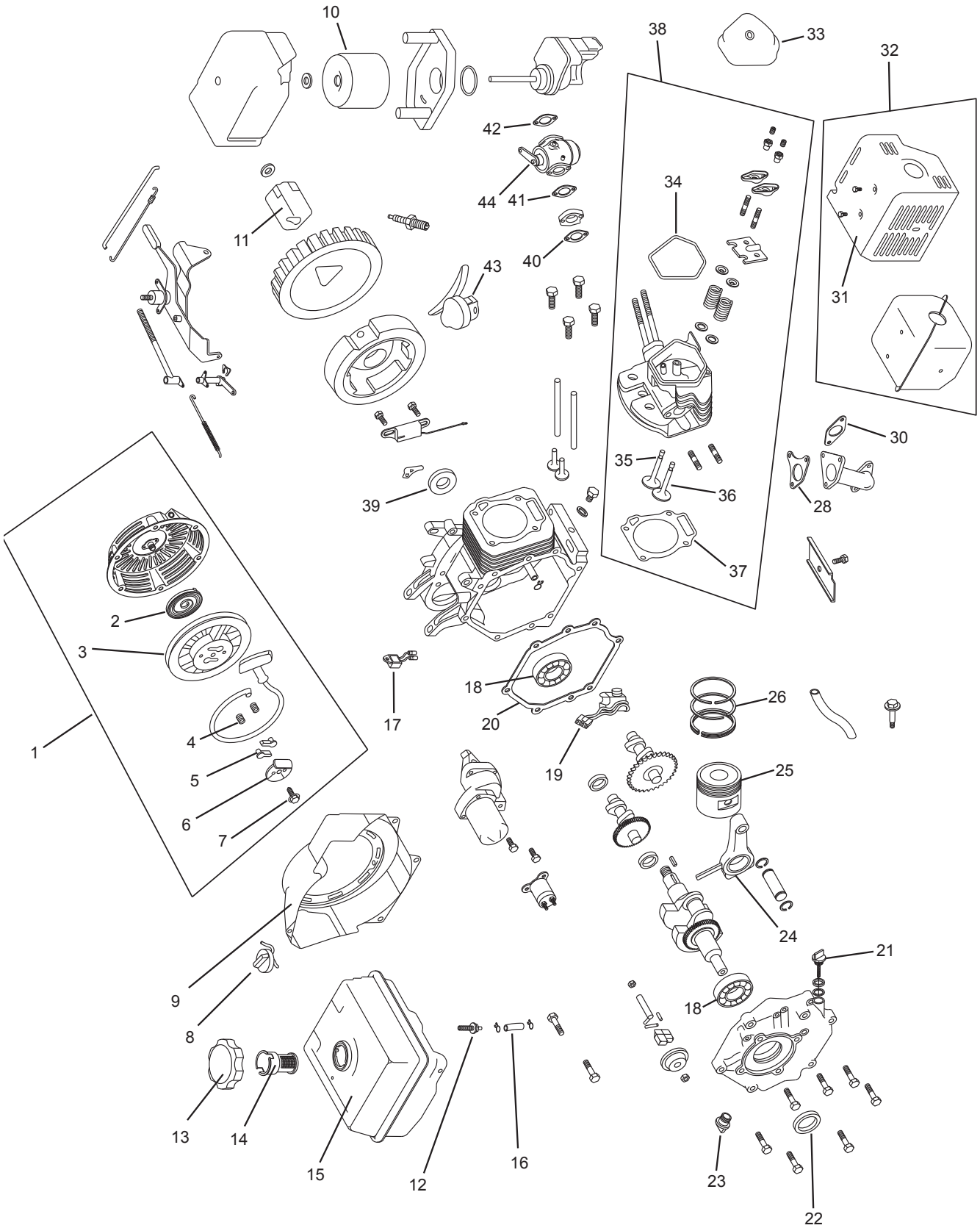
10
38
33
32
42
44
41
34
11
40
43
31
30
35
36
28
39
37
2
3
18
26
17
20
19
4
25
1
5
6
7
24
21
9
18
8
13
14
15
12
16
23
22

Honda GX390

№	Part No.	OEM No.	Description
1	31-060	28400-ZE3-W01ZA	Starter Assembly
2	43-426	28442-ZE2-W01	Starter Spring
3	31-034	28421-ZE3-W01	Starter Pulley
4	31-087	28443-ZE2-W01	Starter Pawl Spring
5	31-083	28422-ZE2-W01	Starter Pawl
6		28434-ZE8-811	Starter Pawl Retainer
7		90003-ZG0-003	Starter Center Screw
8	33-013	36100-ZE1-015	Switch, On/Off
9		19610-ZE3-010ZA	Blower Housing
10	30-417	17210-ZE3-505	Air Filter
11	31-037	28451-ZE3-A02	Starter Cup
12	07-393	16955-ZE1-000	Fuel Tank Joint
13	07-319	17620-ZH7-023	Fuel Cap
14	07-118	17672-ZE2-W01	Fuel Strainer
15	07-602	17510-ZE3-010ZA	Fuel Tank
16	07-061	95001-45300-40S	Fuel Line
17	33-542	34150-ZH7-003	Diode Assembly
18		96100-62070-000	Ball Bearing, Crankshaft
19	33-540	15510-ZE2-033	Oil Level Switch
20	50-455	11381-ZE3-801	Gasket, Sump Cover
21	50-453	15600-735-003	Oil Cap & Indicator
22	49-207	91201-ZE3-004	Oil Seal PTO
23	50-454	15600-ZG4-003	Oil Cap
24	36-143	13200-ZE3-020	Connecting Rod (Standard)
25	36-246	13101-ZF6-W00	Piston (Standard)
26	36-046	13010-ZF6-003	Ring Set (Standard)
28	50-423	18381-ZE2-W10	Gasket, Muffler
30	50-426	18333-ZE3-800	Gasket, Muffler Pipe
31	35-044	18320-ZE3-W01	Muffler Shield
32	35-036	18310-ZE2-W61	Muffler Assembly
33		04108-ZE2-000	Rocker Cover
34	50-431	12391-ZE2-020	Gasket, Rocker Cover
35	36-325	14711-ZE3-000	Valve, Intake
36	36-326	14721-ZE3-000	Valve, Exhaust
37	50-555	12251-ZF6-W00	Gasket, Cylinder Head
38	36-531		Long Head Assembly
39	49-207	91201-ZE3-004	Oil Seal MAG
40	49-192	16223-ZE3-W00	Gasket, Carburetor Insulator
41	49-189	16221-ZF6-800	Gasket, Carburetor
42	49-184	16220-ZA0-702	Gasket, Air Cleaner Housing
43	33-521	30500-ZE2-023	Ignition Coil
44	50-637	16100-ZF2-V01	Carburetor Assembly
45	49-914	16610-ZE1-000	Choke Lever

Honda GXV120

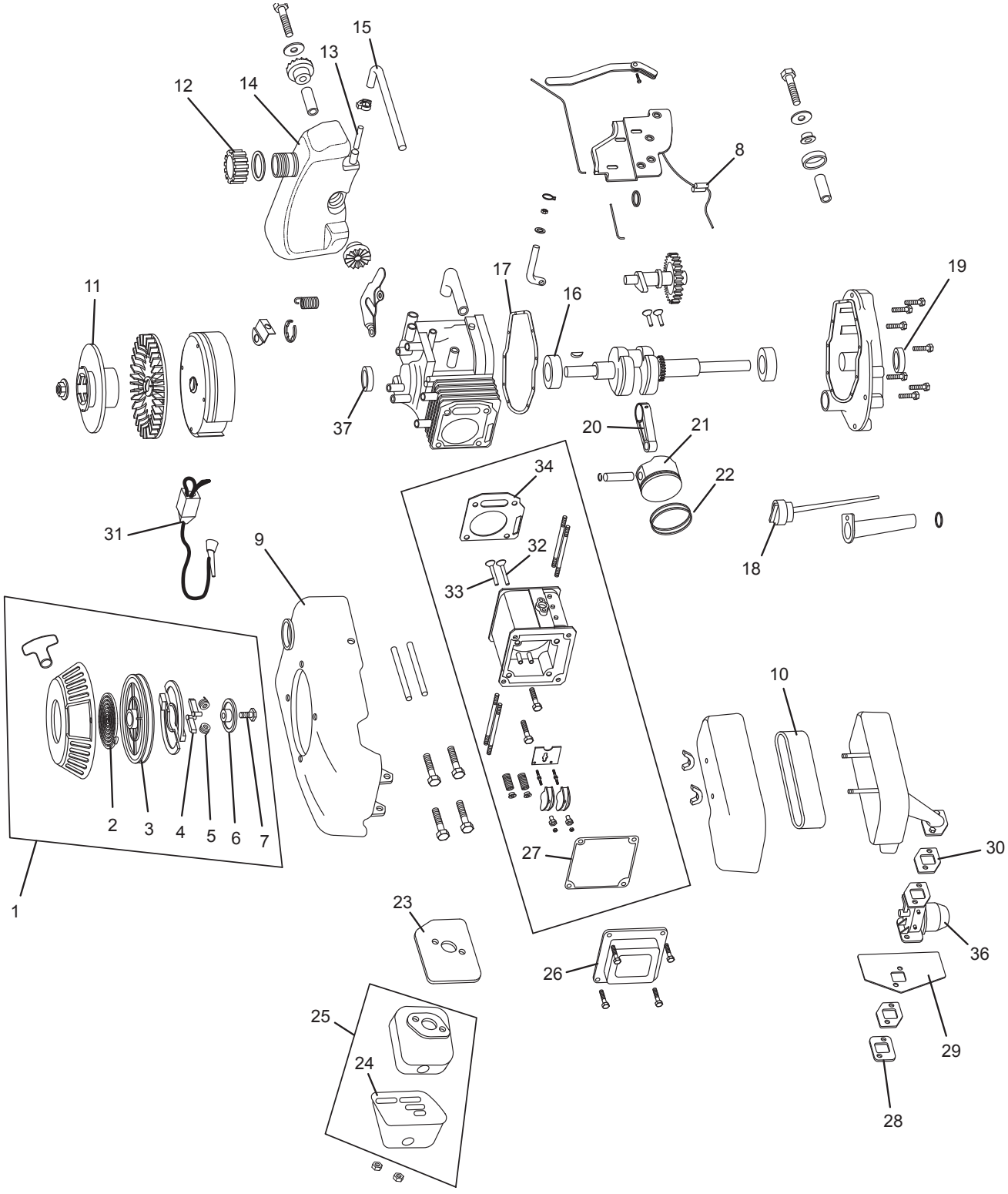

Honda GXV120

№	Part No.	OEM No.	Description
1		28400-ZE6-003ZA	Starter Assembly
2		28442-ZE6-003	Starter Spring
3		28420-ZE6-003	Starter Pulley
4		28443-896-000	Starter Pawl Spring
5		28422-896-010	Starter Pawl
6		28431-896-000	Starter Pawl Retainer
7		92101-06012-0H	Starter Center Screw
8		36100-ZE6-651	Switch, On/Off
9		19610-ZE6-020ZA	Blower Housing
10	30-400	17210-ZE6-505	Air Filter
11		28451-ZE6-003	Starter Cup
12	07-318	17620-ZE7-000	Fuel Cap
13		16952-ZE6-000	Fuel Strainer
14		17510-ZE6-000	Fuel Tank
15		17612-ZE6-000	Fuel Line
16		91001-878-003	Ball Bearing, Crankshaft
17		11381-ZG9-J60	Gasket, Sump Cover
18		15620-ZE6-810	Oil Cap & Indicator
19	49-194	9152-894-004	Oil Seal PTO 25x38x7
20		13200-ZE6-010	Connecting Rod (Standard)
21		13101-ZE6-023	Piston (Standard)
22		13010-ZE6-014	Ring Set (Standard)
23		18381-ZE6-820	Gasket, Muffler
24		18320-ZE6-020	Muffler Shield
25		183A1-ZE6-003	Muffler Assembly
26		12310-ZE7-000	Rocker Cover
27	50-433	12391-ZE7-M10	Gasket, Rocker Cover
28	49-182	16212-ZG9-J60	Gasket, Carburetor Insulator
29	49-182	16212-ZG9-J60	Gasket, Carburetor
30	49-186	16220-ZE6-010	Gasket, Air Cleaner
31	33-522	30500-ZG9-M02	Ignition Coil
32		14711-ZE0-010	Valve, Intake
33		14721-ZE6-010	Valve, Exhaust
34	50-428	12251-ZE6-000	Gasket, Cylinder Head
36	50-635	16100-ZE6-W01	Carburetor Assembly
37		91202-ZE6-003	Oil Seal MAG 22x35x6

Honda GXV160

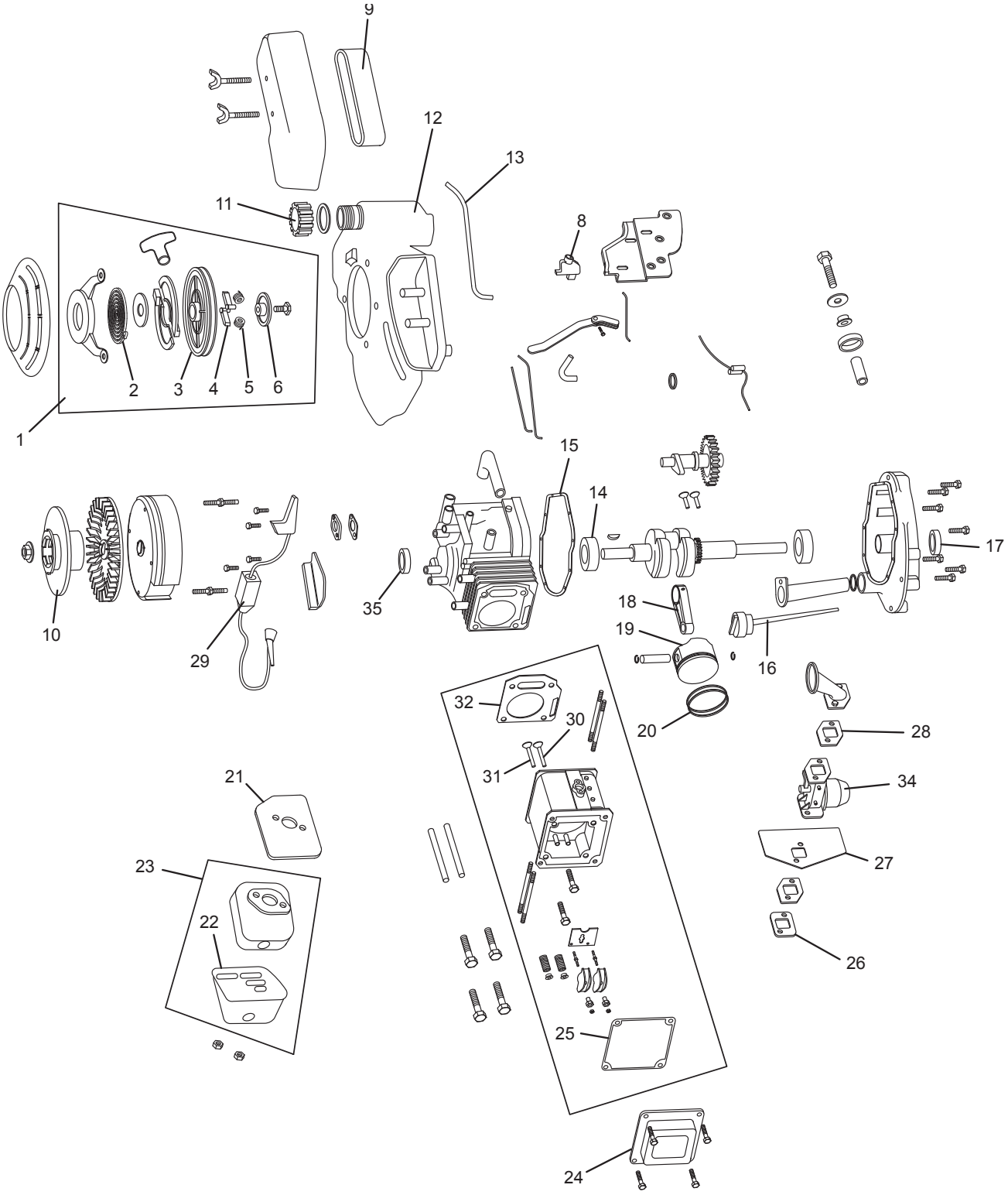

Honda GXV160

№	Part No.	OEM No.	Description
1	31-070	28400-ZG9-802	Starter Assembly
2	31-081	28415-ZG9-802	Starter Spring
3		28415-ZG9-802	Starter Pulley
4	31-090	28486-ZE6-T02	Starter Pawl Spring
5		28485-ZE6-T02	Starter Pawl
6		28444-ZG9-802	Starter Pawl Retainer
8	33-013	36100-ZE7-W01	Switch, On/Off
9	30-015	17211-ZE7-W02	Air Filter
10		28451-ZE7-W00	Starter Cup
11	07-318	17620-ZE7-000	Fuel Cap
12		19610-ZE7-W00ZB	Fuel Tank
13		17700-ZE7-W00	Fuel Line
14		96100-62050-00(10)	Ball Bearing, Crankshaft
15		11381-ZE7-M10	Gasket, Sump Cover
16		15620-ZE6-810	Oil Cap & Indicator
17	49-194	9152-894-004	Oil Seal PTO 25x38x7
18		13200-ZE7-000	Connecting Rod (Standard)
19		13101-ZE7-010	Piston (Standard)
20	36-043	13010-ZF1-023	Ring Set (Standard)
21		18381-ZE6-820	Gasket, Muffler
22		18320-ZG9-M01	Muffler Shield
23		18310-ZG9-J01	Muffler Assembly
24		12311-ZG9-800	Rocker Cover
25	50-433	12391-ZE7-T00	Gasket, Rocker Cover
26	49-181	16212-ZE7-M10	Gasket, Carburetor Insulator
27		16221-ZE7-M11	Gasket, Carburetor
28	49-186	16220-ZE6-010	Gasket, Air Cleaner
29	33-520	30500-ZE7-033	Ignition Coil
30		14711-ZE7-000	Valve, Intake
31		14721-ZE7-000	Valve, Exhaust
32		12251-ZE7-000	Gasket, Cylinder Head
34	50-636	16100-ZE7-W21	Carburetor Assembly
35	49-194	9152-894-004	Oil Seal MAG 25x38x7

SECTIONS A–B

Air Filters . . . . . LG 176–222

Bearings & Bushings . . . . . LG 223–249

Belts . . . . . LG 250–339

Blade Adaptors . . . . . LG 340–343

Blades, Overview . . . . . LG 344–349

Blades by Length . . . . . LG 350–367

Blades, Universal . . . . . LG 368

Blades, Replacements . . . . . LG 369–583

Blades, Edgers . . . . . LG 584–591

Air Filters

Shop Packs

Oregon® premium quality air filters are more profitable than ever when you stock the "Shop Packs."

- Save 10% or more compared to packaged filters
- Buy in larger quantity and save
- 5 air filters in each Shop Pack
- Oregon packaging

Blister Packs

Put the Oregon name and quality on display.

- Puts the filter out where the end user can see it
- Helps self sell
- Frees up counter and shelf space

OEM Part No.	Filter	Shop Pack	Clamshell
Briggs & Stratton			
398825	30-104	30-811	
491519	30-107	30-827	
494511	30-735	30-826	
691667	30-048	30-820	
693083	30-074	30-829	
697029	30-033	30-824	
698369	30-919		
270579	30-907		
272235	30-917		
27987	30-906		
393957S	30-044	30-825	
394018S	30-101	30-809	
397795S	30-700	30-813	
491588S	30-710	30-800	69-036
496894S	30-049	30-803	
497725S	30-029	30-821	
499486S	30-032	30-823	
Echo			
130310-51830	30-121	30-831	
130310-54130	30-119	30-830	
Honda			
17210-ZE0-822	30-318	30-816	
17210-ZE1-821	30-404	30-802	69-023
17210-ZE2-822	30-406	30-805	69-030
17210-ZE3-010	30-417	30-806	69-007
17210-ZE6-003	30-400	30-808	
17211-ZE7-W03	30-015	30-843	
17211-ZE8-000	30-347	30-832	69-347
17211-ZG9-800	30-027		
17211-ZG9-M00	30-709	30-828	
Kawasaki			
11013-2021	30-303	30-810	69-032
11013-2120	30-309	30-814	
11013-2210	30-311	30-804	69-031
11013-7002	30-322	30-835	69-322
11013-7010	30-054	30-833	

OEM Part No.	Filter	Shop Pack	Clamshell
Kohler			
235116	30-080	30-819	
12-083-05	30-085	30-815	
12-083-10-S1	30-088	30-834	
24-083-03	30-089	30-844	
25-083-01s	30-055	30-845	
25-083-04	30-056	30-849	
25-833-01	30-082	30-847	
45-083-02	30-093	30-812	
47-083-01	30-098	30-848	
47-083-03	30-095	30-818	69-395
Onan			
140-1228	30-430	30-846	
Stihl			
4203-141-0300	30-416	30-837	
4223-140-1800	55-244	30-838	
4223-141-0300	55-249	30-839	
Tecumseh			
30727	30-070	30-822	
32972	30-091		
33268	30-100	30-841	
35066	30-301	30-801	69-034
35403	30-111	30-842	
36046	30-740	30-807	
36356	30-024	30-850	
36745	30-030	30-840	
36905	30-031	30-817	69-331

OREGON	Replaces	Description	Product Code

Briggs & Stratton Paper Filters

30-097	390492	**Air Filter** Fits model series 80200, 81200, 100200, 130200, 130900, 143400, 146400, 147400, 170400, 171400, & 190400 OD: 3-3/16", ID: 1-3/8", height: 2-13/16"	
30-022	392286	**Air Filter** Fits model series 251400, 252400, 253400, & 255400 series OD: 5", ID: 3-1/2", height: 2-11/32"	
30-132	392308 392308S	**Air Filter** Fits model series 60100, 61100, 80200, 80300, 80400, 81200, 81300, 81400, & 92900 Height: 2-3/4", diameter: 2-3/4", ID both ends: 1-3/16" Use with Oregon® 30-923 foam pre-cleaner	
30-106	393406	**Air Filter** Fits model series 170700, 190700, 191700, 192700, & 193700, & John Deere 108, R72, & S82 Length: 5-1/4", width: 3-1/8", height: 2-1/8"	
30-105	393725	**Air Filter** Fits model series 220700, 251700, 252700, 253700, & 256700 Use on John Deere 111, 111H, & S92 Length: 5-3/16", width: 3", height: 2-1/2"	
30-044	393957 393957S 390930 Ariens 24519	**Air Filter** Fits model series 170400, 171400, 190400, 194400, 195400, 221400, 233400, 243400, 252400, 253700, 254400, 290400, 294400, 295400, 300400, 303400, 305400, 320400, 325400, 326400, 350400, & 356400 OD: 4-1/4", ID: 2", height: 3-13/16" Use with Oregon 30-920 foam pre-cleaner	
30-825	4106	**SHOP PACK** - (5) of 30-044	
30-101	392642 394018 394018S	**Air Filter** Fits model series 401400, 402400, 421400, & 422400 OD: 7-1/8", ID: 5-1/2", height: 2-1/4" Use with Oregon 30-929 foam pre-cleaner	
30-809	4135	**SHOP PACK** - (5) of 30-101	

A

Air Filters

OREGON	Replaces	Description	Product Code	

Briggs & Stratton Paper Filters

30-104	394019 394019S 398825	**Air Filter** Fits model series 400700, 401700, 404700, 402700, 421700, 422700, 42A700, 42B700, 42D900, 42E700, 460700, & 463700 Length: 9-5/8", width: 4-1/4", height: 2-1/2" Use with Oregon® 30-929 foam pre-cleaner	
30-811	4136	**SHOP PACK** - (5) of 30-104	
30-094	396424 396424S 4137	**Air Filter** Fits model series 60100, 80200, 80300, 80400, 81200, 81300, 82200, 82300, 82400, 91200, 92500, 92900, 110900, 111700, 112200, 114700, 114900, 130200, 130400, 130900, 131200, 131400, 131900, 132200, 132400, 132900, & 135200 OD: 2-3/4", bottom ID: 1-1/4", top ID: 1/4", height: 2-13/16" Use with Oregon 30-923 foam pre-cleaner	
30-700	397795 397795S John Deere PT 11025 John Deere PT 15853	**Air Filter** For model series 90700, 91700, 95700, 96700, 110700, 114700, & 131700 Length: 6-1/2", width: 4-1/2", height: 3/4", Blue Seal Use with Oregon 30-038 foam pre-cleaner	
30-813		**SHOP PACK** - (5) of 30-700	
30-107	491519 399806 399806S	**Air Filter** Fits model series 253700, 256700, 280700, & 281700 Length: 8-5/8", width: 2.635", height: 2.7" Use with Oregon 30-924 foam pre-cleaner	
30-827	4138	**SHOP PACK** - (5) of 30-107	
30-720	399877 399877S	**Air Filter** Fits model series 100700 Length: 4-5/8", width: 4-5/8", height: 13/16" Blue seal	
30-108	399968	**Air Filter** Fits model series 170400, 190400, 195400, & 254400 Mounting holes centered Length: 8-3/4", width: 3", height: 2-1/2" Use with Oregon 30-447 foam pre-cleaner	
30-134	491021	**Air Filter** Fits model series 260700 & 261700 Metal cap Length: 6-3/4", width: 3", height: 3-1/8" Use with Oregon 30-444 form pre-cleaner	
30-731	491384	**Air Filter** Fits model series 161400 Length: 7", width: 3-1/2", height: 1-1/2" Use with Oregon 30-928 foam pre-cleaner	

A

OREGON	Replaces	Description	Product Code

Briggs & Stratton Paper Filters

30-710	491588 491588S 399959	**Air Filter** Fits model series 80200, 82200, 83400, 86400, 90200, 91200, 92200, 93200, 94200, 92500, 11A600, 11C600,120200, 120300, 120400, 120600, 120H600, 120K00, 121000, 121100, 121200, 121300, 121400, 121700, 121800, 121A00, 121H00, 121K00, 122000, 122200, 122300, 122400, 122700, 12280, 122H00, 122K00, 122L00, 122M00, 122T00, 123700, 123800, 123H00, 123K00, 124300, 124400, 124600, 124700, 124800, 124H00, 124K00, 124L00, 124T00, 125600, 125700, 125H00, 125K00, 126300, 126400, 126700, 126800, 126K00, 126L00, 126M00, 126T00, 127300, 127400, 127600, 127700, 127800, 127H00, 128700, 128800, 128H00, 128L00, 128M00, 128T00, 129700, 129800, 129H00, 12A800, 12B600, 12B800, 12C600, 12C800, 12D600, 12E600, 12E700, 12E800, 12F600, 12F700, 12F800, 12G700, 12G800, 12H100, 12H200, 12H300, 12H700, 12H800, 12J600, 12J700, 12J800, 12J900, 12L200, 12L300, 12L800, 12L900, 12P800, 12Q500, 12Q800, 12R500, 12S100, 12S400, 12S500, 12S700, 12S800, 12T100, 12T200, 12T400, 12T700, 12T800, 12X800, 12Y800, 12Z800, 130200, 133200, 133700, 134200, 135200, 135700, 136200, 137200, 138400, 150100, 150200, 150300, 157100, 157200, 15T100, 15T200, 185400, 19L200, 19N100, 201300, 201400, 202300, 202400, 204300, 204400, 205300, 205400, 20H100, 20H200, 20L100, 20L200, 20S100, 20S200, 20T200, 210300, 210400, 212300, 212400, 213400, 216100, 216300, 217300, 21S100, 21S200, 21T100, 21T200, 250000, 25N100, 25P100, & 25T200 Length: 5-1/4", width: 4-1/2", height: 13/16", blue seal Use with Oregon® 30-927 foam pre-cleaner (horizontal engines) & Oregon 30-961 (vertical engines)	
30-800		**Shop Pack** - (5) of 30-710	
69-036		**Blister Pack** - (1) of 30-710	
30-735	494511 494511S	**Air Filter** Fits model series 91400, 93400, 9k400, 115400, 134400, 135400 Length: 7", width: 3-1/2", height: 1-1/8" Use with Oregon 30-928 foam pre-cleaner	
30-826	4145	**Shop Pack**- 5 of 30-735	
30-049	493909 496894 496894S	**Air Filter** Fits model series 282700, 283700, 284700, 285700, 286700, 287700, 288700, 289700,28F700, 28M700, 28N700 28P700, 28Q700, 28R700, 28S700, 28T700, 28U700, 28V700, 28W700, 310700, 311700, 312700, & 313700 Length: 7-1/4", width: 2-7/8", height: 3" Use with Oregon 30-925 foam pre-cleaner	
30-803	4139	**Shop Pack** - (5) of 30-049	
30-029	497725 497725S 494586	**Air Filter** Fits model series 123J00, 12U800, 12V800, & 12W800 Length: 4", width: 2-1/2", height: 2-1/4" Use with Oregon 30-930 foam pre-cleaner	
30-821	4197	**Shop Pack** - (5) of 30-029	

A

Air Filters

OREGON	Replaces	Description	Product Code

Briggs & Stratton Paper Filters

30-032	499486 499486S 698754 695667	**Air Filter** Fits model series 40F700, 40G700, 40H700, 401500, 404500, 405500, 405700, 406500, 406700, 407500, 407600, 407700, 441500, 441600, 441700, 44550, 445600, 445700, 445800, 446700, 446800, & 446900 Length: 7-1/4", width: 4-5/16", height: 1-1/2" Use with Oregon® 30-914 foam pre-cleaner	
30-823		**Shop Pack** - (5) of 30-032	
30-136		**Air Filter** Washable version of 30-032 Use with Oregon 30-914 foam pre-cleaner	
30-028	496077 691643	**Air Filter** Fits model series 176400, 192400, 196400, 197400, 19A400, 19B400, 19E400, 19F400, 19G400, 19K400, 226400, 250400, 26400, & 257400 Length: 7", width: 3.5", height: 1.5" Use with Oregon 30-928 foam pre-cleaner	
30-048	493910 691667	**Air Filter** Fits model series 194700, 195700, 196700, 197700, 198700, 28A700, 28B700, 28D700, 257700, & 259700 Length: 7-1/4", width: 2-7/8", height: 2-3/8" Use with Oregon 30-926 foam pre-cleaner	
30-820		**Shop Pack** - (5) of 30-048	
30-039	692446 4224	**Air Filter** Fits 123600 & 126672 series Length: 3-7/8", width: 2-1/2", height: 3" Use with Oregon 30-915 foam pre-cleaner	
30-087	692519	**Air Filter** Fits model series 356400, 358700, 380400, 380700, 381400, 381700, 385400, 385700, 385800, 386400, 386700, 540400, 541400, 542400, 543400, 543700, 61E400, 61E900, 611400, 613400, & 613700 OD: 7-3/4", ID: 5-9/16", height: 2-1/4" Use with Oregon 30-974 foam pre-cleaner	
30-135	695302	**Air Filter** Fits model series 20S200, 202300, 202400, 203400, 204300, 205300, 205400, 206400, 21S200, 212300, & 213400 Length: 4-3/4", width: 3-1/4", height: 4" Use with Oregon 30-976 pre-filter	

A

OREGON	Replaces	Description	Product Code

Briggs & Stratton Paper Filters

30-033	690610 498596 697029 498569S	**Air Filter** Fits model series 111600, 113400, 12H600, 12K600, 12Q500, 12R500, 12R600,12S400,12S500,12S600, 12S700, 12T100 12T400, 120200, 120300, 120410, 121000, 121200, 121300, 121400, 121600, 122000, 122300, 122600, 123300, 123400, 126300, 126400, 126600, 127300, 127400 Length: 3-15/16", width: 2-1/2", height: 3" Use with Oregon® 30-915 foam pre-cleaner	
30-824		**Shop Pack** - (5) of 30-033	
30-074	698083 697634 697014 795115 797008 794422	**Air Filter** Fits model series 280H00, 280J00, 281H00, 282H00, 283H00, 284H00, 285H00, 286H00, 31A500, 31A600, 31A700, 31B700, 31C700, 31D700, 31E500, 31E600, 31E700, 31F700, 31G700, 31H700, 31M900, 31N600, 31N700, 31P600, 31P700, 31P800, 31P900, & 31Q700 Length: 9", width: 3-1/8", height: 1-1/2" Use with Oregon 30-076 foam pre-cleaner	
30-829		**Shop Pack** - (5) of 30-074	
30-122	697153 697776	**Air Filter** Washable version of Oregon 30-074 Use with Oregon 30-076 foam pre-cleaner	
30-073	698413 697152 797007 794421	**Air Filter** Fits model series 21A800, 21A900, 21B700, 21B800, 21B900, 210700, 212700, 212900, 214700, 215700, 215800, 215900, 216900, 217700, 217900, 218700, 218800, 219700, & 219900 Length: 7-1/4", width: 3-1/8", height: 1-1/2" Use with Oregon 30-077 foam pre-cleaner	
30-761	710265	**Air Filter** Fits model series 85400 Length: 6-1/4", width: 3-1/2", height: 7/8" Blue seal	
30-762	710266	**Air Filter** Fits model series 185400, 235400, & 254400 Blue seal Length: 8-3/8", width: 4", height: 1-1/8" Use with Oregon 30-962 pre-cleaner	
30-123	790166	**Air Filter** Fits model series 93300, 94000, 94300, 95300, 95400, 96300, 97300, & 97400 Length: 2-7/8", width: 2", height: 2-1/8"	
30-139	792101 John Deere MIU11286	**Air Filter** Fits model series 40G700, 401500, 405500, 406700, 407700, 445500, 441500, 441600, 441700, 445700, & 445800 Length: 7-1/2", width: 4-1/2", height: 2" Use with Oregon 30-914 pre-cleaner	

A

Air Filters

OREGON	Replaces	Description	Product Code

Briggs & Stratton Paper Filters

30-145	792105 4233	**Air Filter** Fits model series 40G700, 40H700, 40S800, 407700, 44H700, 44K700, 44L700, 44M700, 44N700, 44P700, 44Q700, 44S500, 44S700, 44S800, 44S900, 49M700, 49M800, 49S800, & 49T700 Length: 5", width: 3-1/8", height: 4-7/8" Use with Oregon 30-975 pre-filter	
30-161	792038	**Air Filter** Fits model series 90600, 100600, & 100800 Length: 4-3/4", width: 3", height: 2-1/4" Use with Oregon 30-446 foam pre-cleaner	
30-167	793569	**Air Filter** Fits model series 31E800, 31L700, 31M900, 31Q600, 31Q700, 31S700, 31S800, 31S900, 33M600, 33M700, 33M900, 33F700, 33R800, 33S800, 331700, 331800, 331900 OD: 3", ID: 1-1/2", height: 5-3/4" Use with Oregon® 30-448 foam pre-cleaner	
30-172	795066	**Air Filter** Fits model series 110P00, 111P00, 112P00, 114P00, 121Q00, 121R00, 121S00, 122Q00, 122R00, 122S00, 124Q00, 124S00, 12Q900, 12R900, 12S900, 14B900 Length: 5-1/2", width: 2-3/4", height: 2-1/4" Use with Oregon 30-181 pre-filter	
30-851	796031 591334 594201	**Air Filter** Fits model series 31A500, 31A600, 31A700, 31C700, 31E500, 31E600, 31E700, 31G700, 31N600, 31N700, 31P60031P700, 31Q500, 31R500, 31R600, 31R700, 31R800, 31R900, 401500, 405500, 406700, 407700, 40N700, 40N800, 40R500, 40R600, 40R700, 40R800, 445600, 44N600, 44N800, 44R500, 44R600, 44R700, & 44R800 OD: 3", ID: 1-1/2", height: 5"	
30-852	796032	**Air Filter** Fits model series 21D800 & 215800 OD: 3", ID: 1-1/2", height: 4"	
30-173	797033	**Air Filter** Fits model series 13H100, 13H300, 13L100, & 13L300 Length: 5-1/2", width: 2-3/4, height: 2-3/8"	
30-186	797819	**Air Filter** Fits model series 10T800 OD: 3", ID: 1-1/2" (seal end) & 1-5/16" (top), height: 1-3/4"	

A

OREGON	Replaces	Description	Product Code

Briggs & Stratton Paper Filters

30-168	798452 593260	**Air Filter** Fits model series 93J00, 9P700, 103M00, & 104M00 Length: 4-3/8", width: 2-5/8", height: 1-1/4"	
30-182	798897	**Air Filter** Fits model series 44L900, 44M900, 44P900, 44Q900, 44T600, 44T700, 44T800, 44T900, 49L900, 49M900, & 49T800 OD: 4", ID: 2", height: 4-3/4"	
30-736	805113	**Air Filter** Fits model series 294400, 294700, 303400, 303700, & 350700 Length: 7", width: 6-1/4", height: 5/8" Use with Oregon® 30-450 foam pre-cleaner	
30-075	820263 4234	**Air Filter** Fits model series 356400, 358700, 385400, 385700, 386400, 386700, 433400, 473100, 474100, 58A400, 582400, & 588400 OD: 3-1/2", height: 7-3/8"	
30-702	73111GS	**Air Filter** Fits 6500GX generator sets Length: 5-1/4", width: 4-1/2", height: 1-1/4"	

Briggs & Stratton Foam Filters

30-906	27987 27987S	**Foam Air Filter** Fits model series 60000, 80000, 100200, 11200, & 130200 Length: 5-5/8", width: 4-1/2", height: 1-1/2" Pre-oiled foam air filter	
30-913	270067	**Foam Air Filter** Fits model series 100900 Length: 5-3/4", width: 3-3/4", height: 1-1/2" Pre-oiled foam air filter	
30-916	270093	**Air Filter** Fits model series 146400, 170400, 190400, 191400, 193400, 200400, 231400, 233400, 243400, & 300400 OD: 4-3/4", ID: 1-1/2", height: 3-1/4" Pre-oiled foam air filter	
30-908	270251	**Foam Air Filter** Fits model series 82000, 92500, & 92900 engines with a manual choke (1968 & earlier) Length: 6", width: 3-5/8", height: 1-1/2" Pre-oiled foam air filter	

A

Air Filters

Briggs & Stratton Foam Filters

OREGON	Replaces	Description	Product Code
30-910	270447	**Foam Air Filter** Fits model series 130900 Length: 4-7/8", width: 4-1/4", height: 1-1/2" Pre-oiled foam air filter	
30-909	270528 270528S 4133	**Foam Air Filter** Fits model series 146700, 147700, 170700, 171700, 190700, 191700, & 193700 Length: 8-5/8", width: 4-3/8", height: 1-1/2" Pre-oiled foam air filter	
30-907	270579 270579S	**Foam Air Filter** Fits model series 82500, 92500, 92900, & 93500 engines with automatic chokes (1991 & earlier) Length: 5-3/8", width: 3-7/8", height: 1-1/2" Pre-oiled foam air filter	
30-903	270848	**Foam Air Filter** Fits model series 110900, 111900, 113900, & 114900 Length: 5-3/8", width: 4-1/8", height: 1-1/2" Pre-oiled foam air filter	
30-923	271466 270979	**Foam Pre-Cleaner** Use with Oregon® 30-094 & 30-132 Pre-oiled foam pre-cleaner	
30-920	270782 271794 271794S Ariens 24518	**Foam Pre-Cleaner** Length: 7-1/4", width: 3-3/4" Use with Oregon 30-044 Pre-oiled foam pre-cleaner	
30-447	271939	**Foam Pre-Cleaner** Length: 9", width: 2-5/16" Use with Oregon 30-108 Pre-oiled foam pre-cleaner	
30-924	271962 271962S 4110	**Foam Pre-Cleaner** Length: 7-3/4", width: 2-3/4" Use with Oregon 30-107 Pre-oiled foam pre-cleaner	
30-184	272218 493206	**Foam Pre-Filter** Length: 6-1/4", width: 2-3/4" Use with Briggs & Stratton 491950 Pre-oiled foam pre-cleaner	
30-917	272235 272235S	**Foam Air Filter** Fits model series 9B900, 9C900, 9D900, 90100, 92500, 92900, 93900, 95900, 96500, 96900, 98900, 10A900, 10B900, 10C900 10D900, 10E900, & 10F900 Length: 5-7/8", width: 3-3/4", height: 1-1/4" Pre-oiled foam air filter	

OREGON	Replaces	Description	Product Code

Briggs & Stratton Foam Filters

30-925	272403 272403S	**Foam Pre-Cleaner** Length: 7", width: 3" Use with Oregon 30-049 Pre-oiled foam pre-cleaner	
30-444	272444	**Foam Pre-Cleaner** Length: 6-5/8", width: 3" Use with Oregon 30-134 Pre-oiled foam pre-cleaner	
30-926	272477S 272477	**Foam Pre-Cleaner** Length: 7", height: 2-3/8" Use with Oregon® 30-048 Pre-oiled foam pre-cleaner	
30-929	271271 271271S 272490 272490S	**Air Filter** Length: 10-3/4", width: 2-5/8" Use with Oregon 30-101 Pre-oiled foam pre-cleaner	
30-960	272922 272405	**Air Filter** Fits model series 194700, 195700, 196700, 254700, 257700, & 258700 Length: 7-3/4", width: 2-5/16", height: 1-5/64" Pre-oiled foam air filter	
30-930	272533 273185 273185S	**Foam Pre-Cleaner** Use with Oregon 30-047 & 30-029 Pre-oiled foam pre-cleaner	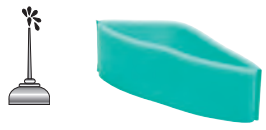
30-915	273356 273356S	**Foam Pre-Cleaner** Use with Oregon 30-033 or 30-039 Pre-oiled foam pre-cleaner	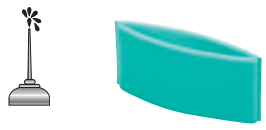
30-914	273638S 273638	**Pre-Cleaner** Length: 6-3/4", width: 3-3/4", height: 1/4" Use with Oregon 30-032 Pre-oiled foam pre-cleaner	
30-038	399039	**Pre-Cleaner** Use with Oregon 30-700 Length: 6", width: 4-1/16"	
30-927	491435 491435S 271933	**Pre-Cleaner** Length: 4-7/8", width: 4-1/4", height: 5/16" Use with Oregon 30-710 Pre-oiled foam pre-cleaner	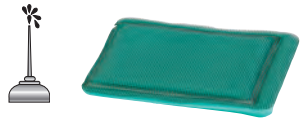
30-961	493537 493537S	**Foam Pre-Cleaner** Use with Oregon 30-710 Pre-oiled foam pre-cleaner	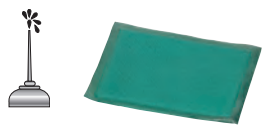

A

Air Filters

OREGON	Replaces	Description	Product Code

Briggs & Stratton Foam Filters

30-974	692520	**Foam Pre-Cleaner** Use with Oregon 30-087 Pre-oiled foam pre-cleaner	
30-076	697015	**Foam Pre-Cleaner** Use with Oregon 30-074 Pre-oiled foam pre-cleaner	
30-077	697292	**Foam Pre-Cleaner** Use with Oregon® 30-073 Pre-oiled foam pre-cleaner	
30-919	698369	**Air Filter** Fits model series 98900, 9B900, 9C900, 9D900, 9E900, 9F900, 9G900, 9H900, 9J900, 9K900, 9L500, 9L600, 9L700, 9L900, 9M900, 9S500, 9T500, 9T600, 9T700, 10A900, 10B900, 10D900, 10E900, 10F900, 10G900, 10H900, 10J900, 10K900, 10L500, 10L600, 10L800, 10L900, 10M900, 10N900, 10S900, 10T500, 10T600, 10T700, & 10T800 Length: 5-1/8", width: 2-7/8", height: 1-1/4" Pre-oiled foam air filter	
30-962	710268	**Foam Pre-Cleaner** Use with Oregon 30-762 Pre-oiled foam pre-cleaner	
30-975	792303	**Foam Pre-Cleaner** Use with Oregon 30-145 Pre-oiled foam pre-cleaner	
30-446	793676	**Foam Pre-Cleaner** Length: 5-1/4", width: 1-5/8" Use with Oregon 30-161 Pre-oiled foam pre-cleaner	
30-448	793685	**Foam Pre-Cleaner** Length: 4-1/2", width: 4-7/8" Use with Oregon 30-167 Pre-oiled foam pre-cleaner	
30-449	794071	**Foam Air Filter** Fits model series 120T00 Length: 4-1/2", width: 4", height: 1-1/4" Pre-oiled foam air filter	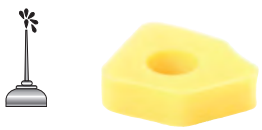
30-208	4216 5088 5088H 5088K 5099 698369 Craftsman SPA8S1062853001	**Foam Air Filter** – NEW Fits Briggs & Stratton 9B902, 98902, 98982, 10A902, 10B902 and 10A982 Length: 5-1/8", width: 2-7/8", height:1-1/4"	

A

OREGON	Replaces	Description	Product Code

Briggs & Stratton Foam Filters

30-210	595191	**Foam Pre-Filter** – NEW Use with Oregon 30-168 Air Filter Length: 5", width: 1"	
30-181	796254	**Foam Pre-Filter** Length: 6-1/4", width: 1-3/4" Use with Briggs and Stratton 795066 Pre-oiled foam pre-cleaner	
30-445	797704	**Foam Pre-Cleaner** Length: 4-1/2", width: 4" Use with Briggs and Stratton 594201 Pre-oiled foam pre-cleaner	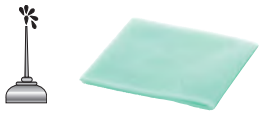
30-183	799579	**Foam Air Filter** Fits model series 8P500, 9P600, 9P700, & 93J00 Length: 4-1/4", width: 3-1/4", height: 7/8" Pre-oiled foam air filter	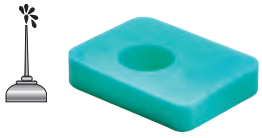
30-450	805267	**Foam Pre-Cleaner** Length: 6-3/4", width: 6", height: 1/4" Use with Oregon 30-736 Pre-oiled foam pre-cleaner	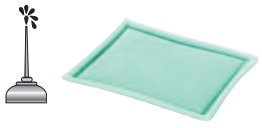

Echo

30-618	130310-39730	**Air Filter** - NEW Fits Echo CS3500, CS4200, & CS420 Height: 2-11/50", outer diameter: 2-1/2", inner diameter: 1-3/4"	
30-621	A226-000291	**Air Filter** - NEW Echo CS350TES Length: 3-3/4", width: 3"	
30-625	130310-38331	**Air Filter** - NEW Fits Echo CS440, CS4400, CS450, CS510, CS520, & CS530 Height: 1-3/8", outer diameter: 2-1/2", inner diameter: 1-3/4"	
30-620	P021-016371	**Air Filter** - NEW Fits Echo CS600 Length: 3-5/8", width: 3-1/8", height: 1"	

A

Air Filters

OREGON	Replaces	Description	Product Code	
Echo				
30-619	A226-000070	**Air Filter** - NEW Fits Echo CS6702 & CS680S Height: 1-3/5", OD: 3-1/10", ID: 2-2/5"		
30-624	A226000350 A226000351 A226000470 A226000471 A226000472	**Air Filter** - NEW Fits Echo PB251, PB255, PB265, PE280, SRM266, & SRM280 Length: 3-1/8", width: 3-1/8", height: 3/8", inner diameter: 3/8"		
30-616	13030508360 13030508361	**Air Filter** - NEW Fits Echo PB60H, PB460, PB600, PB601, PB750 & PB755 series blowers; Shindaiwa EB633 Length: 10-3/8", width: 2-7/8", height: 1-11/32"		
30-617	A226000031 A226000032	**Air Filter** - NEW Fits Echo 400, 500, 600, & 700 series backpack blowers Length: 4-5/32", width: 2-5/8", height: 1-3/8"		
30-439-1	A226000031	**Air Filter** Fits PB603, PB413, & PB650 blowers Length: 4-3/32", width: 2-5/8", height: 1-3/8"		
55-201	130305-08360	**Air Filter** Fits PB4600-059919 & up, PB6000 Blower, PB 60-HT-Type 1E, PB4600 Type-1E, & PB46HT-Type 1E Length: 10-3/8", width: 2-7/8", height: 1-11/32"		
30-003	130310-04560	**Air Filter** Fits model 2400 hedge clipper, ES1100-001001 to 025416, LHB 2100, PB1000, & PB1010 backpack blowers Length: 2-3/4", width: 2-5/8", hole diameter: 5/16"		
30-009	130310-51730	**Air Filter** Fits SRM2500 trimmer Length: 3-1/4", width: 3-1/4", hole diameter: 5/16"		
30-121	130310-51830	**Air Filter** Fits SRM2400/SB, SRM2400, SRM2601, SRM3110, SRM3400, SRM3800, & SRM3100/SB trimmers, PB2400 & PB24LM blowers, SHC2400 & HCA2400 hedge clippers, & STS2400 pole pruner Also fits models PAS2400, PE2400, & PE2601 Length: 3-1/8", width: 3-1/8", hole diameter: 1/4"		
30-831		**Shop Pack** - (5) of 30-121		

A

OREGON	Replaces	Description	Product Code

Echo

30-119	130310-54130 A226000472	**Air Filter** Fits GT2000/SB, GT2400, SRM2400/SB, & SRM2110 model trimmers, PB2100 blower, ES2100, ES2000, & ES2400 vacuums, FHC1700 & 2100 hedge clippers, SHC1500, 1600, 2000, & 2400 Length: 2-5/8", width: 2-5/8", hole diameter: 1/4"	
30-830		**Shop Pack** - (5) of 30-119	
30-931	130317-00760 John Deere PT8376	**Foam Air Filter** Fits Echo PB400E, John Deere 4 & 4 E, & Toro 40cc blowers For backpack blowers Length: 7" Use with heavy-duty filter kit Pre-oiled foam air filter	
55-227	130310-03360 John Deere PT10281	**Air Filter** Fits PB210E For John Deere blower 2E Felt with rubber seal Length: 4", width: 2-7/8"	

Exmark

30-655	127-9252 Toro 127-9252	**Air Filter –** NEW Toro Timecutter with 42 & 50 decks and V-Twin engines Length: 6-1/8", width: 3", height: 3-3/16"	
30-656	116-0164 Toro 117-0390	**Air Filter, Hydro –** NEW Fits Exmark Lazer Z S series with 48 & 60 deck, Lazer Z E series with 60 deck, Lazer Z X series with 60 & 72 deck, and Quest with 52 deck; Toro Commercial Z Master G3 74901, 74926, 74937, 74943CP, 74951, 74956CP, 74977, & 74956 Height: 4-1/2", outer diameter: 2-1/2"	

Homelite

55-207	A65178 69681	**Felt Air Filter** Fits model EZ-Automatic & EZ Length: 4", width: 2-7/8"	
55-211	63589-A 587741	**Felt Air Filter** Fits SXL, XL12, XL15, XL400, & XL500, SXLAO, & XLSI.54A pump Length: 4", width: 3-1/2"	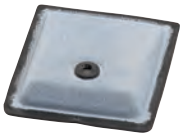
55-610	69141 D92702B A24779	**Foam Air Filter** Fits Super 2, XL2, XL, CSB3012, LX30 Bandit, & UT10618A Diameter: 1-7/8", thickness: 1/2" Pre-oiled foam air filter	

A

Air Filters

OREGON	Replaces	Description	Product Code

Homelite

55-611	D98760 D98760B	**Foam Air Filter** Fits ST145, 155, 175, 185, 285, 385, & 485 trimmers, HB100, & 180 blower Length: 1-3/4", width: 1-1/2", height: 3/8" Pre-oiled foam air filter	

Honda Paper Filters

30-206	17211-Z8B-901 17211-ZL8-003 17211-ZL8-023	**Air Filter** – NEW Fits: GC135, GCV135, GC160, GCV160, GC190, GCV160, GS190, & GSV190 Length: 5", width: 4-1/2", height 1"	
30-613	17211-Z8B-901	**Air Filter** – NEW Fits: GC135, GCV135, GC160, GCV160, GC190, GCV160, GS190, & GSV190 Length: 5", width: 4-1/2", height: 1"	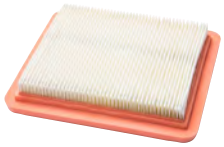
30-437	17010-ZJ1-000 Code 4956579 17211-ZJ1-000	**Air Filter** Fits GX610, GX620, GXV610, & GXV620 Old style Length: 9-1/2", width: 7-1/4", height: 1-1/4"	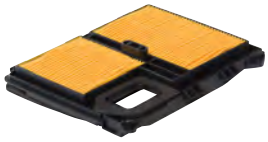
30-703	17210-759-013	**Air Filter** Fits GX610, GX620, GX670, & GXV670 with remote mount air cleaner assembly Height: 8", OD: 3-5/8", ID: 2" Base OD: 4-1/8", Seal OD: 3-1/8"	
30-403	17210-890-505 Code 5311089 17211-890-003 Code 2893931 17211-890-013 Code 1021518	**Air Filter with Foam Pre-Cleaner** Fits G300, G400, 5500, & 6500 generators, & 3810 tractor OD: 3-7/8" (top) & 5-3/8" (bottom), height: 2-7/8"	
30-187	17210-Z1V-003	**Air Filter** Fits GXV140 & GXV160 engines Length: 7-1/2", width: 2-1/2", height: 2"	
30-404	17210-ZE1-822 Code 2893881 17210-ZE1-505 Code 5247408 17210-ZE1-820 Code 1445782 17210-ZE1-517	**Air Filter with Foam Pre-Cleaner** Fits GX140, GX160, & GX200 For 5 HP horizontal engines Length: 4", width: 2-7/8", height: 2-5/8" Includes Oregon® 30-506 foam pre-cleaner	
30-802		**Shop Pack** - (5) of 30-404	
69-023		**Blister Pack** - (1) of 30-404	

A

Honda Paper Filters

OREGON	Replaces	Description	Product Code
30-406	17210-ZE2-505 Code 5266721 17210-ZE2-515 17210-ZE2-821 Code 2893899 17210-ZE2-822	**Air Filter** Fits GX240, GX240K1, & GX270 For 8 HP horizontal engines Length: 4", width: 3-9/16", height: 3-1/16" Includes Oregon 30-934 foam pre-cleaner	
30-805		**Shop Pack** - (5) of 30-406	
69-030		**Blister Pack** - (1) of 30-406	
30-417	17210-ZE3-505 Code 5252697 17210-ZE3-010 Code 2893907	**Air Filter with Foam Pre-filter** Fits GX240, 270, 340, & 390 For 8–13 HP engines Length: 4-3/8", width: 3-3/4", height: 3-5/8" Use with Oregon 30-454 foam pre-cleaner	
30-806		**Shop Pack** - (5) of 30-417	
69-007		**Blister Pack** - (1) of 30-417	
30-400	17210-ZE6-505 Code 5185855 17210-ZE6-003 Code 1495902 17211-888-013 Code 1007483	**Air Filter with Foam Pre-Cleaner** Fits GV150, GV200, GVX120, GVX1210, HR195, & HRA214, HR214, HR194, HR195, & HRA214 mowers For 3-1/2, 4, & 5 HP engines Length: 7-9/16", width: 2-1/2", height: 2" Includes Oregon 30-933 foam pre-cleaner	
30-808		**Shop Pack** - (5) of 30-400	
30-401	17210-ZE7-505 Code 5310289 17210-ZE7-013 Code 2741627 17210-ZE7-003 Code 2289734	**Air Filter with Foam Pre-Cleaner** Fits models GVX140, 120, & 160, & commercial mowers HR216 & HRA216 For 4 & 5 HP vertical engines Length: 7-9/16", width: 2-1/2", height: 1-7/8"; metal top Includes Oregon 30-933 foam pre-cleaner	
30-405	17210-ZE8-003 Code 2090207 17210-ZE8-013 Code 2910727 17210-ZF5-505 Code 5248299	**Air Filter with Foam Pre-Cleaner** Fits GXV270, 340, & 390 For 8.5 & 11 HP OHV & 11 & 13 HP vertical engines Length: 5-1/8", width: 2-5/8", height: 3-1/8" Includes Oregon 30-507 foam pre-cleaner	
30-318	17210-ZE0-505 Code 5273032 17210-ZE0-822 Code 2893873 17210-ZE8-820 Code 1488790	**Air Filter with Foam Pre-Cleaner** Fits GX110, GX120KI, 4 HP, & series 400 & 401K Length: 4", width: 2-7/8", height: 2-1/16" Use with Oregon® 30-453 foam pre-cleaner	
30-816		**Shop Pack** - (5) of 30-318	

Air Filters

OREGON	Replaces	Description	Product Code

Honda Paper Filters

30-436	17210-ZJ1-842 Code 7120397 17210-ZJ1-841	**Air Filter** Fits new style GX610KS, GX620K1, & GX670 models For 20 HP engines Length: 6-3/4", width: 8-3/4", height: 1-1/4" Use with Oregon 30-455 foam pre-cleaner	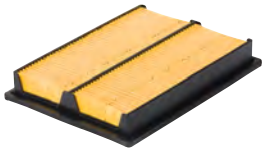
30-704	17211-ZOA-013 17211-ZE1-003	**Air Filter** Fits GCV530 & GXV530 Length: 8-5/8", width: 4-5/8", height: 1" Use with Oregon 30-451 foam pre-cleaner	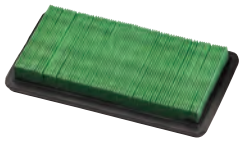
30-317	17210-ZA0-506 Code 5168273 17211-ZA0-702 Code 2893923	**Air Filter with Foam Pre-Cleaner** Fits HT3813 & 4213 tractors, GX360K1 series engines Length: 6-1/2", width: 4-1/8", height: 1-7/8"	
30-015	17211-ZE7-W03 17211-ZE7-W02 17211-ZE7-W01 Code 5357399	**Air Filter - Metal Top** Fits GXV160, HPC216K1HA, & HRC216K For 5.5 HP vertical shaft engines Length: 6-3/4", width: 2-1/4", height: 2" Includes foam pre-cleaner	
30-843		**Shop Pack**- 5 of 30-015	
30-064	17211-ZF5-V01 Code 5753595	**Air Filter with Foam Pre-filter** Fits GXV340K2 & GXV390K1 For 11 & 13 HP Length: 4-7/8", width: 2-3/8", height: 3-1/2"	
30-027	17211-ZG9-800 Code 4327383	**Air Filter** For Harmony walk-behind mowers Length: 5-1/16", width: 2-5/16", height: 7/8" Use with Oregon 30-452 foam pre-cleaner	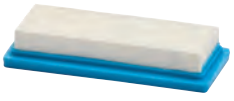
30-709	17211-ZG9-M00 Code 4010062	**Air Filter** For SX series, Harmony 215, & Model HRM215 Length: 5-3/4", width: 3-1/2", height: 7/8" Use with Oregon 30-932 foam pre-cleaner	
30-828		**Shop Pack** - (5) of 30-709	
30-347	17211-ZE8-000 17211-ZL8-003 17211-ZL8-003 17211-ZL8-023	**Air Filter** Fits models GC135, GCV135, GC160, HRR216, HRT216, & GXV57 For walk-behind mowers Green paper with black urethane seal Length: 5-1/4", width: 4-1/2", height: 3/4"	
30-832		**Shop Pack** - (5) of 30-347	
69-347		**Blister Pack** - (1) of 30-347	

A

Honda Foam Filters

OREGON	Replaces	Description	Product Code
30-612	17211-Z0H-000	**Foam Air Filter** – NEW Fits HHT25, GX25, & WX10K1 Engines Length: 3", width: 2-1/2", height: 1-3/8"	
30-963	17211-899-000	**Foam Air Filter** Fits many generators & some GX240, GX270, GX340, & GX390 engines Length: 6-1/2", width: 4-1/2", height: 1-3/16" Pre-oiled foam air filter	
30-345	17211-ZB2-000	**Foam Air Filter** Fits GX160 & GX200 Length: 5-3/8", width: 3-1/8", height: 1-1/4" Pre-oiled air filter	
30-346	17211-ZE1-000	**Foam Air Filter** Fits GX120, GX160, & GX200 Length: 5", width: 4", height: 1-3/16" Pre-oiled air filter	
30-453	17218-ZE0-505 17218-ZE0-821	**Foam Pre-Cleaner** Length: 4-1/2", width: 1-1/8" Use with Oregon 30-318 Pre-oiled foam pre-cleaner	
30-506	17218-ZE1-821 Code 2535029 17218-ZE1-505 Code 5272802 17218-ZE1-507	**Foam Pre-Cleaner** Length: 5", width: 2-3/8" Use with Oregon 30-404 Pre-oiled foam pre-cleaner	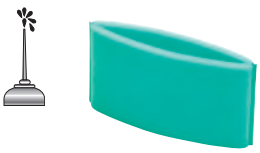
30-934	17218-ZE2-505 Code 5196308 17218-ZE2-821 Code 2538429	**Foam Pre-Cleaner** Length: 5-1/2", width: 2-7/8" Use with Oregon 30-406 Pre-oiled foam pre-cleaner	
30-454	17218-ZE3-505 17218-ZE3-000	**Foam Pre-Cleaner** Length: 5-1/2", width: 3-5/8" Use with Oregon 30-417 Pre-oiled foam pre-cleaner	
30-933	17218-ZE6-505 Code 5213293 17218-888-003 Code 1067149	**Foam Pre-Cleaner** Length: 8-1/4", width: 2-3/4" Use with Oregon® 30-400 & 30-401 Pre-oiled foam pre-cleaner	
30-452	17218-ZG9-800	**Foam Pre-Cleaner** Length: 5-1/4", width: 2-1/8", height: 1/4" Use with Oregon 30-027 Pre-oiled foam pre-cleaner	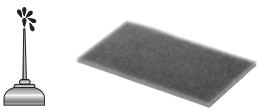

A

Air Filters

OREGON	Replaces	Description	Product Code	

Honda Foam Filters

30-932	17218-ZG9-M00 Code 4010070	**Foam Pre-Cleaner** Length: 5-1/2", width: 3-1/4", thickness: 1/4" Use with Oregon 30-709 Pre-oiled foam pre-cleaner (Previously Oregon 30-520)	
30-455	17218-ZJ1-840	**Foam Pre-Cleaner** Length: 8-5/8", width: 6-1/4", height: 1/4" Use with Oregon 30-436 Pre-oiled foam pre-cleaner	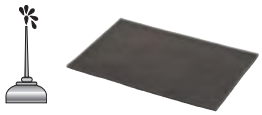
30-451	17218-Z0A-810	**Foam Pre-Cleaner** Length: 8-5/16", width: 4-7/16" Pre-oiled foam pre-cleaner Use with Oregon 30-704	
30-438	17231-ZM0-000 Code 5580444	**Air Filter Cover & Base Assembly** Fits GCV135/160	
30-332	Honda 17230-ZE1-820	**Air Cleaner Cover Assy** Fits GX110, GX120, GX140, GX160, & GX200	
30-334	Honda 17231-ZE3-W01	**Air Cleaner Cover Assy** Fits GX340 & GX390	

Can't find what you're looking for?
Try us online to search the latest products available.

OregonProducts.com

OREGON	Replaces	Description	Product Code	
Husqvarna				
30-622	505126303 505126306	**Air Filter** – NEW Fits Husqvarna 555, 560XP, CS2258, & CS2260 Length: 3", width: 2-1/2", height: 1-3/8"		
30-634	544 08 08-02	**Air Filter** – NEW Fits Husqvarna 445 445E 450, & 450E chainsaws		
30-631	544 18 16-02 506 36 72-03	**Air Filter** – NEW Fits Husqvarna K750 Length: 5", width: 4-1/2", height: 1-3/8"		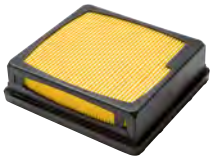
30-627	525 47 06-01 525470602	**Air Filter** – NEW Fits Husqvarna K750 Length: 4-7/8", width: 4-1/2", height: 2-1/2"		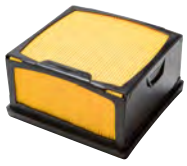
30-645	503 81 45-01 503 81 45-02 503 72 52-01	**Air Filter** – NEW Fits Husqvarna 362, 362EPA, 362 Special, 362XP, 365, 365EPA, 365 Special, 365 Special EPA, 371, 371EPA, 372, 372EPA, & 372XPW chainsaws Length: 3-3/5", width: 2-4/5", height: 1-3/5"		
30-630	503 81 45-03	**Air Filter** – NEW Fits Husqvarna 362, 365, 371, & 372 Length: 3-1/2", width: 2-7/8"		
30-637	501 80 71-05 501 80 71-01 501 80 71-02 501 80 71-06 501 80 71-03	**Air Filter** – NEW Fits Husqvarna 61, 181, 266, 281, & 288 Length: 3-1/2", width: 3-3/4", height: 1-3/8"		
30-648	503 89 82-01	**Air Filter** – NEW Fits Husqvarna 51 & 55 Length: 4", width: 3-1/2", height: 2"		
30-124	503 44 72-03	**Air Filter** Fits 261, 262, 268, 272, & 394 chainsaws		

A

Air Filters

OREGON	Replaces	Description	Product Code

Husqvarna

30-148	501 80 71-05	**Air Filter** Fits 61, 66, 266, 281, & 288 chainsaws	
30-170	506-26-91-01	**Foam Pre Cleaner** Fits 371K & 375K cut-off saws Laminated foam pre cleaner, 50PPI, 60PPI, & 80PPI layers, bonded together, & non-oiled Length: 7-5/8", width: 4-7/8", height: 13/16"	
30-623	522 67 50-03	**Air Filter** – NEW Fits Husqvarna 562XP Length: 3-1/8", width: 2-9/16", height: 2-1/2"	
30-641	530 02 98-11	**Air Filter** – NEW Fits Husqvarna 36, 41, 136, 137, 141, & 142 chainsaws Length: 3-1/8", width: 2-11/16", height: 7/8"	
30-633	537 02 40-02	**Air Filter** – NEW Fits Husqvarna 340, 345, 346 XP, 350, 351, & 353 chainsaws Length: 2-3/4", width: 2-1/2", height: 1-1/2"	

Kawasaki Paper Filters

30-303	11013-2021 John Deere AM101191	**Air Filter** Fits FB-460V For 12.5 HP engines, Wheel Horse & many others Length: 7", width: 2-1/4", height: 2-5/8" Includes Oregon® 30-935 foam pre-cleaner	
30-810		**Shop Pack** - (5) of 30-303	
69-032		**Blister Pack** - (1) of 30-303	
30-305	11013-2093 John Deere M70284	**Air Filter** Fits FC 290Y For 9 HP overhead valve engines Length: 4-3/4", width: 2-7/8", height: 2-7/8", ID: 3-3/8" Use with Oregon 30-936 foam pre-cleaner	
30-018	11013-2115 11029-2001 John Deere M76077 John Deere M76076 Gravely 21495800 Gravely 21495900 Gravely 21496000	**Air Filter** Fits FD590V & AS05, John Deere 240, 245, 260, 265 285, 320, 325, F710, F725, 345, 425, & 445 For 18 HP water-cooled engines Length: 8-3/4", width: 3-5/8", height: 2-3/4" Use with Oregon® 30-329 foam pre-cleaner	

A

Kawasaki Paper Filters

OREGON	Replaces	Description	Product Code
30-325	11013-2132	**Air Filter** Fits FE120 & FE170 OD: 5-15/16", ID: 5", height: 2-3/8"	
30-037	11013-2135 John Deere M115978 John Deere M96847	**Air Filter** Fits FD440 Length: 7", width: 3-5/8", height: 2-1/2" Use with Oregon 30-935 pre-cleaner	
30-321	11013-2139	**Air Filter** Fits FD-620 For 20 HP engine Length: 7-3/4", width: 4-1/2", height: 2-3/4" Use with Oregon 30-329 pre-cleaner	
30-311	11013-2110 11013-2141 John Deere M97211 John Deere AM104560 Gravely 21391300	**Air Filter** Fits FC420V For 14 HP vertical engines Pear shaped Length: 6-1/4", width: 3", height: 3-1/8" Includes Oregon 30-938 foam pre-cleaner	
30-804		**Shop Pack** - (5) of 30-311	
69-031		**Blister Pack** - (1) of 30-311	
30-304	11013-2098 11013-2143 11013-1214 John Deere M70128 John Deere M97266	**Air Filter** Fits FC540 series For 17 HP vertical overhead valve engine Pear shaped Length: 7-1/2", height: 3-1/8", ID: 6" Use with Oregon 30-937 foam pre-cleaner	
30-309	11013-2120 11013-2175 John Deere M79451	**Air Filter** Fits FC150V-19A00, VC150V-A500, & FC150V-E thru ES05 For 4-1/2 & 5 HP vertical engine on walk-behind mowers Length: 4", width: 2-1/2", height: 2-3/8" Includes Oregon 30-939 foam pre-cleaner	
30-814		**Shop Pack** - (5) of 30-309	
30-327	11013-2186 11013-2195	**Air Filter** Fits FD671, FD750, & FD791 Length: 2-7/8", OD: 7-7/8", ID: 5-7/8" Use with Oregon® 30-324 pre-cleaner	

Air Filters

OREGON	Replaces	Description	Product Code	

Kawasaki Paper Filters

30-224	11013-0727 11013-7050 99999-0383	**Air Filter** – NEW Fits Kawasaki FR541V-FR600V Length: 5-7/8", width: 2-3/4", height: 3-1/4" Outer Diameter: 2"	
30-322	11013-7002 John Deere 137556	**Air Filter** Fits FH-500V For 17 HP engine – blue seal Length: 8-1/4", width: 6-3/8", height: 1-1/4" Use with Oregon 30-940 pre-cleaner	
30-835		**Shop Pack** - (5) of 30-322	
69-322		**Blister Pack** - (1) of 30-322	
30-328	11013-7006	**Air Filter - Black Seal** Fits FH451 & FH500 Length: 8-1/4", width: 3-3/8", height: 1-3/8" NOTE: For LP gas applications only	
30-057	11013-7017	**Air Filter** Fits FH318V & FH430B For V-twins 15, 18, & 21 HP Length: 7-3/8", width: 4-5/16", height: 1" Use with Oregon 30-921 pre-cleaner	
30-054	11013-7010 11029-7002 11013-7024 11013-7005	**Air Filter** Fits FH601V, FH641V, FH661V, FH680V, & FH721V Length: 7-5/32", width: 3-1/32", height: 3" Use with Oregon 30-527 foam pre-cleaner NOT FOR INTERNALLY VENTED CARBURETORS	
30-833		**Shop Pack** - (5) of 30-054	
30-163	11013-7027	**Air Filter** Fits FH601V, FH641V, FH661V, FH680V, & FH721V Length: 7-5/32", width: 3-1/32", height: 3" Use with Oregon 30-527 foam pre-cleaner FOR INTERNALLY VENTED CARBURETORS	
30-164	11013-7049	**Air Filter** Fits FR651V, FR691V, FR730V, FS481V, FS541V, FS600V, FS651V, FS691V, & FS730V Length: 6-5/8", width: 2-3/4", height: 3"	
30-705	11013-7031	**Air Filter** Fits FH318V, FH430V, FH451V, & FH580V Length: 7-3/8", width: 3-3/8", height: 2-3/8" Use with Oregon 30-966 pre-cleaner	

A

OREGON	Replaces	Description	Product Code

Kawasaki Paper Filters

30-157	11013-7038	**Air Filter Outer** Fits FX751V, FX801V, FX850V, FX921V, & FXT00V Length: 10-3/4" Seal OD: 4-1/8" Seal ID: 3-1/8" Closed end OD: 4" Use with Oregon® 30-158	
30-158	11013-7039	**Air Filter Inner** Fits FX751V, FX801V, FX850V, FX921V, & FXT00V Length: 10" Seal OD: 3" Seal ID: 2" Closed end OD: 1-5/8" Use with Oregon 30-157	
30-055	11013-7044	**Outer Filter – Heavy-Duty Air Filter** Fits FX651V, FX691V, FX730V, FX751V, FX801V, FX850V, & FX921V Height: 10-3/4", OD: 4", ID: 2-1/2" Use with Oregon 30-056	
30-845		**Shop Pack** - (5) of 30-055	
30-056	11013-7045	**Inner Filter – Heavy-Duty Air Filter** Fits FX651V, FX691V, FX730V, FX751V, FX801V, FX850V, & FX921V Height: 10-1/4", OD: 2-1/4", ID: 1-13/16"	
30-849		**Shop Pack** - (5) of 30-056	
30-706	11029-7010	**Air Filter** Fits FJ1800 Length: 8-5/8", width: 2-3/4", height: 1-1/8" Use with Oregon 30-441 pre-cleaner	
30-313	3144-AA-1312A 49064-2059 John Deere M71952	**Air Filter** Fits FA210 For 5.2 HP engines Diameter: 3", height: 2-1/8" Base length: 4-7/8", base width: 4-1/4"	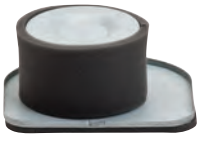

Kawasaki Foam Filters

30-456	11013-2010	**Foam Pre-Cleaner** Length: 4-13/16", width: 1-7/8" Use with Oregon 30-313 Pre-oiled foam pre-cleaner	

A

Air Filters

Kawasaki Foam Filters

OREGON	Replaces	Description	Product Code
30-935	11013-2020 John Deere M88571 John Deere M115978 Gravely 042925	**Foam Pre-Cleaner** Length: 7-3/4", width: 2-1/8" Use with Oregon® 30-037, 30-303, 30-314, & 30-319 Pre-oiled foam pre-cleaner	
30-936	11013-2092 John Deere M70283	**Foam Pre-Cleaner** Length: 5", width: 2-3/8" Use with Oregon 30-305 Pre-oiled foam pre-cleaner	
30-937	11013-2097 John Deere M70127	**Foam Pre-Cleaner** Length: 8-1/2", width: 2-5/8" Use with Oregon 30-304 Pre-oiled foam pre-cleaner	
30-938	11013-2109 John Deere M74285 Gravely 21391200	**Foam Pre-Cleaner** Length: 7-1/2", width: 2-3/8" Use with Oregon 30-311 Pre-oiled foam pre-cleaner	
30-329	11013-2114	**Foam Pre-Cleaner** Use with Oregon 30-018 & 30-321 Pre-oiled foam pre-cleaner	
30-939	11013-2119 John Deere M77555	**Foam Pre-Cleaner** Length: 4-5/8", width: 1-7/8" Use with Oregon 30-309 Pre-oiled foam pre-cleaner	
30-457	11013-2134	**Foam Pre-Cleaner** Fits FD440V/FD501V series Length: 7-13/16", width: 2-1/8" Pre-oiled foam pre-cleaner	
30-940	11013-7001 John Deere JD137555	**Foam Pre-Cleaner** Length: 7-3/4", width: 3-1/4" Use with Oregon 30-322 Pre-oiled foam pre-cleaner	
30-527	11013-7009	**Foam Pre-Cleaner** Length: 9-3/8", width: 2-5/8" Use with Oregon 30-054 Pre-oiled foam pre-cleaner	
30-921	11013-7016	**Foam Pre-Cleaner** Use with Oregon 30-057 Pre-oiled foam pre-cleaner	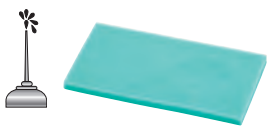
30-441	11013-7018	**Foam Pre-Cleaner** Fits FJ180V-AS04 Length: 7", width: 2-1/4", height: 3/8" Use with Oregon 30-706 Pre-oiled foam pre-cleaner	

A

OREGON	Replaces	Description	Product Code

Kawasaki Foam Filters

30-966	11013-7025	**Foam Pre-Cleaner** Length: 9, width: 2-1/2" Use with Oregon® 30-705 Pre-oiled foam pre-cleaner	
30-185	11013-7046 11013-7041	**Foam Pre-Cleaner** Length: 7-3/4", width: 2-1/2" Use with Oregon 30-164 Pre-oiled foam pre-cleaner	

Enginaire

30-331		**Composite Pre-Cleaner Assembly** Use with Oregon 30-065, 30-330, 30-376, 30-377, & 30-378 (Enginaire filters)	

Kohler Paper Filters

30-085	12-083-05 12 083 05 12 083 14-S John Deere M92359 John Deere AM121608	**Air Filter** For 12.5 HP Command series engine Triangular shape Length: 4-1/2", width: 3-3/4", height: 2-3/4" Use with Oregon 30-942 foam pre-cleaner	
30-815		**Shop Pack** - (5) of 30-085	
30-088	12-083-10-S1 12 083 10-S1 12 083 16-S	**Air Filter** Fits commercial walk-behinds after serial no. 2404900004 For 14 HP Command series engines Length: 4-1/2", width: 3-3/4", height: 3-1/4" Use with Oregon 30-943 foam pre-cleaner	
30-834		**Shop Pack** - (5) of 30-088	
30-212	14 083 15-S	**Air Filter** – NEW Fits Kohler XT650 & XT675 Length: 4-1/4", width: x 3-1/2", height: 1/2"	
30-225	20 083 02 20 083 02-S 20 083 06 20 083 06-S Ariens 21541600 Craftsman 24642 Cub Cadet KH-20 883 02-S1 Cub Cadet OCC-20 083 02 Husqvarna 577513401 Toro 98018	**Air Filter** – NEW Fits Cub Cadet LTX1040 & LTX1045; Kohler SV470S-SV620; Toro 13AX60RG744 & 13AX60RH744 lawn tractors For Courage single series 15 thru 22 HP engines Length: 6-3/4", width: x 5-3/8 “, height: 1-3/8"	

A

Air Filters

Kohler Paper Filters

OREGON	Replaces	Description	Product Code
30-605	17 083 23-S 17 083 04-S 17 083 07-S	**Air Filter** – NEW For Kohler CH270 Length: 2-1/2", height: 3-7/8" Height: 3-7/8", ID: 1-1/4", OD: 2-1/2"	
30-606	17 083 21-S 17 083 03-S 17 883 01-S1	**Air Filter** – NEW For Kohler CH395 & CH440 Length: 3", height: 4-3/8", ID: 1-5/8", OD: 3"	
30-609	47 883 03-S1	**Air Filter Combo, Filter with Pre-Filter** – NEW For Kohler CV, CH, CV24-CV740, & CH730-CH740; 17 thru 25 HP Command horizontal and vertical engines Length: 7", height: 2-1/2", ID: 5-3/8", OD: 7"	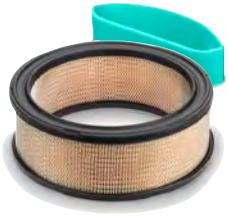
30-165	14 083 01-S 14 083 04-S	**Air Filter** Fits XT149, XT173, XT-6, & XT-7 For Courage walk-behind mower engines Length: 5-5/8", width: 3-5/8", height: 1" Use with Oregon 30-190 foam pre-cleaner	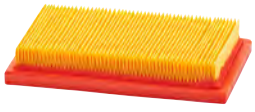
30-089	24-083-03-S1 24 083-S1	**Air Filter** Fits M25 & CH18 For 25 HP Command engine OD: 6-7/8", ID: 5-1/2", height: 2-7/8" Use with Oregon 30-945 foam pre-cleaner	
30-844		**Shop Pack** - (5) of 30-089	
30-055	25-083-01S 25 083 01-S Kubota TA040-93230	**Heavy-Duty Air Filter** Fits CH18S, CH20S, CH22S, CH25S, & CH26S with heavy-duty dual element filters, 24-743-22S heavy-duty air filter kit, & Toro Z-Master 200-Series mowers For commercial mowers OD: 4", ID: 2-1/2", height: 10-3/4" Use with Oregon® 30-056	
30-845		**Shop Pack** - (5) of 30-055	
30-056	25-083-04 Kubota TA040-93220	**Inner Filter for Heavy-Duty Air Filter** Fits CH18S, CH20S, CH22S, CH25S, & CH26S with heavy-duty dual element filters, & 24-743-22S heavy-duty air filter kit For commercial mowers OD: 2-1/4", ID: 1-13/16", height: 10-1/4"	
30-849		**Shop Pack** - (5) of 30-056	
30-708	25-083-02S	**Air Filter Outer** Fits CH25,CH26, & TH16 with canister type filter OD: 3-1/2", ID: 1-7/8", height: 7-1/4" Use with Oregon 30-712 inner air filter	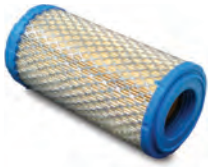

A

Kohler Paper Filters

OREGON	Replaces	Description	Product Code
30-712	25-083-03S	**Air Filter Inner** Fits CH25,CH26, & TH16 with canister type filter OD: 1-5/8", ID: 1-3/8", height: 6-3/4" Use with Oregon 30-708 outer air filter	
30-082	25-883-01-51 231847 Cub Cadet 548436R1 John Deere AM30800 Tecumseh 31925 Onan 140-1188	**Air Filter** Fits K161 & K181 series For 7 & 8 HP engines OD: 4-3/8", ID: 3", height: 2-3/8" Use with Oregon 30-125 foam pre-cleaner	
30-847		**Shop Pack** - (5) of 30-082	
30-081	230840 Clinton 002-0233-00 Cub Cadet 385163R2 John Deere AM31034 Gravely 020299	**Air Filter** Fits K90, K91, K141, & K161 series For 4, 6-1/4, & 7 HP engines OD: 4-3/8", ID: 3", height: 1-1/2"	
30-080	235116 Cub Cadet 385168R2 John Deere AM31400 Wisconsin L0194A Gravely 010900 Tecumseh 32008	**Air Filter** Fits K241, K301, & K321 series For 10, 12, & 14 HP engines Use with Oregon 30-941 foam pre-cleaner OD: 6-1/16", ID: 4-3/4", height: 1-7/8"	
30-819		**Shop Pack** - (5) of 30-080	
30-023	28-083-03-S 28 083 03-S	**Air Filter Element** Fits TH16: 52501 to 52532 (except 52502 52503, 52509, 52512, 52513, 52519, & 52520), TH18: 52501 to 54526 (except 52502, 52503, 52509, 52512, 52513, 52519, & 52520) For TH16 & TH18 command series engines Use with Oregon® 30-340 foam pre-filter Length: 9-1/4", width: 6-3/4", height: 1-1/2"	
30-159	32 083 06-S	**Air Filter** Fits SV810S, SV820S, & SV830S engines Length: 5-5/8", width: 4-3/8", height: 3-1/8" Use with Oregon 30-460 foam pre-filter	
30-130	32-883-03-S1 32 883 03-S1	**Air Filter** For twin cylinder Courage engines Length: 5-5/8", width: 4-1/4", height: 1-3/4" Includes foam wrap	

A

Air Filters

OREGON	Replaces	Description	Product Code

Kohler Paper Filters

30-093	45-083-02 45 083 02 Cub Cadet 61606C1 Cub Cadet 759-3359 Gravely 0347661046344 John Deere AM37201 John Deere AM31034 Onan 140-1216	**Air Filter** Fits K341 series: MV16 to MV20, M10 to M16, KT17, KT19, K321, K482, CV20, CV18, & 22 For 16 HP engines OD: 6", ID: 4-5/8", height: 3" Use with Oregon 30-946 foam pre-cleaner	
30-812		**Shop Pack** - (5) of 30-093	
30-098	47-083-01-S1 Cub Cadet 117210C1 Cub Cadet 759-3547 John Deere M8364	**Air Filter** Fits K181 to K241-341, CH11 to CH14, KT17, KT19, & M18 For 10, 12, 14, & 16 HP quiet series engines, & 17, 18, 19, & 20 HP twin cylinder engines OD: 7", ID: 5-1/2", height: 1-3/4" Use with Oregon 30-947 foam pre-cleaner	
30-848		**Shop Pack** - (5) of 30-098	
30-095	47-083-03-S1 John Deere M47494 Woods 71803	**Air Filter** Fits K241AQS, K301AQS, K321AQS, K341AQS, CH18, CH20, CH25, CV18, CV20, & CV22 series For 10, 12, 14, & 16 HP quiet series engines OD: 7", ID: 5-1/2", height: 2-1/2" Use with Oregon 30-944 foam pre-cleaner	
30-818		**Shop Pack** - (5) of 30-095	
69-395		**Blister Pack** - (1) of 30-095	

Kohler Foam Filters

30-125	234869	**Foam Pre-Cleaner** Length: 7", width: 2-3/8" Use with Oregon® 30-082 Pre-oiled foam pre-cleaner	
30-941	237421-S John Deere M45800 Gravely 019332 Tecumseh 32906	**Foam Pre-Cleaner** Length: 9", width: 1-3/4" Use with Oregon 30-080 Pre-oiled foam pre-cleaner	
30-942	12-083-08-S 12 083 08-S John Deere M92360	**Foam Pre-Cleaner** Length: 6", width: 2-3/4" Use with Oregon 30-085 Pre-oiled foam pre-cleaner	
30-943	12-083-12 After serial 2404900004 12 083 12	**Foam Pre-Cleaner** Length: 6-3/8", width: 3-1/4" Use with Oregon 30-088 Pre-oiled foam pre-cleaner	

A

Kohler Foam Filters

OREGON	Replaces	Description	Product Code
30-190	14 083 02-S	**Foam Pre-Cleaner** Fits XT149, XT173, XT675, & XT800 engines Length: 5/38", width: 3-3/16", height: 3/16" Use with Oregon 30-165 Pre-oiled foam pre-cleaner	
30-189	17 083 12-S 17 083 06-S	**Foam Pre-Cleaner** Fits CH260 & CH270 Engines Use with Oregon 30-188 Pre-oiled foam pre-cleaner	
30-458	20 083 04-S	**Foam Pre-Cleaner** Fits SV470, SV530, SV540, SV541, SV590, SV591, SV600, SV601, & SV620 Engines Length: 6-5/16", width: 2-5/8", height: 1-1/2" Pre-oiled foam pre-cleaner	
30-944	24-083-02 24 083 02	**Foam Pre-Cleaner** Length: 10-1/2", width: 2-3/8" Use with Oregon 30-095 Pre-oiled foam pre-cleaner	
30-945	24-083-05-S 24 083 05-S	**Foam Pre-Cleaner** Length: 10-1/2", width: 2-3/4" Use with Oregon 30-089 Pre-oiled foam pre-cleaner	
30-459	32 083 05-S	**Foam Pre-Cleaner** Fits SV710, SV715, SV720, SV725, SV730, SV735, & SV740 Engines Length: 8-1/4", width: 1-1/2" Pre-oiled foam pre-cleaner	
30-460	32 083 08-S	**Foam Pre-Cleaner** Length: 8-1/4", width: 2-13/16" Use with Oregon 30-159 Pre-oiled foam pre-cleaner	
30-946	45-083-01 45 083 01	**Foam Pre-Cleaner** Length: 8-3/4", width: 3" Use with Oregon® 30-093 Pre-oiled foam pre-cleaner	
30-947	52-083-01-S 52 083 01-S John Deere M83681	**Foam Pre-Cleaner** Length: 10-1/4", width: 1-5/8" Use with Oregon 30-098 Pre-oiled foam pre-cleaner	
30-608	14 083 09-S	**Foam Air Filter** – NEW Fits Kohler XT7, XT7.75, XT8, XT173, XT675, XT775, & XT800 Length: 5-3/4", width: 3-1/2", height: 7/8"	

A

Air Filters

OREGON	Replaces	Description	Product Code

Kubota

30-019	15852-11082	**Cyclonic Air Filter** Fits B20, B1550, B1750, D, E, HSD, HST, G1800-S, G1900HST, G2000, G2000S, G3200, G4200H, G5200H, & G6200H Top OD: 3-1/4", bottom OD: 5", height: 7"	
30-316	12681-11220	**Filter with Foam Pre-Cleaner** For 5 HP engine on self-propelled models Length: 7-7/8", width: 2-1/8", height: 2"	
30-025	70000-11221 Toro 33-1300 John Deere M75144	**Cylconic Air Filter** Fits older John Deere AMT600 For B series below 20 HP Height: 7-3/8", diameter: 3-1/4"	
30-026	70000-11081 Toro 27-7110 Dixie Chopper 90122 Bobcat 48426 John Deere CH12767	**Cylconic Air Filter** For L series 20HP & above, & most Dixie Choppers Height: 10-3/8", diameter: 4-1/16"	
30-055	TA040-93230 Kohler 25-083-01S	**Heavy-Duty Air Filter** Fits CH18S, CH20S, CH22S, CH25S & CH26S with heavy-duty dual element filters, 24-743-22S (Kohler heavy-duty air filter kit), & Toro Z-Master 200-Series mowers For commercial mowers Height: 10-3/4", OD: 4", ID: 2-1/2" Use with Oregon 30-056	
30-845		**Shop Pack** - (5) of 30-055	
30-056	TA040-93220 Kohler 25-083-04	**Inner Filter - Heavy-Duty Air Filter** Fits CH18S, CH20S, CH22S, CH25S, & CH26S with heavy-duty dual element filters, & 24-743-22S (Kohler heavy-duty air filter kit) For commercial mowers Height: 10-1/4", OD: 2-1/4", ID: 1-13/16"	
30-849		**Shop Pack** - (5) of 30-056	

A

OREGON	Replaces	Description	Product Code

Lawnboy

30-758	613361	**Air Filter** For M-series engines Panel filter used since 1987 Length: 6-5/8", width: 3-7/8", height: 7/8"	
30-949	607580	**Foam Air Filter** For D-series engines Length: 4", width: 2-1/8", height: 7/8" Pre-oiled foam filter	
30-950	609493	**Foam Air Filter** For F-series engines Length: 4-1/2", width: 2-1/2", height: 1-1/4" Pre-oiled foam filter	
30-957	955574	**Air Filter** For V-series 2-cycles Length: 5-11/16", width: 3-5/32" Pre-oiled foam filter	

Maruyama

55-206	261598	**Foam Air Filter** Fits MC2300, MC2600, & MC3210 trimmers Height: 1", OD: 2-3/16", ID: 1-5/16"	

McCulloch

55-212	69922 92420	**Felt Air Filter** Fits models 10-10, 700 series, & Mac 55 & 850 For chainsaws Length: 4-3/8", width: 4-1/4"	
55-214	95213 214226	**Felt Air Filter** Fits Eager Beaver models 600, 610, 650, & 800 For chainsaws Length: 4-3/8", width: 4-1/4"	
55-218	214224 61460 216905	**Felt Air Filter** Fits model 110, 120, & 130 Eager Beaver For chainsaws Diameter: 2", thickness: 7/8"	

A

Air Filters

OREGON	Replaces	Description	Product Code

Mitsubishi

30-498	505 30 92-01 KA40046AA	**Air Filter** – NEW Fits Mitsubishi TL20, TL23, TL26, TL33, TL43 TL52, & TU26 Length: 7-1/4", width: 4-3/16", height: 1"	

MTD

30-166	951-10298	**Air Filter** Fits 1P61PO, 1P65MC, 1P70CO, & 2P70MO walk-behind mower engines Length: 5-5/8", width: 3-5/8", height: 1" Includes foam pre-filter	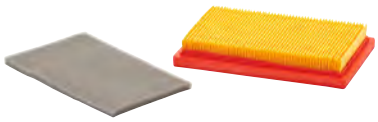
30-207	951-14627 751-14627	**Air Filter** – NEW For POWERMORE Premium OHV Engine Series 140 cc Length: 6-2/3", width: 4-4/5", height: 1-1/2"	
30-209	951-14628	**Air Filter** – NEW Fits 5T65RU, 5T65RUA, 1T65NUB, & 5T65VUA engines Length: 4/5", width: 1-1/10", height: 1-1/3"	
30-610	937-05065A 951-12260 751-12260 937-05065	**Air Filter Combo, Filter with Pre-Filter** – NEW Fits Huskee 13W2775S031 & 4P90JUB; Yardman 13A2785S001 & 4P90JUB For MTD 420cc OHV Engines Length: 6", width: 3-1/4", height: 2-1/2", ID: 2"	
30-611	753-06417	**Foam Air Filter** – NEW Fits Troy Bilt TB22EC, TB2MB, & TB32EC; Bolens BL110 & BL160; Remington RM2510, RM2520, RM2560, RM2570, & RM2599; Murry M2500, M2510, MS2550, & MS2560; Yard Man Y25, Y2500, Y2550EC, Y2700EC, Y2900EC, Y60, YM21CS, & YM71SS Length: 3-1/2", width: 1"	

Oleo-Mac, Efco

30-640	61200025AR	**Air Filter** – NEW Fits SP38, SP42, SP380, & SP440 Length: 4-1/10", width: 3-1/2"	
30-629	61120018R	**Air Filter** – NEW Fits Oleo Mac 746, 753, & 755 brush cutters; Efco 8460, 8530IC, 8535, 8535 ERGO, & 8550 BOSS brush cutters Length: 3-3/5", width: 2-3/5", height: 1-1/20"	

A

OREGON	Replaces	Description	Product Code

Onan

30-082	140-1188 Tecumseh 31925	**Air Filter** Fits HH80, HH100, HH120, VH80, & VH100 series engines For 8, 10, & 12 HP horizontal engines OD: 4-3/8", ID: 3", height: 2-3/8"	
30-093	140-1216 Cub Cadet 61606C1 John Deere AM37201 Kohler 45-083-02	**Air Filter** Fits K341 series: MV16 to MV20, M10 to M16, KT17, & KT19, & BF, BFA, BS, BGA, B43, & B48 For 16 HP Kohler OD: 6", ID: 4-5/8", height: 3" Use with Oregon® 30-126 foam pre-cleaner	
30-430	140-1228 140-2522 140-2628 Grasshopper 100941 John Deere AM106953 Toro NN10774	**Air Filter** Fits NHC, T260, & P218, John Deere 318 & 420 tractors OD: 8-1/4", ID: 6-3/8", height: 2-1/4" Use with Oregon 30-953 pre-cleaner	
30-846		**Shop Pack** - (5) of 30-430	
30-953	140-1496 John Deere HE140-1496	**Foam Pre-Cleaner** Fits NHC, T260, & P218 Use with Oregon 30-430 Pre-oiled foam pre-cleaner (Previously Oregon 30-011)	

Partner

30-149	506-23-18-02	**Air Filter** Fits K950 & K1250 Active cut-off saws Length: 6", width: 4-1/4", height: 2-5/8"	

Poulan

55-515	530-37793	**Foam Air Filter** Fits 1950, 2050, 2075, 210, 2150, 2175, 2250, 230, 2450, 2550, & 260 gas chainsaws Pre-oiled foam filter	
55-612	23369	**Foam Air Filter** Fits model 25 For chainsaws Length: 3-3/8", width: 1-5/8", height: 1-1/4" Pre-oiled foam filter	
55-613	23791	**Foam Air Filter** Fits MICRO XXV, 18, 20, & 2300 For chainsaws Length: 2-5/8", width: 1-1/2", height: 1" Pre-oiled foam filter	

A

Air Filters

OREGON	Replaces	Description	Product Code

Poulan

55-226	24548	**Felt Air Filter** Fits models 3400 & 3700 For chainsaws Length: 3-7/8", width: 2-5/8", height: 1"	
30-964	530-036575	**Foam Air Filter** For Featherlite & other gas trimmers Pre-oiled foam air filter	
30-965	530-049383	**Foam Air Filter** For BV-series gas blowers Pre-oiled foam air filter	

Red Max

30-068	T4012-82310	**Air Filter** Fits EB7000 blower	
30-067	550-82171	**Foam Air Filter** Fits BC2300DL & BC2600DL trimmers Pre-oiled foam	
30-652	577633001 57763301 577633001	**Foam Pre-Filter** – NEW Fits Red Max BCZ230TS, BCZ2450, BCZ2460, BCZ260, BCZ2650, BCZ2660, BCZ3050, & BCZ3060 Length: 2-9/10", width: 3-1/4", height: 3/8"	
30-955	T4012-82320	**Air Filter** Fits EB-7000 blower Pre-oiled foam	

Shindaiwa

55-231	20000-81740S Stihl 4114-124-0800 Green Machine 309891 Robin 1082	**Foam Air Filter** Fits T20, T25, C35, & B45 trimmers Diameter: 2-1/4", thickness: 5/16" Pre-oiled foam filter	
55-510	70064-82210	**Foam Air Filter** Fits T18, F18, T230, C230, LE230, & TT230XB trimmers Length: 9/16", width: 3-3/8" Pre-oiled foam filter	
30-719	38010-82581	**Air Filter** Fits EC7500 & EC7600 cut-off saws Includes foam pre-filter 7" L x 4" W x 2"H	

A

OREGON	Replaces	Description	Product Code	
Shindaiwa				
30-721	60023-98031	**Air Filter** Fits T230 & T231 trimmers 2-1/4" L x 1-7/8" W x 3/8" H		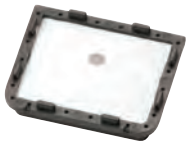
Stihl				
30-220	1140 140 4401	**Air Filter** – NEW Fits MS 311, MS 362, & MS 391 chainsaws Length: 4-3/8", width: 3-5/8", height: 1-7/8"		
30-221	1145 140 4400	**Air Filter** – NEW Fits MS 201 T chainsaws Length: 4-7/16", width: 3", height: 3/4"		
30-223	4148 141 0300	**Air Filter** – NEW Fits FS 240 C, FS 240 RC, FS 260 C, FS 260 RC, FS 360 C, FS 410 C, FS 460 C, & FS 460 RC Length: 5-1/4", width: 3", height: 2"		
30-853	0000-120-1654	**Air Filter** Fits 044, MS440, 066, MS660, 084, & 088 3-piece kit 5" L x 4-1/8" W x 1-3/4" H		
30-154	1110-120-1601	**Air Filter** Fits 041		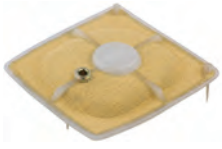
30-155	1120-120-1600	**Air Filter** Fits 009, 010, & 011		
30-337	Stihl 1121-120-1617	**Air Filter** Fits 024, 026, MS240, & MS260		
30-156	1130-124-0800	**Air Filter** Fits 017, 018, MS170, & MS180		
55-236	1118-120-1611	**Air Filter** Fits 028 saw Length: 3-1/2", width: 2-1/4", height: 3/4"		

A

Air Filters

OREGON	Replaces	Description	Product Code	
Stihl				
30-642	1123 120 1612 1123 120 1613	**Air Filter** Fits Stihl MS210, MS230, MS250		
55-079	4134-141-0300	**Air Filter** Fits FS200, FS300, FS350, FS400, & FS450 brushcutter trimmers Length: 3-1/2", width: 2-3/4", height: 1"		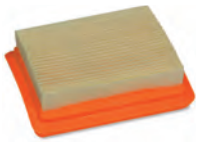
30-416	4203-141-0300	**Air Filters** For BR320 & BR400 backpack blowers OD: 2-7/8", ID: 2", height: 1-1/2"		
30-837		**Shop Pack** - (5) of 30-416		
30-137	4203-141-0301	**Air Filter** Fits Early versions of BR320, 340, 400, & 420 backpack blowers Length: 5-1/8", width: 3-1/2", height: 1-1/2"		
55-247	4203-141-0310	**Felt Pre-Cleaner** Fits BR320 & 400 backpack blowers Use with Oregon® 30-416 4-3/4" L x 1-1/2" H		
55-240	4201-141-0300	**Air Filter** Fits Quick Cut TS350, TS360, & TS510 For cut-off saws OD: 3-7/8", ID: 2-3/8", height: 2-7/8" Use with Oregon 55-242 inner filter & 55-241 pre-cleaner		
55-242	4201-140-1801	**Inner Filter** Fits Quick Cut TS350, TS360, & TS510 For cut-off saws Use with Oregon 55-240 & 55-241		
55-241	4201-141-0310	**Felt Pre-Cleaner with Stitched Elastic** Fits Quick Cut TS350, TS360, & TS510 For cut-off saws Tight seal Length: 5-1/2", width: 2-3/4" Use with Oregon 55-240 & 55-242		
55-263		**Air Filter Kit** Fits Quick Cut models TS350, TS360, & TS510 cut-off saws Contains (1) each of Oregon® 55-240, 55-241, & 55-242		
55-246	4221-141-0310	**Felt Pre-Cleaner** Fits TS460 cut-off saw Stitched elastic for tight seal Use with Oregon 55-248 air filter & 55-243 inner filter		

A

OREGON	Replaces	Description	Product Code

Stihl

55-243	4221-140-1800	**Inner Filter** Fits TS460 cut-off saw, OD: 2-7/8", ID: 2-11/16", height: 1-11/16" Use with Oregon 55-248 & 55-246	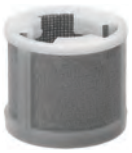
55-248	4221-140-4400	**Air Filter, Main** Fits TS460 cut off saw Diameter: 4-1/2", height: 2-1/4" Use with Oregon 55-243 inner filter & 55-246 pre-cleaner	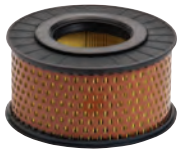
55-262		**Air Filter Kit** Fits Quick Cut TS460 cut-off saws Contains (1) each of Oregon 55-243, 55-246, & 55-248	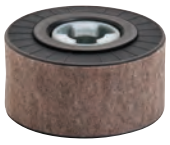
55-244	4223-140-1800	**Air Filter** Fits TS400 cut-off saw Secondary filter, flocked screen Length: 4-5/8", width: 2-3/4", height: 3/8"	
30-838		**Shop Pack** - (5) of 55-244	
55-249	4223-141-0300	**Air Filter Panel Style** Fits TS400 cut-off saw (main filter) Width: 5-3/8", length: 3-1/2", height: 1-15/16"	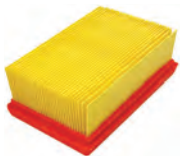
30-839		**Shop Pack** - (5) of 55-249	
55-245	4223-141-0600	**Foam Pre-Cleaner** Fits TS400 cut-off saw Outer foam filter, Width: 3-5/32", length: 4-7/8", height: 3/4"	
30-639	1125-160-1612 1125-120-1626	**Air Filter –** NEW Fits Stihl 034, 036, MS340, & MS360 Length: 4-1/8", Width: 3-5/8", Height: 1-5/8"	
30-644	4229-120-1800 4229 124 1500	**Air Filter –** NEW Fits Stihl BG45, BG46, BG55, BG65, BR45, SH55, & SH85 Length: 3", width: 2-3/8", height: 1/2"	
30-643	4180-120-1800	**Air Filter –** NEW Fits Stihl FC100, FC110, FC90, FC95, FR130, FS90R, FS100, FS100ARX, FS110, FS130, FS310, FS87, FS90, FT100, FX130, HL100, HL90, HL95, HT100, HT101, HT130, HT131, KM100, KM110, KM130, KM90, & SP90 Length: 2-5/8", width: 3", height: 1/2"	

A

Air Filters

OREGON	Replaces	Description	Product Code

Stihl

30-653	0000-141-0300	**Foam Pre-Filter** – NEW Fits Stihl 044, 046, 064, 066, 084, 088, MS440, MS441, MS460, MS640, MS650, MS660, MS780, & MS880 Length: 11-2/5" ,height: 1-2/5", OD: 3-3/4"	
30-222	4144 124 2800	**Foam Pre-Filter** – NEW Fits: Stihl KM56, KM56R, KM56C, & KM56RC Kombi engines; FC56, FC56C, FC70, & FC70C edgers; FS40, FS40C, FS50, FS50C, FS50L, FS56, FS56C, FS56R, FS56RC, FS70, FS70C, & FS70RC trimmers; HT56 & HT56C hedge trimmers Length: 3", width: 2-3/8", height: 1/4"	
30-153		**Air Filter Kit** Fits TS400 cut-off saws Contains (1) each of Oregon 55-245, 55-244, & 55-249	
30-333	Stihl 4238-140-4401	**Air Filter Kit** Fits TS410 & TS420 cut-off saws Length: 5-7/8", width: 3-7/8" (5-1/2" w/loop), height: 1-1/2"	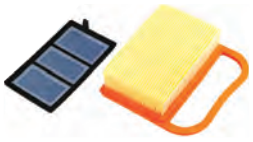
55-231	4114-124-0800 Green Machine 309891 Robin 1082	**Foam Air Filter** Fits Stihl old style models FS50, FS51, FS60, & FS61 Diameter: 2-1/4", thickness: 5/16"	
30-956	4137-124-1500	**Air Filter** Fits FS75, FS80, FS85, HS80, HL75K, FC75, & BG75 Length: 2-7/16", width: 2-7/16", height: 1/4" Pre-oiled foam filter	

Tecumseh Paper Filters

30-070	30727 Cub Cadet 488619R1 Cub Cadet TC30727 John Deere AM30900	**Air Filter** Fits LAV, H, HS, HH, VH, HM, V40-70, & HS30 series For 3–8 HP vertical & horizontal engines OD: 3-5/8", ID: 2-1/4", height: 2"	
30-822		**Shop Pack** - (5) of 30-070	
30-081	30804	**Air Filter** Fits H40, H50, H60, & H70 series For 4, 5, 6, & 7 HP horizontal engines OD: 4-3/8", ID: 3", height: 1-1/2"	
30-082	31925	**Air Filter** Fits HH80, HH100, HH120, VH80, & VH100 series engines For 8, 10 & 12 HP horizontal engines OD: 4-3/8", ID: 3", height: 2-3/8"	

A

OREGON	Replaces	Description	Product Code

Tecumseh Paper Filters

30-080	32008 Case C-2883 Cub Cadet 385168R2 Gravely 010900 John Deere AM31400 Wisconsin-Robin L0194A Kohler 235W6	**Air Filter** Fits HH80, HH100, HH120, OH140, OH160, & OH180 For 8, 10, 12, 14, 16, & 18 HP horizontal engines OD: 6-1/16", ID: 4-3/4", height: 1-7/8" Use with Oregon® 30-941 foam pre-cleaner	
30-091	32972	**Air Filter** Fits TVS90, TVS105, H30, H35, ECH90, LAV40, LAV50, & ECV series For series 3–5 HP Length: 3", dia.: 2", neck dia. & length: 3/4" x 1"	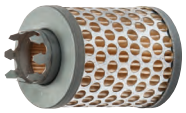
30-100	33268 John Deere N49746	**Air Filter** Fits HM70, H80, HM80, VM80, & HM100 series For 7, 8, & 10 HP horizontal engines OD: 4-1/2", ID: 1-1/2", height: 2-1/4" Use with Oregon® 30-936 foam pre-cleaner	
30-841		**Shop Pack** - (5) of 30-100	
30-142	34700 34200A 34200B	**Air Filter** Fits HM70 to HM100 For 8 HP horizontal engines 4-1/2" H x 2-7/8" Dia. Bottom ID: 1-3/16", top ID: 1/4"	
30-141	34782 34782A 34782B	**Air Filter** Fits HS40, HS50, H50, H70, TVS840, TVXL105, & 120 Height: 3-1/2", diameter: 2- 7/8", top ID: 1/4" Use with Oregon 30-116 foam pre-cleaner	
30-301	35066 Sears 63087A Sears 10096 John Deere AM123992	**Air Filter** Fits ECV, LEV115, ECV120, H30, 35, & TVS series For 3.5 & 4 HP vertical engines OD: 1-3/4", ID: 13/16", height: 2-7/8"	
30-801		**Shop Pack** - (5) of 30-301	
69-034		**Blister Pack** - (1) of 30-301	
30-111	35403	**Air Filter** Fits OVXL120, TVXL195, OVXL125, OHV 12, 13, 125, & 200 series For 12 HP vertical engines Length: 8", width: 2", height: 2-1/2" Mtg. holes: 2-5/8" center to center Use with Oregon 30-951 foam pre-cleaner	
30-842		**Shop Pack** - (5) of 30-111	

A

Air Filters

OREGON	Replaces	Description	Product Code

Tecumseh Paper Filters

30-112	35500	**Air Filter** Fits TVS90, TVS100, TVS120, TVXL105, TVXL120, OVRM40, OVRM50, OVRM120, & ECV 100 series For 3–5 HP vertical engines with panel filter Length: 7-3/16", width: 2-1/4", height: 3/4" Use with Oregon 30-115 foam pre-cleaner	
30-740	36046	**Air Filter** Fits OHH45, OHH50, VLV126, VLV40, VLV50, VLV55, VLV60, VLV65, VLV66, VLXL50, & VLVXL55 For 4 & 5 HP engines Length: 3-3/8", width: 3-3/4", height: 1-1/4"	
30-807		**Shop Pack** - (5) of 30-740	
30-024	36356	**Air Filter** Fits OHV110, OHV115, OHV120, OHV125, OHV130, OHV135, OHV140, OHV14, OHV145, OHV15, OHV150, OHV155, OHV160, OHV165, OHV170, OHV17, & OHV 175 model engines Length: 7-1/8", width: 2-1/4" & 2-7/8", height: 3" Use with Oregon® 30-525 foam pre-cleaner & 30-952	
30-850		**Shop Pack** - (5) of 30-024	
30-030	36745	**Air Filter** For 5.5 HP Centura engines Length: 2-3/4", width: 1-3/4", height: 2-1/8"	
30-840		**Shop Pack** - (5) of 30-030	
30-031	36905	**Air Filter** Fits 65, RVS115, & 120 For 5.5 HP Tecumseh & Craftsman Length: 2-3/4", width: 1-3/4", height: 2-7/8"	
30-817		**Shop Pack** - (5) of 30-031	
69-331		**Blister Pack** - (1) of 30-031	
30-443	37360	**Air Filter** Fits OV, TVT, & VTX series engine Length: 7-1/4", width: 7", height: 1-1/4"	
30-711	450247	**Air Filter** Fits TVS840, TVSXL840, TVXL840, & TC200-300 engines For 4 HP, 2-cycle engines models (Previously Oregon 30-110)	

A

OREGON	Replaces	Description	Product Code

Tecumseh Foam Filters

30-083	29961	**Foam Air Filter** Fits LAV 40, 50. H30, 35, 40, 50, 70, HH60, 70, HM100, HS40, 50, & TVM140 series For 3, 3-1/2, 4, & 5 HP vertical & horizontal engines Length: 3-1/4", width: 2-5/8", height: 2-1/4"	
30-205	31700	**Foam Air Filter** Fits LAV, H, HS, VH, & HM series For 3–8 HP vertical & horizontal engines, tiller application Diameter: 3-1/2", height: 2-3/16"	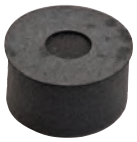
30-941	32906	**Foam Pre-Cleaner** Length: 9", width: 1-3/4" Use with Oregon 30-080 Pre-oiled foam pre-cleaner	
30-117	34340	**Foam Air Filter** Fits TVS75, TVS90, TVS105, & TVS120 Length: 5-1/8", width: 1-1/2", height: 1-5/8" Pre-oiled foam filter	
30-116	34783	**Foam Pre-Cleaner** Length: 5", width: 3-3/4" Use with Oregon® 30-141 Pre-oiled foam filter	
30-951	35404	**Foam Pre-Cleaner** Length: 8-1/2", width: 2" Use with Oregon 30-111 Pre-oiled foam pre-cleaner	
30-952	36357	**Foam Pre-Cleaner** Length: 8", width: 2-7/8" Use with Oregon 30-024 Pre-oiled foam pre-cleaner	

Toro

55-227	43-9730	**Felt Air Filter with Rubber Seal** For handheld blowers Length: 4", width: 2-7/8"	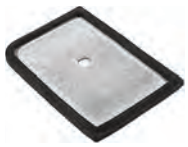
30-959	63-9380	**Foam Air Filter** For 2-cycle Suzuki 1988 and newer models Length: 6-1/2", width: 3-3/8", height: 1-1/8" Pre-oiled foam air filter	

A

Air Filters

OREGON	Replaces	Description	Product Code

Toro

30-954	81-0100	**Foam Air Filter** For 2-cycle Suzuki engine consumer walk-behind mower models prior to 1988 Length: 6-1/2", width: 3-5/8", height: 1-1/4" Pre-oiled foam filter	
30-421	81-4120	**Foam Air Filter** For 4-cycle overhead valve Suzuki engines Length: 7", width: 1-7/8", height: 1-1/8" Pre-oiled foam filter	
30-657	120-4308 127-9193	**Air Filter** – NEW Fits Toro XLS 380 lawn tractor, Timecutter SS3200, SS3216, SS4216, & ZS3200S Length: 6-1/4", width: 2-1/2", height: 3-1/4"	

Wheel Horse

30-430	NN10774	**Air Filter** For 520 tractor and others with Onan engines OD: 8-1/4", ID: 6-3/8", height: 2-1/4" Use with Oregon 30-953 foam pre-cleaner	

Wisconsin

30-102	L0188 John Deere AM100137 Gravely 21333 1446-G1 (EZ-Go)	**Air Filter** OD: 4-1/4", ID: 2", height: 6"	
30-080	L0194A Cub Cadet 385168R2 John Deere AM31400 Kohler 235116 Gravely 010900 Gravely 043954 Tecumseh 32008	**Air Filter** Fits K241, K301, & K321 series For 10, 12, & 14 HP engines OD: 6-1/16", ID: 4-3/4", height: 1-7/8" Use with Oregon® 30-941 foam pre-cleaner	

Wisconsin Robin (Subaru)

30-410	EY2273280317 EY2273280307	**Air Filter** Fits W1-145V, W1-185V For 4 HP & 5 HP 4-cycle engines, Snapper mowers OD: 3-9/16", height: 2-3/8" Top ID: 5/16", Bottom ID: 1-5/16"	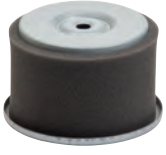
30-412	EY1573620101	**Air Filter** Fits WT1-125V For 4 HP 2-cycle engines, Snapper mowers OD: 3-1/8", ID: 2-1/4", height: 2-1/2" Includes foam pre-cleaner	

A

OREGON	Replaces	Description	Product Code	

Wisconsin Robin (Subaru)

30-413	EY2273261007	**Air Filter** Fits W1-185 For 6 & 8 HP horizontal engines Bottom OD: 4-1/4" Top OD: 2-5/8", height: 2-1/2" Includes foam pre-cleaner		
30-414	EY2063260107	**Air Filter** Fits EY18-3W For 5 HP horizontal engines Bottom OD: 3-1/2" Top OD: 2-1/2", height: 2-1/2" Includes foam pre-cleaner		
30-418	EY2263261007	**Air Filter** Fits WI-145 Top OD: 2" Bottom OD: 3-3/4", height: 2-3/8" Includes foam pre-cleaner		
30-419	EY2073260618	**Air Filter** Fits WI-390, EY25W, & EY27W engines Top OD: 2-1/2" Bottom OD: 4-13/16", height: 3-1/4" Includes foam pre-cleaner		
30-423	EY2343260407	**Air Filter** Fits WI-280 engine Top OD: 2-1/2" Bottom OD: 4-5/8" H: 3-3/8" Includes foam pre-cleaner		
30-713	106-32704-07	**Air Filter** Fits EC-10 & EZ-08 engines OD: 2-3/8", height: 2-1/4" Includes pre-filter		
30-717	RA-263-32610-01	**Air Filter** Fits EH63, EH64, & EH65 OD: 6-13/16", ID: 5-1/2", height: 2-3/8"		
30-650	20B-32610-H7 20B-32610-J7	**Air Filter** – NEW Fits Robin EX35-40 Length: 7-1/4", width: 4-3/16", height: 1"		

A

Air Filters

OREGON	Replaces	Description	Product Code

Wisconsin Robin (Subaru) Foam Filters

30-162	Robin 252-32614-08	**Air Filter** Fits Robin EH122D engine For multiquip tampers OD: 3-5/8", ID: 2-1/2", height: 1-5/8" Includes foam pre-cleaner	
30-924	EY2353261008	**Foam Pre-Cleaner** Length: 7-3/4", width: 2-3/4" Use with Oregon 30-411 Pre-oiled foam pre-cleaner	
30-968	RS227-36002-03	**Foam Air Filter** Fits EY20 engines Length: 4-3/4", width: 3-1/4", height: 1-1/8" Pre-oiled foam air filter	

A

Standard Bearing to Oregon Magnum Bearing

Oregon® Standard Bearing	Oregon Magnum Bearing	Reference Number
45-005 (OBS)	45-256	6203-2RS-3/4
45-032 (OBS)	45-227	6205-2RS
45-033 (OBS)	45-220	6305-2RS
45-054 (OBS)	45-254	6202-1RS
45-126 (OBS)	45-225	RA100R
45-158 (OBS)	45-260	499502H
45-195 (OBS)	45-295	Z9504AB
45-202 (OBS)	45-242	99502H
45-203 (OBS)	45-243	6203-2RS-5/8
45-204 (OBS)	45-259	6204-2RS
45-400 (OBS)	45-257	6203-2RSC3
45-401 (OBS)	45-220	6305-2RS
45-403 (OBS)	45-259	6204-2RS
45-624-0 (OBS)	45-257	6203-2RSC3

Standard Ball Bearings

OREGON	O.D.	I.D.	Reference No.	Width	Product Code
45-025	1.125	0.5	R8-RS	0.313	
45-257	1.574	0.669	6203-2RSC3	0.470	
45-004	32 mm	15 mm	6002-NSL-2RS	0.352	

Tapered Roller Bearings & Races

OREGON	O.D.	I.D.	Reference No.	Width	Product Code
45-205	1.781	0.748	LM11949	0.661	
45-206	1.7812	-	LM11910	0.475	
45-002	1.988	1.000	L44643/L44610	0.608	

Wheel Bearings

OREGON	O.D.	I.D.	Reference No.	Width	Product Code
45-208	1.375	0.563	1622-2BS-NR	0.438	
45-130	1.574	0.669	6203-2RS-NR	0.471	

Caged Roller Bearings

OREGON	O.D.	I.D.	Reference No.	Width	Product Code
45-060	1.375	0.750	–	3.750	
45-014	1.335	0.750	–	2.455	

Extended Race Bearing with Set Screw

OREGON	O.D.	I.D.	Reference No.	Width	Product Code
48-211	1.575	0.625	SB202-10	0.870	
45-048	2.051	0.875	SB205-14	1.100	

Bearings & Bushings

Extended Race

OREGON	O.D.	I.D.	Reference No.	Width	Product Code
45-050	1.850	0.750	SA204-12	0.553	

Oregon® Magnum Ball Bearings

OREGON	O.D.	I.D.	Reference No.	Width	Product Code
45-216	1.102	0.472	6001-2RS	0.315	
45-253	1.260	0.472	6201-2RS	0.394	
45-242	1.374	0.625	99502H	0.430	
45-260	1.375	0.625	99502H	0.431	
45-272	1.375	0.437	1620-2RS	0.437	
45-254	1.378	0.591	6202-1RS	0.433	
45-255	1.378	0.591	6202-2RS	0.433	
45-267	1.380	0.500	1621-2RS	0.437	
45-257	1.568	0.669	6203-2RSC3	0.472	
45-243	1.574	0.625	6203-2RS-5/8	0.471	
45-256	1.574	0.750	6203-2RS-3/4	0.476	
45-241	1.654	0.591	6302-2RS	0.512	
45-268	1.750	0.880	8186-2RS	0.500	
45-295	1.781	0.750	Z9504AB	0.608	
45-244	1.850	0.669	6303-2RS	0.551	
45-259	1.850	0.787	6204-2RS	0.555	
45-227	2.048	0.984	6205-2RS	0.590	
45-264	2.048	0.984	6205-RSTC4	0.590	
45-269	2.000	1.000	1641-2RS	0.560	
45-271	2.000	1.000	8466-2RS	0.560	
45-263	2.046	1.000	RA100RR7	0.707	
45-225	2.046	1.000	RA100RR	0.846	
45-245	2.047	0.787	6304-2RS	0.591	
45-270	2.190	1.450	8276-1RSW	0.630	
45-220	2.437	0.987	6305-2RS	0.670	
45-207	2.440	1.181	6206-2RS	0.625	
45-249	3.937	1.772	6309-2RS	0.984	

Flanged Wheel Bearings

OREGON	O.D.	I.D.	Width	Product Code
45-012	1-3/8	1/2	.527	
45-112	1-1/8	1/2	.435	
45-038	1-3/8	1/2	.487	
45-047	1-3/8	5/8	.487	
45-058	1-3/8	5/8	.521	
45-034	1-3/8	3/4	.523	
45-010	1-3/8	3/4	.487	

Heavy-Duty Flanged Wheel Bearings

OREGON	O.D.	I.D.	Width	Product Code
45-000**	1-3/8	3/4	0.487	
45-234	1-3/8	3/4	0.487	
45-258	1-3/8	5/8	0.487	

** Sealed bearing

OREGON	Replaces	Description	Product Code	

Universal

45-620	K & S 706-16274	**Bearing** For edger shaft Fits 6200ZZ, K & S (Trim-All), & others OD: 1.181", ID: .3939", width: .3543"		
45-205	Ariens 54045 Bolens 1185275 Cub Cadet 651814R1 John Deere JD-8226 Gravely 018446 Gravely 18446 Exmark 1-633585	**Tapered Roller Bearing** Std. No. LM11949 Bore: .748" Use with Oregon® 72-735 & 72-736 wheel assembly		
45-206	Ariens 54044 Bolens 1185276 Cub Cadet 651815R91 John Deere JD-8188 Gravely 018445 Gravely 18445 Exmark 1-633584	**Race** Std. No. LM11910 OD: 1.7812"		
45-019	K & S 706-18796 MTD 706-16276 Velke 3999	**Bushing** For edger shafts, K&S edgers & others, & Velke wheel bushing OD: 3/4", ID: 1/2", width: 3/4", flange OD: 15/16" Thickness: 1/8"		
45-014	Bobcat 38042N Tilden 53-217	**Caged Roller Bearing** Fits Oregon 72-752 & 72-753 for Gravely wheel assembly OD: 1.335", ID: .750", width: 2.455"		
45-015	Bobcat 48250 Exmark 513810 Tilden 53-164	**Bushing** Fits Oregon 72-732 for Gravely wheel assembly OD: 1.383", ID: .750", width: .375" Use with Oregon 45-014		

AMF (See Noma)
Ariens

45-275	05500111	**Flange Bushing** Fits snow throwers friction drive OD: 0.750", ID: 0.625", width: 0.50", flange 0.875"		
45-006	55035 05503500	**Bushing** For snow thrower auger shaft Fits models 924036, 924038, 924039, 924040, 924046, 924048, 924050, 924071, 924072, & 924073 OD: 1.26", ID: 1", width: .624", flange: 1.502" x 1/8"		
45-007	55039 05503900	**Bushing** For snow thrower auger shaft Fits 923001, 923004, 923006, 923014, 923017, 923018, 923019, 923020, 923022, & 923023 OD: 1.003", ID: .732", width: .625", flange: 1.25" x 5/32"		

B

Bearings & Bushings

OREGON	Replaces	Description	Product Code	
Ariens				
45-008	55110 05511000	**Bushing** OD: 3/4", ID: 1/2", width: 5/8", flange: 1" x 1/8"		
45-009	55112 05511200	**Bushing** For snow thrower impeller shaft Fits 924046, 924048, 924050, 924072, 924073, 924071, 924036, 924038, 924039, 924040, & 924074 OD: 1.0016", ID: .753", width: .7531", flange: 1.25" x .125"		
45-013	55030 05503000	**Bushing** Fits models 910 & 924 series OD: 1", ID: 7/8", width: 5/8", flange: 1-1/4" x 1/8"		
45-003	55028 05502800	**Bushing** OD: 1.135", ID: .760", width: .765", flange: 1.325" x .108"		
45-206	54044 05404400	**Race** Use with Oregon® 45-205 roller bearing OD: 1.7812"		
45-205	54045 05404500	**Tapered roller bearing** Fits intermediate mower drive bearing for 38" (1983-89) models 935009, 13, 14, & 20, worm shaft bearing on some front tine and all rear tine tillers, & impeller shaft bearing on snowblowers with cast iron gear case. Use with Oregon 45-206 Bore: .748"		
45-035	54063 05406300	**Bearing** Fits snow thrower input shaft support bearing models 824, 932, & 1032, models in series: 924022, 024, 026, 028, 029, 032, 046, 048, 050, 072, 074, 075, & 079 OD: 1-3/4", ID: 3/4", width: 1/2"		
45-002	54069 05406900	**Tapered Roller Bearing and Race Kit** For tine shaft bearing on rear tine tillers and many front tine models OD: 1.988", ID: 1", width: .608"		
45-267	05408000	**Ball Bearing** Fits self-propelled mower friction drives 1621-2RS OD: 1.38", ID: 0.50", width: 0.437"		
45-000	54089 05408900	**Flanged Wheel Bearing** Fits rear-height adjuster bearing on walk-behind mower model 911013, front-wheel bearings on 1983 thru 1988 tractor models: 934001–004 OD: 1-3/8", ID: 3/4"		

B

OREGON	Replaces	Description	Product Code

Ariens

45-268	05409300	**Ball Bearing** Fits snow thrower auger 8186-2RS OD: 1.75", ID: 0.88", width: 0.50"	
45-269	05416000	**Ball Bearing** Fits self-propelled mower friction drive 1641-2RS OD: 2.00", ID: 1.00", width: 0.56"	
45-010	54162 05416200	**Bearing** For rear-height adjuster bearing on walk-behind mower Fits model 911022 OD: 1-3/8", ID: 3/4"	
45-270	05417700	**Ball Bearing** Fits snow thrower wheel drive 8276-1RSW OD: 2.19", ID: 1.45", width:0.63"	
45-271	05418200	**Ball Bearing** Fits snow thrower auger & drive 8466-2RS OD: 2.00", ID: 1.00", width: 0.56"	
45-272	05435200	**Ball Bearing** Fits snow thrower friction drive 1620-2RS OD: 1.375", ID: 0.437", width: 0.437"	
45-257	54188 05418800	**Bearing** Fits double-aluminum intermediate drive pulley on 93700 series snowblowers OD: 1.574", ID: .669", width: .47"	
45-098	55058 05505800	**Bushing** For wheel OD: 1-3/8", ID: 3/4", width: 3/4"	

AYP / Roper / Sears / EHP

45-079	AYP 625J AYP 66507	**Bushing** OD: 1.375", ID: .75", width: .625"	
45-073	AYP 3366R	**Plastic Flange Bushing** OD: 0.875", ID: .75", width: .75"	

B

Bearings & Bushings

OREGON	Replaces	Description	Product Code

AYP / Roper / Sears / EHP

45-087	AYP 64906	**Bushing** OD: 1.125", ID: .625", width: .75"	
45-205	AYP 1553H	**Tapered Roller Bearing** Use with Oregon® 45-206 ID: .748"	
45-206	AYP 1554H	**Race** Use with Oregon 45-205 OD: 1.7812"	
45-057	AYP 9040H AYP 9040HR AYP 5920H Snapper 1-4483	**Bushing** Fits front wheel on most lawn and garden tractors OD: 1-3/8", ID: 3/4", width: 1"	
45-128	AYP 126847X AYP 102792X AYP 120382X AYP 120754X AYP 126847X AYP 532120754 AYP 123848X	**Bushing** For drag link on front engine riders	
45-257	AYP 110485X AYP 697H	**Bearing** For top bearing in triangle-style quill assembly, Oregon 82-225 Fits Oregon 82-677, 82-678, & 82-691 quill assemblies OD: 1.574", ID: .669", width: .47"	
45-144	AYP 532155106	**Bushing** For steering on many lawn tractors	

Bobcat

45-078	33014A	**Bearing Sleeve** OD: 1", ID: 3/4", width: 1-3/4"	
45-220	35008N Ferris 1520828 Ferris 1520828S	**Bearing** Improved quality precision Fits top & bottom bearing on spindle assembly 6305-2RS OD: 2.4375", ID: .987", width: .670"	

B

Bobcat

OREGON	Replaces	Description	Product Code
45-014	38042N	**Caged Roller Bearing** For models with 61" & 74" decks Fits wheel 48297, Oregon® wheels 72-752 & 72-753 Use with Oregon 45-015 bushing OD: 1.335", ID: .75", width: 2.455"	
45-015	48250	**Wheel Bushing** Use with Oregon 45-014 OD: 1.383", ID: .75", width: .375"	
45-031	148042	**Flanged Wheel Bearing** OD: 2.002", ID: 1.007", width: .671"	
48-320	48053-2A Scag 48100-02	**Bushing** Fits Oregon 48-207 caster support arm OD: 1-1/4", ID: 1", width: 3/4" Flange dia.: 1-5/8", thickness: 1/8"	
48-211	35062B	**Bearing** With lock collar For gearbox support bearing on 36" & 48" variable & 5-speed walk-behinds OD: 1.335", ID: .625", width: .87"	
09-801	64163-14	**Spacer** OD: 1-1/4", ID: 3/4", width: 1/4"	
09-803	64163-22	**Caster Yoke Spacer** OD: 1-3/4", ID: 1", thickness: 1/2"	
09-802	64163-12 303164	**Spacer** For spindle washer OD: 1", ID 5/8", width: 1/4"	
09-804	64163-22A Exmark 303314	**Spacer** For 36" and 48" variable & 5-speed mowers with 9" wheels, 32", 36", 48", & 61" mowers with 280/250-4 wheels Use with front casters on ZTR 61" & 74" riders OD: 1-1/2", ID: .7/8", width: 1/2"	
45-257	48094A Lawn Boy 703275 Gilson 236544	**Bearing** Use in Oregon 82-215 quill assembly OD: 1.574", ID: .669", width: .47"	

B

Bearings & Bushings

OREGON	Replaces	Description	Product Code	
Bobcat				
45-188	43180 Scag 43022	**Spanner Bushing** Fits Oregon® 72-707 & 72-795 wheels OD: 5/8", ID: 1/2", length: 4-1/16"		
45-053	Scag 481769	**Bearing Kit** Fits Oregon 72-795 Bearing: OD: 1-3/8", ID: 5/8", length: 3-1/4" Bushing: OD: 1-3/8", ID: 5/8" Includes open cage bearing and two bushings		
45-121	38273 (bearing) 38274 (retainer)	**Wheel Bearing Kit** Fits Oregon 72-706		
45-063	148042	**Flanged Wheel Bearing** Heavy-Duty For front caster wheels OD: 2", ID: 1", flange OD: 2-1/8", width: 1/2"		
Bunton				
45-220	Bobcat 35008N Ferris 1520828 Ferris 1520828S	**Bearing** Improved quality precision For top & bottom bearing on spindle assembly 6305-2RS OD: 2.4375", ID: .987", width: .670"		
45-242	PL4969	**Bearing** Fits new style mowers OD: 1.374", ID: .625", width .43"		
45-010	PL0941	**Flanged Wheel Bearing** Fits Oregon 72-760 wheel, For 36" through 61" walk-behinds OD: 1.375", ID: .75", width: .487"		
48-211	PL0878 John Deere PT8892	**Bearing** OD: 1.575", ID: 5/8", width: .870"		
09-801	PL0417	**Spacer** For 6" wheel on old style 32", 36", 48", & 52" mowers OD: 1-1/4", ID: 3/4", width: 1/4"		
45-078	PL0458	**Bearing Sleeve** OD: 1", ID: 3/4", width: 1-7/8" Center ID: 3/8", thickness: 1/8"		

B

OREGON	Replaces	Description	Product Code	
Case				
45-000	C-12110	**Flanged Wheel bearing** OD: 1.375", ID: .75", width: .479"		
Country Clipper				
45-227	C-2897 Grasshopper 8332101 Grasshopper 110082 Toro 25-11257	**Bearing** OD: 2.045", ID: .987", width: .600" Also fits Grasshopper model 6372		
Cub Cadet				
45-000	384881-R93	**Flanged Wheel Bearing** OD: 1.375", ID: .75", width: .479"		
45-205	651815R91	**Tapered Roller Bearing** Use with Oregon® 45-206 ID: .748"		
45-206	651814R1	**Race** Use with Oregon 45-205 OD: 1.781"		
45-295	465003R91 470880R91	**Bearing** Spindle bearing for mowers OD: 1.781", ID: .75", width: .6075"		
45-130	941-0563	**Bearing** Fits 6203-2RSNR with snap ring OD: 1.574", ID: .669", width: .471"		
45-276	741-0494	**Flange Bushing** Fits 31A model series snow throwers (1990–2014) OD: 1.16", ID: 1.05"		
45-280	741-0661B 741-0661A 741-0661	**Flange Bearing** Fits 31A model series snow throwers (2000–2014) OD: 1.0", ID: 0.754"		
45-281	741-0662	**Flange Bearing** Fits 31A model series snow throwers (1997–2014) OD: 1.00", ID: 0.75", width: 0.50"		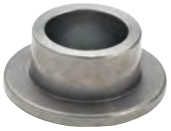

B

Bearings & Bushings

OREGON	Replaces	Description	Product Code	
Cub Cadet				
45-279	741-0663	**Flange Bearing** Fits 31A model series snow throwers (1997–2014) ID: .50", OD: .75", width: 0.925"		
45-278	941-0170 741-0170	**Flange Bearing** Fits 31A model series snow throwers (2012–2014) ID: 1.00" w/ flats		
45-130	941-0563 741-0563	**Bearing** Fits 31A snow throwers (1990–2014) OD: 1.576'', ID: 0.669", width: 0.473" Reference No.: 6203-2RSNR with snap ring		
Dixon				
45-295	6011	**Bearing** Spindle bearing for mowers OD: 1.781", ID: .75", width: .6075"		
45-058		**Flanged Wheel Bearing** Fits Dixon wheel 1022, Oregon® 72-765 OD: 1.375", ID: .625", width: .521"		
45-225	1701 John Deere JD8597 Dixie Chopper 30218	**Bearing** For spindle assembly Fits 30", 40", & 50" ZTR chain drive OD: 52 mm, ID: 1", width: 21.50 mm Prior to 1999, 2.046" x 1", No. RA100-RR		
Excel (see Hustler) **Encore**				
45-127	363007 Exmark 303044 Scag 48100-01 Snapper 7-6514	**Bushing** For caster support arm Fits Oregon 48-203 & steering-shaft bushing for pivot wheel on 12, 13, & 17 HP Turf Runner Flange OD: 1-1/2", OD: 1-1/8", ID: 7/8", length: 1"		
45-031	363187	**Flanged Wheel bearing** Fits Encore wheel 362048 OD: 2.002", ID: 1.007", width: .671"		
45-220	Bobcat 35008N Ferris 1520828 Ferris 1520828S	**Bearing – Heavy-Duty** Improved quality & precision for spindles For top & bottom bearing on spindle assembly OD: 2.4375", ID: .987", width: .670" Reference No.: 6305-2RS		

B

Exmark

OREGON	Replaces	Description	Product Code
45-015	513810	**Bushing** Fits wheel 45205, Oregon® 72-732 Use with Oregon 45-014 OD: 1.383", ID: .75", width: .375"	
09-802	303164 Bobcat 64163-12 Bobcat 303164	**Bushing** OD: 1", ID: 5/8", width: 1/4"	
09-804	303314 Bobcat 503314 Bobcat 64163-22A	**Spacer** For 36" & 48" variable and 5-speed mowers with 9" wheels, & 32", 36", 48", & 61" mowers with 280/250 4 wheels. Use with front casters on ZTR 61" & 74" riders OD: 1-1/2", ID: 7/8", width: 1/2"	
45-127	303044 Encore 363007 Scag 48100-01 Snapper 7-6514	**Bushing** For caster support arm & pivot-wheel steering shaft on 12, 13, & 17 HP Turf Runner Fits Oregon 48-203 Flange OD: 1-1/2", OD: 1-1/8", ID: 7/8", length: 1"	
45-040	513336	**Bushing** For Turf Ranger deck support OD: 1.25", ID: 15/16", width: 11/16"	
45-205	633585	**Tapered Roller Bearing** Fits intermediate mower drive bearing on 38" models 935009, 13, 14, & 20 (1983–1989) For worm-shaft bearing on some front tine and all rear tine tillers & impeller-shaft bearing on snowblowers with cast iron gear case Use with Oregon 45-206 Bore: .748	
45-206	Ariens 54044	**Race** Use with Oregon 45-205 roller bearing OD: 1.7812"	
48-211	303067	**Bearing** For gearbox support bearing on 36" & 48" variable speed mowers OD: 1.575", ID: .625", width: .870"	
45-220	303057 303543 Bobcat 35008N Ferris 1520828 Ferris 1520828S	**Bearing – Heavy-Duty** Improved quality & precision for spindles For top & bottom bearing on spindle assembly OD: 2.4375", ID .987", width: .670" 6305-2RS	
45-030	303044 BB196-369 Kees 393194 Snapper 7-6514	**Bushing** For caster yoke support arm Fits Viking, Explorer, Turf Tracer, Turf Ranger and Metro series Flange OD: 1.5", OD: 1.128", ID: .8821", length: 1.250"	

B

Bearings & Bushings

OREGON	Replaces	Description	Product Code	
Exmark				
45-038	631560 513009	**Flanged Wheel Bearing** OD: 1-3/8", ID: 1/2"		
45-060	513809	**Caged Roller Bearing** OD: 1-3/8", ID: 3/4", length: 3-3/4"		
Ferris				
45-220	1520828 1520828S Bobcat 35008N Exmark 303057 Exmark 303543	**Bearing – Heavy-Duty** Improved quality & precision for spindles For top & bottom bearing on spindle assembly OD: 2.4375", ID: 987", width: .670" Reference No.: 6305-2RS		
Grasshopper				
45-404	122044	**Pillow Block Bearing** Fits 700 & 800 series models ID: 1.004", length: 5.490"		
45-258	120050	**Flanged Wheel Bearing** Fits wheels 603924, 483803, 483861, Oregon® 72-770, & 72-771, wheel bearing on decks 9048, 9052, 9061, & 6372, & tail wheel bearing on Gemini 700-series OD: 1-3/8", ID: 5/8", width: .487"		
45-227	833210 Country Clipper 110082 Toro 25-11257	**Bearing** Fits model 6372 OD: 2.045", ID: .987", width: .600" Reference No.: C-28971		
45-225	120081 Dixon 1701 John Deere JD8597 Dixie Chopper 30218	**Bearing – Heavy-Duty** For spindle assembly Fits 30", 40" and 50" ZTR chain drive OD: 52mm, ID: 1", width: 21.50 mm OD: 2.046", ID: 1" (1999 & older) Reference No.: RA100-RR		
45-047	120050 MTD 741-0569	**Flanged Wheel Bearing** Single seal OD: 1-3/8, ID: 5/8, width: .463" Can use with Oregon 45-258 heavy-duty bearing		
45-831	282575	**Deck Mount Bushing** Plastic bushing For front mount decks (1995 & newer) ID: 3/8", width: 3/4", length: 1-5/8", tall: 1-1/4"		

B

OREGON	Replaces	Description	Product Code

Grasshopper

45-002	38199	**Bearing and Race Kit** For spindle bearing on 36", 40", & 50" mowers OD: 1.988", ID: 1", width: .608"	
45-010	36778 11193	**Flanged Wheel Bearing** Fits wheel 37797, Oregon® 72-780 OD: 1.375", ID: .75", width: .487"	

Gravely

45-014		**Caged Roller Bearing** Fits wheel bearing 45-205, Oregon 72-732 For Pro 36", 40", 50", & 60" mowers, 200 & 300 series walk-behinds Use with Oregon 45-015 OD: 1.335", ID: .75", length: 2.455"	
45-015		**Bushing** Fits wheel 45205 & Oregon 72-732 Use with Oregon 45-014 OD: 1.383", ID: .75", width: .375"	
45-205	18446 Gilson 1140 Lawn Boy 700417	**Tapered Roller Bearing** For tiller gear boxes Use with Oregon 45-206 ID: .748"	
45-206	18445 Gilson 1044 Lawn Boy 700418	**Race** For tiller gear boxes Use with Oregon 45-205 OD: 1.7812"	
45-267	05408000	**Ball Bearing** Fits self-propelled mower friction drive 1621-2RS OD: 1.38", ID: 0.50", width: 0.437"	
45-269	05416000	**Ball Bearing** Fits self-propelled mower friction drive 1641-2RS OD: 2.00", ID: 1.00", width: 0.56"	

Honda

45-004	96150-60020-10 Code 0876904	**Bearing** For all commercial mowers OD: 32 mm, ID: 15 mm Bearing is pressed in on both sides of wheel and held by stop	
45-295	91102-VA4-0003 Code 1688217	**Spindle Bearing** OD: 1.781", ID: .75", width: .6075"	

B

Bearings & Bushings

OREGON	Replaces	Description	Product Code	
Hustler (Excel)				
45-064	39677	**Flanged Wheel Bearing** Heavy-Duty For front caster wheels OD: 1-3/4", ID: 3/4", flange OD: 1-7/8", width: 1/2"		
45-065	786103	**Flanged Wheel Bearing** Heavy-Duty For front caster wheels OD: 1-3/8", ID: 3/4", flange OD: 1-1/2", width: 3/4"		
45-066	631560	**Flanged Wheel Bearing** Heavy-Duty For front caster wheels OD: 1-3/8", ID: 1/2", flange OD: 1-1/2", width: 1/2"		
Ingersoll				
45-207	C29735	**Bearing** For PTO clutch		
Jacobsen				
48-211	551849	**Bearing** For spindle bearing on 36" & 48" Crew Chief & Crew King mowers OD: 1.575", ID: .625", width: .87"		
45-220	552184 Exmark 303057 Exmark 303543 Bobcat 35008N Ferris 1520828 Ferris 1520828S	**Bearing – Heavy-Duty** Improved quality & precision for spindles For top & bottom bearings on spindle assembly OD: 2.4375", ID: .987", width: .670" Reference No.: 6305-2RS		
45-227	310427 345050 Toro 25-11257 John Deere M63810 Grasshopper 833210 Grasshopper 110082 Country Clipper C-28971	**Bearing** Fits model 6372 OD: 2.045", ID: .987", width: .600" Reference No.: 6205-2RS		
45-207	350759	**Bearing** For Turfcat 72 OD: 2.44", ID: 1.181" Reference No.: 6206-2RS		
45-205	500534 Gilson 1140 Lawn Boy 700417	**Tapered Roller Bearing** For tiller gear boxes Use with Oregon® 45-206 ID: .748"		

B

OREGON	Replaces	Description	Product Code

Jacobsen

45-295	375882 John Deere JD9296	**Bearing** For spindles on mowers up to 48" OD: 1.781", ID: .750", width: .610" Reference No.: Z9504AB Use Oregon® 45-402 for heavy-duty applications (FAFNIR)	

John Deere

45-206	JD-8188	**Race** OD: 1.7812" Reference No.: LM11910	
45-205	JD-8226	**Tapered Roller Bearing** Use with Oregon 72-735 & 72-736 wheel assembly Bore: .748" Reference No.: LM11949	
45-295	JD9296 JD9239	**Bearing** Fits spindles on mowers up to 48" cut (1988 & older) OD: 1.781", ID: .750", width: .610" Reference No.: Z9504AB Use Oregon 45-402 for heavy-duty applications (FAFNIR)	
45-000	AM35443 AM118315 Snapper 1-5474	**Flanged Ball Bearing** For screw machine Use in Oregon 51-000 OD: 1-3/8", ID: 3/4"	
45-227	M63810 M88251 Jacobsen 345050 Jacobsen 310427 Toro 25-11257 Grasshopper 833210 Grasshopper 110082 Country Clipper C-28971	**Bearing** Fits model 6372 OD: 2.045", ID: .987", width: .600" Reference No.: 6205-2RS	
45-003	E16522	**Bushing** For wheel bushing on 65, 66, & 68 series riders, 8, 50, & 80 series dump carts, arm bushing for 50", 160, & 260 rear-mount 3 pt. hitch mowers OD: 1.135", ID: .75", width: .75"	
45-002	JD8253 JD8933	**Bearing and Race Kit** For gearbox on Model 160 rear mower (up to SN# 505035), bearing on 47" snowblower, model 60 mower, model 400 tractors, & main gear case on 2-stage snowblower OD: 1.988", ID: 1.00", width: .608"	
45-242	M47144 PT8891	**Bearing** Edger shaft bearing for model 2, 3 and 3K edgers ID: .625", OD: 1.374", Width: .43"	

B

Bearings & Bushings

OREGON	Replaces	Description	Product Code	

John Deere

45-010	PT8894	**Flanged Wheel Bearing** For wheel PT8639 & Oregon® 72-760 OD: 1.375", ID: .75", width: .487"		
48-320	M83541	**Bushing** For caster arm bushing on commercial mowers OD: 1.25", ID: 1.00", width: .75"		
09-801	PT8886	**Spacer** For yoke spacer on early 32", 36", 48", & 52" mowers with 6" wheel assembly OD: 1-1/4", ID: .75", width: 1/4"		
45-220	JD9299, M77534 JD4467 Bobcat 35008N Scag 48101-02 Jacobsen 552184 Exmark 303543 Ferris 1520828 Exmark 303057	**Bearing - Heavy-Duty** Improved quality & precision for spindles For top & bottom bearing on spindle assembly OD: 2.4375", ID: .987", width: .670" Reference No.: 6305-2RS		
45-225	JD8597 8597 Grasshopper 120081 Dixon 1701 Dixie Chopper 30218	**Bearing** For spindle assembly, 30", 40", & 50" ZTR chain drive OD: 52 mm, ID: 1", width: 21.50 mm Reference No.: RA100-RR (1999 & older)		

K & S

45-620		**Bearing** For edger shaft bearing OD: 1.181", ID: .3939", width: .3543"		
45-019	706-18796	**Bushing** For edger shafts OD: 3/4", ID: 1/2", width: 3/4", flange OD: 15/16" Thickness: 1/8" Use on K&S edgers and others, Velke wheel bushing		

Lawn Boy / Gilson

45-257	703275 700479 Gilson 236544	**Bearing** Fits Oregon 82-215 quill assembly OD: 1.574", ID: .669", width: .47"		
45-205	700417 Gilson 1140	**Tapered Roller Bearing** Fits Oregon 45-206 For tiller gear boxes ID: .748"		

B

OREGON	Replaces	Description	Product Code	
Lawn Boy / Gilson				
45-206	700418 1044	**Race** Fits Oregon® 45-205 For tiller gear boxes OD: 1.7812"		
45-002	703809 703210 1045 1046	**Bearing and Race kit** For tiller gear boxes OD: 1.988", ID: 1.00", width: .608"		
45-112		**Flanged Wheel Bearing** Fits Oregon 72-500 & 72-508 wheels OD: 1.125", ID: .500", width: .435"		
Little Wonder				
45-130	124	**Bearing** OD: 1.574", ID: .669", width: .471" Reference No.: 6203-2RSNR with snap ring		
McLane				
45-242	2036	**Bearing** For edger shaft bearing OD: 1.375", ID: .625", width: .43"		
MTD				
45-019	706-16276 3999 K & S 706-18796	**Bushing** For edger shafts OD: 3/4", ID: 1/2", width: 3/4", flange OD: 15/16" Thickness: 1/8" Use on K & S edgers and others, Velke wheel bushing		
45-242	741-0155 941-0155	**Bearing** Fits upper wheel drive case bearing on 430 & 437 tillers, shaft bearing for 586 edger, upper chain case bearing on 030 & 406 rear tine tiller, 99502H OD: 1.375", ID: .625", width: .43"		
45-100	741-0225 941-0225	**Bushing** Fits 820–829 & 840–849 mowers For deck-lift pivot Hex OD: 7/8", hex ID: 5/8", hex width: 5/8" Flange OD: 1-7/64", thickness: 1/8"		
45-095	741-0313 741-0487 941-0487A	**Bushing** Fits steel wheel on 645, 648, 650, & 651 shredders OD: 53/64", ID: 21/32", width: 1" Flange OD: 1-3/64"		

B

Bearings & Bushings

OREGON	Replaces	Description	Product Code	
MTD				
45-276	741-0494	**Flange Bushing** Fits 31A model series snow throwers (1990–2014) OD: 1.16", ID: 1.05"		
45-280	741-0661B 741-0661A 741-0661	**Flange Bearing** Fits 31A model series snow throwers (2000–2014) OD: 1.0", ID: 0.754"		
45-281	741-0662	**Flange Bearing** Fits 31A model series snow throwers (1997–2014) OD: 1.00", ID: 0.75", width: 0.50"		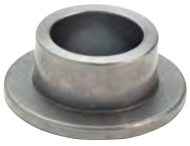
45-279	741-0663	**Flange Bearing** Fits 31A model series snow throwers (1997–2014) ID: .50", OD: .75", width: 0.925"		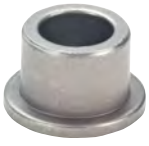
45-278	941-0170 741-0170	**Flange Bearing** Fits 31A model series snow throwers (2012–2014) ID: 1.00" w/ flats		
45-130	941-0563	**Bearing** OD: 1.574", ID: .669", width: .471" Reference No.: 6203-2RSNR with snap ring		
45-000	941-0141 Snapper 1-5474	**Flanged Wheel Bearing** Fits Oregon® 51-000 OD: 1-3/8", ID: 3/4"		
45-094	748-0169 948-0169	**Bushing** OD: 1", ID: 3/4", width: 1-15/16" Flange OD: 1-1/8"		
45-088	748-0227 748-0227A 948-0227A	**Bushing** Fits lower wheel drive bearing for model 020, 030, & 406 tiller models, lower chain case, & 603 edger OD: 3/4", ID: 5/8", flange OD: 1-1/8"		

B

OREGON	Replaces	Description	Product Code	
MTD				
45-833	941-0475 741-0475	**Flanged Bushing** For riders on steering & snow thrower auger and chute assembly OD: 1/2", ID: 3/8", width: 3/8", flange OD: 5/8" Thickness: 3/32"		
45-045	741-0523 941-0523	**Bushing** Fits pivot bar bushing for 800-series tractors ID: 3/4"		
45-046	741-0659 941-0659	**Flanged Bushing** Fits pivot bar bushing for 600-series OD: 15/16", ID: 5/8"		
45-112	941-0484 741-0484	**Flanged Wheel Bearing** Single seal OD: 1-3/8, ID: 1/2, width: .435		
45-047	741-0569 941-0569 Grasshopper 120050	**Flanged Wheel Bearing** With single seal OD: 1-3/8, ID: 5/8, width: .463 Can use Oregon® 45-258 heavy-duty bearing		
45-075	941-0706	**Flanged Bushing with Grease Zerk** For front wheels on riders OD: 13/16". ID: 5/8", flange OD: 1-1/16", length: 1"		
72-080	941-0706	**Flanged Wheel Bushing - NEW** OD: 1", ID: 5/8", Width: 1"		
45-091	748-0855 Toro 2119-127 Jacobsen 545549	**Flanged Bushing** OD: 3/4", ID: 5/8", width: 1" Flange OD: 1-1/4"		
45-092	741-0293 941-0293 748-0143	**Flanged Plastic Bushing** OD: 1", ID: 25/32", flange OD: 1-1/4"		
45-082	741-0199 741-0490 941-0490 748-0151	**Flanged Plastic Bushing** OD: 1-1/4", ID: 3/4", flange OD: 1-3/8"		

B

Bearings & Bushings

OREGON	Replaces	Description	Product Code	
MTD				
45-113	731-0374 AF43632	**Flanged Bushing** Fits lower chain case bearing on Model 406 rear tine tiller, front tine tillers 5 & 8 HP OD: 1-1/4", ID: 1", width: 1" Flange OD: 1-1/2"		
45-257	741-0124 941-0124	**Bearing** Fits blade shaft bearing on edgers models 603 & 620 OD: 1.574", ID: .669", width: .47"		
45-037	741-0404 941-0404 741-0136	**Needle Bearing** For variable speed pulley, lawn tractors OD: 3/4", ID: 9/16", width: 9/16"		
45-070	741-0312 941-0312	**Flanged Plastic Bushing** For front wheel bushing on large frame tractors Fits 16 x 650-8 wheel assemblies OD: 1-1/4", ID: 3/4", width: 1-1/8", flange OD: 1-1/2"		
45-071	941-0656	**Hex Bushing** OD: 7/8", ID: 5/8", length: 1/4"		
45-072	941-0660	**Bushing** OD: 3/4", ID: 1", length: 1"		
45-074	741-0990A	**Flanged Bushing with Grease Zerk** For front wheels on riders OD: 1", ID: 3/4", flange OD: 1-3/8", length: 1-3/8"		
45-834	941-04136B 741-04136B 741-04136A 741-04136	**Flanged Plastic, Split-Hex Bushing** For front axle of self-propelled mowers with quick wheel height adjuster Hex: 3/4", ID: 1/2", opening width: 7/16" Flange dia. 1", thickness: 1/8"		
45-277	948-0108 748-0108 748-0269	**Flange Bearing** Fits 31A model series snow throwers (1985–2013) OD: 0.75", ID: 0.503"		
Murray				
45-257	2055 AMF/Noma 49562	**Bearing** Fits OEM quill assemblies & Oregon® 82-493 & 82-514 OD: 1.574", ID: 660", width: .472" Reference No.: 6203-2RS		

B

OREGON	Replaces	Description	Product Code	
Murray				
45-022	56105 24368	**Plastic Bushing** For front wheels on riders OD: 1-3/8", ID: 5/8", width: 11/16"		
45-242		**Bearing** Fits Oregon® 82-243 spindle assembly 99502H OD: 1.374", ID: .625", width: .430"		
45-243		**Bearing** Fits Oregon 82-243 spindle assembly OD: 1.574", ID: .625" Reference No.: 6203-2RS-5/8		
45-087	24615	**BushIng** Impregnated with graphite OD: 1-1/8", ID: 5/8", width: .75"		
45-023	93064	**Plastic Bushing** For front wheel bushing on 18 HP lawn tractors OD: 1.375", ID: .875", width: .625"		
45-043	91334 24367 491334	**Bushing** For front wheel bearing on tractors		
82-244	24532 91903	**Spacer Bushing** Fits Oregon 82-243 quill assembly OD: .75", ID: 625", width: 1.733"		
45-250		**Bearing and Spacer Kit** For Murray tractors and riders Fits Oregon 82-243 & 82-250 spindles		
Noma/AMF				
45-257	49562	**Bearing** Fits Oregon 82-493 & 82-514 For OEM quill assemblies OD: 1.574", ID: 660", width: .472" Reference No.: 6203-2RS		
45-098	40195	**Flanged Bushing** OD: 1-3/8", ID: 3/4", width: 3/4" Flange OD: 1-9/16"		
45-079	39979	**Flanged Bushing** For front wheel OD: 1-3/8", ID: 3/4", width: 5/8"		

B

Bearings & Bushings

OREGON	Replaces	Description	Product Code

Scag

45-002	48668 48005-04 48005-05	**Bearing and Race Kit** For bearing on new style blade spindle assemblies Fits rear wheel bearing on rider models ST12B, 13K, 17KA, & 18KH	
45-257	48102	**Bearing** Fits transmission idler pulley bearing on ST12B, 13K, 17KA, & 18KH riders, idler bearing on SM48, SM61, & SM72 decks OD: 1.574", ID: .669", width: .47"	
45-242	48224	**Bearing** For jackshaft bearing on belt drive walk-behind models & neutral return bearing on zero turn models OD: 1.374", ID: .625", width: .43"	
45-220	48101-02 Bobcat 35008N Exmark 303057 Exmark 303543 Ferris 1520828 Ferris 1520828S Jacobsen 552184 John Deere JD4467 John Deere JD9299 John Deere M77534	**Bearing – Heavy-Duty** Improved quality & precision for spindles For top & bottom bearing on spindle assembly OD: 2.4375", ID: .987", width: .670" Reference No.: 6305-2RS	
48-320	48100-02	**Flanged Bushing** Use with Oregon® 48-203 caster arm OD: 1.25", ID: 1", width: 75", flange OD: 1.765"	
45-031	48193-01	**Flanged Wheel Bearing** For wheel bearing on Scag belt drive, walk-behinds Use with Oregon 48-303 Will not fit wheels requiring 1.984" OD, check before ordering OD: 2.002", ID: 1.007", width: .671"	
45-127	48100-01 Encore 363007 Exmark 303044 Snapper 7-6514	**Flanged Bushing** For caster support arm & steering shaft bushing for pivot wheel on 12, 13, & 17 HP Turf Runner Use with Oregon 48-203 OD: 1-1/8", ID: 7/8", width: 1", flange OD: 1-1/2"	

Simplicity

45-003	156316	**Flanged Bushing** Fits wheels on 3100, 4200, 5200, & 6500 riders OD: 1.135", ID: .75", width: .75"	
45-242	1665521	**Bearing** OD: 1.375", ID: .625", width: .43"	

B

OREGON	Replaces	Description	Product Code	
Simplicity				
45-295	108202	**Bearing** OD: 1.781", ID: .75", width: .6075"		
45-257	1666292 1705897 Toro 38-7820	**Bearing** Fits auger shaft bearing on S-200, 620, & CCR2000 snow throwers OD: 1.574", ID: .669", width: .47"		
Snapper				
45-010	1-0570 1-0943 1-1807	**Flanged Wheel Bearing** Fits 5-0618 wheel assembly & Oregon® 72-728 wheel		
45-000	1-5474 26693	**Flanged Wheel Bearing** Screw machine bearing Use with Oregon 51-000 OD: 1-3/8", ID: 3/4"		
45-030	303044 7-6514 Exmark 303514 Kees 393194	**Bushing** For caster yoke support arm Fits Viking, Explorer, Turf Tracer, Turf Ranger, & Metro series OD: 1.128", ID: .8821", length: 1.250", flange OD: 1.5"		
45-220	Bobcat 35008N Exmark 303057 Exmark 303543 Ferris 1520828 Ferris 1520828S Jacobsen 552184 John Deere JD4467 John Deere JD9299 John Deere M77534 Scag 48101-02	**Bearing – Heavy-Duty** Improved quality & precision for spindles For top & bottom bearing on spindle assembly OD: 2.4375", ID: .987", width: .670" Reference No.: 6305-2RS		
45-208	1-8767	**Bearing** Oregon 79-605 & 79-610 height adjusters For all self-propelled models OD: 1.375", ID: .5625", width: .4375"		
45-080		**Bushing** For plastic wheel OD: 5/8", ID: 1/2"		
45-107	5-0918	**Bearing** For rear axle, left side Fits 26–33" riders Lg. OD: 1.750", sm. OD: 1.6255", ID: 3/4" Width: 1.7506"		

B

Bearings & Bushings

Snapper

OREGON	Replaces	Description	Product Code
45-209	1-2304 2-8014	**Bearing** For hex shaft, 21" self-propelled mowers OD: 1", ID: 3/8", width: 5/16"	
45-242	7-7324 1-4514 204-020 (Yazoo)	**Bearing** ID: .625", OD: 1.374", width: .43"	
45-227	7-9813 Country Clipper C-28971 Grasshopper 110082 Grasshopper 833210 Jacobsen 310427 Jacobsen 345050 John Deere M63810 John Deere M88251 Toro 25-11257	**Bearing** Fits model 6372 OD: 2.045", ID: .987", width: .600" Reference No.: 6205-2RS	
45-081	1-0986	**Bushing** For king pin OD: 13/16", ID: 49/64", width: 43/64"	
45-083	1-3321 1-0743 1-1099 1-1100	**Bushing** For plastic tie rod OD: 1/2", ID: 25/64", width: 25/64"	
45-295	1-0696 1-3313 5-4073	**Bearing** For spindle bearing on riding mowers OD: 1.781", ID: .75", width: .607"	
48-211	7-6504	**Bearing** Fits older style single belt drive 32", 36", & 48" walk-behinds, & transmission shaft support bearing OD: 1.575", ID: .625", width: .87"	
48-206	1-1048	**Bushing** For shift yoke on rear engine riders	
45-127	7-6514 Kees 363194	**Bushing** For caster yoke support OD: 1.125", ID: .885", width: 1"	

B

Toro

OREGON	Replaces	Description	Product Code	
45-242	251-207 204-020 (Yazoo)	**Bearing** OD: 1.374", ID: .625", width: .43"		
45-227	25-11257 Country Clipper C-28971 Grasshopper 110082 Grasshopper 833210 Jacobsen 310427 Jacobsen 345050 John Deere M63810 John Deere M88251 Snapper 7-9813	**Bearing** Fits model 6372 OD: 2.045", ID: .987", width: .600" Reference No.: 6205-2RS		
45-002	46-8530	**Bearing and Race Kit** Fits 36", 44", & 52" spindles OD: 1.988", ID: 1", race width: .418" Brg. width: .608"		
45-000	251-210 1210 Wheel Horse 110513	**Flanged Wheel bearing** For rear engine riders ID: .75", OD: 1.375", width: .479"		
45-257	38-7820	**Bearing** Fits auger shaft bearing on S-200, 620, & CCR2000 snow throwers OD: 1.574", ID: .669", width: .47"		
45-018	113514	**Bearing** Sealed one side Spindle bearing for 50" & 60"side discharge mowers on tractors OD: 2.0472", ID: .9843", width: .5906"		
45-031	251-299 Exmark 32329	**Flanged Wheel Bearing** For commercial mowers (1986 & older) Year identified by 1st digit of serial number OD: 2.002", ID: 1.007", width: .671"		
45-025	52-2450 251-257	**Bearing** For all 21" commercial mowers OD: 1.125", ID: .500", width: .312"		
45-266	110-8837	**Caster Wheel Bearing Kit** For Z Master mowers (2007–2008) Includes bearing cones, bearing cups, bearing spacers, & bearing seals		

Bearings & Bushings

OREGON	Replaces	Description	Product Code	
Yazoo				
45-242	204-020	**Bearing** OD: 1.374", ID: .625", width: .43"		
45-243	204-019	**Bearing** OD: 1.574", ID: .625", width: .471"		
45-295	204-060	**Bearing** For spindle bearing on old style 60" & 72" mowers OD: 1.781", ID: .750", width: .6075"		

Can't find what you're looking for?
Try us online to search the latest products available.

OregonProducts.com

Bushings by Type

OREGON	Type	ID	OD	Width	Flange OD	Material	Product Code
45-083	1	.390	.500	.390	1.600	Plastic	
45-080	1	.500	.625	.650	.760	Plastic	
45-008	1	.500	.750	.625	1.000	Bronze	
45-019	1	.500	.750	.750	.938	Bronze	
45-091	1	.628	.752	1.000	1.250	Bronze	
45-095	1	.656	.828	1.000	1.046	Plastic	
45-046	1	.660	.945	1.000	1.250	Plastic	
45-007	1	.750	1.000	.632	1.250	Bronze	
45-094	1	.750	1.000	1.933	1.125	Bronze	
45-015	1	.750	1.383	.375	1.550	Oilite	
45-081	1	.765	.813	.672	1.250	Plastic	
45-045	1	.780	1.070	.940	1.385	Plastic	
45-092	1	.781	1.000	.750	1.250	Plastic	
45-013	1	.879	1.000	.645	1.250	Bronze	
45-127	1	.885	1.125	1.000	1.500	Oilite	
45-006	1	1.000	1.125	.624	1.502	Bronze	
48-320	1	1.000	1.250	.750	1.625	Bronze	
45-113	1	1.000	1.250	1.000	1.500	Plastic	
45-057	2	.750	1.375	1.000	1.550	Oilite	
45-098	2	.750	1.375	.750	1.500	Oilite	
45-040	2	.938	1.250	.688	1.500	Plastic	
45-100	3	.625	.875	.625	1.109	Plastic	
45-088	3	.625	1.000	.625	1.125	Bronze	
45-082	4	.750	1.250	.750	1.375	Plastic	
45-009	5	.753	1.000	.753	1.250	Bronze	
45-030	5	.882	1.128	1.250	1.500	Bronze	
45-087	6	.625	1.128	.750	1.315	Oilite	
45-003	6	.750	1.135	.750	1.325	Oilite	
45-079	6	.750	1.375	.625	1.500	Oilite	
45-078	8	.750	1.000	1.780	n/a	Bronze	
78-101	9	.375	.669	.500	n/a	Steel	
78-100	9	.500	.669	.500	n/a	Steel	
82-244	9	.625	.750	1.733	n/a	Steel	
09-802	9	.625	1.000	.250	n/a	Steel	
48-141	9	.625	1.500	.500	n/a	Steel	
09-801	9	.750	1.250	.250	n/a	Steel	
09-804	9	.882	1.500	.500	n/a	Steel	
09-808	9	1.000	1.750	.250	n/a	Steel	
45-022	11	.625	1.375	.688	1.550	Plastic	
45-023	11	.900	1.375	.925	1.550	Plastic	
45-128	14	.387	.511	.470	.790	Plastic	
45-073	15	.750	.875	.750	1.000	Plastic	
45-071	16	.625	.875	.240	1.100	Oilite	

Type 1

Type 2

Type 3

Type 4

Type 5

Type 6

Type 9

Type 8

Type 11

Type 13

Type 14

Type 15

Type 16

B

Belts by Size

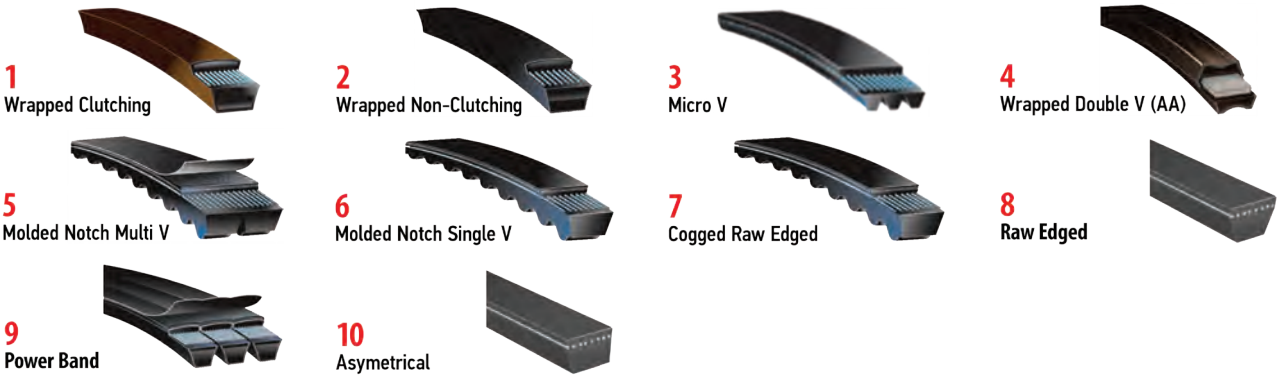

For all Oregon® belts, the outside circumference (OC) is the length listed. A belt measurer, like the Oregon 75-910, can be used to determine this dimension. For belts with an OC longer than 100" or those with non-standard backs (like the Oregon 75-068), use a tape measure wrapped around the outside of the belt to determine the length.

OREGON	Length	Width	Type
75-A14	16	1/2	Poly
75-A15	17	1/2	Poly
75-418	18	1/2	Aramid
75-A16	18	1/2	Poly
75-419	19	1/2	Aramid
75-A17	19	1/2	Poly
75-120	19-1/4	1/2	1
75-320	20	3/8	Aramid
75-123	20	1/2	1
75-420	20	1/2	Aramid
75-A18	20	1/2	Poly
75-059	20-3/8	6-rib	3
75-321	21	3/8	Aramid
75-421	21	1/2	Aramid
75-A19	21	1/2	Poly
15-603	21-1/2	3/8	
75-685	21-3/4	1/2	1
75-322	22	3/8	Aramid
75-422	22	1/2	Aramid
75-A20	22	1/2	Poly
75-B19	22	5/8	Poly
75-686	22-1/4	1/2	1
75-354	22-1/2	4-rib	3
75-323	23	3/8	Aramid
75-423	23	1/2	Aramid
75-A21	23	1/2	Poly
75-B20	23	5/8	Poly
15-845	23-7/16	7/16	7
75-324	24	3/8	Aramid
75-424	24	1/2	Aramid
75-A22	24	1/2	Poly
75-B21	24	5/8	Poly
75-278	24-1/4	1/2	1
75-938	24-7/16	1/2	6
15-580	24-1/2	1/2	
75-325	25	3/8	Aramid
75-508	25	3/8	1
75-425	25	1/2	Aramid
75-A23	25	1/2	Poly

OREGON	Length	Width	Type
75-525	25	5/8	Aramid
75-B22	25	5/8	Poly
75-353	25-1/2	3/8	6
15-425	25-5/8	7/16	
15-268	26	3/8	7
75-326	26	3/8	Aramid
15-267	26	1/2	
75-426	26	1/2	Aramid
75-A24	26	1/2	Poly
75-B23	26	5/8	Poly
15-398	26	21/32	
15-604	27	3/8	7
75-327	27	3/8	Aramid
75-427	27	1/2	Aramid
75-A25	27	1/2	Poly
75-527	27	5/8	Aramid
75-B24	27	5/8	Poly
75-067	27-1/4	1/4	2
15-577	27-1/4	3/4	10
15-001	27-5/8	1/2	2
15-221	27-3/4	1/4	8
75-328	28	3/8	Aramid
75-428	28	1/2	Aramid
75-A26	28	1/2	Poly
75-528	28	5/8	Aramid
75-B25	28	5/8	Poly
75-010	28-1/4	1/2	1
15-331	28-3/8	3/8	
15-002	28-3/8	1/2	6
15-844	28-3/8	3/4	7
15-939	28-15/16	21/32	
75-329	29	3/8	Aramid
75-429	29	1/2	Aramid
75-A27	29	1/2	Poly
75-529	29	5/8	Aramid
75-B26	29	5/8	Poly
15-333	29-1/8	3/4	10
75-380	29-3/16	5/8	2

OREGON	Length	Width	Type
75-225	29-1/4	3/8	8
15-784	29-3/8	7/16	
115-223	29-1/2	1/2	1
75-330	30	3/8	Aramid
75-980	30	3/8	6
75-430	30	1/2	Aramid
75-A28	30	1/2	Poly
75-530	30	5/8	Aramid
75-B27	30	5/8	Poly
75-065	30-1/4	1/2	1
75-101	30-1/4	1/2	1
75-091	30-5/16	3/8	1
15-290	30-7/16	21/32	
15-051	30-9/16	1/2	8
15-744	30-3/4	3/8	
15-590	31	3/8	7
75-331	31	3/8	Aramid
15-645	31	1/2	
75-431	31	1/2	Aramid
75-A29	31	1/2	Poly
75-531	31	5/8	Aramid
75-B28	31	5/8	Poly
15-335	31-1/8	3/4	10
75-020	31-1/4	3/8	1
75-092	31-1/4	1/2	1
75-075	31-5/16	3/8	2
75-713	31-5/16	3/8	6
75-711	31-5/8	3/8	6
15-693	31-3/4	3/8	
15-668	31-15/16	3/8	
75-709	31-15/16	5/8	8
75-087	32	3/8	7
115-703	32-1/10	3/8	
75-332	32	3/8	Aramid
75-432	32	1/2	Aramid
75-A30	32	1/2	Poly
75-532	32	5/8	Aramid
75-B29	32	5/8	Poly

OREGON	Length	Width	Type
15-337	32-1/8	3/4	10
75-517	32-1/4	7/32	
15-228	32-1/4	3/8	
75-914	32-1/4	3/8	1
75-080	32-1/4	1/2	1
15-508	32-5/16	1-1/8	
15-783	32-3/8	7/16	
175-164	32-1/2	3/8	1
75-164	32-1/2	3/8	1
75-712	32-1/2	6-rib	3
15-211	32-5/8	5/16	
15-020	32-3/4	3/8	1
75-027	32-3/4	3/8	1
15-602	32-15/16	3/8	
15-609	32-15/16	3/8	
75-333	33	3/8	Aramid
75-727	33	3/8	1
75-433	33	1/2	Aramid
75-A31	33	1/2	Poly
75-533	33	5/8	Aramid
75-B30	33	5/8	Poly
15-193	33-1/8	3/8	8
15-014	33-1/4	3/8	2
15-223	33-1/4	3/8	
15-833	33-7/16	1/4	7
15-522	33-1/2	21/32	
75-060	33-1/2	6-rib	3
15-800	33-5/8	3/8	
15-133	33-3/4	3/8	1
15-678	33-7/8	1/2	
15-477	34	5/16	
75-334	34	3/8	Aramid
75-434	34	1/2	Aramid
75-A32	34	1/2	Poly
15-100	34	5/8	1
75-534	34	5/8	Aramid
75-B31	34	5/8	Poly
15-649	34-1/16	1/2	
15-054	34-1/8	3/8	2
75-502	34-1/8	3/8	1
15-748	34-1/8	3/8	8
15-322	34-3/16	3/8	
15-780	34-3/16	3/8	7
75-204	34-1/4	3/8	1
75-996	34-1/4	3/8	2
15-443	34-1/4	1/2	7
75-192	34-3/8	3/8	1
15-225	34-7/16	5/16	
75-273	34-7/16	3/8	6
75-066	34-7/16	6-rib	3
15-781	34-1/2	3/8	7
15-712	34-1/2	1/2	7
75-939	34-1/2	5-rib	3
75-368	34-9/16	3/4	6
15-224	34-5/8	3/8	
75-724	34-5/8	3/8	6
75-157	34-3/4	3/8	1
75-272	34-3/4	3/8	6
75-084	34-3/4	1/2	6
15-184	34-7/8	1/2	
15-339	34-7/8	3/4	10

OREGON	Length	Width	Type
75-335	35	3/8	Aramid
75-501	35	3/8	1
15-430	35	7/16	
115-222	35	1/2	6
75-148	35	1/2	1
75-435	35	1/2	Aramid
75-A33	35	1/2	Poly
75-535	35	5/8	Aramid
75-B32	35	5/8	Poly
15-648	35-1/16	3/8	
75-918	35-1/8	3/8	8
175-012	35-1/8	5/8	1
75-009	35-1/8	5/8	1
75-012	35-1/8	5/8	1
75-289	35-3/16	6-rib	3
75-158	35-1/4	3/8	6
75-684	35-1/4	3/8	1
15-646	35-1/4	1/2	
75-240	35-1/4	5/8	2
75-907	35-3/8	1/2	1
15-643	35-7/16	1/4	
75-365	35-1/2	3/8	6
15-429	35-5/8	7/16	
15-716	35-3/4	3/8	
75-098	35-3/4	3/8	1
15-053	35-7/8	3/8	2
15-195	35-7/8	3/8	
15-842	35-7/8	3/8	7
75-509	36	3/8	
15-052	36	3/8	1
75-336	36	3/8	Aramid
15-940	36	1/2	7
75-436	36	1/2	Aramid
75-906	36	1/2	1
75-A34	36	1/2	Poly
75-536	36	5/8	Aramid
75-B33	36	5/8	Poly
15-756	36-3/16	3/8	
75-249	36-1/4	3/8	1
75-125	36-1/4	1/2	1
75-231	36-5/16	5/8	2
15-661	36-7/16	3/8	
15-782	36-7/16	3/8	
75-144	36-1/2	1/2	6
75-675	36-1/2	5/8	1
75-122	36-5/8	1/4	2
15-416	36-5/8	1/2	
75-096	36-3/4	1/2	1
75-337	37	3/8	Aramid
75-437	37	1/2	Aramid
75-A35	37	1/2	Poly
15-786	37	9/16	
75-537	37	5/8	Aramid
75-B34	37	5/8	Poly
15-230	37-1/8	9/16	
15-262	37-1/8	3/4	
15-931	37-1/4	1/2	7
75-908	37-3/8	1/2	1
15-203	37-7/16	1/2	7
15-426	37-1/2	1/2	
15-266	37-1/2	1-3/16	

OREGON	Length	Width	Type
15-516	37-5/8	3/8	
115-208	37-5/8	1/2	
15-218	37-5/8	1/2	
15-647	37-13/16	1/2	
15-321	37-13/16	21/32	
75-983	37-15/16	1/2	1
15-843	37-15/16	1-3/16	
75-338	38	3/8	Aramid
15-688	38	1/2	
15-936	38	1/2	
75-438	38	1/2	Aramid
75-A36	38	1/2	Poly
115-222	38	5/8	8
75-538	38	5/8	Aramid
75-B35	38	5/8	Poly
15-619	38-1/8	3/8	8
75-911	38-1/4	3/8	2
115-220	38-1/4	5/8	8
15-717	38-5/16	3/8	
115-209	38-3/8	1/2	
75-909	38-3/8	1/2	1
15-427	38-1/2	1/2	1
15-194	38-5/8	1/2	8
15-201	38-13/16	1/2	
15-438	38-15/16	5/8	
75-339	39	3/8	Aramid
75-439	39	1/2	Aramid
75-A37	39	1/2	Poly
75-539	39	5/8	Aramid
75-B36	39	5/8	Poly
15-594	39-3/16	1/2	
15-718	39-1/4	3/8	
75-956	39-1/4	1/2	1
115-221	39-1/4	5/8	8
75-976	39-9/16	3/8	1
75-236	39-5/8	1/2	1
15-785	39-5/8	9/16	
15-662	39-13/16	3/8	7
75-340	40	3/8	Aramid
15-187	40	1/2	
75-440	40	1/2	Aramid
75-A38	40	1/2	Poly
15-292	40	5/8	7
75-540	40	5/8	Aramid
75-B37	40	5/8	Poly
75-043	40-1/4	1/2	1
75-117	40-1/4	1/2	1
15-281	40-3/8	21/32	
15-567	40-1/2	1/2	
75-038	40-1/2	1/2	1
15-419	40-9/16	5/8	
15-431	40-3/4	1-3/16	
75-341	41	3/8	Aramid
15-449	41	1/2	
15-519	41	1/2	
15-719	41	1/2	2
75-441	41	1/2	Aramid
75-A39	41	1/2	Poly
75-541	41	5/8	Aramid
75-B38	41	5/8	Poly
15-924	41	21/32	

B

Belts by Size

OREGON	Length	Width	Type
175-993	41-3/16	5/8	1
75-993	41-3/16	5/8	1
15-366	41-1/4	21/32	
115-212	41-1/4	1-3/16	9
75-890	41-3/8	1/2	1
15-663	41-3/8	1-3/16	
15-677	41-1/2	1/2	
15-432	41-13/16	1-3/16	
15-836	41-7/8	3/8	7
75-342	42	3/8	Aramid
75-442	42	1/2	Aramid
75-A40	42	1/2	Poly
75-542	42	5/8	Aramid
75-B39	42	5/8	Poly
15-226	42-5/16	3/8	
15-803	42-3/8	1-3/16	
15-684	42-9/16	1/2	8
75-343	43	3/8	Aramid
15-374	43	1/2	2
75-443	43	1/2	Aramid
75-A41	43	1/2	Poly
75-543	43	5/8	Aramid
75-B40	43	5/8	Poly
15-289	43-1/8	1/2	
75-215	43-1/4	5/8	6
15-511	43-5/16	1/2	
75-679	43-7/8	1/2	1
15-638	44	3/8	
75-344	44	3/8	Aramid
75-444	44	1/2	Aramid
75-A42	44	1/2	Poly
15-046	44	5/8	6
75-544	44	5/8	Aramid
75-B41	44	5/8	Poly
75-281	44-3/16	5/8	1
75-221	44-5/16	5/8	6
15-282	44-5/16	21/32	8
15-900	44-3/4	9/16	
15-428	44-15/16	1-3/16	
75-345	45	3/8	Aramid
75-445	45	1/2	Aramid
75-A43	45	1/2	Poly
75-545	45	5/8	Aramid
75-B42	45	5/8	Poly
75-720	45-1/8	1-5/32	5
75-090	45-1/4	1/2	1
75-269	45-1/2	1-1/8	5
15-561	45-9/16	3/8	
15-270	45-3/4	1/2	
15-578	45-3/4	7/8	
15-802	45-7/8	1-3/16	
75-346	46	3/8	Aramid
75-446	46	1/2	Aramid
75-A44	46	1/2	Poly
75-546	46	5/8	Aramid
75-B43	46	5/8	Poly
15-929	46-1/16	21/32	
15-248	46-1/8	1/2	8
75-367	46-1/4	1/2	1
75-674	46-1/4	5/8	1
15-559	46-5/16	3/8	

OREGON	Length	Width	Type
15-296	46-1/2	21/32	8
15-354	46-5/8	1/2	
15-220	46-7/8	1/2	
15-572	47	1/2	1
15-813	47	1/2	2
75-447	47	1/2	Aramid
75-A45	47	1/2	Poly
75-547	47	5/8	Aramid
75-B44	47	5/8	Poly
15-280	47-1/16	1/2	8
75-094	47-5/16	1/2	2
15-141	47-3/8	1/2	1
15-399	47-5/8	9/16	
15-801	47-7/8	1/2	1
75-118	47-7/8	7/8	1
75-348	48	3/8	Aramid
75-448	48	1/2	Aramid
75-A46	48	1/2	Poly
75-548	48	5/8	Aramid
75-B45	48	5/8	Poly
75-349	49	3/8	Aramid
15-103	49	1/2	8
75-449	49	1/2	Aramid
75-A47	49	1/2	Poly
75-549	49	5/8	Aramid
75-B46	49	5/8	Poly
15-791	49	1-3/16	
15-908	49-1/16	1/2	
15-955	49-1/16	1/2	
15-404	49-1/16	21/32	
175-119	49-1/8	5/8	1
75-119	49-1/8	5/8	1
15-144	49-3/8	5/8	6
75-177	49-5/8	1-1/8	5
75-350	50	3/8	Aramid
15-208	50	1/2	1
15-947	50	1/2	
75-450	50	1/2	Aramid
75-A48	50	1/2	Poly
75-550	50	5/8	Aramid
75-B47	50	5/8	Poly
75-642	50-1/4	5/8	6
15-181	50-1/4	21/32	
15-682	50-3/8	1/2	
75-223	50-3/8	1/2	1
15-568	50-1/2	1-3/16	
15-165	50-9/16	5/8	
15-616	51	1/2	2
15-807	51	1/2	8
75-451	51	1/2	Aramid
75-A49	51	1/2	Poly
75-551	51	5/8	Aramid
75-B48	51	5/8	Poly
75-708	51-1/8	5/8	6
75-205	51-1/8	1-1/4 (2V)	5
75-274	51-1/4	1/2	1
75-955	51-1/4	1/2	8
75-133	51-5/16	1-1/18	5
75-917	51-3/8	1/2	1
15-904	51-7/16	1-3/16	
15-261	51-1/2	1-3/16	

OREGON	Length	Width	Type
75-219	51-3/4	1-1/8	5
15-260	51-13/16	21/32	
15-450	51-15/16	5/8	7
15-372	52	1/2	2
15-375	52	1/2	2
75-452	52	1/2	Aramid
75-A50	52	1/2	Poly
75-552	52	5/8	Aramid
75-B49	52	5/8	Poly
15-409	52-1/16	5/8	
75-227	52-1/16	5/8	2
15-952	52-1/16	21/32	
15-933	52-1/8	21/32	7
15-458	52-1/4	21/32	
75-260	52-1/4	1-1/8	5
75-889	52-5/16	1/2	1
15-598	52-3/8	1/2	1
75-667	52-7/16	1/2	6
15-571	52-3/4	1-3/16	
15-771	52-13/16	1/2	
15-151	52-13/16	5/8	7
115-218	53	1/2	
15-114	53	1/2	6
15-222	53	1/2	7
15-363	53	1/2	1
15-685	53	1/2	
75-453	53	1/2	Aramid
75-A51	53	1/2	Poly
75-553	53	5/8	Aramid
75-B50	53	5/8	Poly
15-872	53	21/32	
75-210	53-1/8	1/2	2
75-057	53-1/4	1/2	1
75-235	53-1/4	1/2	1
15-749	53-3/8	1/2	
75-154	53-3/8	5/8	2
175-002	53-3/8	45/64	1
75-002	53-3/8	45/64	1
75-951	53-7/16	5/8	6
75-222	53-5/8	5/8	1
75-454	54	1/2	Aramid
75-A52	54	1/2	Poly
75-554	54	5/8	Aramid
75-B51	54	5/8	Poly
15-271	54	21/32	8
15-954	54-1/16	21/32	
15-437	54-5/16	21/32	
15-444	54-3/8	9/16	
15-934	54-7/16	9/16	
15-742	54-1/2	1-1/4	
15-040	54-9/16	1/2	2
15-494	54-9/16	1/2	
15-395	54-5/8	21/32	
75-024	54-5/8	7/8	2
75-095	54-5/8	1-1/8	5
75-455	55	1/2	Aramid
75-A53	55	1/2	Poly
75-555	55	5/8	Aramid
75-B52	55	5/8	Poly
75-112	55-1/8	1/2	1

OREGON	Length	Width	Type
75-952	55-1/8	5/8	6
15-454	55-3/8	21/32	8
15-411	55-9/16	21/32	
15-259	55-3/4	1/2	
15-751	55-13/16	21/32	
15-472	56	1/2	1
75-456	56	1/2	Aramid
75-A54	56	1/2	Poly
75-556	56	5/8	Aramid
75-B53	56	5/8	Poly
75-048	56-1/8	5/8	2
75-008	56-1/4	1/2	1
15-031	56-1/4	5/8	6
75-128	56-5/16	5/8	1
15-570	56-5/16	21/32	
75-798	56-3/8	1/2	2
75-212	56-5/8	1-1/8	5
15-487	56-3/4	1-1/4	
15-275	56-13/16	21/32	8
15-291	56-15/16	21/32	
75-457	57	1/2	Aramid
75-A55	57	1/2	Poly
15-101	57	5/8	8
75-557	57	5/8	Aramid
75-B54	57	5/8	Poly
15-376	57-1/8	1/2	2
15-601	57-1/8	1/2	
75-052	57-1/4	1/2	1
75-234	57-1/4	5-rib	3
15-272	57-5/16	21/32	1
75-458	58	1/2	Aramid
75-A56	58	1/2	Poly
75-558	58	5/8	Aramid
75-B55	58	5/8	Poly
75-886	58-1/8	1/2	1
15-294	58-1/8	21/32	
15-111	58-1/4	1/2	1
75-999	58-1/4	1/2	2
15-424	58-1/4	3/4	
75-378	58-3/8	1/2	2
15-200	58-7/8	1/2	
15-595	58-7/8	9/16	
75-459	59	1/2	Aramid
75-A57	59	1/2	Poly
75-559	59	5/8	Aramid
75-B56	59	5/8	Poly
75-715	59-3/8	1/2	1
15-499	60	1/2	
75-518	60	1/2	1
75-460	60	1/2	Aramid
75-A58	60	1/2	Poly
115-206	60	5/8	
75-560	60	5/8	Aramid
75-B57	60	5/8	Poly
15-485	60-1/16	9/16	
75-974	60-1/4	1/2	1
75-159	60-1/4	5/8	1
15-579	60-1/4	7/8	
175-676	60-3/8	1/2	1
75-655	60-3/8	1/2	1
15-123	60-3/4	5/8	8
15-123	60-3/4	5/8	8

OREGON	Length	Width	Type
75-461	61	1/2	Aramid
75-A59	61	1/2	Poly
75-561	61	5/8	Aramid
75-B58	61	5/8	Poly
75-658	61-1/4	1/2	1
15-948	61-5/16	21/32	1
75-268	61-3/8	1/2	1
75-632	61-15/16	1/2	1
15-452	62	1/2	8
15-905	62	1/2	
75-462	62	1/2	Aramid
75-A60	62	1/2	Poly
75-562	62	5/8	Aramid
75-B59	62	5/8	Poly
15-794	62-1/8	1/2	
75-131	62-1/8	5/8	2
75-040	62-1/4	1/2	2
15-928	62-1/4	21/32	7
15-536	62-5/16	21/32	2
75-659	62-3/8	1/2	2
75-663	62-3/8	1/2	1
15-451	62-7/16	21/32	7
15-247	62-7/8	1/2	8
15-657	62-7/8	1/2	
75-818	62-15/16	5/8	2
75-463	63	1/2	Aramid
75-A61	63	1/2	Poly
15-274	63	5/8	
75-563	63	5/8	Aramid
75-B60	63	5/8	Poly
75-047	63-1/8	5/8	1
75-972	63-1/4	1/2	1
15-032	63-1/4	5/8	6
15-359	63-3/8	1/2	
15-279	63-3/8	5/8	
15-316	64	1/2	2
75-464	64	1/2	Aramid
75-A62	64	1/2	Poly
75-564	64	5/8	Aramid
75-B61	64	5/8	Poly
75-035	64-1/4	5/8	1
15-056	64-5/16	5/8	1
15-935	64-5/8	9/16	
15-277	64-7/8	5/8	
15-464	65	1/2	
15-517	65	1/2	
75-465	65	1/2	Aramid
75-A63	65	1/2	Poly
75-565	65	5/8	Aramid
75-B62	65	5/8	Poly
15-445	65	21/32	7
175-300	65-1/8	5/8	6
75-300	65-1/8	5/8	6
75-637	65-3/16	5/8	6
15-921	65-3/16	21/32	7
75-086	65-1/4	1/2	1
75-954	65-1/4	1/2	1
15-483	65-1/4	9/16	
75-277	65-3/8	1/2	1
75-641	65-7/8	5/8	6
75-466	66	1/2	Aramid
75-A64	66	1/2	Poly

OREGON	Length	Width	Type
75-566	66	5/8	Aramid
75-B63	66	5/8	Poly
175-248	66-1/4	1/2	1
75-248	66-1/4	1/2	1
15-120	66-3/8	1/2	1
15-244	66-3/8	1/2	
15-131	66-9/16	1/2	8
75-467	67	1/2	Aramid
75-A65	67	1/2	Poly
75-004	67	5/8	2
75-567	67	5/8	Aramid
75-B64	67	5/8	Poly
15-501	67-1/16	21/32	8
175-677	67-1/4	1/2	1
75-023	67-1/4	1/2	1
75-656	67-1/4	1/2	1
75-677	67-1/4	1/2	1
75-264	67-1/4	5/8	1
15-169	67-3/4	1/2	
15-160	67-3/4	5/8	7
15-179	67-3/4	21/32	
75-468	68	1/2	Aramid
75-A66	68	1/2	Poly
75-568	68	5/8	Aramid
75-B65	68	5/8	Poly
15-765	68	21/32	
175-025	68-1/4	5/8	1
75-025	68-1/4	5/8	1
75-130	68-1/4	5/8	2
75-671	68-5/8	1/2	1
15-104	69	1/2	8
15-715	69	1/2	1
75-469	69	1/2	Aramid
75-A67	69	1/2	Poly
75-569	69	5/8	Aramid
75-B66	69	5/8	Poly
15-190	69-1/16	21/32	8
15-361	69-1/8	1/2	
175-673	69-3/16	5/8	2
75-673	69-3/16	5/8	2
15-041	69-1/4	1/2	2
175-029	69-1/4	5/8	1
75-029	69-1/4	5/8	1
75-145	69-5/16	5/8	1
15-313	69-3/8	1/2	2
75-470	70	1/2	Aramid
75-A68	70	1/2	Poly
75-570	70	5/8	Aramid
75-B67	70	5/8	Poly
75-218	70-1/8	1/2	1
75-275	70-1/8	5/8	2
15-299	70-1/8	21/32	
15-257	70-5/16	21/32	2
15-737	70-13/16	21/32	
15-320	70-15/16	1/2	8
15-283	70-15/16	21/32	
75-471	71	1/2	Aramid
75-A69	71	1/2	Poly
75-571	71	5/8	Aramid
75-B68	71	5/8	Poly

Belts by Size

OREGON	Length	Width	Type
75-703	71-1/4	1/2	1
75-168	71-1/4	5/8	1
15-735	71-5/16	1/2	1
15-804	71-5/16	21/32	1
15-861	71-5/16	21/32	
175-068	71-7/16	1/2	4
75-068	71-7/16	1/2	4
15-799	71-13/16	21/32	2
75-472	72	1/2	Aramid
75-A70	72	1/2	Poly
75-572	72	5/8	Aramid
75-B69	72	5/8	Poly
15-388	72-1/2	21/32	1
15-902	72-11/16	1/2	
15-118	73	1/2	1
75-473	73	1/2	Aramid
75-A71	73	1/2	Poly
75-573	73	5/8	Aramid
75-B70	73	5/8	Poly
15-210	73-7/8	1/2	8
15-462	73-7/8	1/2	
75-474	74	1/2	Aramid
75-A72	74	1/2	Poly
75-574	74	5/8	Aramid
75-948	74	5/8	6
75-B71	74	5/8	Poly
15-650	74-1/16	21/32	
15-764	74-1/16	21/32	
175-073	74-1/8	1/2	4
75-018	74-1/8	1/2	2
75-073	74-1/8	1/2	4
175-028	74-1/4	5/8	1
75-028	74-1/4	5/8	1
15-766	74-9/16	1/2	
75-475	75	1/2	Aramid
75-A73	75	1/2	Poly
75-575	75	5/8	Aramid
75-B72	75	5/8	Poly
15-773	72-51/16	1/2	2
15-790	75-3/16	21/32	
75-143	75-5/16	5/8	1
15-258	75-5/16	21/32	2
15-767	75-5/16	21/32	1
115-146	75-1/2	1/2	6
15-157	75-7/8	5/8	7
75-476	76	1/2	Aramid
75-A74	76	1/2	Poly
75-576	76	5/8	Aramid
75-B73	76	5/8	Poly
15-460	76-1/16	1/2	8
75-160	76-1/8	1/2	2
15-255	76-5/16	21/32	1
75-001	76-3/4	1/2	1
75-477	77	1/2	Aramid
75-A75	77	1/2	Poly
15-136	77	5/8	6
75-577	77	5/8	Aramid
75-B74	77	5/8	Poly
15-457	77	21/32	
15-815	77-1/16	1/2	
75-136	77-3/16	5/8	2

OREGON	Length	Width	Type
15-302	77-7/16	21/32	
75-600	77-7/8	1/2	1
15-625	78	1/2	1
75-478	78	1/2	Aramid
75-A76	78	1/2	Poly
75-578	78	5/8	Aramid
75-B75	78	5/8	Poly
175-824	78-1/8	1/2	2
75-372	78-1/8	1/2	1
75-824	78-1/8	1/2	2
15-139	78-3/16	5/8	1
15-386	78-3/16	21/32	2
15-055	78-5/16	5/8	1
75-097	78-3/8	1/2	1
15-729	78-1/2	1/2	2
75-107	79	1/2	1
75-479	79	1/2	Aramid
75-A77	79	1/2	Poly
75-579	79	5/8	Aramid
75-B76	79	5/8	Poly
15-839	79-1/16	21/32	
15-357	79-1/8	1/2	
75-137	79-3/16	5/8	2
75-360	79-1/4	1/2	1
175-021	79-5/16	1/2	1
75-021	79-5/16	1/2	1
15-613	79-3/8	1/2	1
15-642	79-3/8	1/2	1
75-823	79-3/8	1/2	2
15-695	79-9/16	1/2	1
15-581	79-9/16	21/32	1
75-480	80	1/2	Aramid
75-A78	80	1/2	Poly
15-109	80	5/8	1
75-580	80	5/8	Aramid
75-B77	80	5/8	Poly
15-653	80-1/8	21/32	
15-241	80-3/16	21/32	
75-949	80-1/4	5/8	6
15-030	80-5/16	5/8	1
15-961	80-1/2	1/2	
75-151	80-3/4	1/2	1
75-481	81	1/2	Aramid
75-A79	81	1/2	Poly
75-581	81	5/8	Aramid
75-B78	81	5/8	Poly
75-208	81-1/16	5/8	2
15-314	81-1/8	21/32	
75-178	81-1/4	5/8	1
15-405	81-5/16	21/32	1
75-811	81-1/2	1/2	1
15-045	81-1/2	5/8	6
15-453	81-3/4	21/32	8
15-769	82	1/2	1
75-482	82	1/2	Aramid
75-A80	82	1/2	Poly
15-137	82	5/8	1
75-582	82	5/8	Aramid
75-B79	82	5/8	Poly
15-922	82-1/8	9/16	
75-179	82-1/8	5/8	2

OREGON	Length	Width	Type
15-446	82-1/8	21/32	8
175-000	82-1/4	1/2	1
75-000	82-1/4	1/2	1
75-054	82-5/16	5/8	1
75-820	82-5/16	5/8	1
15-810	82-5/16	21/32	
15-254	82-13/16	21/32	2
15-672	83	1/2	
75-483	83	1/2	Aramid
75-A81	83	1/2	Poly
75-583	83	5/8	Aramid
75-B80	83	5/8	Poly
15-630	83-1/8	1/2	
75-005	83-1/8	1/2	1
75-199	83-1/8	5/8	1
15-110	83-1/4	1/2	1
175-195	83-1/4	1/2	1
75-115	83-1/4	1/2	1
75-195	83-1/4	1/2	1
75-361	83-1/4	5/8	1
75-821	83-1/4	5/8	1
15-652	83-5/16	21/32	
75-898	83-3/8	1/2	2
15-659	83-7/16	5/8	
75-063	83-1/2	1/2	1
15-700	83-3/4	1/2	1
15-113	83-3/4	5/8	1
15-401	83-13/16	21/32	1
75-484	84	1/2	Aramid
75-A82	84	1/2	Poly
75-584	84	5/8	Aramid
75-B81	84	5/8	Poly
175-169	84-1/16	1/2	2
75-169	84-1/16	1/2	2
15-529	84-1/16	21/32	
15-132	84-3/16	1/2	1
75-196	84-3/16	1/2	1
75-226	84-3/16	5/8	2
75-973	84-1/4	1/2	1
75-822	84-5/16	5/8	1
15-421	84-5/16	21/32	
15-566	84-5/16	21/32	1
15-776	84-5/16	21/32	2
75-266	84-11/16	1/2	1
15-814	84-13/16	21/32	
15-774	84-15/16	21/32	2
75-485	85	1/2	Aramid
75-A83	85	1/2	Poly
15-102	85	5/8	8
75-585	85	5/8	Aramid
75-B82	85	5/8	Poly
15-762	85-1/16	21/32	
75-016	85-1/4	1/2	1
75-142	85-1/4	1/2	1
75-180	85-1/4	5/8	2
15-213	85-5/16	1/2	1
175-170	85-1/2	5/8	2
75-170	85-1/2	5/8	2
75-486	86	1/2	Aramid
75-A84	86	1/2	Poly

OREGON	Length	Width	Type
75-586	86	5/8	Aramid
75-B83	86	5/8	Poly
75-042	86-1/8	1/2	1
75-138	86-1/4	5/8	1
175-041	86-3/8	1/2	1
75-041	86-3/8	1/2	1
15-878	86-3/8	21/32	
15-680	86-1/2	21/32	1
75-487	87	1/2	Aramid
75-A85	87	1/2	Poly
75-587	87	5/8	Aramid
75-B84	87	5/8	Poly
75-661	87-1/8	5/8	2
75-934	87-1/4	1/2	1
75-072	87-1/4	5/8	2
75-113	87-1/4	5/8	1
15-583	87-5/16	21/32	1
75-129	87-3/8	1/2	1
75-899	87-3/8	1/2	1
15-576	87-7/16	21/32	1
115-029	87-5/8	1/2	1
15-029	87-5/8	1/2	1
15-654	87-7/8	1/2	
15-231	88	1/2	1
75-488	88	1/2	Aramid
75-A86	88	1/2	Poly
75-588	88	5/8	Aramid
75-B85	88	5/8	Poly
15-455	88-1/16	21/32	8
15-664	88-1/4	1/2	
75-026	88-1/4	1/2	1
75-935	88-1/4	1/2	1
75-936	88-1/4	1/2	2
75-031	88-1/4	5/8	1
15-949	88-5/16	21/32	1
175-099	88-3/8	1/2	1
75-099	88-3/8	1/2	1
15-641	88-5/8	1/2	1
15-792	88-5/8	1/2	2
75-964	88-5/8	1/2	1
75-979	88-5/8	1/2	2
175-654	88-3/4	5/8	1
75-654	88-3/4	5/8	1
15-415	88-13/16	21/32	1
75-036	88-7/8	5/8	2
15-920	88-7/8	21/32	
15-911	88-7/8	2-3/16	
75-489	89	1/2	Aramid
75-A87	89	1/2	Poly
75-589	89	5/8	Aramid
75-B86	89	5/8	Poly
15-670	89-1/16	21/32	
75-055	89-1/4	5/8	2
15-413	89-5/16	21/32	
15-660	89-1/2	1/2	
175-135	89-5/8	1/2	1
75-135	89-5/8	1/2	1
15-185	90	1/2	
15-493	90	1/2	
15-651	90	1/2	1
75-490	90	1/2	Aramid

OREGON	Length	Width	Type
75-A88	90	1/2	Poly
75-590	90	5/8	Aramid
75-B87	90	5/8	Poly
15-669	90-1/16	21/32	
75-045	90-1/8	1/2	1
175-912	90-1/8	5/8	1
75-181	90-1/8	5/8	2
75-912	90-1/8	5/8	1
15-025	90-1/4	1/2	1
175-171	90-1/4	1/2	1
75-171	90-1/4	1/2	1
75-892	90-3/8	1/2	1
15-417	90-3/8	21/32	1
15-634	90-9/16	1/2	
15-733	90-9/16	1/2	1
75-152	91	1/2	1
75-491	91	1/2	Aramid
75-A89	91	1/2	Poly
175-995	91	5/8	1
75-591	91	5/8	Aramid
75-995	91	5/8	1
75-B88	91	5/8	Poly
15-732	91-1/16	1/2	
15-761	91-5/16	21/32	
15-575	91-7/16	21/32	1
15-026	91-1/2	1/2	1
75-109	91-1/2	1/2	4
15-436	91-5/8	21/32	2
15-588	91-13/16	21/32	2
15-691	92	1/2	2
75-492	92	1/2	Aramid
75-A90	92	1/2	Poly
75-592	92	5/8	Aramid
75-B89	92	5/8	Poly
175-106	92-1/4	1/2	1
75-106	92-1/4	1/2	1
75-806	92-5/16	1/2	1
75-978	92-3/8	1/2	1
15-035	92-5/8	1/2	1
15-750	92-13/16	21/32	
15-418	93	1/2	
15-724	93	1/2	2
75-493	93	1/2	Aramid
75-A91	93	1/2	Poly
75-593	93	5/8	Aramid
75-B90	93	5/8	Poly
75-194	93-1/4	1/2	1
75-058	93-1/4	5/8	2
15-930	93-3/8	21/32	
15-932	93-3/8	21/32	
75-807	93-9/16	1/2	1
15-486	93-3/4	1/2	
75-494	94	1/2	Aramid
75-A92	94	1/2	Poly
75-594	94	5/8	Aramid
75-B91	94	5/8	Poly
15-408	94-1/16	21/32	
15-951	94-1/16	21/32	
15-753	94-5/16	1/2	1
15-763	94-9/16	1/2	1
15-926	94-9/16	21/32	

OREGON	Length	Width	Type
15-410	94-3/4	21/32	
15-644	95	1/2	1
15-667	95	1/2	
75-061	95	1/2	1
75-495	95	1/2	Aramid
75-A93	95	1/2	Poly
75-595	95	5/8	Aramid
75-B92	95	5/8	Poly
75-111	95-1/8	1/2	1
15-249	95-1/8	21/32	
75-167	95-1/4	1/2	1
15-665	95-3/8	1/2	
175-197	95-3/8	1/2	2
75-197	95-3/8	1/2	2
15-229	95-9/16	1/2	1
15-276	95-15/16	1/2	8
15-535	95-15/16	1/2	
75-496	96	1/2	Aramid
75-A94	96	1/2	Poly
75-596	96	5/8	Aramid
75-B93	96	5/8	Poly
75-298	96-1/4	1/2	1
15-057	96-5/16	5/8	1
15-962	96-1/2	21/32	
175-813	96-5/8	1/2	1
75-813	96-5/8	1/2	1
15-253	96-7/8	21/32	
75-497	97	1/2	Aramid
75-A95	97	1/2	Poly
75-597	97	5/8	Aramid
75-B94	97	5/8	Poly
75-209	97-1/16	1/2	1
175-913	97-3/16	5/8	2
75-913	97-3/16	5/8	2
75-263	97-1/4	5/8	1
15-130	97-5/16	5/8	1
75-977	97-1/2	5/8	1
15-227	97-9/16	1/2	1
15-760	97-11/16	1/2	1
15-158	98	1/2	1
75-498	98	1/2	Aramid
75-A96	98	1/2	Poly
75-598	98	5/8	Aramid
75-B95	98	5/8	Poly
75-163	98-1/4	1/2	1
75-108	98-1/2	1/2	1
15-466	98-11/16	21/32	1
15-553	98-7/8	5/8	2
75-499	99	1/2	Aramid
75-A97	99	1/2	Poly
75-599	99	5/8	Aramid
75-B96	99	5/8	Poly
75-161	99-3/16	1/2	2
15-907	99-3/16	5/8	
75-022	99-5/16	1/2	2
15-957	99-13/16	21/32	
75-400	100	1/2	Aramid
75-A98	100	1/2	Poly
75-500	100	5/8	Aramid
75-B97	100	5/8	Poly
15-593	100-1/16	1/2	1

Belts by Size

OREGON	Length	Width	Type
75-364	100-1/4	5/8	1
15-373	100-1/4	21/32	2
15-021	101	1/2	1
75-401	101	1/2	Aramid
75-A99	101	1/2	Poly
75-B98	101	5/8	Poly
15-420	101-1/4	1/2	
175-895	101-1/4	1/2	1
75-895	101-1/4	1/2	1
75-103	101-5/16	1/2	1
75-207	101-5/16	5/8	1
15-315	101-3/8	7/8	2
15-023	101-1/2	1/2	1
75-362	101-1/2	5/8	1
75-246	102	1/2	1
75-402	102	1/2	Aramid
75-A100	102	1/2	Poly
75-B99	102	5/8	Poly
15-278	102-1/16	1/2	8
15-463	102-1/16	5/8	
75-975	102-1/8	1/2	2
15-526	102-13/16	21/32	
15-027	103	1/2	1
15-740	103	1/2	2
15-788	103	1/2	2
15-923	103	1/2	
75-403	103	1/2	Aramid
75-A101	103	1/2	Poly
75-503	103	5/8	Aramid
75-B100	103	5/8	Poly
75-155	103-3/8	5/8	1
175-919	103-15/16	1/2	1
75-919	103-15/16	1/2	1
15-549	103-15/16	1-3/16	
75-404	104	1/2	Aramid
75-A102	104	1/2	Poly
75-B101	104	5/8	Poly
75-292	104-1/16	5/8	2
15-629	104-7/16	1/2	2
75-165	104-1/2	1/2	4
75-283	104-3/4	5/8	2
15-256	104-7/8	21/32	
115-207	105	1/2	
15-623	105	1/2	1
75-405	105	1/2	Aramid
75-A103	105	1/2	Poly
75-B102	105	5/8	Poly
15-024	105-1/8	1/2	1
75-672	105-1/8	1/2	1
15-106	105-1/4	1/2	1
15-140	105-1/4	1/2	1
15-589	105-5/16	1/2	2
15-877	105-1/2	21/32	
15-022	105-3/4	1/2	1
75-406	106	1/2	Aramid
75-A104	106	1/2	Poly
75-B103	106	5/8	Poly
15-034	106-1/8	1/2	1
15-121	106-3/16	5/8	1
15-956	106-5/16	21/32	

OREGON	Length	Width	Type
15-192	106-9/16	1/2	
15-440	106-11/16	3/4	
15-304	106-3/4	1/2	
75-625	106-3/4	5/8	1
75-407	107	1/2	Aramid
75-A105	107	1/2	Poly
75-B104	107	5/8	Poly
15-798	107-1/16	1/2	2
75-808	107-1/8	1/2	2
15-628	107-5/16	21/32	2
15-789	107-1/2	1/2	
15-746	107-9/16	1/2	
75-363	107-13/16	5/8	2
75-408	108	1/2	Aramid
75-A106	108	1/2	Poly
75-B105	108	5/8	Poly
15-488	108-1/16	1/2	1
15-704	108-1/16	1/2	
175-105	108-1/4	1/2	4
75-105	108-1/4	1/2	4
75-243	108-5/16	5/8	2
75-670	108-5/16	5/8	1
75-214	108-1/2	1/2	2
75-409	109	1/2	Aramid
75-A107	109	1/2	Poly
75-B106	109	5/8	Poly
175-714	109-1/4	1/2	1
75-714	109-1/4	1/2	1
15-033	109-5/16	5/8	1
75-267	109-5/16	5/8	1
15-686	109-3/8	21/32	
15-202	109-1/2	1/2	
75-410	110	1/2	Aramid
75-A108	110	1/2	Poly
75-B107	110	5/8	Poly
75-411	111	1/2	Aramid
75-A109	111	1/2	Poly
75-B108	111	5/8	Poly
15-705	111-1/16	1/2	1
75-812	111-1/8	5/8	2
75-188	111-1/4	5/8	1
15-013	111-5/16	5/8	1
175-295	111-5/16	5/8	1
75-295	111-5/16	5/8	1
15-269	111-3/8	21/32	2
15-138	111-1/2	1/2	1
15-606	111-1/2	21/32	1
15-352	111-7/8	21/32	1
15-538	111-15/16	1-3/16	
75-412	112	1/2	Aramid
75-A110	112	1/2	Poly
15-122	112	5/8	1
75-B109	112	5/8	Poly
75-897	112-1/8	1/2	1
75-114	112-3/8	1/2	1
15-492	112-9/16	21/32	
75-134	112-5/8	5/8	2
15-711	112-11/16	1/2	1
15-043	112-11/16	1-1/4 (2V)	9
115-146	112-3/4	1/2	1

OREGON	Length	Width	Type
75-413	113	1/2	Aramid
75-A111	113	1/2	Poly
75-B110	113	5/8	Poly
15-011	113-3/16	1-1/4 (2V)	9
15-142	113-1/2	1/2	1
75-414	114	1/2	Aramid
75-A112	114	1/2	Poly
75-B111	114	5/8	Poly
15-350	114-1/16	1/2	
15-353	114-1/16	1/2	1
15-573	114-1/16	1/2	1
15-605	114-1/16	1/2	1
15-107	114-1/4	1/2	1
15-351	114-1/4	1/2	
15-734	114-1/4	1/2	1
15-829	114-1/4	1/2	
175-299	114-3/8	1/2	1
75-299	114-3/8	1/2	1
15-307	114-3/8	21/32	
15-708	114-9/16	1/2	
15-242	114-5/8	21/32	1
75-904	114-13/16	5/8	2
75-A113	115	1/2	Poly
75-B112	115	5/8	Poly
75-963	115-5/16	5/8	1
15-309	115-7/16	21/32	
15-434	115-3/4	21/32	
75-A114	116	1/2	Poly
75-B113	116	5/8	Poly
15-963	116	21/32	
115-204	116-3/16	5/8	
75-757	116-5/16	1/2	1
15-853	116-5/8	2-3/16	
75-417	117	1/2	Aramid
75-A115	117	1/2	Poly
75-B114	117	5/8	Poly
15-265	117-1/16	21/32	
75-079	117-1/8	1/2	2
15-293	117-1/8	21/32	
15-681	117-1/8	21/32	1
15-009	117-5/16	5/8	1
75-644	117-1/2	5/8	1
75-044	117-5/8	5/8	1
15-364	117-7/8	21/32	1
75-A116	118	1/2	Poly
75-B115	118	5/8	Poly
175-706	118-5/16	1/2	1
75-706	118-5/16	1/2	1
75-946	118-3/4	5/8	2
15-884	118-13/16	21/32	
75-A117	119	1/2	Poly
75-B116	119	5/8	Poly
15-903	119	21/32	
75-701	119-3/8	1/2	1
15-461	119-1/2	21/32	
15-544	119-1/2	1-3/16	
15-550	119-1/2	1-3/16	
75-371	119-3/4	1/2	2
15-205	120	1/2	8
75-A118	120	1/2	Poly

B

OREGON	Length	Width	Type
75-B117	120	5/8	Poly
15-539	120	1-3/16	
75-984	120-1/8	5/8	1
15-124	120-1/4	1/2	1
75-957	120-1/4	1/2	1
15-490	120-9/16	21/32	
15-317	120-3/4	21/32	
15-498	120-15/16	21/32	1
75-A119	121	1/2	Poly
75-B118	121	5/8	Poly
75-681	121-1/8	5/8	1
15-318	121-1/8	21/32	
15-217	121-3/8	1/2	1
15-627	121-3/4	1/2	2
15-152	121-7/8	21/32	
15-303	121-15/16	7/16	
15-108	122	1/2	1
75-A120	122	1/2	Poly
75-B119	122	5/8	Poly
75-816	122-1/8	1/2	1
15-574	122-5/16	1/2	1
175-815	122-1/2	1/2	1
75-815	122-1/2	1/2	1
15-286	122-13/16	21/32	8
75-A121	123	1/2	Poly
75-B120	123	5/8	Poly
75-373	123-1/32	1/2	4
75-270	123-5/16	5/8	1
15-287	123-5/16	21/32	2
15-173	123-3/8	21/32	1
15-012	123-7/16	1-1/4 (2V)	9
15-295	123-15/16	21/32	
75-A122	124	1/2	Poly
75-B121	124	5/8	Poly
15-797	125	1/2	
75-A123	125	1/2	Poly
75-B122	125	5/8	Poly
15-037	125-3/8	5/8 (BB)	4
75-645	125-1/2	5/8	1
75-A124	126	1/2	Poly
15-039	126	5/8	1
75-B123	126	5/8	Poly
15-731	126-1/16	1/2	2
15-812	126-9/16	1/2	
15-170	126-7/8	21/32	1
15-873	126-7/8	21/32	
75-A125	127	1/2	Poly
75-B124	127	5/8	Poly
15-467	127-1/16	21/32	1
75-759	127-1/2	1/2	1
15-188	127-5/8	1/2	
75-A126	128	1/2	Poly
75-B125	128	5/8	Poly
75-211	128-5/16	5/8	2
15-216	128-13/16	1/2	1
75-960	128-13/16	5/8	1
75-A127	129	1/2	Poly
75-B126	129	5/8	Poly
15-546	129-1/16	21/32	
15-491	129-1/16	1-13/16	
15-545	129-1/2	1-1/8	
15-887	129-5/8	21/32	
15-355	130	1/2	
75-A128	130	1/2	Poly
75-B127	130	5/8	Poly
15-821	130-1/16	1/2	1
15-305	130-1/8	21/32	
75-296	130-3/16	5/8	4
75-A129	131	1/2	Poly
75-B128	131	5/8	Poly
15-243	131-3/16	21/32	1
75-716	131-5/16	5/8	1
15-174	131-5/8	21/32	1
15-288	131-5/8	21/32	8
15-154	131-3/4	21/32	
15-310	131-13/16	21/32	
75-A130	132	1/2	Poly
75-B129	132	5/8	Poly
15-368	132-3/8	9/16	
15-368	132-3/8	9/16	
75-634	132-1/2	5/8	1
15-435	132-7/8	21/32	
15-899	132-7/8	21/32	
75-A131	133	1/2	Poly
75-B130	133	5/8	Poly
15-879	133	21/32	
15-297	133-1/16	21/32	
75-193	133-5/16	5/8	2
115-214	133-1/2	5/8	
175-814	133-13/16	5/8	1
75-814	133-13/16	5/8	1
15-394	133-13/16	21/32	1
175-710	134	1/2	1
75-710	134	1/2	1
75-A132	134	1/2	Poly
75-B131	134	5/8	Poly
15-683	134-1/8	21/32	
15-412	134-3/8	1/2	8
15-739	134-3/8	1/2	2
15-898	134-3/8	1/2	
15-459	134-1/2	5/8	
15-164	134-3/4	21/32	1
15-896	134-7/8	21/32	
75-A133	135	1/2	Poly
75-B132	135	5/8	Poly
75-370	135-3/8	5/8	2
15-674	135-9/16	21/32	
75-242	135-5/8	5/8	4
75-646	135-3/4	5/8	1
15-512	135-7/8	21/32	
15-916	135-7/8	21/32	
15-852	135-15/16	21/32	
75-A134	136	1/2	Poly
15-125	136	5/8	1
75-B133	136	5/8	Poly
15-548	136-1/2	1-3/16	
115-706	136-1/2	5/8	1
15-250	136-9/16	21/32	
15-809	136-9/16	21/32	
75-A135	137	1/2	Poly
15-134	137	5/8	1
75-B134	137	5/8	Poly
75-230	137-1/8	5/8	1
15-547	137-1/8	1-3/16	
15-036	137-3/8	5/8 (BB)	4
15-943	137-1/2	21/32	
15-863	137-11/16	1/2	
75-247	137-3/4	1/2	1
75-A136	138	1/2	Poly
75-B135	138	5/8	Poly
175-994	138-3/16	5/8	1
75-994	138-3/16	5/8	1
15-820	138-3/8	1/2	
15-897	138-3/8	1/2	2
15-945	138-1/2	1/2	
15-018	138-1/2	5/8	1
15-741	138-9/16	1/2	2
15-938	138-9/16	1/2	
15-159	138-5/8	21/32	
175-894	138-3/4	5/8	2
75-894	138-3/4	5/8	2
75-A137	139	1/2	Poly
75-B136	139	5/8	Poly
15-370	139-1/16	21/32	1
15-901	139-1/8	21/32	
75-945	139-7/16	5/8	1
175-992	139-11/16	1/2	2
75-992	139-11/16	1/2	2
15-795	139-7/8	1/2	2
75-A138	140	1/2	Poly
75-B137	140	5/8	Poly
75-216	140-1/8	5/8	1
15-541	140-1/2	1-1/8	
75-A139	141	1/2	Poly
75-648	141	5/8	1
75-B138	141	5/8	Poly
15-874	141	21/32	
15-143	141-1/4	1/2	1
75-800	141-3/8	1/2	2
15-825	141-7/8	21/32	2
75-A140	142	1/2	Poly
115-203	142	5/8	
15-010	142	5/8	2
75-B139	142	5/8	Poly
15-828	142-1/4	21/32	1
75-804	142-5/16	1/2	1
15-167	142-3/8	21/32	1
175-810	142-1/2	5/8	2
75-810	142-1/2	5/8	2
115-200	142-3/4	1/2	
15-673	142-7/8	21/32	2
75-A141	143	1/2	Poly
15-112	143	5/8	1
75-B140	143	5/8	Poly
75-297	143-1/8	1/2	1
75-232	143-1/8	5/8	2
75-756	143-1/4	5/8	1
15-958	143-3/8	21/32	1
75-802	143-5/8	1/2	1
15-824	143-5/8	21/32	2

Belts by Size

OREGON	Length	Width	Type
15-882	143-5/8	21/32	
75-A142	144	1/2	Poly
75-B141	144	5/8	Poly
15-371	144-3/16	21/32	2
15-234	144-7/8	21/32	1
75-A143	145	1/2	Poly
75-B142	145	5/8	Poly
15-369	145-3/16	21/32	1
15-473	145-3/8	21/32	1
15-389	145-7/16	21/32	
15-126	145-1/2	5/8	1
15-180	145-9/16	21/32	1
75-A144	146	1/2	Poly
75-B143	146	5/8	Poly
15-356	146-1/8	1/2	1
15-017	146-1/8	5/8	1
75-186	146-1/8	5/8	1
175-803	146-3/16	1/2	1
75-803	146-3/16	1/2	1
15-049	146-1/4	1/2	1
75-A145	147	1/2	Poly
75-B144	147	5/8	Poly
15-805	147-1/16	1/2	
75-669	147-1/8	5/8	1
15-827	147-3/8	21/32	1
15-871	147-9/16	21/32	
115-205	147-3/4	5/8	
175-893	147-7/8	5/8	2
75-682	147-7/8	5/8	1
75-893	147-7/8	5/8	2
75-A146	148	1/2	Poly
75-B145	148	5/8	Poly
15-308	148-1/8	21/32	
15-156	148-1/2	21/32	
75-649	148-5/8	5/8	1
75-A147	149	1/2	Poly
75-B146	149	5/8	Poly
75-635	149-3/8	5/8	1
15-171	149-1/2	21/32	1
15-497	149-15/16	1/2	
15-235	149-15/16	5/8	1
75-A148	150	1/2	Poly
115-213	150	5/8	
75-B147	150	5/8	Poly
15-507	150-5/16	21/32	1
75-944	150-9/16	5/8	1
15-513	150-7/8	21/32	
75-A149	151	1/2	Poly
75-B148	151	5/8	Poly
75-755	151-1/8	5/8	1
15-215	151-5/16	1/2	1
15-768	151-5/16	1/2	1
15-514	151-3/4	1-3/8	
15-865	151-7/8	1/2	
75-819	151-7/8	5/8	1
15-236	151-7/8	21/32	1
75-A150	152	1/2	Poly
15-135	152	5/8	1
75-B149	152	5/8	Poly
75-B150	153	5/8	Poly

OREGON	Length	Width	Type
15-119	153-3/4	5/8	1
15-127	153-3/4	5/8	1
75-961	153-3/4	5/8	1
15-129	154	5/8	1
75-629	155	5/8	1
115-202	155-1/2	5/8	
15-838	155-13/16	1/2	
15-237	155-7/8	21/32	1
15-264	156-9/16	21/32	
15-913	157-3/16	21/32	
75-516	157-3/4	5/8	
75-801	157-13/16	5/8	4
15-826	158-5/16	21/32	1
15-959	158-9/16	21/32	1
15-837	159-3/16	1/2	
15-358	159-3/4	1/2	
15-306	160-3/8	21/32	
15-390	160-3/8	21/32	2
15-855	160-9/16	21/32	
75-799	161-9/16	5/8	1
15-847	161-7/8	21/32	
15-028	162	1/2	1
15-367	162	7/8	
15-918	162-1/16	7/8	2
15-679	162-3/8	21/32	2
15-128	163	5/8	1
75-687	163-1/4	5/8	1
75-515	163-1/2	5/8	
75-664	165-1/16	5/8	1
115-704	163-1/2	5/8	1
15-515	165-13/16	1-3/8	
15-881	166	7/8	2
115-201	167-3/8	5/8	
15-860	167-7/8	1-3/8	
15-465	168	21/32	1
75-967	169-1/2	5/8	1
15-105	170	5/8	1
15-038	173-1/2	7/8	1
115-706	173-3/4	5/8	1
15-474	175-1/8	21/32	2
75-631	175-3/4	5/8	1
75-943	175-13/16	5/8	1
15-116	176	5/8	1
15-153	176-5/16	21/32	
15-525	176-3/8	21/32	2
15-019	177	5/8	1
15-849	177-7/8	21/32	
75-662	178	5/8	1
15-895	178-1/16	21/32	
115-216	180	5/8	
15-042	180-1/4	5/8	1
15-360	181-5/8	1/2	1
75-688	183	5/8	1
15-050	183-5/8	5/8	1
15-155	185-3/4	21/32	
15-115	186	5/8	1
15-238	188-7/8	21/32	1
15-500	189-3/8	21/32	1
75-665	194-1/2	5/8	1
15-856	197-15/16	21/32	

OREGON	Length	Width	Type
15-117	199	5/8	1
15-854	199-3/4	21/32	
15-864	201-1/2	21/32	
15-890	202-15/16	21/32	
15-888	209-1/4	21/32	
15-875	209-13/16	21/32	
115-215	213-7/16	5/8	
15-232	218-15/16	21/32	1
15-858	218-15/16	21/32	
75-514	219-1/4	5/8	1
15-885	220-7/16	21/32	
15-886	222-5/8	21/32	
15-889	225-3/8	21/32	
15-906	226-3/4	21/32	
15-891	229-1/2	21/32	
15-869	234	21/32	
15-233	235-5/8	21/32	1
15-239	237-3/4	21/32	1
15-914	241-15/16	21/32	
75-887	242-13/32	5/8	1
15-876	245-5/8	21/32	
15-894	246-5/8	21/32	
15-848	249-13/16	21/32	
15-240	251-3/8	21/32	1
15-850	256-1/2	21/32	
15-893	258-1/4	21/32	
15-867	259-7/8	21/32	
15-892	264-3/16	21/32	
75-888	264-13/32	5/8	1
15-851	266-1/2	21/32	
15-868	271-5/8	21/32	
15-870	277-5/8	7/8	2
115-217	278-3/4	5/8	
15-883	286-7/16	21/32	

B

OREGON	Replaces	Size	Description	Type	Product Code
AMF					
15-654	33125 49330 301935	1/2" X 87-7/8"	**Premium Belt**	7	
15-657	45186	1/2" X 62-7/8"	**Premium Belt** Fits 32" decks	7	
15-659	49878	5/8" X 83-7/16"	**Premium Belt**	7	
15-660	57556	1/2" X 89-1/2"	**Premium Belt**	1	
15-649	300575	1/2" X 34-1/16"	**Premium Belt**	1	
15-650	302289	21/32" X 74-1/16"	**Premium Belt**	7	
15-651	303241	1/2" X 90"	**Premium Belt**	1	
15-652	305148	21/32" X 83-5/16"	**Premium Belt**	1	
15-653	308701	21/32" X 80-1/8"	**Premium Belt**	7	
AYP					
15-716	74977 91786042	3/8" X 35-3/4"	**Premium Belt**	2	
15-718	88074	3/8" X 39-1/4"	**Premium Belt**	2	
15-472	110411 539110411	1/2" X 56"	**Premium Belt** – Hydro Drive	1	
15-473	110832 539110832 510201101	21/32" X 145-7/16"	**Premium Belt** – Deck Drive For 42" decks	1	
15-474	112529 539112529	21/32" X 175-1/8"	**Premium Belt** – Deck Drive For 52" decks	2	
15-700	141416 532141416	1/2" X 83-3/4"	**Premium Belt** – Ground Drive For lawn tractors (1995–1999)	1	
15-704	165555 53216555	1/2" X 108-1/16"	**Premium Belt** – Deck Drive AA For rear discharge 36" lawn tractors (1999 & earlier)	4	
15-705	165631 532165631	1/2" X 111-1/16"	**Premium Belt** – Ground Drive For rear discharge lawn tractors (1999 & earlier)	1	
15-708	169178 532169178	1/2" X 114-9/16"	**Premium Belt** – Deck Drive AA For rear discharge 42" lawn tractors (1999 & earlier)	4	
15-223	169778 532169778	3/8" X 33-1/4"	**Premium Belt** – Ground Drive For 21" self-propelled mower (2004)	7	
15-711	170140 532170140	1/2" X 112-11/16"	**Premium Belt** – Ground Drive For rear discharge lawn tractors (2006–2012)	1	

Belts

AYP

OREGON	Replaces	Size	Description	Type	Product Code
15-712	179092 532179092	1/2" X 34-1/2"	**Premium Belt** – Ground Drive For 2-stage snow throwers (2002–2004)	7	
15-224	182212 532182212	3/8" X 34-5/8"	**Premium Belt** – Ground Drive For 21" self-propelled mower (2004–2005)	7	
15-225	183688 532183688	5/16" X 34-7/16"	**Premium Belt** – Ground Drive For 21" self-propelled EZ walk high wheel mowers (2005)	7	
15-226	185476 532185476	3/8" X 42-5/16"	**Premium Belt** – Cutter Drive For wheeled string trimmers	7	
15-227	194346 532194346	1/2" X 97-9/16"	**Premium Belt** – Ground Drive For lawn tractors (2009–2012)	1	
15-228	196853 532196853	3/8" X 32-1/4"	**Premium Belt** – Ground Drive For 21" self-propelled mowers	7	
15-229	401603 532401603	1/2" X 95-9/16"	**Premium Belt** – Ground Drive For lawn tractors (2006–2008)	1	
15-230	408010 532408010	9/16" X 37-1/8"	**Premium Belt** – Impeller Drive For 2-stage snow throwers	7	
15-231	419271 532419271	1/2" X 88"	**Premium Belt** – Deck Drive For riding mowers with 30" decks (2010–2012)	1	
15-717	850053 532850053	3/8" X 38-5/16"	**Premium Belt** – Ground Drive For 20" self-propelled mower (1999 & earlier)	7	
15-715	062828 917532062828	1/2" X 69"	**Premium Belt** – Deck Drive For lawn tractors with 36" decks (1999 & earlier)	1	
15-688	102655X 917102655X	1/2" X 38"	**Premium Belt** – Impeller Drive For 2-stage snow throwers	2	
15-691	106863X 108597X	1/2" X 92"	**Premium Belt** – Deck Drive For garden tractors with 44" decks (1999 & earlier)	2	
15-693	111924X 532111924	3/8" X 31-3/4"	**Premium Belt** – Ground Drive For 20" self-propelled mowers (1999 & earlier)	7	
15-695	124293X 532124293X	1/2" X 79-9/16"	**Premium Belt** – Deck Drive For lawn tractors with 36" decks (1999 & earlier)	1	
15-719	9180R	1/2" X 41"	**Premium Belt** – Tine Drive For front tine tillers (1995–2010)	2	
75-115	1629J	1/2" x 83-1/4"	**Premium Belt** – Transmission Fits Sears model 917.255702-3	1	
75-107	106085X 532106085	1/2" x 79"	**Premium Belt** – Mower Deck For 36", 38", & 44" decks (1991–1999)	1	

B

AYP

OREGON	Replaces	Size	Description	Type	Product Code
15-024	539110410	1/2" x 105-1/8"	**Premium Belt** – Mower Deck For mower deck drive, 42" zero turn mowers (2004–2007) Fits models Z4217, Z4218, Z4219, CZ4217, & CZ42175	1	
75-108	110883X 532110883	1/2" x 98-1/2"	**Premium Belt** – Transmission For 18 HP & 20 HP mowers (1991–1999), non-hydro	1	
75-194	110884X 532110884	1/2" x 93-1/4"	**Premium Belt** – PTO Fits XEG11082HAR & Poulan Pro PP2050	1	
75-171	125907X 532125907	1/2" x 90-1/4"	**Premium Belt** – Transmission For 14 HP with 38" cut deck	1	
175-171			**Belt** – Standard Version of 75-171	1	
75-935	126520X 532126520	1/2"x 88-1/4"	**Premium Belt** – Transmission Drive Fits PP125R38J & JA models For 12 HP with 36" & 38" deck (peerless drive only)	1	
75-106	130969 532130969	1/2" x 92-1/4"	**Premium Belt** – Mower Deck / Hydro Transmission For mower deck drive belt on 42" cut deck (1992–1999), & hydro transmission drive belt (2006–2010)	1	
175-106			**Belt** – Standard Version of 75-106		
75-163	131006 532131006	1/2" x 98-1/4"	**Premium Belt** – Mower Deck For 18 HP front engine tractor with 42" deck	1	
75-097	131264 532131264	1/2" x 78-3/8"	**Premium Belt** – Mower Deck For 36" mowers (1992–1999), & 44" mowers (1994)	1	
75-936	131290 532131290	1/2" x 88-1/4"	**Premium Belt** – Mower Deck For 38" & 44" riders, 38" & 44" lawn tractors with 11 HP thru 18 HP engines	2	
75-889	132801 532132801	1/2" x 52-5/16"	**Premium Belt** – Transmission For rear tine tillers (1992–2006)	1	
75-890	133035 532133035 532124970	1/2" x 41-3/8"	**Premium Belt** – Forward Drive For front tine tillers (1995–2004)	1	
75-195	137153 532137153	1/2" x 83-1/4"	**Premium Belt** – Ground Drive For 20 HP with 46" & 50" deck, models 1994–1997	1	
175-195			**Belt** – Standard Version of 75-195		
75-167	138255 532138255	1/2" x 95-1/4"	**Premium Belt** – Mower Deck For 42" & 50" decks with 20 HP Kohler engines	1	
75-169	139573 130801 160855 532139573	1/2" x 84-1/6"	**Premium Belt** – Mower Deck For primary mower drive belt, tractor to mower, 50" deck with 20 HP & 22 HP Kohler engines, & 46" deck with 18 HP Kohler engines (1994–1995) & (1997–1998)	2	
175-169			**Belt** – Standard Version of 75-169	2	

B

Belts

AYP

OREGON	Replaces	Size	Description	Type	Product Code
75-196	140218 532140218	1/2" x 84-3/16"	**Premium Belt** – Ground Drive For 20 & 22 HP models with 46" & 50" deck (1998 & newer)	1	
75-000	140294 532140294	1/2" x 82-1/4"	**Premium Belt** – Hydro Transmission For 42" & 44" cut, 18 & 18.5 HP lawn tractors with hydrostatic transmission	1	
175-000			**Belt** – Standard Version of 75-000	1	
75-099	144200 532144200 531007562 532131290	1/2" x 88-3/8"	**Premium Belt** – Mower Deck For 38" & 42" decks with double idler pulleys	1	
175-099			**Belt** – Standard Version of 75-099	1	
75-197	144959 532144959	1/2" x 95-3/8"	**Premium Belt** – Deck For 42", 46", & 50" deck (1995 & newer)	1	
175-197			**Belt** – Standard Version of 75-197	1	
75-170	148763 532148763	5/8" x 85-1/2"	**Premium Belt** – Mower Deck For primary mower drive belt, tractor to mower, 46" & 50" deck with 18 & 20 HP Kohler engines (1995–1997)	2	
175-170			**Belt** – Standard Version of 75-170	2	
75-164	137078 146527 157769 532137078 532157769 532146527	3/8" x 32-1/2"	**Premium Belt** – Drive For self-propelled, front-wheel drive on 22" walk-behind mowers with rear discharge (1997–1998)	1	
175-164			**Belt** – Standard Version of 75-164	1	
75-897	165632 532165632	1/2" x 112-1/8"	**Premium Belt** – Transmission For hydrostatic mowers (1999 & earlier)	1	
75-911	166060 532166060	3/8" x 38-1/4"	**Premium Belt** – Transmission For 21" rear bagger, self-propelled mowers (2000–2002)	2	
75-912	174368A 532174368	5/8" x 90-1/8"	**Premium Belt** – Mower Deck For primary mower drive, 48" cut (2001–2003)	1	
175-912			**Belt** – Standard Version of 75-912	1	
75-913	174883 532174883	5/8" x 97-3/16"	**Premium Belt** – Deck Drive For 42" cut (2002–2003)	2	
175-913			**Belt** – Standard Version of 75-913	2	
75-898	174978	1/2" x 83-3/8"	**Premium Belt** – Mower Deck For 36" mowers	2	
75-914	175436 532175436	3/8" x 32-1/4"	**Premium Belt** – Mower Deck For 21" rear bagger, self-propelled mowers (2002–2003)	1	

AYP

OREGON	Replaces	Size	Description	Type	Product Code
15-029	178138 532178138	1/2" x 87-5/8"	**Premium Belt** – Ground Drive For some lawn tractors (2003–2006)	1	
115-029			**Belt** – Standard Version of 15-029	1	
75-899	180214	1/2" x 87-3/8"	**Premium Belt** – Mower Deck For 38" mowers	1	
75-654	180808 174369 532180808	5/8" x 88-3/4"	**Premium Belt** – Deck For 48" mowers	1	
175-654			**Belt** – Standard Version of 75-654	1	
75-810	191273 532191273	5/8" x 142-1/2"	**Premium Belt** – V For deck drive on mowers, 54" cut	2	
175-810			**Belt** – Standard Version of 75-810	2	
75-892	193214 532193214	1/2" x 90-3/8"	**Premium Belt** – Mower Deck For 38" mowers (2006)	1	
115-205	196103 53219610	5/8" x 147-3/4"	**Belt** – Standard Belt for Deck Drive For many 54" mowers (2006–2012)	1	
75-893	196103 532196103	5/8" x 147-7/8"	**Premium Belt** – Mower Deck For 54" mowers (2006)	2	
175-893			**Belt** – Standard Version of 75-893	2	
15-020	196857 532196857	3/8 x 32-3/4	**Premium Belt** – Transmission Fits 21"self propelled models PP675B & XT625Y, Craftsman models 917.375350, 917.375361, 917.375810, 917.375820, & Husqvarna models 6522SH, 62522SH, 6522SL, 67522ES, XT22, & XT722	1	
75-894	197242 532197242	5/8" x 138-3/4"	**Premium Belt** – Mower Deck For 48" mowers (2006)	2	
175-894			**Belt** – Standard Version of 75-894	2	
75-895	197253 532197253	1/2" x 101-1/4"	**Premium Belt** – Mower Deck For 42" mowers (2006)	1	
175-895			**Belt** – Standard Version of 75-895	1	
15-022	405143 532405143	1/2" x 105-3/4"	**Premium Belt** – Mower Deck Fits 46" cut (2006–2010) mower models PB19546LT, PB195H46YT, PB20H46LT, PB20H46YT, PB22H46YT; Craftsman models 917.289541, 917.289542, 917.289543, 917.289620, 917.289630 & Husqvarna models 2146XLS, 2246XLS, 2346XLS, YTH20K46, YTH21K46, YTH2146XP, YTH22V46, & YTH2246	1	

B

Belts

OREGON	Replaces	Size	Description	Type	Product Code
AYP					
115-222	408010 183533	5/8" x 38"	**Standard Belt** – Impeller Drive Fits snowblower models 10527SBE (2003–2008), 10530SBE (2006), 1130SBE (2006–2008), 5524SB, 5524SE, 5524ST, 5524STE (2002–2008), 8024ST (2002), 8524ST (2004), 8527SB (2006), 9027ST (2002–2004), 924SB, & 927SB (2006–2008)	8	
115-220	408007	5/8" x 38-1/4"	**Standard Belt** – Impeller Drive Fits snowblower models 10527SB, 1130SB, 5524SB (2008), 14527SB, 15530SB, ST261E (2009), 924SB (2008–2010), 1650EXL, ST230E (2012), 924HV (2010–2013), 5524ST, ST276EP (2012–2013), 11524E, 14527E, & ST268EP (2013)	8	
115-221	408019	5/8" X 39-1/4"	**Standard Belt** – Impeller Drive Fits snowblower models 1130SB (2008), 13524SB, 14527SB, 15530SB, 16530SB, ST261E, ST276EPT (2009), 1330SB (2008–2009), 16527EXL, 16530EXL (2011), 1650EXL, ST2109E, ST268EP, ST276EP (2012), 11524E, 14527E (2010–2012), 924HV (2010–2013), 5524ST, & ST276EP (2012–2013)	8	
115-223	428454 532428454	1/2" x 29-1/2"	**Standard Belt** – Traction Drive Fits snow thrower models 1827EXLT & 130EXLT	1	
15-023	429636 532429636	1/2" x 101-1/2"	**Premium Belt** – Mower Deck Fits 42" cut mowers, 2009–2010 models PB195H42LT, PB2042YT, & XT195H42LT, Craftsman model 917.289610, & Husqvarna models LTH2042 & YTH2042	1	
Ariens					
75-906	07200004 7200004	1/2" x 36"	**Premium Belt** – Auger Drive Fits 924124, 924125, 924126, 924127, 924335, 924336, & 924337	1	
75-907	07200007 7200007	1/2" x 35-3/8"	**Premium Belt** – Auger Drive Fits 932105 & 932506	1	
15-152	07200026	21/32" X 121-7/8"	**Premium Belt** – PTO to Deck Drive Fits Zoom & Max Zoom mowers with 52" deck	4	
15-153	07200027	21/32" X 176-5/16"	**Premium Belt** – PTO to Deck Drive Fits Pro-Master 200 series mowers with 52" rear discharge decks	4	
15-154	07200028	21/32" X 131-13/16"	**Premium Belt** – PTO to Deck Drive Fits Zoom & Max Zoom mowers with 60" deck	4	
15-155	07200030	21/32" X 185-3/4"	**Premium Belt** – PTO to Deck Drive Fits Pro-Master 200 series mowers with 60" rear discharge decks	4	
15-157	07200039	5/8" X 78-7/8"	**Premium Belt** – Spindle Drive For Pro-Master 200 series mowers with 72" decks	7	
15-158	07200116	1/2" X 98"	**Premium Belt** – Deck Drive Fits Zoom mowers with 34" decks	1	

Ariens

OREGON	Replaces	Size	Description	Type	Product Code
75-908	07200623 07200020 7200020	1/2" x 37-3/8"	**Premium Belt** – Auger Drive Fits 926001, 926002, 926004, 926005, 926101, 926102, 926300, 926301, 926304, & 926504 raw edge	1	
15-221	07202300 72023	1/4" X 27-3/4"	**Premium Belt** – Traction Drive For 2-stage snow throwers (Set of 2)	7	
75-098	07204700 72047	3/8" x 35-3/4"	**Premium Belt** For snow throwers, older models with single belt	1	
15-190	07205200 72052	21/32" X 69-1/16"	**Premium Belt** – Deck Drive For Emperor models with 30" & 38" decks	7	
75-080	07205600 72056	1/2" x 32"	**Premium Belt** – Drive For front tine tiller drive, snow thrower auger drive	1	
75-067	07207400 72074	1/4" x 27-1/4"	**Premium Belt** For 6 HP "Sno-Thro" models, traction drive - set of 2	2	
15-192	07208100 72081	1/2" X 106-9/16"	**Premium Belt** – Deck Drive For models with 48"decks	1	
75-117	07208600 72086	1/2" x 40-1/4"	**Premium Belt** For snow throwers. Fits model 924082 with 8 HP engine	1	
75-096	07210800 07206700 07208300 07206100 72108	1/2" x 36-3/4"	**Premium Belt** For snowblowers Fits 925084 with 10 HP engine	1	
75-084	07211400 72114	1/2" x 34-3/4"	**Premium Belt** – Cogged Fits snow thrower drive on Trac Team 832004	6	
75-086	07216900 07211300 72169	1/2" x 65-1/4"	**Premium Belt** – Blade Drive Fits 831026, 30" cut (1981 & newer)	1	
75-087	07217100 07213800 72171	3/8" x 32"	**Premium Belt** – Cogged For SP drive on walk-behind mowers, newer models	7	
15-194	07213000 72130	1/2" X 38-5/8"	**Premium Belt** – Wheel Drive For 2-stage snow thowers with Tecumseh engines	7	
15-195	07213100 72131	3/8" X 35-7/8"	**Premium Belt** – Drive For 2-stage snow throwers	7	
75-909	07219100 07200021 7200021	1/2" x 38-3/8"	**Premium Belt** – Auger Drive Fits 926003, 926006, 926103, 926302, 926303, 926500, & 926501 raw edge	1	
15-188	07219600 051213 51213	1/2" X 127-5/8"	**Premium Belt** – Deck Drive For Zoom models with 40" decks	2	

B

Belts

OREGON	Replaces	Size	Description	Type	Product Code
Ariens					
15-201	07223800 72238	1/2" X 38-13/16"	**Premium Belt** – Hydro Transmission Drive Fits 1232, 1440 Sport Zoom, & Pro 200 mowers	7	
15-205	07226000 72260	1/2" X 120"	**Premium Belt** – PTO to Deck Drive Fits 2050 & 2250 Zoom mowers with 50" decks	7	
15-193	07232100 07209800 72098	3/8" X 33-1/8"	**Premium Belt** – Auger Drive For 22" single stage snow blowers & also on some 2- stage snow thowers as traction drive belt	7	
15-208	07234500	1/2" X 50"	**Premium Belt** – PTO to Deck Drive Fits EZR 1648 & EZR 2048 mowers	1	
15-210	07235500	1/2" X 73-7/8"	**Premium Belt** – Pump Drive Fits Zoom 2050· 992028 (000101 - 029999), EZR 1540, & EZR 1740 mowers	7	
75-983	07236200 7236200	1/2 x 37-15/16"	**Premium Belt** – Auger Drive Fits 924500, 924503, & 924506 raw edge	1	
15-211	07236300 72363	5/16" X 32-5/8"	**Premium Belt** – Auger Drive For single stage snow throwers	7	
15-169	07239200	1/2" X 67-3/4"	**Premium Belt** – Pump Drive Fits Zoom 2050 · 992028 (030000 -) & Zoom 2250· 992040 (031000 -) mowers	7	
15-170	07239300	21/32" X 126-7/8"	**Premium Belt** – PTO to Deck Drive Fits Zoom 2552XL & Zoom 2560XL mowers with 60" decks	1	
15-215	7241500 07241500	1-3/8" X 151-3/4"	**Premium Belt** – Deck Drive For Zoom series mowers with 48" decks	1	
15-216	7241700 07241700	1/2" X 128-13/16"	**Premium Belt** – Deck Drive For Zoom series mowers with 44" decks	1	
15-217	7241800 07241800	1/2" X 121-3/8"	**Premium Belt** – Deck Drive For Zoom series mowers with 40" decks	1	
15-181	07242800	21/32" X 50-1/4"	**Premium Belt** – Pump Drive Fits Pro-Master 200 series mowers	9	
75-983	07236200 7236200	1/2 x 37-15/16"	**Premium Belt** – Auger Drive Fits 924500, 924503, & 924506 raw edge	1	
115-200	07241600	1/2" x 142-3/4"	**Belt** – Standard Belt for Deck Drive For many 52" Zoom mowers	2	
Bad Boy					
115-201	041-1650-00	5/8" x 167-3/8"	**Belt** – Standard Belt for Deck Drive For 60" decks	2	
15-232	041-0219-00 41021900	21/32" X 218-15/16"	**Premium Belt** For AOS 60" gasoline models only	1	
15-233	041-0236-00 41023600	21/32" X 235-5/8"	**Premium Belt** For 61 Diesel EZ Ride	1	

B

OREGON	Replaces	Size	Description	Type	Product Code
Bad Boy					
15-234	041-1420-00 41142000	21/32" X 145-3/16"	**Premium Belt** – Deck Drive For 48 Pup or Lightning	1	
15-235	041-1470-00 41147000	5/8" X 149-15/16"	**Premium Belt** – Deck Drive For 48/50 ZT Elite or CZT	1	
15-236	041-1490-00 41149000	1/2" X 151-7/8"	**Premium Belt** For 52 Pup or Lightning	1	
15-237	041-1560-00	21/32" X 156-9/16"	**Premium Belt** – Deck Drive For 54 CZT Elite	1	
15-238	041-1890-00 41189000	21/32" X 188-7/8"	**Premium Belt** For 72 Pup or Lightning	1	
15-239	041-2375-00 41237500	21/32" X 237-3/4"	**Premium Belt**	1	
15-240	041-2525-00 41252500	21/32" X 251-3/8"	**Premium Belt** For 2007 72 diesel models only	1	
15-241	041-5048-00 41504800	21/32" X 80-3/16"	**Premium Belt** – Pump Drive For Pup, Lightning, Outlaw, Outlaw Extreme, or Outlaw XP	7	
15-242	041-5200-00 41520000	21/32" X 114-5/8"	**Premium Belt** For 36 ZT	1	
15-243	041-6027-00 041602700	21/32" X 131-5/8"	**Premium Belt** – Deck Drive For MZ 54" deck	1	
15-244	041-6400-00 041640000	1/2" X 66-3/8"	**Premium Belt** – Pump Drive For MZ, MZ Magnum, ZT Elite, or CZT	7	
Bobcat					
15-253	38136	21/32" X 96-7/8"	**Premium Belt** – Variable Speed Drive Fits M48-16, M54-12KA, M54-16, XM5400, & XM5401 mowers	2	
15-254	38275	21/32" X 82-13/16"	**Premium Belt** – Variable Speed Drive Fits XM3203, XM3204, XM3603, XM3604, XM4803, & XM4804 mowers	2	
15-255	38330	21/32" X 76-5/16"	**Premium Belt** – PTO Fits XM6150 mowers	1	
15-256	38331	21/32" X 104-7/8"	**Premium Belt** – Deck Drive For 61" decks	2	
15-257	38362	21/32" X 70-5/16"	**Premium Belt** – PTO to Deck For 54" decks	2	
15-258	38363	21/32" X 75-5/16"	**Premium Belt** – PTO to Deck For 61" decks	2	
15-259	38385	1/2" X 55-3/4"	**Premium Belt** – Pump Drive For Hydro midsize mowers	7	

Belts

Bobcat

OREGON	Replaces	Size	Description	Type	Product Code
15-260	38462	21/32" X 51-13/16"	**Premium Belt** – Deck Drive For midsize mowers with 32" decks	7	
15-261	38528	1-3/16" X 51-1/2"	**Premium Belt** – Wheel Drive For midsize mowers with variable speed drive	5	
15-262	48019	3/4" X 37-1/8"	**Premium Belt** – PTO For T-series Jaguar 4-wheel tractors	5	
15-266	48376	1-3/16" X 37-1/2"	**Premium Belt**	5	
15-247	2188128	1/2" X 62-7/8"	**Premium Belt** – Pump Drive For mowers with Hydro drive system	7	
15-248	2308052	1/2" X 46-1/8"	**Premium Belt** – Pump Drive For Hydro midsize power units	7	
15-249	2720815	21/32" X 95-1/8"	**Premium Belt** – PTO to Deck Drive Fits BZT2000 series, ZT200 series, Estate Pro, Z-Fastcat, Leo, Leo Plus, & others with 54" decks	7	
15-250	2720948 48047A	21/32" X 136-9/16"	**Premium Belt** – Deck Drive Fits FM-48S, FM-61S, & FM-74S front mount decks	4	
15-264	48238A	21/32" X 157-3/16"	**Premium Belt**	4	
15-265	48280A	21/32" X 117-1/16"	**Premium Belt**	4	
15-267	78030N	1/2" X 26"	**Premium Belt**	7	
15-268	78031N	3/8" X 26"	**Premium Belt** – Wheel Drive For 21" self-propelled mowers	7	
75-240	38073N 38016N	5/8" x 35-1/4"	**Premium Belt** – Transmission For all models	2	
75-221	38017N	5/8" x 44-5/16"	**Premium Belt** – Wheel Drive For cogged 32" & 48" walk-behinds	6	
75-072	38076N 38111 38015N	5/8" x 87-1/4"	**Premium Belt** – Mower Deck For 36" old style variable speed transmission	2	
75-058	38077N 38030N	5/8" x 93-1/4"	**Premium Belt** – Mower Deck For 48" blade drive	2	
75-212	38212	1-1/8" x 56-5/8"	**Premium Belt** Double groove for wheels on 5-speed mower	5	
75-095	38523	1-1/8" x 55"	**Premium Belt** – Double Groove, 1/2" Cogged For newer style model 67 series, 5-speed commercial mower	5	
75-128	38389	5/8" x 56-5/16"	**Premium Belt** – Cross Drive Deck For 36" XM series	1	
75-180	38440	5/8" x 85-1/4"	**Premium Belt** – Mower Deck For new style 48" decks on hydro mowers	2	

OREGON	Replaces	Size	Description	Type	Product Code
Bobcat					
75-130	38442	5/8" x 68-1/4"	**Premium Belt** – Mower Deck For new style 48" mower	2	
75-131	38463 38458	5/8" x 62-1/8"	**Premium Belt** – Mower Deck For 36" XM series mowers	2	
75-133	38528DF	1-1/8" x 51-5/16"	**Premium Belt** – Wheel Drive Double grooved for 36" XM series mowers	5	
75-193	128003	5/8" x 133-5/16"	**Premium Belt** – Mower Deck For 61" ZTR mowers	2	
75-125	128099	1/2" x 36-1/4"	**Premium Belt** – Transmission For XM series mowers	1	
75-207	2188134	5/8" x 101-5/16"	**Premium Belt** – Mower Deck For 61" ZTR rider	1	
15-101	2721477	5/8" x 57"	**Premium Belt** – Mower	8	
15-102	2721478	5/8" x 85"	**Premium Belt** – Mower Deck For 36" Cut	8	
15-103	2721642	1/2" x 49"	**Premium Belt** – Pump Drive	8	
15-104	4143636	1/2" x 69"	**Premium Belt** – Transaxle	8	
15-105	4163569	5/8" x 170"	**Premium Belt** – Mower Deck For 36", 42", 48", 52", & 61" mowers	1	
Bolens - See MTD					
Briggs & Stratton					
75-517	L 708044		**Premium** – V-Belt – NEW		
Bunton					
75-101	PG757	1/2" x 30-1/4"	**Premium Belt** Fits models BLM, ET10, & 760	1	
75-222	PLO511	5/8" x 53-5/8"	**Premium Belt** – Mower Deck For 32" & 36" mowers	1	
15-289	PLO543	1/2" X 43-1/8"	**Premium Belt**	7	
75-221	PLO619	5/8" x 44-5/16"	**Premium Belt** – Wheel For 32"–61" mowers, cog belt	6	
75-223	PLO643	1/2" x 50-3/8"	**Premium Belt** – Mower Deck For 28", 36", & 48" decks	1	
15-290	PLO648	21/32" X 30-7/16"	**Premium Belt**	7	
15-291	PLO661	21/32" X 56-15/16"	**Premium Belt**	7	

Belts

OREGON	Replaces	Size	Description	Type	Product Code
Bunton					
15-292	PLO848	5/8" X 40"	**Premium Belt**	7	
15-293	PLO861	21/32" X 117-1/8"	**Premium Belt**	7	
15-270	PL1443	1/2" X 45-3/4"	**Premium Belt**	7	
75-720	PL4275	1-5/32" x 45-1/8"	**Premium Belt** – 2V Banded For dual wheel drive on 36", 48", 52", & 61" cut mowers	5	
15-271	PL4511	21/32" X 54"	**Premium Belt**	7	
15-272	PL4513	21/32" X 57-5/16"	**Premium Belt**	1	
15-274	PL4732	5/8" X 63"	**Premium Belt**	7	
15-275	PL4733	21/32" X 56-13/16"	**Premium Belt**	7	
15-276	PL4734	1/2" X 95-15/16"	**Premium Belt**	7	
15-277	PL4739	5/8" X 64-7/8"	**Premium Belt**	7	
15-278	PL4740	1/2" X 102-1/16"	**Premium Belt**	7	
15-279	PL4811	5/8" X 63-3/8"	**Premium Belt**	7	
15-280	PL4813	1/2" X 47-1/16"	**Premium Belt**	7	
15-281	PL5039	21/32" X 40-3/8"	**Premium Belt**	7	
15-282	PL6011	21/32" X 44-5/16"	**Premium Belt**	7	
15-283	PL6062	21/32" X 70-15/16"	**Premium Belt**	7	
15-286	PL7332	21/32" X 122-13/16"	**Premium Belt**	7	
15-287	PL7436	21/32" X 123-5/16"	**Premium Belt**	2	
15-288	PL8519	21/32" X 131-3/4"	**Premium Belt**	7	
15-294	PM221	21/32" X 58-1/8"	**Premium Belt**	7	
15-269	128110	21/32" X 111-3/8"	**Premium Belt** – Deck Drive Fits BZT2000 series, ZT200 series, Estate Pro, Z-Fastcat, Leo, Leo Plus, & others with 48" decks	2	
75-207	218134	5/8" x 101-5/16"	**Premium Belt** – Mower Deck For 61" ZTR rider	1	
Bush Hog					
15-296	65482	21/32" X 46-1/2"	**Premium Belt** – Blade Drive Fits GT42 models	7	
15-297	66474	21/32" X 133-13/16"	**Premium Belt** – Drive Fits TM5 RM-2 rotary cutter SN 11-03985 & above	1	

B

Bush Hog

OREGON	Replaces	Size	Description	Type	Product Code
15-299	66552	21/32" X 70-1/8"	**Premium Belt** Fits TM4 RM-2 rotary cutter SN 11-01234 & above	2	
15-313	83120	1/2" X 69-3/8"	**Premium Belt** – Deck Drive Fits Turf Hog TH60 models (set of 2)	2	
15-314	83121	21/32" X 81-1/8"	**Premium Belt** – Deck Drive Fits Turf Hog TH72 models (set of 2)	2	
15-315	83136	7/8" X 101-3/8"	**Premium Belt** – Deck Drive Fits BD 90 rotary cutter models (set of 2)	2	
15-317	84302	21/32" X 120-3/4"	**Premium Belt** – Drive Fits DM 7 disc mowers & GHM 700/800/900/1800/1900 model hay mowers (set of 2)	2	
15-318	84303	21/32" X 121-1/8"	**Premium Belt** – Drive Fits DM 8 disc mowers & GHM 700/800/900/1800/1900 model hay mowers (set of 2)	2	
15-316	86326	1/2" X 64"	**Premium Belt** – Deck Drive Fits Turf Hog TH48 models (set of 2)	2	
115-203	88667	5/8" x 142"	**Belt** – Standard Belt for Deck Drive Fits finish mowers RDTH60, TD-1500, ATH600, & FTH600		
115-202	88843	5/8" x 155-1/2"	**Belt** – Standard Belt for Deck Drive Fits finish mowers RDTH72, TD-1700, ATH720, & FTH720		
15-302	90880	21/32" X 77-7/16"	**Premium Belt** – Deck Drive Fits FTH 480 rotary cutters	2	
15-303	93991	7/16" X 121-15/16"	**Premium Belt** – Deck Drive Fits ZT-1800, ZT-1800W, ZT-2200, & ZT-2200W models with 60" decks	7	
15-304	94144	1/2" X 106-3/4"	**Premium Belt** – Deck Drive Fits ZT-1800, ZT-1800W, ZT-2200, & ZT-2200W models with 48" decks	7	
15-305	94897	21/32" X 103-1/4"	**Premium Belt** – Lower Deck DriveAA Fits MTH 720 & TMD17 rotary cutters	4	
15-306	94898	21/32" X 160-3/8"	**Premium Belt** – Upper Deck Drive Fits MTH 720 & TMD17 rotary cutters	2	
15-307	94899	21/32" X 114-3/8"	**Premium Belt** – Lower Deck DriveAA Fits MTH 600 & TMD15 rotary cutters	4	
15-308	94900	21/32" X 148-1/2"	**Premium Belt** – Upper Deck Drive Fits MTH 600 & TMD15 rotary cutters	2	
15-309	96814	21/32" X 115-7/16"	**Premium Belt** – Deck Drive For Zero Turn mowers with 48" decks	1	
15-310	97315	9/16" X 132-3/8"	**Premium Belt** – Deck Drive For Zero Turn mowers with 60" decks	2	
15-295	50020136	21/32" X 123-15/16"	**Premium Belt** – Deck Drive For Zero Turn mowers with 54" decks	2	

Belts

OREGON	Replaces	Size	Description	Type	Product Code
Case					
15-320	C23359	1/2" X 70-15/16"	**Premium Belt**	7	
Club Car					
15-321	1016203	21/32" X 37-13/16"	**Premium Belt**	7	
15-322	101916701	3/8" X 34-3/16"	**Premium Belt**	7	
Comet					
15-331	203590	3/4" X 28-3/8"	**Premium Belt**	10	
15-333	203591	3/4" X 29-1/8"	**Premium Belt**	10	
15-335	203593A 203593	3/4" X 31-1/8"	**Premium Belt**	10	
15-337	203594	3/4" X 32-1/8"	**Premium Belt**	10	
15-339	203597	3/4" X 34-7/8"	**Premium Belt**	10	
Country Clipper					
15-350	D3389	1/2" X 114-1/16"	**Premium Belt**	7	
15-351	D3644	1/2" X 114-1/4"	**Premium Belt**	7	
15-352	D3645	21/32" X 111-7/8"	**Premium Belt**	1	
15-353	D3664	1/2" X 114-1/16"	**Premium Belt**	1	
15-354	D3671	1/2" X 46-5/8"	**Premium Belt**	7	
15-355	D3724	1/2" X 130-1/16"	**Premium Belt**	7	
15-356	D3727 D3727-W	1/2" X 147-1/16"	**Premium Belt**	1	
15-357	D3728	1/2" X 79-1/8"	**Premium Belt**	7	
15-358	D3733 D3733-W	21/32" X 160-5/8"	**Premium Belt**	7	
15-359	D3754	1/2" X 63-3/8"	**Premium Belt**	7	
15-360	D3764-W	1/2" X 181-5/8"	**Premium Belt**	1	
15-361	D3769	1/2" X 69-1/8"	**Premium Belt**	7	
15-363	D3777 D3777-W	1/2" X 53"	**Premium Belt**	1	
15-364	D3778	21/32" X 117-7/8"	**Premium Belt**	1	

Cub Cadet

OREGON	Replaces	Size	Description	Type	Product Code
15-581	30779		**Premium Belt** For WAM with 32" deck		
75-820	00050441P 50441	5/8" x 82-5/16"	**Premium Belt** – PTO Drive For Z-Force 48" deck	1	
15-583	01005378P 01005378 1005378	21/32" X 87-5/16"	**Premium Belt** – Deck Drive For Tank models (2003–2011)	1	
75-808	01000399	1/2" x 107-1/8"	**Premium Belt** – Deck Drive For Z-Force 48" deck	2	
75-818	01002391	5/8" x 62-15/16"	**Premium Belt** – PTO Drive For Z-Force 44" deck	2	
75-701	01004752 01002932	1/2" x 119-3/8"	**Premium Belt** – Deck Drive For Z-Force 60" deck	1	
75-821	01005011 01003968	5/8" x 83-1/4"	**Premium Belt** – PTO Drive For Z-Force 50" deck	1	
75-822	01005012 01004315	5/8" x 84-5/16"	**Premium Belt** – PTO Drive For Z-Force 60" deck	1	
15-106	01005374	1/2" x 105-1/4"	**Premium Belt** – Spindle Drive Fits M48 Tank & RECON 48 mowers	1	
15-107	01005375	1/2" x 114-1/4"	**Premium Belt** – Spindle Drive Fits M54 Tank mowers	1	
15-108	01005376	1/2" x 122"	**Premium Belt** – Spindle Drive Fits M60 Tank & RECON 60 mowers	1	
75-798	01008349	1/2" x 56-3/8"	**Premium Belt** – Traction Drive For Z-Force mowers	2	
15-109	01009787	5/8" x 80"	**Premium Belt** – Engine to Deck Fits Enforcer 44, Enforcer 48, Z-Force 44, Z-Force 48, & Z-Force 54	1	
75-811	02000103	1/2" x 81-1/2"	**Premium Belt** – Spindle Drive For deck drive, Z-Force with 44" deck	1	
15-110	02000154	1/2" x 83-1/4"	**Premium Belt** – Spindle Drive Fits Enforcer 48, Z-Force 48, & Z-Force 54	1	
15-111	02002648	1/2" x 58-1/4"	**Premium Belt** – Traction Drive Fits Enforcer 44, Enforcer 48, Enforcer 50, Z-Force 44, Z-Force 48, Z-Force 50, & Z-Force 54	1	
15-589	954-0125 954-0125A 754-0125 754-0125A	1/2" X 105-5/16"	**Premium Belt** – Lower Drive For 42" 2-stage snow throwers	2	

B

Belts

Cub Cadet

OREGON	Replaces	Size	Description	Type	Product Code
15-590	954-0142 754-0142 OEM-754-0142	3/8" X 31"	**Premium Belt** – Blade Drive For lawn edgers (1982–2001)	7	
15-593	954-0181 754-0181	1/2" X 100-1/16"	**Premium Belt**	1	
15-594	954-0190 754-0190 1917354	1/2" X 39-3/16"	**Premium Belt** – Tine Drive For front tine tiller	1	
75-079	954-0197 754-0197	1/2" x 117-1/8"	**Premium Belt** – Deck Drive Fits Gravely 14673P1	2	
15-595	954-0218 754-0218	9/16" X 58-7/8"	**Premium Belt** – Drive	2	
15-598	954-0264 754-0264	1/2" X 52-3/8"	**Premium Belt** – Deck Drive For riding mowers with 30" deck (1985–1996)	1	
15-601	954-0325 754-0325	1/2" X 57-1/8"	**Premium Belt** – Drive For rear tine tillers (1987–1992)	1	
75-021	954-0349 754-0349	1/2" x 79-5/16"	**Premium Belt** – Cross Drive For 46" side discharge, 600, 700, & 800 series (1987–2000)	1	
175-021			**Belt** – Standard Version of 75-021		
75-999	754-0434 954-0434	1/2 x 58-1/4"	**Premium Belt** – Forward Drive For model series 430, 440, & 450, rear tine tillers (1997 & newer)	2	
15-616	954-0438 754-0438 OEM-754-0438	1/2" X 51"	**Premium Belt**	2	
75-824	954-0461 754-0461	1/2" x 78-1/8"	**Premium Belt** – Traction Drive Fits traction drive SLT 1550, SLT 1554, & LT1000 series, LT1024, 1A17420369, & newer	2	
175-824			**Belt** – Standard Version of 75-824		
15-619	954-0483 754-0483 OEM-754-0483	3/8" X 38-1/8"	**Premium Belt**	7	
75-823	954-0640 754-0640	1/2" x 79-3/8"	**Premium Belt** – Traction Drive LT1018, LT1022, LT1024, & 10174H20368 & before	2	
15-623	954-0641 754-0641	1/2" X 105"	**Premium Belt** – Deck Drive For 38" decks	1	
75-655	954-0644 754-0644	1/2" x 60-3/8"	**Premium Belt** – Deck For 42" cut mowers	1	
75-656	954-0645 754-0645 954-0645A 754-0645A	1/2" x 67-1/4"	**Premium Belt** – Deck For 42" cut mowers	1	

Cub Cadet

OREGON	Replaces	Size	Description	Type	Product Code
15-588	954-3001 754-3001	21/32" X 91-13/16"	**Premium Belt** – PTO to Deck For garden tractors	2	
15-625	954-3004 754-3004 IH-59701-C1	1/2" X 78"	**Premium Belt** – Deck Drive For 44" decks	1	
75-658	954-3038 754-3038	1/2" x 61-1/4"	**Premium Belt** – Deck Drive For 1000 series, 38" cut mowers	1	
115-207	954-3041 754-3041	1/2" x 105"	**Belt** – Deck Spindle Drive For 46" & 48" mowers		
15-627	954-3045 754-3045	1/2" X 121-3/4"	**Premium Belt** – Deck Drive For 54" decks	2	
15-628	954-3048 754-3048	21/32" X 107-5/16"	**Premium Belt** – PTO to Deck For garden tractors	2	
15-629	954-3053 754-3053	1/2" X 104-7/16"	**Premium Belt** – Deck Drive For 48" decks	2	
75-134	954-3055A 754-3055A 754-0355	5/8" x 112-5/8"	**Premium Belt** – Deck Drive	2	
75-812	954-3068 754-3068	11/16" x 111-1/8"	**Premium Belt** – Deck Drive Fits 2000 series mowers with 46" & 48" cut	2	
75-659	954-3073 754-3073	1/2" x 62-3/8"	**Premium Belt** – Deck For 62"cut mowers	2	
115-208	954-3084 754-3084	1/2" x 37-5/8"	**Belt** – Front PTO Fits 3000 & GT3000 series tractors (set of 2)		
15-602	954-04003A 754-04003	3/8" X 32-15/16"	**Premium Belt**	7	
15-603	954-04013 754-04013	3/8" X 21-1/2"	**Premium Belt**	2	
15-604	954-04014 754-04014 OEM-754-04014	3/8" X 27"	**Premium Belt** – Alternator For 4x4 utility vehicles	7	
15-605	954-04047 754-04047	1/2" X 114-1/16"	**Premium Belt** – Deck Drive For 54" decks (2009 & newer)	1	
15-606	954-04055 754-04055	21/32" X 111-1/2"	**Premium Belt** – PTO to Deck For garden tractors with 42", 50", & 54" stamped decks (2011–2015)	1	
15-609	954-04100 754-04100	3/8" X 32-15/16"	**Premium Belt**	7	

Belts

Cub Cadet

OREGON	Replaces	Size	Description	Type	Product Code
15-613	954-04207 754-04207 OCC-754-04207	1/2" X 79-3/8"	**Premium Belt** – Ground Drive For lawn tractors (2009–2014)	1	
75-706	954-04033 754-04033 754-04033A 954-04033A	1/2" x 118-5/16"	**Premium Belt** – Deck Drive Fits LT1022, LT1045, & LT1046 46" deck	1	
175-706			**Belt** – Standard Version of 75-706		
15-013	954-04041 754-04041	5/8" x 111-5/16"	**Premium Belt** – PTO Fits GT2542 (2008 & before), GT2186-44, GT2186-48, GT2521-48, GT2544, LT2042, LT2138, & LT2180 with 42" deck	1	
75-886	954-04043 754-04043 954-04043B 954-04043A 754-04043A 754-04043B	1/2" x 58-1/8"	**Premium Belt** – Traction Drive Fits RZT42, RZT17 42" deck, RZT22, & RTZ50 50" deck	1	
75-710	954-04044 754-04044 954-04044A 754-04044A	1/2" x 134"	**Premium Belt** – Deck Drive Fits RZT22 & RZT50 50" deck	1	
175-710			**Belt** – Standard Version of 75-710		
75-714	954-04045 754-04045	1/2" x 109-1/4"	**Premium Belt** – Deck Drive Fits LT1042, RZT17, & RZT42 42" deck	1	
175-714			**Belt** – Standard Version of 75-714		
75-716	954-04048 754-04048	5/8" x 131-5/16"	**Premium Belt** – Deck Drive Fits LT1024 50" deck	1	
75-813	954-04060B 754-04060B 954-04060A 954-04060 754-04060 754-04060A	1/2" x 96-5/8"	**Premium Belt** – Deck Drive Fits LT1042 42" deck	1	
175-813			**Belt** – Standard Version of 75-813		
75-600	754-04062 942-04062	1/2'' x 77-7/8''	**Premium Belt** – Deck Drive Fits 38" cut decks used on 700 series (2005 & newer)		
75-814	954-04077 754-04077	5/8" x 133-13/16"	**Premium Belt** – Deck Drive Fits LT1050 & SLT1550 50" deck	1	
175-814			**Belt** – Standard Version of 75-814		

B

OREGON	Replaces	Size	Description	Type	Product Code
Cub Cadet					
75-815	954-04118 754-04118	1/2" x 122-1/2"	**Premium Belt** – Deck Drive Fits LT1045 & LT1046 46" deck	1	
175-815			**Belt** – Standard Version of 75-815		
15-025	954-04122 754-04122	1/2 x 90-1/4	**Premium Belt** – Engine to Deck Drive Fits 46" cut mowers, models 13**6**H*** (2006–2009)	1	
15-112	954-04138A	5/8" x 143"	**Premium Belt** – Deck Drive Fits RZT54	1	
15-026	954-04142 754-04142	1/2" x 91-1/2"	**Premium Belt** – Engine to Deck Drive Fits 46" cut mowers, models 13**7**H*** (2007–2009)	1	
75-816	954-04153 754-04153 754-04153A 954-04153A	1/2" x 122-1/8"	**Premium Belt** – Deck Drive Fits LT1045 & LT1046, 46" deck	1	
15-027	954-04219 754-04219	1/2" x 103"	**Premium Belt** – Mower Deck Drive Fits 46" cut mowers (2-blade deck), models 13**7**T*** & 13**9**T*** (2010–2011), Craftsman models 247.288851, 247.28886, 247.28881, & 247.28880	1	
15-028	954-04240 754-04240	1/2 x 162	**Premium Belt** – Mower Deck Drive Fits 50" cut mowers, models 13**9**P*** (2010) & Craftsman model 247.289810	1	
Dixie Chopper					
15-366	20256 2006B38R	21/32" X 41-1/4"	**Premium Belt** – Hydro Drive For Magnum, Sidewinder, LX2000 series, X2000 series, XF2000 series, XW2000 series, XXG5000 series, XXW4000 series, & XXWD5000 series mowers	7	
15-368	2006B130R 9907B130	9/16" X 132-3/8"	**Premium Belt**	7	
15-367	97346C158	7/8" X 162"	**Premium Belt**	7	
75-283	30203	5/8" x 104-3/4"	**Premium Belt** – Deck For 50" cut	2	
75-208	30204	5/8" x 81-1/16"	**Premium Belt** – Engine to Deck For 50" cut	2	
75-211	30236-0	5/8" x 128-5/16"	**Premium Belt** – Deck For 60" cut	2	
75-199	65080	5/8" x 82-1/8"	**Premium Belt** – Engine to Blade For Flatlander 50" & 60" deck	1	
75-661	9907B84	5/8" x 87-1/8"	**Premium Belt** For engine to deck	2	

Belts

OREGON	Replaces	Size	Description	Type	Product Code
Dixon					
15-386	6111 539116200	21/32" X 78-3/16"	**Premium Belt** – PTO to Deck For many models	2	
15-374	1684 539124267	1/2" X 43"	**Premium Belt** – Ground Drive For many cone drive units	2	
15-375	1714 539124279	1/2" X 52"	**Premium Belt** – Ground Drive For many Hydro drive units	2	
15-376	1860 539124328	1/2" X 57-1/8"	**Premium Belt** – Blower Drive For blower/bagger units used on 44" Ram & Speed ZTR models	2	
15-388	7725 539116685	21/32" X 72-1/2"	**Premium Belt** – Deck Drive Fits Zeeter models with 30" Decks & ZTR models with 30" & 42" decks	1	
15-369	11305 539118156	21/32" X 145-3/8"	**Premium Belt** – Deck Drive Fits Speed & Black Bear ZTR 44 models	1	
15-370	12033 539118766	21/32" X 139-1/8"	**Premium Belt** – Deck Drive Fits Silver Tip & ZTR models with 72" decks	1	
15-371	12172 539126934	21/32" X 144-7/8"	**Premium Belt** – Deck Drive Fits ZTR 8025 models	2	
15-373	1300A 539115238	21/32" X 100-1/4"	**Premium Belt** – Deck Drive Fits Grissly, Kodiak, Ram, & ZTR models with 50" decks	2	
15-372	539124279	1/2" X 52"	**Premium Belt**	2	
Dynamark - See Noma					
E-Z Roll					
75-101	S335	1/2" x 30-1/4"	**Premium Belt** For edgers	1	
Encore					
75-260	363211	1-1/8" x 52-1/4"	**Premium Belt** – Wheel	5	
75-956	363212	1/2" x 39-1/4"	**Premium Belt** – Transmission	1	
75-955	363312	1/2" x 51-1/4"	**Premium Belt** – Transmission For 36", 48", & 60" cut, set of 2 belts	8	
15-389	423018	21/32" X 145-9/16"	**Premium Belt**	7	
75-031	483030	5/8" x 88-1/4"	**Premium Belt** – Engine to Blade For 48" models	1	
15-390	483053	21/32" X 160-1/4"	**Premium Belt**	2	
15-394	523349	21/32" X 134-1/8"	**Premium Belt**	1	
15-395	523366	21/32" X 54-5/8"	**Premium Belt**	7	

Excel (Hustler)

OREGON	Replaces	Size	Description	Type	Product Code
75-662	781310	5/8" x 178"	**Premium Belt** – Deck For Super Z, 60" cut mowers	1	
75-663	781443	1/2" x 62-3/8"	**Premium Belt** For Super Z hydro pump	1	
75-664	782292	5/8" x 165-1/16"	**Premium Belt** – Deck For Super Z, 52" cut mowers	1	
75-665	784207	5/8" x 194-1/2"	**Premium Belt** – Deck For Super Z, 72" cut mowers	1	
15-017	784249	5/8''X 146-1/8''	**Premium Belt** – Deck Drive For Hustler FasTrak with 52" deck	1	
15-018	784322	5/8''X 138-1/2''	**Premium Belt** – Deck Drive For Hustler FasTrak with 44" deck	1	
75-755	789388	5/8" x 151-1/8"	**Premium Belt** – Deck Belt (wrapped) Fits FasTrak 54 & Mini Z 52	1	
75-756	791335	5/8" x 143-1/4"	**Premium Belt** – Deck (wrapped) Fits FasTrak 48, Mini Z 44, & Super Mini Z 44	1	
75-757	793828	1/2" x 116-5/16"	**Premium Belt** – Deck (wrapped) Fits FasTrak 36	1	
75-759	793893	1/2" x 127-1/2"	**Premium Belt** – Deck (wrapped) Fits FasTrak 42	1	
15-019	797720	5/8" x 177"	**Premium Belt** – Deck Drive Fits Hustler ATZ, XR7, & Super XR7 with 60" deck	1	

Exmark

75-509	109-7299	3/8" x 36"	**Premium Belt** – Lawn Mower Drive - NEW Fits Exmark ECXKA21 commercial 21	8	
75-510	103-4244	9/32" x 45/64"	**Premium Belt** – V - NEW Fits Exmark NAV20KC and NAV27KC models	3	
75-513	126-6626	21/32" x 13/32"	**Premium Belt** – V - NEW Fits Exmark RAE708GEM48300, RAS710CKC48300, RAX651GKA484A3	1	
15-404	323344 1-323344	21/32" X 49-1/16"	**Premium Belt** – Wheel Drive For Metro 5-speed mowers	7	
15-405	323734 1-323734	21/32" X 81-5/16"	**Premium Belt** – Deck Drive For Metro 5-speed mowers with 32" decks	1	
15-401	1323735 1-323735 323735	21/32" X 83-13/16"	**Premium Belt** – Deck Drive For Viking Hydro with 36"decks	1	
15-408	403024 1-403024	21/32" X 94-1/16"	**Premium Belt** – Deck Drive For Viking with 48"decks	2	

Belts

Exmark

OREGON	Replaces	Size	Description	Type	Product Code
15-409	403025 1-403025	5/8" X 52-1/16"	**Premium Belt** – Deck Drive For Metro mowers with 48" decks	7	
15-410	403088 1-403088	21/32" X 94-3/4"	**Premium Belt** – Deck Drive For Viking with 48"decks (1994–1997)	7	
15-411	403105 1-403105	21/32" X 55-9/16"	**Premium Belt** – Deck Drive For Metro & Viking mowers with 52" decks	7	
15-412	523175 1-523175	1/2" X 134-3/8"	**Premium Belt** – Deck Drive For Explorer with 60" decks	7	
15-413	543028 1-543028	21/32" X 89-5/16"	**Premium Belt** – Deck Drive For Turf Ranger with 52" decks (1993–1995)	1	
15-415	543523 1-543523	21/32" X 88-13/16"	**Premium Belt** – Deck Drive For Turf Ranger with 60" decks (1997–2005)	1	
15-416	543548 1-543548	1/2" X 36-5/8"	**Premium Belt** – Ground Drive For Turf Ranger (1991–2005)	7	
15-417	543749 1-543749	21/32" X 90-3/8"	**Premium Belt** – Deck Drive For Turf Ranger with 52" decks (1996–2005)	1	
15-418	603193 1-603193	1/2" X 93"	**Premium Belt** – Wheel Drive For Turf Tracer 5-speed mowers	7	
15-419	603295 1-603295	5/8" X 40-9/16"	**Premium Belt** – Transmission Drive For Turf Tracer 5-speed mowers	7	
15-420	603576 1-603576	1/2" X 101-1/4"	**Premium Belt** – Deck Drive For Turf Ranger with 52" decks (1995–2001)	7	
15-421	603582 1-603582	21/32" X 84-5/16"	**Premium Belt** – PTO to Deck Drive For Turf Tracer mowers with 52" decks	1	
15-424	633162 1-633162	3/4" X 58-1/4"	**Premium Belt** – Pump Drive For Lazer Z mowers (1995–1997)	9	
15-425	633853 1-633853	7/16" X 25-5/8"	**Premium Belt** – Alternator Drive For water-cooled Lazer Z mowers (1999–2001)	7	
15-426	653332 1-653332	1/2" X 37-1/2"	**Premium Belt** – Blower Drive For Ultra Vacs (44")	1	
75-240	303078 1-303078	5/8" x 35-1/4"	**Premium Belt** – Engine to Transmission For variable speed 32", 36", & 48" cut	2	
75-221	303079 323051 1-303079	5/8" x 44-5/16"	**Premium Belt** – Wheel Drive For all models with 32", 36", & 48" cut	6	
75-031	303080 1-303080	5/8" x 88-1/4"	**Premium Belt** – Main For 36" front cut variable speed & old style variable speed engine to blade	1	
75-181	303499 1-303499	5/8" x 90-1/8"	**Premium Belt** – Blade Drive Fits 48" cut, Viking Hydrostatic	2	

B

Exmark

OREGON	Replaces	Size	Description	Type	Product Code
75-226	323200 1-323200	5/8" x 84-3/16"	**Premium Belt** – Blade Fits 36" cut, Viking Hydrostatic	2	
75-227	323225 1-323225	5/8" x 52-1/16"	**Premium Belt** – Transmission Drive Fits Viking Hydrostatic	2	
75-177	323288 1-323288	1-1/8" x 49-5/8"	**Premium Belt** – Dual Wheel Drive Fits 36", 48", & 52" Metro models	5	
75-113	323300 1-323300 1-323300 1-543224 543224	5/8" x 87-1/4"	**Premium Belt** – Deck Fits 48" Metro models	1	
75-963	403174 1-403174	5/8" x 115-5/16"	**Premium Belt** – Deck Fits 48" deck on Metro gear & single belt drive above serial number 220,000	1	
75-230	413093 1-413093	5/8" x 137-1/8"	**Premium Belt** – Deck Drive Fits 48" cut Turf Tracer, deck belt for 44" Lazer Z	1	
75-292	413094 1-413094	5/8" x 104-1-16"	**Premium Belt** – Blade Drive For floating deck on 36" mid-range units	2	
75-231	413096 1-413096	5/8" x 35-2/16"	**Premium Belt** – Blade Clutch Fits Turf Tracer	2	
75-232	413308 1-413308	5/8" x 143-1/8"	**Premium Belt** – Deck Drive Fits 52" Turf Tracer	2	
75-114	603045 1-603045	1/2" x 112-3/8"	**Premium Belt** – Deck Fits 60" mower on Turf Tracer	1	
75-178	603306 1-603306	5/8" x 81-1/4"	**Premium Belt** – Engine to Deck Fits all 60" Turf Tracers & 52" serial numbers 84,000 & above	1	
75-186	633127 1-633127	5/8" x 146-1/8"	**Premium Belt** – Blade Drive Fits 60" side discharge on Lazer Z	1	
75-188	633173 1-633173	5/8" x 111-1/4"	**Premium Belt** – Mule Drive Fits Lazer Z	1	
75-960	633366 1-633366	5/8" x 128-13/16"	**Premium Belt** – Deck Fits 52" deck on Lazer Z liquid cooled & standard Lazer Z series	1	
75-967	643052 1-643052 109-0776	5/8" x 169-1/2"	**Premium Belt** – Deck Fits 72" on Lazer Z, XP Series, & standard Lazer Z series	1	
75-961	653368 1-653368	5/8" x 154-3/4"	**Premium Belt** – Deck Fits 52" deck on Lazer Z, HP series	1	
75-234	633569 1-633569	5-rib x 57-1/4"	**Premium Belt** – Hydro Pump Drive Fits Lazer Z, 5-rib	3	
75-235	653163 1-653163 103-4760	1/2" x 53-1/4"	**Premium Belt** – Hydro Pump Drive Fits Lazer Z	1	

Belts

Exmark

OREGON	Replaces	Size	Description	Type	Product Code
75-917	653416 1-653416 103-5589	1/2" x 51-3/8"	**Premium Belt** – Pump Drive Fits 52" Lazer HP	1	
75-236	653438 1-653438	1/2" x 39-5/8"	**Premium Belt** – Blower For 52"	1	
15-398	103-5598	21/32" X 26"	**Premium Belt** – Fan Pump Drive For water-cooled Lazer Z mowers (2004–2005)	9	
75-514	109-9023	5/8" x 219 1/4"	**Premium Belt** – Deck Belt – NEW Exmark Next Lazer Z and Lazer Z AS with 72" deck	1	
75-516	116-3111	5/8" x 157-3/4"	**Premium Belt** – Deck – NEW Exmark Vantage stand-on mowers with 52" deck	1	
15-399	103-6906 103-6906-S	9/16" X 47-5/8"	**Premium Belt** – Pump Drive For Lazer Z mowers (2005–2007)	9	
75-515	126-2538	5/8" x 163 1/2"	**Premium Belt** – Deck – NEW Exmark Turf Tracer X series walk behinds with 52" deck (2015–2016)	1	
15-427	116-7437 116-6893 1-653333 653333	1/2" X 38-1/2"	**Premium Belt** – Blower Drive For Ultra Vacs (48")	1	
115-704	126-2538	5/8" - 163 1/2	**Premium Belt** – Deck – NEW Exmark 52" Turf Tracer, X-Series		
75-957	103-0881	1/2" x 120-1/4"	**Premium Belt** – Mule Drive Fits Lazer Z & XP series with 60" & 72" deck	1	
15-113	103-2240	5/8" x 83-3/4"	**Premium Belt** – Deck Drive Fits some Turf Tracer 52"	1	
115-204	103-4014	5/8" x 116-3/16"	**Belt** – Mule Drive Fits Lazer Z (S/N 370, 000–439, 999), Lazer AS (S/N 720, 000 & up), Lazer AC (S/N 440, 000 & up), & Lazer LC (S/N 440, 000–599, 999)		
75-667	103-4760 653163 1-653163	1/2" x 52-7/16"	**Premium Belt** – Hydro Pump Fits Lazer Z with 44" & 48" decks	6	
15-114	103-4761	1/2" x 53"	**Premium Belt** – Pump Drive Fits some Lazer Z HP (2004–2007)	6	
15-004	103-6506	5/8" x 118-5/16''	**Premium Belt** – PTO Fits Lazer Z XS (S/N 440, 000 & up)	1	
15-115	109-4994	5/8" x 186"	**Premium Belt** – Deck Drive Fits some Lazer Z -E 52" & Next Lazer Z 52"	1	
15-005	109-5364	1/2'' x 146-1/4''	**Premium Belt** – Deck Fits Quest 48" deck (S/N 670, 000 & up)	1	

OREGON	Replaces	Size	Description	Type	Product Code
Exmark					
15-116	109-8070	5/8" x 176"	**Premium Belt** – Deck Drive Fits some Lazer Z-E 48" & Next Lazer Z 48"	1	
15-117	109-8073	5/8" x 199"	**Premium Belt** – Deck Drive Fits some Lazer Z-E 60" & Next Lazer Z 60"	1	
15-118	116-1953	1/2" x 73"	**Premium Belt** – Hydro Drive Fits some Lazer Z- E & Next Lazer Z	1	
15-119	116-3455	1/2" x 153-3/4"	**Premium Belt** – Deck Drive Fits some Pioneer-S 48" & Quest-SP Z 48"	1	
115-705	126-2539	5/8" - 173 3/4"	**Premium Belt** – Deck – NEW Fits Exmark 60" Turf Tracer, X-Series		
115-706	126-0783	5/8" - 136 1/3"	**Premium Belt** – Deck – NEW Fits Exmark 48" Turf Tracer, S-Series		
EZ-GO					
15-428	14153G1	1-3/16" X 44-15/16"	**Premium Belt**	7	
15-429	16548G1	7/16" X 35-5/8"	**Premium Belt**	7	
15-430	26414G01	7/16" X 35"	**Premium Belt**	7	
15-431	27077G02	1-3/16" X 40-3/4"	**Premium Belt**	7	
15-432	72054G01	1-3/16" X 41-13/16"	**Premium Belt**	7	
Ferris					
15-435	20824 502824	21/32" X 132-7/8"	**Premium Belt** – Deck Drive For mowers with 61" deck	4	
15-434	20873 5020873	21/32" X 115-3/4"	**Premium Belt** – Deck Drive For mowers with 48" deck	4	
15-436	21063 5021063	21/32" X 91-5/8"	**Premium Belt** – PTO to Deck For mowers with 61" deck	2	
15-437	21261 5021261	21/32" X 54-5/16"	**Premium Belt** – PTO to Deck For mowers with 48" deck	2	
75-946	21297	5/8" x 118-7/8"	**Premium Belt** – Deck Drive Fits Hydrowalk DDS with 61" deck		
15-438	21684 5021684	5/8" X 38-15/16"	**Premium Belt** – Mule Drive For mowers with 22HP to 27HP Kohler engines	7	
15-440	22062 5022062	3/4" X 106-11/16"	**Premium Belt** – Mule Drive For IS Z Series, S/N: 2269 & above	5	
75-943	22061	5/8" x 175-13/16"	**Premium Belt** – Deck Drive Fits IS3000Z with 61" deck	1	

Belts

OREGON	Replaces	Size	Description	Type	Product Code
Ferris					
75-944	22148	5/8" x 150-9/16"	**Premium Belt** – Deck Drive Fits IS1000Z with 52" deck	1	
75-945	22667	5/8" x 139-7/16"	**Premium Belt** – Deck Drive Fits IS1000Z with 48" deck	1	
75-954	22314	1/2" x 65-1/4"	**Premium Belt** – Transmission Drive Fits IS1000Z, IS3000Z, & IS4000Z, set of 2	1	
15-120	5022173	1/2" x 66-3/8"	**Premium Belt** – Pump Drive Fits some wide area walk-behind models	1	
15-121	5102035	5/8" x 106-3/16"	**Premium Belt** – Spindle Drive Fits Evolution 52" cut	1	
15-122	5102040	5/8" x 112"	**Premium Belt** – Engine to Deck Drive Fits Evolution 52" cut	1	
Grasshopper					
15-443	381904	1/2" X 34-1/4"	**Premium Belt** Fits models 1210, 1620, 1820, 1822, 718, 720, 721, 721D, 725, & 928D	7	
75-144	381914	1/2" x 36-1/2"	**Premium Belt** – PTO Fits rear engine 700 series	6	
15-444	382025	9/16" X 54-3/8"	**Premium Belt** Fits 9061 & 9561 mower attachments	7	
15-123	382034	5/8" x 60-3/4"	**Premium Belt** – Hydro Drive For some mid-mount mowers	8	
15-445	382037	21/32" X 65"	**Premium Belt** – Deck Drive For 52" decks	7	
15-446	382049	21/32" X 82-1/8"	**Premium Belt** Fits 6061 & 6261 mower attachments	7	
15-124	382082	1/2" x 120-1/4"	**Premium Belt** – Deck Drive Fits M152 deck	1	
15-125	382084	5/8" x 136"	**Premium Belt** – Deck Drive Fits 3452 & 9852	1	
15-126	382093	5/8" x 145-1/2"	**Premium Belt** – Hydro Drive Fits 329B & 335B	1	
75-669	382095	5/8" x 147-1/8"	**Premium Belt** – Mule drive	1	
15-127	382097	5/8" x 153-3/4"	**Premium Belt** – Hydro Drive Fits 428 diesel	1	
15-128	382099	5/8" x 163"	**Premium Belt** – Hydro Drive Fits 428D diesel	1	
15-449	382777	1/2" X 41"	**Premium Belt** Fits 9048 mower attachment (LH blade)	7	

OREGON	Replaces	Size	Description	Type	Product Code
Grasshopper					
15-450	382800	5/8" X 51-15/16"	**Premium Belt** Fits 9052 mower attachment	7	
15-451	382836	21/32" X 62-7/16"	**Premium Belt** Fits 9048 mower attachment (RH blade)	7	
Gravely					
15-030	201010 2010100	5/8" x 80-5/16"	**Premium Belt** – Deck Fits Pro-Stance models 1934FX with 34" deck, Pro-Walk models GR1336FX with 36" deck, & Everride Wasp with 36" deck	1	
15-218	9240 009240 20035300	1/2" X 37-5/8"	**Premium Belt** – Deck Drive For 40" decks	7	
15-184	41545 041545 07220600	1/2" X 34-7/8"	**Premium Belt** – Ground Drive For Pro Power units	7	
15-185	41599 041599 07220700	1/2" X 90"	**Premium Belt** – Wheel Drive For Pro Power units	7	
15-151	049028 07222300	5/8" X 52-13/16"	**Premium Belt** – Wheel Drive For many walk-behinds	7	
15-220	49029 049029 07222400	1/2" X 46-7/8"	**Premium Belt** – Wheel Drive For Pro 200 (set of 2)	7	
15-187	49270 049270 07222700	1/2" X 40"	**Premium Belt** – Transmission Drive For Pro 150 units	7	
15-188	51213 051213 07219600	1/2" X 127-5/8"	**Premium Belt** – Deck Drive For ZT models with 40"decks	2	
15-200	72231 07223100 051141	1/2" X 58-7/8"	**Premium Belt** – Pump Drive For Pro-Master 100 & Pro 300 series mowers	7	
15-201	72238 07223800	1/2" X 38-13/16"	**Premium Belt** – Transmission Drive For Pro 200 series units	7	
15-202	72242 07224200	1/2" X 109-1/2"	**Premium Belt** – Deck Drive For PM100Z series mowers with 50" decks	7	
15-222	72258 07225800	1/2" X 53"	**Premium Belt** – Wheel Drive For Pro 150 series mowers (set of 2)	7	
15-205	72260 07226000	1/2" X 120"	**Premium Belt** – Deck Drive For PM200 series mowers with 50" decks	7	

Belts

Gravely

OREGON	Replaces	Size	Description	Type	Product Code
15-208	72345 07234500	1/2" X 50"	**Premium Belt** – PTO to Deck Drive Fits ZT 2048 mowers	1	
15-213	72382 07238200 07227700 07221500	1/2" X 85-5/16"	**Premium Belt** – Deck Drive For Pro series mowers with 50" deck	1	
15-152	07200026	21/32" X 121-7/8"	**Premium Belt** – PTO to Deck Drive For PM & ZT series mowers with 52" side discharge decks	4	
15-153	07200027	21/32" X 176-5/16"	**Premium Belt** – PTO to Deck Drive Fits Pro-Master 200 series mowers with 52" rear discharge decks	4	
15-154	07200028	21/32" X 131-13/16"	**Premium Belt** – PTO to Deck Drive Fits Pro-Master 200 & ZT series mowers with 60" side discharge decks	4	
15-155	07200030	21/32" X 185-3/4"	**Premium Belt** – PTO to Deck Drive Fits Pro-Master 200 series mowers with 60" rear discharge decks	4	
15-156	07200032	21/32" X 149-1/2"	**Premium Belt** – PTO to Deck Drive For Pro-Master series mowers with 72" decks	4	
15-157	07200039	5/8" X 78-7/8"	**Premium Belt** – Deck Spindle Drive For Pro-Turn 400, Pro-Master 200, & Rapid XZ series mowers with 72" decks	7	
15-158	07200116	1/2" X 98"	**Premium Belt** – Deck Drive For Zoom & ZT series mowers with 34" deck	1	
15-159	07200433	21/32" X 138-5/8-1/16"	**Premium Belt** – PTO to Deck Drive For Pro-Master series mowers with 66" decks	4	
15-203	07225000 072250 07221200	1/2" X 37-7/16"	**Premium Belt** – PTO Drive For Pro 200 series mowers	7	
15-164	07234600	21/32" X 134-7/8"	**Premium Belt** – PTO Drive Fits PM310, PM250Z, PM260Z, & PM272Z mowers with 50" decks	1	
15-165	07234900	5/8" X 50-9/16"	**Premium Belt** – Deck Drive Fits PM310, PM250Z, PM260Z, & PM272Z mowers	7	
15-167	07235100	21/32" X 142-7/8"	**Premium Belt** – PTO Drive Fits PM310, PM250Z, PM260Z, & PM272Z mowers	1	
15-210	07235500	1/2" X 73-7/8"	**Premium Belt** – Deck Drive Fits PM250Z, PM260Z, & PM272Z mowers	7	
15-169	07239200	1/2" X 67-3/4"	**Premium Belt** – Pump Drive Fits PM models with hydraulic lift	7	
15-170	07239300	21/32" X 126-7/8"	**Premium Belt** – PTO Drive Fits PM models with 50" deck	1	
15-171	07239400	21/32" X 149-7/8"	**Premium Belt** – PTO Drive Fits PM models with 72" deck	1	

B

OREGON	Replaces	Size	Description	Type	Product Code
Gravely					
15-173	07240700	21/32" X 123-3/8"	**Premium Belt** – PTO Drive Fits models with 52" deck	1	
15-174	07241300	21/32" X 131-5/8"	**Premium Belt** – PTO Drive Fits models with 60" deck	1	
15-215	7241500 07241500	1-3/8" X 151-3/4"	**Premium Belt** – Deck Drive Fits ZT mowers with 48" decks	1	
15-216	7241700 07241700	1/2" X 128-13/16"	**Premium Belt** – Deck Drive Fits ZT mowers with 44" decks	1	
15-217	7241800 07241800	1/2" X 121-3/8"	**Premium Belt** – Deck Drive Fits ZT mowers with 40" decks	1	
15-179	7242000	21/32" X 67-3/4"	**Premium Belt** – Pump Drive Fits PM250Z, PM260Z, & PM272Z mowers & others	5	
15-180	07242300	1/2" X 146-1/8"	**Premium Belt** – PTO Drive Fits models with 60" deck	1	
15-181	07242800	21/32" X 50-1/4"	**Premium Belt** – Pump Drive Fits PM250Z, PM260Z, & PM272Z mowers & others	5	
15-031	7200036 7200036	5/8" x 56-1/4"	**Premium Belt** – Deck Fits models Rapid XZ 52, Pro-Master 152i, 152M, 152XDZ, 252H, 252HXDZ, 252M, & 252MXDZ, Pro-Turn 152, 252, & 452, & ZT 52HD & 2552HD with 52" decks	6	
15-032	7200038 7200038	5/8" x 63-1/4"	**Premium Belt** – Deck Fits models Rapid XZ60, Pro-Master 160i, 260H, 260HXDZ, 260M, & 260MXDZ, Pro-Turn 160, 260, & 460, & ZT 60HD, 2560HD, 2660, 2760, & 2760HD with 60" decks	6	
115-200	7241600 7241600	1/2" x 142-3/4"	**Belt** – Standard Belt for Deck Drive Fits many 52" ZT mowers		
15-033	TCU18848	5/8" x 109-5/16"	**Premium Belt** – Deck Fits Pro-Stance HR1952FX, 2352FL, & 2452FL, & Everride Wasp with 52" decks	1	
Great Dane					
15-452	D18004	1/2" X 62"	**Premium Belt**	7	
15-453	D18005	21/32" X 81-3/4"	**Premium Belt**	7	
15-454	D18006	21/32" X 55-3/8"	**Premium Belt**	7	
15-455	D18007	21/32" X 88-1/16"	**Premium Belt**	7	
15-457	D18087	21/32" X 77"	**Premium Belt**	7	
15-458	D18088	21/32" X 52-1/4"	**Premium Belt**	7	
75-671	D18303	1/2" x 68-5/8"	**Premium Belt** – Belt Fits hydro pump on Super Surfer	1	

Belts

OREGON	Replaces	Size	Description	Type	Product Code
Great Dane					
75-670	D18348	5/8" x 108-5/16"	**Premium Belt** – Engine to Deck Fits Super Surfer 48" cut mowers	1	
15-459	D18361	21/32" X 134-3/4"	**Premium Belt**	7	
75-242	D28028	5/8" x 132-5/8"	**Premium Belt** – Blade to Blade Fits 61" Chariot	4	
75-243	D28029	5/8" x 108-5/16"	**Premium Belt** – Blade Drive Fits Chariot	2	
15-460	D28030	1/2" X 76-1/16"	**Premium Belt**	7	
15-461	D28031	21/32" X 119-1/2"	**Premium Belt**	4	
15-462	D28125	1/2" X 73-7/8"	**Premium Belt**	7	
15-463	D28241	5/8" X 102-1/16"	**Premium Belt**	7	
15-464	GDU10025	1/2" X 65"	**Premium Belt** – Pump Drive Fits Great Dane Super Surfer (Series II) mower with 48", 52", or 61" decks	7	
15-465	GDU10228	21/32" X 168"	**Premium Belt** – Deck Drive Fits Great Dane Chariot/Chariot LX mower with 61" decks	1	
15-466	TCU18847	21/32" X 98-11/16"	**Premium Belt** – Deck Drive Fits Great Dane Super Surfer (Series II) mower with 48" decks	1	
15-467	TCU18849	21/32" X 127-1/16"	**Premium Belt** – Deck Drive Fits Great Dane Super Surfer (Series II) mower with 61" decks	1	
Honda					
75-501	22431-VG3-N01	35" - 3/8"	**Replacement Belt** – Blade Drive – NEW Wrapped clutching		
Husqvarna					
15-472	110411 539110411	1/2" X 56"	**Premium Belt**	1	
15-473	110832 539110832 510201101 917539110832	21/32" X 145-7/16"	**Premium Belt** – Deck Drive For 42" decks	1	
15-474	112529 539112529	21/32" X 175-1/8"	**Premium Belt** – Deck Drive For 52" decks	2	
15-477	0303352 513030352 506033033	5/16" X 34"	**Premium Belt**	7	
75-724	372720 506372720 506347420	3/8" x 34-5/8"	**Premium Belt** – Cut-Off Saw Fits models 371K (2003), 375K (2005), 371K, & 375K	6	

B

Husqvarna

OREGON	Replaces	Size	Description	Type	Product Code
75-108	532110883	1/2" x 98-1/2"	**Premium Belt** – Transmission Fits model GT180 (1990–1992)	1	
75-194	532110884	1/2" x 93-1/4"	**Premium Belt** – PTO Fits model GT180 (1990–1992)	1	
75-171	532125907	1/2" x 90-1/4"	**Premium Belt** – Transmission Fits models 2354GXLS (2009), 2748GLS (2008), 2754GLS (2010–2013), CTH126 (2013), CTH19530 (2012), GT48XLS (2008), GTH2648 (2011), GHT263T (2012), GHT264T, GHT26V54 (2012–2013), GTH3052 (1990–1991), LT125 (2011), LTH1438 (2007–2008), LTH1538 (2011–2013), LTH126 (2011–2013), LTH19530 (1990), YT120, YT125 (2007–2009), YTH20K46 (2008), YTH2242 (2013), & YTH2042	1	
175-171			**Belt** – Standard Version of 75-171	1	
75-106	532130969	1/2" x 92-1/4"	**Premium Belt** – Hydro Transmission Fits models 2042LS (2008), 2146XLS, 2246LS, 2346XLS, 2348LS (2006), GTH26K54, GTH2654 (2009–2010), LGT2554 (2006–2013), LGT2654 (2011–2012), LGT24K54, LGT2554, LGT2654 (2012), LGTH22V48 (2010), LGTH2454, LTH18538 (2009), LTH2042 (2011), LTH151 (2010–2012), LTH152 (2012), LTH154 (2011–2012), LTH174, LTH1842, LTH18538 (2011–2013), LTH2038, LTH2142 (2012–2013), YT42XLS (2012), YT46LS (2012–2013), YT48XLS (2012), YT54LS (2006–2008), YTH1542XPT (2006), YTH1848XPT, YTH20B42T, YTH20F42T (2012), LT2217A, LT2323A2 (2010–2012), & LT2223A2	1	
175-106			**Belt** – Standard Version of 75-106	1	
75-097	532131264	1/2" x 78-3/8"	**Premium Belt** – Deck Fits models LR100 (1995), LR110 (1994), LR12, LR111 (1992–1996), LR120 (1996–1998), LR121 (1999–2000), LR122 (1991), LT100 (1992), LT112 (1996–1998), & LT125	1	
75-889	532132801	1/2" x 52-5/16"	**Premium Belt** – Transmission Fits models 500HRTT (2003), 500RTT (2002–2004), 550CRTH (1998), 550CRTT (1999), 600CRT (2003), 650BRTT (2000), 650CRTA (2001), 650CRTB (2002), 650CRTC (2003–2008), 650RTT (2006–2009), 700DRT (2009), 700RTT (1997), CRT52 (1998), CRT53 (1997), CRT61 (2003), CRT650 (2009–2011), CRT900 (1999), CRTH550 (2011), CT2105R (2009–2012), DRT900 (2012), DRT70 (2009), RTT900 (2011), & TR430	1	
75-890	532133035	1/2" x 41-3/8"	**Premium Belt** – Forward Drive Fits model FT900 (2009–2010)	1	
75-195	532137153	1/2" x 83-1/4"	**Premium Belt** – Transmission Fits models GT200 (1993–1997) & GT2254 (2005)	1	
175-195			**Belt** – Standard Version of 75-195	1	
75-167	532138255	1/2" x 95-1/4"	**Premium Belt** – Deck Fits models CT126 (2011–2013), GT200 (1993–1994), LT126 (2011–2013), & SRD17530	1	

B

Belts

Husqvarna

OREGON	Replaces	Size	Description	Type	Product Code
75-169	532139573	1/2" x 84-1/8"	**Premium Belt** – Deck Fits models GT200 (1993–1996), GTH200 (1994–1998), GTH220 (1995–1999), GTH2250 (2001–2002), GTH250 (1999–2001), GTH 2550 (2001), & YTH180 (1996–1999)	2	
175-169			**Belt** – Standard Version of 75-169	2	
75-196	532140218	1/2" x 84-3/16	**Premium Belt** – Transmission Fits models GTH200 (1994–1999), GTH220 (1995–1999), GTH2250 (2000–2001), GTH2448 (2006), GTH2454 (1999–2000) GTH250 (2001), GTH2550 (2006), GTH2654 (2009), LGT2554 (2006), LTH1538 (2006), YTH1542, YTH1848, YTH20B42, YHT2242, YHT2448, & YHT2454	1	
75-000	532140294	1/2" x 82-1/4"	**Premium Belt** – Hydro Transmission Fits models LTH120 (1999–2000), LTH1342 (2000–2002), LTH140 (1994–1995), LTH1742 (2002–2003), LTH18542 (2003–2004), LTH2042 (2003–2004), LTH141 (2012–2013), YTH130 (2000–2001), YTH150 (1995–1999), YTH1542 (2000–2005), YTH1746 (2000–2002), YTH180 (1994–1999), YTH1842 (2002–2005), YTH1848 (2001–2005), YTH18542 (2004–2008), YTH2042 (2005), YTH2046 (2000–2001), YTH2048 (2001–2004), & YTH2148	1	
175-000	532140294		**Belt** – Standard Version of 75-000	1	
75-936	532144200 532131290	1/2" x 88-1/4"	**Premium Belt** – Deck Fits models LR125 (1991–1992), LR12 (1996), LRH125 (1995), LT120 (1996–1998), LT1238 (2000–2002), LT125 (1995–1996), LT1538 (2002–2003), LTH120 (1997–2000), LTH125 (1996), LTH130 (1996–1999), LTH140 (1995), LTH145 (1996), YT150 (1996), YT190 (1995), YTH145 (1999), YTH150 (1995–1999), YT160 (1997), YTH180 (1994), & YTH190 (1995)	2	
75-197	532144959	1/2" x95-3/8"	**Premium Belt** – Deck Fits models 2042LS (2007–2008), GT200 (1995–1997), GTH200 (1995–1996), GTH220 (1995–1999), GTH2250 (2000–2001), GTH250 (1999–2000), GTH2550 (2001), LT18542 (2004–2006), LTH1342 (2000–2002), LTH1742 (2002–2003), LTH18542 (2003–2004), LTH2042 (2003–2004), LTH174 (2011–2012), LTH1842 (2011–2012), LTH2038 (2012), LTH2142 (2011–2013), YTH130 (2000–2001), YTH150 (1998), YTH1542 (2006–2008), YTH1746 (2000–2002), YTH180 (1995–1999), & YTH1842 (2003)	1	
175-197			**Belt** – Standard Version of 75-197	1	
75-170	532148763	5/8" x 85-1/2"	**Premium Belt** – Deck Fits models GT200 (1995–1997), GTH200 (1999), GTH225, GTH2350 (2002), GTVH205 (1999–2000), YTH1746 (2000–2002), YTH180 (1995–1999), & YTH2046 (2000–2001)	2	
175-170			**Belt** – Standard Version of 75-170	2	
75-897	532165632	1/2" x 112-1/8"	**Premium Belt** – Hydro Transmission Fits models CTH130 (1999) & CTH150	1	
75-911	532166060	3/8" x 38-1/4"	**Premium Belt** – Transmission Fits models 6521RSA (2000) & 6521RSB (2001)	2	

B

Husqvarna

OREGON	Replaces	Size	Description	Type	Product Code
75-912	532174368	5/8" x 90-1/8"	**Premium Belt** – Deck Fits models GTH2248 (2002–2003), GTH250 (2002), GTH2548 (2001–2005), YTH1848 (2001–2005), YTH2148 (2003–2005), YTH2448 (2004–2005), YTH2548 (2004), YTH2748, & YTKH1848 (2003–2004)	1	
175-912	532174368		**Belt** – Standard Version of 75-912	1	
75-913	532174883	5/8" x 97-3/16"	**Premium Belt** – Deck Fits models LTH1542 (2005), YTH1342 (2003), YTH1452 (2001), YTH1542 (2001–2005), YTH18542 (2004–2008), YTH2042 (2005), YTH2242 (2003), & YTKH1542 (2003–2004)	2	
175-913	532174883		**Belt** – Standard Version of 75-913	2	
75-914	532175436	3/8" x 32-1/4"	**Premium Belt** – Transmission Fits models 7021CH1 (2004) & 70021CH1 (2005)	1	
15-029	532178138	1/2" x 87-5/8"	**Premium Belt** – Transmission Fits models YTH2148 (2004) & YTH2448 (2005)	1	
115-029			**Belt** – Standard Version of 15-029	1	
75-654	532180808	5/8" x 88-3/4"	**Premium Belt** – Deck Fits models GTH2248 (2002–2003), GTH250 (2002), GTH2548 (2002–2005), YTH1848 (2002–2005), YTH2148 (2003–2005), YTH2248 (2004), YTH2448 (2004–2005), YTH2748 (2004), & YTKH1848 (2003–2004)	1	
175-654			**Belt** – Standard Version of 75-654	1	
75-892	532193214	1/2" x 90-3/8"	**Premium Belt** – Deck Fits models LT131 (2012–2013), LT141 (2011–2012), LTH141 (2012–2013), & SRD17530 (2010–2011)	1	
115-205	532196103	5/8" x 147-3/4"	**Standard Belt** – Deck Fits models 2354GXLS (2009), 2754GLS (2008–2009), GT54LS (2012), GTH2454 (2006), GTH2654, GTH26K54, GTH24K54 (2012), GTH264T, GTH26V54, GTH3052TF, LGT2554 (2009–2010), LGT2654 (2006–2013), LGT24K54 (2011–2012), LGT2554 (2012), LGT2654 (2011–2012), LGTH2454 (2010), LGTH26V54 (2012), YT54LS (2012), YTH24V54 (2010), YTH2454 (2006–2010), YTH25K54 (2010–2012), YTH26V54 (2010–2012), & YTH2754 (2011–2012)	1	
15-020	532196857	3/8" x 32-3/4"	**Premium Belt** – Transmission Fits model 62522SH (2005–2007), 62522SL, & XT722FE (2009–2012)	1	
75-894	532197242	5/8" x 138-3/4"	**Premium Belt** – Deck Fits models 2348LS (2008), 2748GLS, GTH2448 (2006), GTH2648 (2006–2008), YTH1848 (2006), YTH23V48 (2010), YTH2348 (2006–2010), YTH2448 (2006), YTH22K48 (2012), YTH2348 (2010–2012), YTH23K48 (2011), YTH23V48 (2010–2013), & YTH24K48 (2011–2012)	2	
175-894			**Belt** – Standard Version of 75-894	2	

Belts

OREGON	Replaces	Size	Description	Type	Product Code
Husqvarna					
75-935	532419271 532126520	1/2" x 88-1/4"	**Premium Belt** – Transmission Fits models CT126 (2010), LR12 (1994), LR121 (1996–1997), LR122 (1999–2000), LR125 (1992–1995), LRH125 (1994–1995), LT125 (1996–1998), LTH19530 (2011–2013), CT126 (2011–2013), CTH126 (2010–2013), CTH19530 (2012–2013), LTH126 (2011–2013), LTH19530 (2011–2013), & SRD17530 (2011–2012)	1	
15-023	532429636	1/2" x 101-1/2"	**Premium Belt** – Deck Fits models LT152 (2011), LT1942 (2012), LT2223A2 (2010), LTH152 (2010–2012), LTH174 (2011), LTH1842, LTH2142 (2013), YTA19K42 (2011–2012), YTH2042 (2009–2013), YTH22V42 (2011–2013), & YTH23V42 (2012–2013)	1	
15-024	539110410	1/2" x 105-1/8"	**Premium Belt** – Deck Fits models CZ4217 (2006), CZ42175, Z4217 (2004–2006), Z4218 (2004–2007), Z4219 (2007), Z4824, & Z5426	1	
75-269	539110859 539101956	1-1/8" x 45-1/2"	**Premium Belt** – Wheel Drive Fits models W3212 (2000–2001), W3213, W3613, W3614, W4814, W4815, W3213 (2004–2008), W3613, W4815, WG3213, WG3613, & WG4815	5	
15-819	539111949 539103687	5/8" X 151-7/8"	**Premium Belt** – Deck Fits models iZ4217 (2008), iZ5221, iZ5223, iZ6152, iZ4817 (2004–2007), iZ4818 (2004), iZ4819 (2005–2008), iZ4821 (2004–2008), TRD48 (2009), ZTHKH4818 (2000–2002), ZTHKH4820, ZTHKW4818, & ZTHKW4821	1	
15-129	539114557	5/8" x 154"	**Premium Belt** – Deck Fits models LSZ4622 (2008), LSZ5422, LSZ5424, MZ5225 (2007), RZ4219 (2009), RZ4619, RZ4620, RZ5422, RZ5424, RZ5422 (2010–2013), RZ5424, RZ5426, & RZ54i	1	
15-022	584453101 532405143	1/2" x 105-3/4"	**Premium Belt** – Deck Fits models 2146XLS (2008), 2246LS, 2346XLS, YT46LS (2012), YTH20K46 (2006–2010), YTH21K46 (2009), YTH2146XP (2006–2008), YTH22V46 (2009–2010), YTH2246 (2009), YTH2246 (2006), YTH18K46 (2012), YTH20K46 (2011–2012), YTH2146 (2012–2013), YTH21K46 (2011–2012), YTH223 (2010), YTH224 (2012), YTH2246 (2011–2012), YTH22V46 (2012–2013), & YTH23K46 (2011–2012)	1	
Hustler - See Excel					
John Deere					
15-511	AM102190	1/2" X 43-5/16"	**Premium Belt**	7	
75-976	GC00073	3/8" x 39-1/16"	**Premium Belt** – Drive Fits JS-61, 21" walk-behind mower	1	

John Deere

OREGON	Replaces	Size	Description	Type	Product Code
7F5-918	GC00081	3/8" x 35-1/8"	**Premium Belt** – Transmission Drive Fits JS63 series mowers	8	
15-034	GX10062	1/2" x 106-1/8"	**Premium Belt** – Traction Drive Fits Sabre models 1438GS, 1438HS, 15.538GS, 15.538HS, 1542GS, 1542HS, 15.542HS, 1742GS, & 1742HS	1	
75-979	GX20006	1/2" x 88-5/8"	**Premium Belt** – Transmission Drive Fits models 105, 115, 125, 135, 145, 155C, D110, D120, D130, D140, D150, D160, D170, L105, L107, L108, L110, L111, L118, L120, L130, LA110, LA115, LA120, LA125, LA130, LA135, LA140, LA145, LA150, LA155, LA160, LA165, & LA175	2	
75-919	GX20072 GY20570	1/2" x 103-15/16"	**Premium Belt** – Mower Deck Drive For L series mowers	1	
175-919			**Belt** – Standard Version of 75-919		
75-992	GX20305 GY20571	1/2" x 139-11/16"	**Premium Belt** – Deck drive For 48" cut, new L series mowers	2	
175-992			**Belt** – Standard Version of 75-992		
75-799	GX21395	5/8" x 161-9/16"	**Premium Belt** – Deck Drive Fits 190C, D170, G110, LA150, & LA175	1	
75-800	GX21833	1/2" x 141-3/8"	**Premium Belt** – Deck Drive Fits D140, D150, D160, L120, L130, LA130, LA140, LA145, LA155, LA165, X140, & X165 models	2	
75-978	GX22036 GX20241	1/2" x 92-3/8"	**Premium Belt** – Transmission Drive For L-100 series lawn tractor	1	
75-806	GX22036	1/2" x 92-5/16"	**Premium Belt** – Traction drive Fits 102, D100, L100, & LA100 Set of 2	1	
15-483	GY20572	9/16" X 65-1/4"	**Premium Belt**	7	
15-485	M117608	9/16" X 60-1/16"	**Premium Belt** – Primary Deck Drive Fits models 240, 245, 260, 285, 320, 325, 335, 345, 355, GT225, GT235, GT242, GT262, GT275, LX255, LX266, LX277, LX279, LX288, & others	7	
15-486	M119872	1/2" X 93-3/4"	**Premium Belt** – Primary Deck Drive Fits models 240, 245, 260, 265, 285, 320 with 48" decks	7	
15-487	M125383	1-1/4" X 56-3/4"	**Premium Belt** – Torque Converter Drive Fits 6X4 & Diesel Gators	7	
15-488	M136927	1/2" X 108-1/16"	**Premium Belt** – Hydro Transmission Drive Fits model G100 Sabre, 1842GV, 1842HV, 1848GV, 1848HV, 1948GV, 948HV, 2148HV, 2048HV, 2254HV, 2354HV, & 2554HV, & Scotts S2048, S2348, & S2554	1	

Belts

John Deere

OREGON	Replaces	Size	Description	Type	Product Code
15-490	M141627	21/32" X 120-9/16"	**Premium Belt** – Secondary Deck Drive Fits 54C decks	4	
15-491	M142997	1-3/16" X 129-1/16"	**Premium Belt** – Secondary Deck Drive Fits 62C decks	4	
15-492	M143888 M163989	21/32" X 112-9/16"	**Premium Belt** – Secondary Deck Drive Fits mid-mount 48C decks	4	
15-493	M147278	1/2" X 90"	**Premium Belt** – Drive Fits Powerflow material collection system for 48" decks	7	
15-494	M148556	1/2" X 54-9/16"	**Premium Belt** – Primary Deck Drive Fits models SST15, SST16, & SST18	7	
15-497	M154295	21/32" X 150-5/16"	**Premium Belt**	7	
15-498	M154960 M143923	21/32" X 120-15/16"	**Premium Belt** – Secondary Deck Drive Fits 54 decks	1	
15-499	M155343	1/2" X 60"	**Premium Belt** – Deck Drive Fits Z225 Eztrak residential zero turn (080001 -)	2	
15-500	M155368	21/32" X 189-3/8"	**Premium Belt** – Deck Drive Fits X320, X324 Select Series tractors & X500, X520, X534, X540 Multi-Terrain tractors with 48" decks	1	
15-501	M44121 M40016 M42250	21/32" X 67-1/16"	**Premium Belt** – Variable Speed Drive Fits 100 & 200 series lawn & garden tractors	7	
75-975	M41960	1/2" x 102-1/8"	**Premium Belt** – Deck For 47" deck on 200 series tractors	2	
75-973	M47765	1/2" x 84-1/4"	**Premium Belt** – Primary Drive For 47" deck on 200 series tractors	1	
75-672	M74747	1/2" x 105-1/8"	**Premium Belt** – Motion drive Fits STX30, STX38, & STX48	1	
115-206	M77988 M82734	5/8" x 60"	**Belt** – Standard Belt for Deck Drive Fits many 38" mowers 100 series, 200 series, GT200 series, LX170 & LX180 series		
75-248	M82462	1/2" x 66-1/4"	**Premium Belt** – Secondary Drive Sheave Fits series 970 mowers 111, 111H, 112L, 160, 165, 170, 175, 180, & 185, blade to blade belt on LX172, LX176, LX178, LX186, LX188, & STX3	1	
175-248			**Belt** – Standard Version of 75-248		
75-360	M84075	1/2" x 79-1/4"	**Premium Belt** – Transmission Drive Fits 111H, 112L, 116H, 165, 175, & 185 models	1	
75-974	M88184	1/2" x 60-1/4"	**Premium Belt** – Transmission Drive Fits 108, 111, 112L, 116, STX30, & STX38 lawn tractors	1	

B

John Deere

OREGON	Replaces	Size	Description	Type	Product Code
75-246	M110978	1/2" x 102"	**Premium Belt** – Hydro Drive Fits LX172, LX173, LX176, LX178, LX186, & LX188	1	
75-296	M111534	5/8" x 130-3/16"	**Premium Belt** – Deck Fits 54" deck on model F725 & F735	4	
75-295	M110313 M154958	5/8" x 111-5/16"	**Premium Belt** – Secondary Mower Fits 48" deck on models 240, 245, 260, 265, 285, 320, 325, 345, LX186, LX188, LX255, LX277, LX279, & LX278 lawn & garden tractors	1	
175-295			**Belt** – Standard Version of 75-295		
75-972	M112006	1/2" x 63-1/4"	**Premium Belt** – Mower Drive Fits GX70, GX75, GX85, GX95, RX63, RX73, RX75, RX95, SX75, SX85, & SX95 riding mowers	1	
75-984	M118685	5/8" x 120-1/8"	**Premium Belt** – Secondary Drive Fits 54" deck on G-100 tractor & Scotts model S2554	1	
75-247	M119539	1/2" x 137-3/4"	**Premium Belt** – Mower Drive Fits STX38 & STX48 lawn tractors	1	
15-037	M120381	5/8(BB) x 125-3/8"	**Premium Belt** – Deck Fits models F910, F911, F912, F915, F925, F930, F932, & F935 with 60" side discharge decks, models 425, 445, & 455LGT with 60" mid-mount decks, & models X465, X475, X485, X495, X575, X585, X595, X700, X720, X724, X728, X740, & X748 with 60D decks before serial number 030001	4	
75-703	M122106	1/2" x 71-1/4"	**Premium Belt** – Primary Drive Fits GS25, GS30, GS45, & GS75 walk-behind mowers	1	
15-035	M122674	1/2" x 92-5/8"	**Premium Belt** – Deck Fits Sabre models 1338G, 1538H, & 1638H with 38" deck	1	
75-708	M122907	5/8" x 50-1/8"	**Premium Belt** – Drive Fits G15, GS25, GS30, GS45, & GS75 walk-behind mowers	6	
75-297	M123281	1/2" x 143-1/8"	**Premium Belt** – Mower Drive Fits model LT166 with 38" & 46" deck	1	
75-299	M126536	1/2" x 114-3/8"	**Premium Belt** – Mower deck drive Fits models LT133, LT150, LT155, LT160, LT166, & LT180	1	
175-299			**Belt** – Standard Version of 75-299		
75-298	M125218	1/2" x 96-1/4"	**Premium Belt** – Mower deck Fits 38" black mower deck on model STX38 lawn tractor, S/N 210001 & higher	1	
15-036	M135782	5/8(BB) x 137-3/8"	**Premium Belt** – Deck Fits Z-Trak models F620, F680, & F687 with 60" deck	4	
75-300	M143019 M118684	5/8" x 65-1/8"	**Premium Belt** – Primary mower drive For LX & GX garden tractors, 48c/54c decks	6	
175-300			**Belt** – Standard Version of 75-300		

B

Belts

John Deere

OREGON	Replaces	Size	Description	Type	Product Code
15-130	M151276	5/8" x 97-5/16"	**Premium Belt** – Traction Drive Fits X500 series Multi-Terrain tractors	1	
75-807	M152284	1/2" x 93-9/16"	**Premium Belt** – Traction drive Fits X300 series	1	
75-801	M153160	5/8" x 157-13/16"	**Premium Belt** – Deck Drive Fits X300 series, 42M mulching deck before S/N 150001	4	
75-802	M154601	1/2" x 143-5/8"	**Premium Belt** – Deck Drive Fits X300 series, 38" deck with tension handle	1	
75-803	M154621	1/2" x 146 -3/16"	**Premium Belt** – Deck Drive Fits X300 & X304 models, 42" deck	1	
175-803			**Belt** – Standard Version of 75-803		
15-131	M154897	1/2" x 66-9/16"	**Premium Belt** – Engine to Deck Drive Fits X300 42" cut & X500 48" & 54" cut Multi-Terrain tractors	8	
75-804	M155525	1/2" x 142-5/16"	**Premium Belt** – Deck Drive Fits X300 series, 38" deck without tension handle	1	
75-222	PT12668 PT8666	5/8" x 53-5/8"	**Premium Belt** – Engine to Blade For 32" & 36" commercial walk-behind mowers	1	
75-221	PT8675	5/8" x 44-5/16"	**Premium Belt** – Wheel For 32"–52" mowers, cogged belt	6	
75-223	PT8676	1/2" x 50-3/8"	**Premium Belt** – Blade to blade For 28", 36", & 48" decks	1	
15-009	TCU13195	5/8'' x 117-5/16''	**Premium Belt** – Mule Drive Fits 737 & 757 mid-mount, Z-Trak mower, S/N 030000 & below	1	
15-010	TCU13198	5/8'' x 142''	**Premium Belt** – Deck Spindle Drive Fits 737 mid-mount Z-Trak with 60" deck, 777 Max-Frame Z-Trak with 60" deck, 757 mid-mount Z-Trak with 60" deck, & 797 Max-Frame Z-Trak with 60" deck	2	
15-038	TCU16036	7/8" x 173-1/2"	**Premium Belt** – Deck Fits Z-Trak models 777 & 797 with 72" deck	1	
15-507	TCU16092	21/32" X 150-7/8"	**Premium Belt** – Deck Drive Fits 717 Mini-Frame Z-Trak & Great Dane Chariot mowers with 48" decks	1	
15-039	TCU16495	5/8" x 126"	**Premium Belt** – PTO Drive Fits Z-Trak models 777 & 797	1	
15-508	TCU16841	1-1/8" X 32-5/16"	**Premium Belt** – Pump Drive Fits 777 & 797 Max-Frame Z-Trak mowers	1	
15-040	TCU20002	1/2" x 54-9/16"	**Premium Belt** – Mule Drive Fits Z-Trak Mini-Frame models 717A, 717E, & 727A	2	

B

OREGON	Replaces	Size	Description	Type	Product Code
John Deere					
15-041	TCU25673	1/2" x 69-1/4"	**Premium Belt** – Traction Drive Fits Z-Trak Pro Series models Z930A, Z950A, Z960A, Z970A, & Z925A before S/N 020001	2	
15-042	TCU26297	5/8" x 180-1/4"	**Premium Belt** – Deck Fits Z-Trak Pro Series models Z920A, Z930A, Z950A, Z960A, & Z925A with 60" deck before S/N 020001	1	
Kees / Yazoo					
15-951	100023	21/32" X 94-1/16"	**Premium Belt**	7	
15-952	100024	21/32" X 52-1/16"	**Premium Belt**	7	
15-954	101141	21/32" X 54-1/16"	**Premium Belt**	7	
15-955	101228	1/2" X 49-1/16"	**Premium Belt**	7	
15-956	101736	21/32" X 106-5/16"	**Premium Belt**	1	
15-957	101996	21/32" X 99-13/16"	**Premium Belt**	1	
15-958	102549	21/32" X 143-5/8"	**Premium Belt**	1	
15-959	106339	1/2" X 159-3/16"	**Premium Belt**	1	
75-269	100026	1-1/8" x 45-1/2"	**Premium Belt** – Wheel drive For double "V" cogged for 36" & 48"	5	
75-687	104335	5/8" x 163-1/4"	**Premium Belt** – Deck For Max 2 series with 52" deck	1	
75-688	104336	5/8" x 183"	**Premium Belt** – Deck For Max 2 series with 61" deck	1	
75-036	363143	5/8" x 88-7/8"	**Premium Belt** – Blade drive For 36"	2	
75-221	363144	5/8" x 44-5/16"	**Premium Belt** – Wheel For variable speed 32", 36", & 48"	6	
75-240	363145	5/8" x 35-1/4"	**Premium Belt** – Engine to transmission For variable speed 32" & 36"	2	
75-058	483013	5/8" x 93-1/4"	**Premium Belt** – Blade drive For 48"	2	
15-961	205-505	1/2" X 80-1/8"	**Premium Belt**	4	
15-962	205-513	21/32" X 96-1/2"	**Premium Belt**	4	
15-963	205-514	21/32" X 116"	**Premium Belt**	4	

Belts

OREGON	Replaces	Size	Description	Type	Product Code
King Kutter					
15-512	167133	21/32" X 135-7/8"	**Premium Belt**	2	
15-513	167148	1/2" X 151-5/16"	**Premium Belt**	2	
15-514	167149	21/32" X 151-7/8"	**Premium Belt**	9	
15-515	167163	1-3/8" X 165-13/16"	**Premium Belt**	9	
Kubota					
15-516	1G062-97012 14911-97010	3/8" X 37-5/8"	**Premium Belt** – Fan Fits B21, B2400, B2410, B2910, B7610, B7800, F2260, F2400, F2560, F2680E, F2880F, F3060, F3680, & FZ2400	2	
15-517	15481-97010	1/2" X 65"	**Premium Belt**	2	
15-519	62421-62310	1/2" X 41"	**Premium Belt** – Set of 2	1	
15-522	66101-25080 HH6610-25000	21/32" X 33-1/2"	**Premium Belt** – PTO	2	
15-525	70050-94495	21/32" X 176-3/8"	**Premium Belt**	2	
15-526	70050-94497	21/32" X 102-13/16"	**Premium Belt**	2	
15-529	70713-34770	21/32" X 84-1/16"	**Premium Belt**	2	
15-535	76505-34710	1/2" X 95-15/16"	**Premium Belt** Fits G1800 & G1900	1	
15-536	76516-61510	21/32" X 62-5/16"	**Premium Belt** Fits T1700H	2	
15-538	76529-34710	1-3/16" X 111-15/16"	**Premium Belt** – Deck Fits B1550, B1750, G1800	9	
15-539	76539-34710	1-3/16" X 120"	**Premium Belt** – Deck Fits B1550, B1750	9	
15-541	76553-34710	1-1/8" X 141"	**Premium Belt**	9	
15-544	K5645-34710	1-3/16" X 119-1/2"	**Premium Belt** – Deck Fits ZD18, ZD21, ZD28	9	
15-545	K5651-34710	1-1/8" X 129-5/8"	**Premium Belt** – Deck Fits F2560E, F3060	9	
15-546	K5651-34711	21/32" X 129-1/16"	**Premium Belt**	9	
15-547	K5671-34710	21/32" X 137-1/2"	**Premium Belt** – Deck Fits B3030, B7800, F3060, ZD28	9	
15-548	K5677-34710	21/32" X 135-9/16"	**Premium Belt** Fits ZD28, ZD326P, ZD331LP	9	

OREGON	Replaces	Size	Description	Type	Product Code
Kubota					
15-549	K5700-34710 K5700-34712	1-3/16" X 103-15/16"	**Premium Belt**	9	
15-550	K5763-34710	1-3/16" X 119-1/2"	**Premium Belt**	9	
15-011	K5351-34710	1-1/4"(2V) x 113-3/16"	**Premium Belt** – Deck Spindle Drive, 2A Banded Fits 54" cut models B2320, B2620, & B2920 with RCK54-29B, B7400, B7500, B7510, & B7610 with RCK54-75B, BX1500 with RCK54-15BX, BX1800, BX1830 BX22, BX2200, BX2230, BX23LB-B, BX23LB-T with RCK54-22BX deck, BX1850, BX1860, BX2350, BX2360, BX24, BX25, BX2660 with RCK54-23BX, & ZD321 with RCK54-321Z	9	
15-043	K5764-34710	1-1/4"(2V) x 112-11/16"	**Premium Belt** – Deck For ZD & ZG models with 54" deck	9	
15-012	K5647-34710	1-1/4"(2V) x 123-7/16"	**Premium Belt** – Deck Spindle Drive, 2A Banded Fits 60" cut models F2680, F2880 with RCK60R-36 & RCK60P-F36 decks, F2880, F3080, F3680 with RCK60P-F36 & RCK60R decks, & ZD21, ZD25, ZD28, ZD323, ZD326P, ZD331LP, & ZG327 with 60" decks	9	
Kuhn Belt					
15-553	83101670	5/8" X 98-7/8"	**Premium Belt**	2	
Lawn-Boy					
15-561	200555 705361	3/8" X 45-9/16"	**Premium Belt**	7	
15-559	234594 702553	3/8" X 46-5/16"	**Premium Belt**	7	
115-703	110-9429	32-1/10 X 3/8"	**Premium Belt** – Blade Belt – NEW 10634, 10732, 10734, 17732, 17734 & fits all 20-inch self-propelled Lawn-Boy models (2008–2013)	1	
Lesco					
15-570	68093	21/32" X 56-5/16"	**Premium Belt**	1	
15-571	700151	1-3/16" X 52-3/4"	**Premium Belt**	9	
15-572	705010	1/2" X 47"	**Premium Belt**	1	
15-573	705375	1/2" X 114-1/16"	**Premium Belt**	1	
15-574	705376	1/2" X 122-5/16"	**Premium Belt**	1	
15-575	705377	21/32" X 91-7/16"	**Premium Belt**	1	
15-576	705378	21/32" X 87-7/16"	**Premium Belt**	1	
15-566	07200504	21/32" X 84-5/16"	**Premium Belt**	1	
15-567	7225500	1/2" X 40-1/2"	**Premium Belt**	7	
15-568	7243600	1-3/16" X 50-1/2"	**Premium Belt**	5	

Belts

OREGON	Replaces	Size	Description	Type	Product Code
Little Wonder					
75-101	177	1/2" x 30-1/4"	**Premium Belt** Fits edgers models GE-1 & GE-2	1	
Manco					
15-577	5959	3/4" X 27-1/4"	**Premium Belt**	10	
Massey Ferguson					
15-578	515382M1	7/8" X 45-3/4"	**Premium Belt**	7	
15-579	515383M1	21/32" X 60-13/16"	**Premium Belt**	7	
McLane					
75-120	1060	1/2" x 19-1/4"	**Premium Belt** For edgers	1	
75-101	2058	1/2" x 30-1/4"	**Premium Belt** For edgers	1	
75-123	4060	1/2" x 20"	**Premium Belt** For reel mowers	1	
15-580	7102	1/2" X 24-1/2"	**Premium Belt**	2	
MTD					
15-581	30779 00030779	21/32" X 79-9/16"	**Premium Belt** – Deck Drive Fits 1332 walk-behind mowers	1	
75-148	954-0101A 754-0101A 754-0101	1/2" x 35"	**Premium Belt** Fits 4 HP & 5 HP 20" single stage snow throwers models 150-190 & Yardman model 285-295	1	
15-589	954-0125 754-0125 754-0125A	1/2" X 105-5/16"	**Premium Belt** – Lower Drive Fits 190-032 & 190-8232-stage snow thrower attachments (2000–2008)	2	
75-502	54-04260	34-1/8 - 3/8"	**Premium Belt** – Deck – NEW Wrapped, clutching two-stage snow throwers and walk-behind mowers	1	
75-365	754-0131 954-0131	3/8" x 35-1/2"	**Premium Belt** – Drive Fits snow thrower models 314-600 & 314-800, & rider model 50748	6	
15-590	954-0142 754-0142 OEM-754-0142	3/8" X 31"	**Premium Belt** – Shaft Drive For wheeled lawn edgers	7	
75-145	954-0145A 954-0145 754-0145A 754-0145	5/8" x 69-5/16"	**Premium Belt** – Blade Fits 38" deck on 500, 600, 480, & 890 series (1971–1987)	1	

B

MTD

OREGON	Replaces	Size	Description	Type	Product Code
75-518	754-05106 954-05106 754-05106A	1/2" x 60"	**Premium Belt** – Deck – NEW Wrapped Clutching Fits 28" Decks (2017 and newer)	1	
75-004	954-0151 754-0151	5/8" x 67"	**Premium Belt** – Engine to Variable Speed Fits models 300, 600, & 490 series (1971–1999)	2	
15-593	954-0181 754-0181	1/2" X 100-1/16"	**Premium Belt** – Spindle Drive Fits 195-957-000 & 19957S42" mower decks	1	
15-594	954-0190 754-0190	1/2" X 39-3/16"	**Premium Belt** – Tine Drive For front tine tillers (1985–1995)	1	
75-090	954-0194 754-0194	1/2" x 45-1/4"	**Premium Belt** – Auger Drive Fits snowblower model 980	1	
75-079	954-0197 754-0197	1/2" x 117-1/8"	**Premium Belt** – Deck Pulley Fits 50" deck on 900 series garden tractors	2	
15-595	954-0218 754-0218	9/16" X 58-7/8"	**Premium Belt**	2	
75-008	954-0230 754-0230	1/2" x 56-1/4"	**Premium Belt** – Engine to Mower Fits garden tractors models 700, 800, & 900 with 42" & 50" decks (1977–1990)	1	
75-009	954-0240 754-0240	5/8" x 35-1/8"	**Premium Belt** – Pulley to Transmission Fits variable speed 500 series (1984–1996)	1	
75-012	954-0241A 954-0241 754-0241A 754-0241	5/8" x 35-1/8"	**Premium Belt** – Engine to Pulley Fits variable speed 500 series (1982–1998)	1	
175-012			**Belt** – Standard Version of 75-012	1	
15-598	954-0264 754-0264	1/2" X 52-3/8"	**Premium Belt** – Deck Drive For riding mowers with 30" deck (1985-1996)	1	
75-016	954-0266A 954-0266 754-0266A 754-0266	1/2" x 85-1/4"	**Premium Belt** – Transmission Drive Fits 600 series 4-speed tractors (1985–1986)	1	
75-002	954-0280A 954-0280 754-0280A 754-0280	45/64" x 53-3/8"	**Premium Belt** – Engine to Pulley Fits variable speed 300, 400, 500, 600, & 700 series (1982–1998) Use with Oregon® 75-281	1	
175-002			**Belt** – Standard Version of 75-002		
75-281	954-0281 754-0281	5/8" x 44-3/16"	**Premium Belt** – Pulley to Transmission Fits variable speed 300, 400, 500, 600, & 700 series (1985–1998) Use with Oregon 75-002	1	
75-018	954-0293 754-0293	1/2" x 74-1/8"	**Premium Belt** – Deck Spindle Fits 44" side discharge 600, 700, & 800 series riders (1984–1990)	2	

Belts

MTD

OREGON	Replaces	Size	Description	Type	Product Code
15-601	954-0325 754-0325	1/2" X 57-1/8"	**Premium Belt** – Gear Case Drive For rear tine tillers (1986–1992)	1	
75-020	954-0343 754-0343	3/8" x 31-1/4"	**Premium Belt** – Traction Drive Fits self-propelled mowers (1986–1998), & rear wheel drive, side discharge, 2-stage snow thrower models E600E to 6150	1	
75-091	954-0346 754-0346	3/8" x 30-5/16"	**Premium Belt** – Wheel Drive Fits 600 & 700 series snow blowers, model 400 self-propelled mower with gearbox rear wheel drive, & rear discharge mowers (1986–1998)	1	
75-021	954-0349 754-0349	1/2" x 79-5/16"	**Premium Belt** – Cross Drive Fits 46" side discharge 600, 700, & 800 series (1987–2000) & MTD Yardman Revolution 2001 & newer	1	
75-035	954-0350 754-0350	5/8" x 64-1/4"	**Premium Belt** – Engine to Deck Fits 46" cut, 100, 700, & 800 series (1987–1996)	1	
75-023	954-0355 754-0355	1/2" x 67-1/4"	**Premium Belt** Fits 32" cut "D" 300 series decks (1987–1989)	1	
75-024	954-0358 754-0358	7/8" x 54-5/8"	**Premium Belt** – Pulley to Engine For variable speed 800 series, 2-speed garden tractor (1988–1996)	2	
75-118	954-0362 754-0362	7/8" x 47-7/8"	**Premium Belt** – Drive Transmission For 800 series variable speed, 2-speed garden tractors (1990–1996)	1	
75-025	954-0364 754-0364	5/8" x 68-1/4"	**Premium Belt** – Lower Engine Pulley Fits deck on 36" cut, 400, 600, & 800 series (1989–1998)	1	
175-025			**Belt** – Standard Version of 75-025	1	
75-157	954-0367 754-0367	3/8" x 34-3/4"	**Premium Belt** Fits single stage snow thrower models 140 & 181 (1990–1996)	1	
75-027	954-0369 754-0369	3/8" x 32-3/4"	**Premium Belt** – Drive Fits 22" self-propelled, rear wheel drive, side discharge 200, 500, 700, & 800 series riders (1990–1998)	1	
75-119	954-0370 754-0370	5/8" x 49-1/8"	**Premium Belt** – Pulley to Transmission Fits variable speed 600 & 700 series models (1989–2000)	1	
175-119			**Belt** – Standard Version of 75-119	1	
75-028	954-0371A 954-0371 754-0371A 754-0371	5/8" x 74-1/4"	**Premium Belt** – Deck to Lower Engine Fits riders with 42" side discharge, "G" series deep deck (1989–1996)	1	
175-028			**Belt** – Standard Version of 75-028	1	

B

MTD

OREGON	Replaces	Size	Description	Type	Product Code
75-158	954-0431 954-0430B 954-0430A 954-0430 754-0431 754-0430B 754-0430A 754-0430	3/8" x 35-1/4"	**Premium Belt** – Drive Fits 5 HP dual stage snow throwers, models E600E to 615D (1992–1997) Matched set of 2, priced per set	6	
175-029			**Belt** – Standard Version of 75-029	1	
75-029	954-0433 754-0433 754-0329A	5/8" x 69-1/4"	**Premium Belt** Fits 38" deck on 600 series riders 754-0329A & 954-0329A	1	
75-999	954-0434 754-0434	1/2 x 58-1/4"	**Premium Belt** – Forward Drive Fits 430, 440, & 450 series, rear tine tillers (1997 & newer)	2	
15-616	954-0438 OEM-754-0438 754-0438	1/2" X 51"	**Premium Belt** – Gear Case Drive For rear tine tillers (1994–2008)	2	
75-159	954-0439 754-0439	5/8" x 60-1/4"	**Premium Belt** – Engine to Deck Fits 46" deep deck on 600 series (1992–1996)	1	
75-161	954-0440 754-0440	1/2" x 99-3/16"	**Premium Belt** – Deck Fits 46" deck on 600 series tractors (1992–1998)	2	
75-160	954-0441 754-0441	1/2" x 76-1/8"	**Premium Belt** – Transmission to Engine Fits 42" 600 series lawn tractors (1993–1995)	2	
75-109	954-0443A 954-0443 754-0443A 754-0443	1/2" x 90-1/2"	**Premium Belt** – Mower Deck Fits rear discharge mower model 765	4	
75-674	954-0446	5/8" x 46-1/4"	**Premium Belt** – Drive Fits variable drive 800 series tractors	1	
75-675	954-0453	5/8 X 36-1/2"	**Premium Belt** – Drive Fits variable drive Yard Bug	1	
75-995	954-0467A 954-0467 754-0467A 754-0467	5/8" x 91"	**Premium Belt** – Lower Drive Fits 600 series auto drive mowers (1999–2003)	1	
175-995			**Belt** – Standard Version of 75-995	1	
75-993	954-0468 754-0468	5/8" x 41-3/16"	**Premium Belt** – Upper Drive Fits 600 series auto drive mowers (1999–2003)	1	
175-993			**Belt** – Standard Version of 75-993		

B

Belts

MTD

OREGON	Replaces	Size	Description	Type	Product Code
75-361	954-0472 754-0472	5/8" x 83-1/4"	**Premium Belt** – Engine to Deck For 42" auto drive units, 1999 model with electric PTO	1	
75-362	954-0474 754-0474	5/8" x 102-1/8"	**Premium Belt** – Engine to Deck Fits 46" lawn tractor with electric PTO clutch (1999 & newer) & MTD Yardman Revolution (2001 & newer)	1	
75-363	954-0475 754-0475	5/8" x 107-13/16"	**Premium Belt** – Deck to Lower Engine Pulley For auto drive step through frame on 50" garden tractor (1999 & newer)	2	
75-364	954-0476 754-0476	5/8" x 100-1/4"	**Premium Belt** – Engine to Deck Belt For 46" deck on auto drive lawn tractors with electric PTO	1	
15-619	954-0483 754-0483	3/8" X 38-1/8"	**Premium Belt** – Transmission Drive For 22" front wheel drive self-propelled mowers (2000–2002)	7	
75-263	954-0485 754-0485	5/8" x 97-1/4"	**Premium Belt** – PTO For 42" deck with manual PTO (2000 & newer)	1	
75-264	954-0486A 954-0486 754-0486A 754-0486	5/8" x 67-1/4"	**Premium Belt** – PTO For 46" deck with manual PTO (2000 & newer), deck pulley to lower engine pulley	1	
75-676	954-0497	1/2" x 60-3/8"	**Premium Belt** – PTO to Deck Fits 600 serires riders with 42" deck (2 belt type)	1	
175-676			**Belt** – Standard Version of 75-676	1	
75-677	954-0498	1/2" x 67-1/4"	**Premium Belt** – Deck Fits 600 series riders with 42" deck (2 belt type)	1	
175-677			**Belt** – Standard Version of 75-677		
75-994	954-0642 754-0642	5/8" x 138-3/16"	**Premium Belt** – Deck Drive Fits 54" auto drive model with electric PTO	1	
175-994			**Belt** – Standard Version of 75-994	1	
15-623	954-0641 754-0641	1/2" X 105"	**Premium Belt** – Deck Drive For 38" decks	1	
75-092	754-0935 954-0935	1/2" x 31-1/4"	**Premium Belt** – Drive Fits SP models 352R & 359R, traction drive for models 640, 642, 646, 660, & 666 snow blowers	1	
15-629	954-3053 754-3053	1/2" X 104-7/16"	**Premium Belt** – Spindle to Gear Box Drive Fits 190-0322-stage snow thrower attachments (2009–2013)	2	
15-602	954-04003A 954-04003 754-04003	3/8" X 32-15/16"	**Premium Belt** – Transmission Drive For 22" front wheel drive self-propelled mowers (2002–2005)	7	
15-603	954-04013 754-04013	3/8" X 21-1/2"	**Premium Belt** – Wheel Drive For 2-stage snow throwers (2004–2014)	2	

MTD

OREGON	Replaces	Size	Description	Type	Product Code
15-604	954-04014 754-04014	3/8" X 27"	**Premium Belt** – Auger Drive For 2-stage snow throwers (2004–2014)	7	
15-609	954-04100 754-04100	3/8" X 32-15/16"	**Premium Belt** – Transmission Drive For 22" front wheel drive self-propelled mowers (2006–2010)	7	
15-613	954-04207 754-04207	1/2" X 79-3/8"	**Premium Belt** – Hydro Transmision Drive Fits 13AA925, 13AP91G,13AP93G 13AP925, 13AQ92G, 13AR91P, 13AT915, 13AV91G, 13AX915, 13AX91K, & 13AX93K (2010–2014)	1	
75-673	754-04001 754-04001A 954-04001 954-04001A	5/8" x 69-3/16"	**Premium Belt** – Engine to Variable Drive Pulley Fits 600 series riders (2003 & newer)	2	
175-673			**Belt** – Standard Version of 75-673	2	
75-709	954-04002	5/8" x 31-15/16"	**Premium Belt** – V Fits variable drive on 600 series tractors (2002 & newer)	8	
75-249	754-04032B 754-0465 954-04032B 954-0465	3/8" x 36-1/4"	**Premium Belt** – Self-Propel Fits 21", 400 & 500 series (1998 & newer)	1	
15-013	754-04041 954-04041	5/8" x 111-5/16"	**Premium Belt** – PTO Fits GT2542 (2008 & earlier), GT2186-44, GT2186-48, GT2521-48, GT2544, LT2042, LT2138, & LT2180 with 42" deck	1	
115-219	954-04050 754-04050	1/2" X 35"	**Standard Belt** – Auger Drive Fits 2-stage snow throwers (2005–2013)	6	
75-600	754-04062 942-04062	1/2'' x 77-7/8''	**Premium Belt** – Deck Drive Fits 38" cut decks on 700 series (2005 & newer)		
15-053	954-04093	3/8" x 35-7/8"	**Premium Belt** – Self-Propel Fits models 12AG836E, 12AG839E, 12AV829C, 12AV834Q, 12AV835Q, 12AV838Q, 12AV839Q, & 12BV829Q	2	
15-025	754-04122 954-04122	1/2" x 90-1/4"	**Premium Belt** – Engine to Deck Drive Fits 46" cut mowers, models 13**6**H*** (2006–2009)	1	
15-112	954-04138A	5/8" x 143"	**Premium Belt** – Deck Drive Fits RZT54	1	
15-026	754-04142 954-04142	1/2" x 91-1/2"	**Premium Belt** – Engine to Deck Drive Fits 46" cut mowers, models 13**7**H*** (2007–2009)	1	
15-052	954-04201A	3/8" x 36"	**Premium Belt** – Snow Thrower Wheel Drive Fits models 31AH54TG, 31AH55LH, 31AH55TH, 31AH64EG, 31AH65FH, 31AH65LG, 31AM62EE, 31AM63EF, 31BM62KE, & 31BM63LF (2009–2011)	1	

B

Belts

OREGON	Replaces	Size	Description	Type	Product Code
MTD					
15-027	754-04219 954-04219	1/2" x 103"	**Premium Belt** – Mower Deck Drive Fits 46" cut mowers (2 blade deck), models 13**7**T*** & 13**9**T*** (2010–2011), Craftsman models 247.288851, 247.28886, 247.28881, & 247.28880	1	
15-028	754-04240 954-04240	1/2" x 162"	**Premium Belt** – Mower Deck Drive Fits 50" cut mowers 13**9**P*** (2010) & Craftsman model 247.289810	1	
15-132	954-04252 754-04252	1/2" x 84-3/16"	**Premium Belt** – Traction Drive For many lawn tractors (2010–2013)	1	
15-133	954-04259A 754-04259 754-04259A	3/8" x 33-3/4"	**Premium Belt** – Traction Drive For many self-propelled mowers (2011–2013)	1	
15-100	954-04265	5/8" x 34"	**Premium Belt** – Upper Variable Speed For some lawn tractors (2010–2012)	1	
Murray					
15-645	3887	1/2" X 31"	**Premium Belt**	7	
15-630	24304	1/2" X 83-1/8"	**Premium Belt**	1	
15-646	581264 581264MA	1/2" X 35-1/4"	**Premium Belt** – Wheel Drive For 2-stage snow throwers (2000–2001)	7	
115-209	585416 585416MA	1/2" x 38-3/8"	**Belt** – Standard Belt for Auger Drive Fits many 2-stage snow throwers (2004–2011)		
15-647	585436 585436MA	1/2" X 37-13/16"	**Premium Belt**	7	
15-648	760928 760928MA	3/8" X 35-1/16"	**Premium Belt** – Auger Drive For single stage snow throwers (2000–2003)	7	
75-367	37X3 0037X3 0037X3MA	1/2" x 46-1/4"	**Premium Belt** – Drive For side discharge models with 36" cut decks (1976–1980 & 1983–1988)	1	
75-111	37X11 21615	1/2" x 95-1/8"	**Premium Belt** – Transmission Drive For 36", 38", & 42" riding mowers NOT used on uniframe models	1	
75-112	21649 37X12 037X12 037X12MA	1/2" x 55-1/8"	**Premium Belt** – Blade For 25", 30", & 36" cut	1	
75-040	23748 37X21 37X40 037X40 037X40MA	1/2" x 62-1/4"	**Premium Belt** – Blade For 39", 40", & 42" cut	2	

B

Murray

OREGON	Replaces	Size	Description	Type	Product Code
75-022	23749 37X22 037X22 037X22MA	1/2" x 99-5/16"	**Premium Belt** – Cross Drive For all 38", 39", & 42" decks	2	
75-026	37X26 037X26 037X26MA	1/2" x 88-1/4"	**Premium Belt** – Transmission For 42" lawn tractor	1	
15-634	37x35	1/2" X 90-9/16"	**Premium Belt**	1	
75-038	37X38 037X38 037X38MA	1/2" x 40-1/2"	**Premium Belt** – Transmission For 25" & 30" riding mower	1	
75-005	37X43 037X43 037X43MA	1/2" x 83-1/8"	**Premium Belt** For 36" deck, rear & side discharge uniframe	1	
75-045	37X45 037X45 037X45MA	1/2" x 90-1/8"	**Premium Belt** – Motion Drive For uniframe units with 5-speed transaxle	1	
75-057	37X57 037X57 037X57MA MU37X57	1/2" x 53-1/4"	**Premium Belt** – Blade Drive For 30" rear engine rider	1	
75-061	37X61 037X61 037X61MA 710531	1/2" x 95"	**Premium Belt** – Drive For 30", 38", & 40" gear & 50" gear drive on LT pan frame tractors & 30", 40", 42", 46", & 48" decks with Peerless Hydro Drive	1	
75-041	37x62 037X62 037X62MA	1/2" x 86-3/8"	**Premium Belt** – Deck For 40" cut LT tractors, models with side discharge (1989 & newer)	1	
175-041			**Belt** – Standard Version of 75-041		
75-063	37X63 037X63 037X63MA	1/2" x 83-1/2"	**Premium Belt** – Blade Drive For 38" deck (1989 & newer)	1	
75-122	37X64 037X64 037X64MA	1/4" x 36-5/8"	**Premium Belt** – Drive For 21" rear drive self-propelled 3-n-1 & 2-n-1 mowers (1990 & newer)	2	
75-065	37X65 037X65 037X65MA MU37X65	1/2" x 30-1/4"	**Premium Belt** – Engine to Transaxle For 25" & 30" rear engine rider & LT tractors (1990 & newer)	1	
75-094	37X66 037X66 037X66MA 710216	1/2" x 47-5/16"	**Premium Belt** – Cross Drive For 40" & 46" decks on GT & LTX trailers, LT & rail frame tractors (1990 & newer)	2	

B

Belts

Murray

OREGON	Replaces	Size	Description	Type	Product Code
75-103	37X68 037X68 037X68MA	1/2" x 101-5/16"	**Premium Belt** – Drive For LT frame & LTX tractors, motion drive belt, gear drive (1990–1998), 5.0.6 tractors with 42" & 46" decks, & GT Frame with 42" & 46" decks	1	
75-151	37x69 037X69 037X69MA	1/2" x 80-3/4"	**Premium Belt** – Blade Drive For Murray & Ultra lawn tractors, 18 HP, 4630 series with 46" cut, LT & GT tractors (1990–1998), & X tractors with 46" deck	1	
75-001	37X70 037X70 037X70MA	1/2" x 76-3/4"	**Premium Belt** – Primary Drive For 46" deck on LT (1990–1995), 14 HP & 18 HP lawn tractors	1	
15-638	037X73MA 037X73	3/8" X 44"	**Premium Belt** – Wheel Drive For rear wheel drive self-propelled mowers with Tecumseh engines (1994–1997)	7	
75-152	37X75	1/2" x 91"	**Premium Belt** – Blade Belt Fits 42" cut, 12–18 HP models (1990–1994)	1	
15-641	037X81MA 37X81 37X81MA	1/2" X 88-5/8"	**Premium Belt** – Hydro Transmission Drive Fits 46250, 46254, 46258 lawn tractors (1996)	1	
15-642	037X83MA 37X83	1/2" X 79-3/8"	**Premium Belt** – Hydro Transmission Drive Fits 42910 lawn tractors (1996)	1	
15-643	37X90	1/4" X 35-7/16"	**Premium Belt** – Wheel Drive Fits 21975X92C rear wheel drive self-propelled mowers	7	
15-644	037X97MA 37X97	1/2" X 95"	**Premium Belt** – Hydro Transmission Drive Fits 461603, 41604, & 521613 garden tractors (2000–2005)	1	
75-042	37X80 037X80 037X80MA	1/2" x 86-1/8"	**Premium Belt** – Motion Driver For Dana & Eaton hydro units on LT series with 40", 42", & 46" decks, & 12.5 HP, 14 HP, & 18 HP LT hydro (1994 & newer)	1	
75-266	37X86 037X86 037X86MA 710193	1/2" x 84-11/16"	**Premium Belt** – Blade Drive For 38" cut, LT tractor	1	
75-209	37X87 037X87 037X87MA MU037X87 MU037X87MA 710341	1/2" x 97-1/16"	**Premium Belt** For LT gear drive & 5.0.6 drive on 30", 38", 40", 42", & 46" decks & hydro belt on 42" LT with a Dana or Eaton hydro	1	
75-135	37X88 037X88 037X88MA 710213	1/2" x 89-5/8"	**Premium Belt** – Blade Drive Fits 42" hydro tractor	1	
175-135			**Belt** – Standard Version of 75-135		
75-129	37X89 037X89 037X89MA 710217	1/2" x 87-3/8"	**Premium Belt** – Blade Drive For 46" deck on LT tractor	1	

OREGON	Replaces	Size	Description	Type	Product Code
Murray					
75-210	37X92 037X92 037X92MA	1/2" x 53-1/8"	**Premium Belt** – Secondary Mower Deck For 48", 50", & 52" decks on LT rail frame tractors & 52" GT tractors	2	
75-267	37X93 037X93 037X93MA	5/8" x 109-5/16	**Premium Belt** – Blade Drive For 48", 50", & 52" decks	1	
75-964	37X96 037X96 037X96MA	1/2" x 88-5/8"	**Premium Belt** – Blade Drive For 46" deck on GT rail frame series	1	
75-368	37X98 37X100MA	3/4" x 34-9/16"	**Premium Belt** – Torque Converter For go-karts	6	
75-204	37X100	3/8" x 34-1/4"	**Premium Belt** – Drive For 22" front drive self-propelled 3-in-1 mower with Briggs & Stratton or Tecumseh Magnum Torque engine with double idler (1999 & newer)	1	
75-996	37X101 37X101MA	3/8" x 34-1/4"	**Premium Belt** – Drive For 22" side discharge, front wheel drive self-propelled mower with Tecumseh engine	2	
75-679	37X110 37X110MA MU37X110 MU37X110MA	1/2" x 43-7/8"	**Premium Belt** – Motion Drive For rear engine riders with 30" cut deck	1	
Noma (also refer to Dynamark)					
15-654	33125	1/2" X 87-7/8"	**Premium Belt**	7	
15-655	3526	1/2" X 30-1/4"	**Premium Belt**	7	
15-657	45186	1/2" X 62-7/8"	**Premium Belt**	7	
15-659	49878	5/8" X 83-7/16"	**Premium Belt**	7	
15-660	57556	1/2" X 89-1/2"	**Premium Belt**	1	
15-649	300575	1/2" X 34-1/16"	**Premium Belt**	1	
75-136	300680P	5/8" x 77-3/16"	**Premium Belt** – Deck Drive For 38", 39", & 45" deck, fits Eagle Star	2	
75-137	300842	5/8" x 78-3/16"	**Premium Belt** – Blade Fits 39" mower series 3912–1500, 1600, 2200, & 2201	2	
75-214	301935P	1/2" x 108-1/2"	**Premium Belt** – Blade For 42" deck	2	
15-650	302289	21/32" X 74-1/16"	**Premium Belt**	7	
15-651	303241	1/2" X 90"	**Premium Belt**	1	

Belts

OREGON	Replaces	Size	Description	Type	Product Code
Noma (also refer to Dynamark)					
15-652	305148	21/32" X 83-5/16"	**Premium Belt**	1	
15-653	308701	21/32" X 80-1/8"	**Premium Belt**	7	
75-138	314108P	5/8" x 86-1/4"	**Premium Belt** – Blade Fits 43" cut models D4314-060, D4315-000, & D4318-060	1	
75-934	314120	1/2" x 87-1/4"	**Premium Belt**	1	
75-289	319596	6-rib x 35-3/16"	**Premium Belt** – Auger For all 3 & 4.5 HP snow throwers, 6V poly rib	3	
75-977	321205	5/8" x 97-1/2".	**Premium Belt** – Drive	1	
75-168	43066	5/8" x 71-1/4"	**Premium Belt** For 36" cut, side discharge	1	
75-179	48044	5/8" x 82-1/8"	**Premium Belt** – Blade Drive For 36" cut, rear discharge	2	
75-142	57214P	1/2" x 85-1/4"	**Premium Belt** – Transmission For 38", 39", & 45" mowers	1	
75-143	58170	5/8" x 75-5/16"	**Premium Belt** For 36" & 45" side discharge decks	1	
Partner					
15-661	506070504	3/8" X 36-7/16"	**Premium Belt** Fits K950 (16")	7	
15-662	506070507	3/8" X 39-13/16"	**Premium Belt** Fits K1250	7	
75-711	506 03 30-31	1/4" x 31-5/8"	**Premium Belt** – Cogged V Fits K650 Active, K650 Active II, & K700 Active II cut-off saws	6	
75-724	506 07 05-03	3/8" x 34-5/8"	**Premium Belt** – Cogged V Fits K950 cut-off saws with 12" & 14" blades	6	
75-713	506 07 05-06	3/8" x 31-5/16"	**Premium Belt** – Cogged V Fits K650 Active III & K7000 Active III cut-off saws	6	
75-712	506 29 67-02	6-rib x 32-1/2"	**Premium Belt** – Multi-Ribbed Fits K750 cut-off saws	3	
Polaris ATV					
15-663	3211077	1-3/16" X 41-3/8"	**Premium Belt** – Variable Speed	7	

B

OREGON	Replaces	Size	Description	Type	Product Code
Poulan Pro					
15-664	PP12001 531307215	1/2" X 88-1/4"	**Premium Belt**	1	
15-665	PP12002 532138255	1/2" X 95-3/8"	**Premium Belt**	1	
15-667	PP12012 531307218	1/2" X 95"	**Premium Belt**	1	
15-668	PP13006 531307219	3/8" X 31-15/16"	**Premium Belt**	7	
15-669	PP13007 575936701	21/32" X 90-1/16"	**Premium Belt**	1	
15-670	PP13008 575936801	21/32" X 89-1/16"	**Premium Belt**	1	
15-672	PP13010 575936901	1/2" X 83"	**Premium Belt**	1	
15-673	PP13011 575937001	21/32" X 143-3/8"	**Premium Belt**	2	
Power Trim					
75-010	339	1/2" x 28-1/4"	**Premium Belt** For edgers	1	
15-001		1/2" x 27-5/8"	**Premium Belt** For wheeled edgers	2	
15-002	339-1	1/2" x 28-3/8"	**Premium Belt** – Cogged For wheeled edgers	6	
Roper					
15-688	102655X	1/2" X 38"	**Premium Belt** – Impeller Drive For 2-stage snow throwers	2	
15-691	106863X 108597X	1/2" X 92"	**Premium Belt** – Deck Drive For garden tractors with 44" decks (1999 & earlier)	2	
15-693	111924X 532111924	3/8" X 31-3/4"	**Premium Belt** – Ground Drive For 20" self-propelled mowers (1999 & earlier)	7	
15-695	124293X 532124293X	1/2" X 79-9/16"	**Premium Belt** – Deck Drive For lawn tractors with 36" decks (1999 & earlier)	1	
15-700	141416 532141416 917532141416	1/2" X 83-3/4"	**Premium Belt** – Ground Drive For lawn tractors (1995–1999)	1	
15-704	165555 53216555	1/2" X 108-1/16"	**Premium Belt** – Deck DriveAA For rear discharge 36" lawn tractors (1999 & earlier)	4	

Belts

OREGON	Replaces	Size	Description	Type	Product Code
Roper					
15-705	165631 532165631 917532165631	1/2" X 111-1/16"	**Premium Belt**	1	
15-708	169178 532169178	1/2" X 114-9/16"	**Premium Belt** – Deck DriveAA For rear discharge 42" lawn tractors (1999 & earlier)	4	
15-711	170140 532170140 917532170140	1/2" X 112-11/16"	**Premium Belt** – Ground Drive For rear discharge lawn tractors (2006–2012)	1	
15-712	179092 532179092	1/2" X 34-1/2"	**Premium Belt** – Ground Drive For 2-stage snow throwers (2002–2004)	7	
15-715	917532062828 62828	1/2" X 69"	**Premium Belt** – Deck Drive For lawn tractors with 36" decks (1999 & earlier)	1	
15-716	74977	3/8" X 35-3/4"	**Premium Belt**	2	
15-717	850053 532850053	3/8" X 38-5/16"	**Premium Belt** – Ground Drive For 20" self-propelled mower (1999 & earlier)	7	
15-718	88074	3/8" X 39-1/4"	**Premium Belt**	2	
15-719	9180R	1/2" X 41"	**Premium Belt**	2	
Scag					
75-036	A48083	5/8" x 88-7/8"	**Premium Belt** – Engine to Blade For 61" cut on models with 18 HP Briggs & Stratton	2	
15-674	48084	21/32" X 135-7/8"	**Premium Belt** – Spindle Drive	4	
75-154	48087	5/8" x 53-3/8"	**Premium Belt** – Blade to Blade For SW/SLM48	2	
75-155	48088	5/8" x 103-3/8"	**Premium Belt** – Engine to Blade For SLM48	1	
75-055	48089	5/8" x 89-1/4"	**Premium Belt** – Deck Drive For 48" mid-sized mowers	2	
75-260	48202	1-1/8"(2V) x 51-1/4"	**Premium Belt** – Wheel Drive	5	
75-043	48203	1/2" x 40-1/4"	**Premium Belt** – Transmission For all gearbox units	1	
75-054	48204	5/8" x 82-5/16"	**Premium Belt** – Blade to Blade For 36" walk-behind	1	
15-680	48207	21/32" X 86-1/2"	**Premium Belt** For mowers with SM-61 decks	1	
75-058	A48286	5/8" x 93-1/4"	**Premium Belt** – Deck Drive For 52" cut	2	

Scag

OREGON	Replaces	Size	Description	Type	Product Code
75-047	48265	5/8" x 63-1/8"	**Premium Belt** – Right Blade Drive For 61" cut	1	
75-048	48285	5/8" x 56-1/8"	**Premium Belt** – Right Blade Drive For 52" cut	2	
15-682	48553	1/2" X 50-3/8"	**Premium Belt** – Pump Drive	7	
75-052	48587	1/2" x 57-1/4"	**Premium Belt** – Hydro Pump Drive	1	
15-683	48607	1/2" X 134-3/8"	**Premium Belt** – Deck Drive Fits STG-18KH & STHN-20HK models with SM-61 deck	2	
75-904	48799	5/8" x 114-13/16"	**Premium Belt** – Blade Drive	2	
15-684	48854	1/2" X 42-9/16"	**Premium Belt** – Pump Drive Fits SM & STHM models	7	
75-044	48912	5/8" x 117-5/8"	**Premium Belt** – Engine to Blade Fits 61" deck with 20 & 22 HP Kohler engines, models STHM20 & STHM22	1	
75-370	48996	5/8" x 135-3/8"	**Premium Belt** – Blade Drive For 61" ZTR, wide area walk-behind mowers	2	
15-677	481498	1/2" X 41-1/2"	**Premium Belt** – LH Transmission Drive Fits STR-20CH & STR-22CH	7	
15-678	481499	1/2" X 33-7/8"	**Premium Belt** – RH Transmission Drive Fits STR-20CH & STR-22CH	7	
15-679	481980	21/32" X 162-3/8"	**Premium Belt** – Deck Drive Fits Turf Tiger & Sabre Tooth Tiger models with 72" decks	2	
15-681	482137	21/32" X 117-1/8"	**Premium Belt** – Deck Drive Fits Tiger Cub models with 48" decks	1	
75-715	481749	1/2" x 59-3/8"	**Premium Belt** – Pump Drive For Turf Tigers	1	
75-215	481460	5/8" x 43-1/4"	**Premium Belt** – Deck Drive	6	
75-268	481461	1/2" x 61-3/8"	**Premium Belt** – Hydro Pump Drive For Turf Tiger	1	
75-270	481557	5/8" x 123-5/16"	**Premium Belt** – Blade to Blade For 52" Turf Tiger	1	
75-216	481558	5/8" x 140-1/8"	**Premium Belt** – Deck Drive	1	
75-625	482090	5/8" x 106-3/4"	**Premium Belt** – Deck Drive (wrapped) Fits Tiger Cub 40	1	
75-681	482281	5/8" x 120-1/8"	**Premium Belt** – Deck For Turf Tiger with 52" deck	1	
75-682	482529	5/8" x 147-7/8"	**Premium Belt** – Deck For Tiger Cub with 48" deck	1	

Belts

OREGON	Replaces	Size	Description	Type	Product Code
Scag					
75-629	482530	5/8" x 155"	**Premium Belt** – Deck (wrapped) Fits Wildcat 52A	1	
75-631	482652	5/8" x 175-3/4"	**Premium Belt** – Deck (wrapped) Fits Wildcat 61A	1	
75-632	482716	1/2" x 61-15/16"	**Premium Belt** – Hydraulic Fits Wildcat 61A, raw edge	1	
15-046	482876	5/8" x 44"	**Premium Belt** – Deck For Turf Tiger	6	
75-634	483001	5/8" x 132-1/2"	**Premium Belt** – Deck (wrapped) Fits Z Cat 36A	1	
75-635	483002	5/8" x 149-3/8"	**Premium Belt** – Deck (wrapped) Fits Z Cat 42A	1	
75-637	483157	5/8" x 65-3/16"	**Premium Belt** – Deck (cogged) Fits Wildcat 61A, Wildcat 61V, & Tiger Cub 61V, raw edge	6	
15-045	483166 483086	5/8" x 81-1/2"	**Premium Belt** – Pump Drive For Turf Tiger	6	
75-641	483172	5/8" x 65-7/8"	**Premium Belt** – Hydraulic (cogged) Fits Wildcat 52A, Wildcat 61A, Wildcat 52V, Wildcat 61V, Tiger Cub 48V, Tiger Cub 52V, & Tiger Cub 61V, raw edge	6	
75-642	483239	5/8" x 50-1/4"	**Premium Belt** – Deck (cogged) Fits Tiger Cub 48V, raw edge	6	
75-644	483241	5/8" x 117-1/2"	**Premium Belt** – Deck Drive (wrapped) Fits Tiger Cub 48V	1	
75-645	483242	5/8" x 125-1/2"	**Premium Belt** – Deck (wrapped) Fits Wildcat 52V, Wildcat 52A, & Tiger Cub 52V	1	
75-646	483243	5/8" x 135-3/4"	**Premium Belt** – Deck Drive (wrapped) Fits Wildcat 61A, Wildcat 61V, & Tiger Cub 61V	1	
75-648	483325	5/8"x 141"	**Premium Belt** – Deck (wrapped) Fits Freedom Z 48	1	
75-649	483326	5/8" x 148-5/8"	**Premium Belt** – Deck (wrapped) Fits Freedom Z 52	1	
15-134	483741	5/8" x 137"	**Premium Belt** – Deck Drive Fits some 61V Cheetah & Turf Tiger decks	1	
15-135	484088	5/8" x 152"	**Premium Belt** – Deck Drive Fits some 72V Cheetah & Turf Tiger decks	1	
15-136	484159	5/8" x 77"	**Premium Belt** – RH Deck Drive Fits some 61V & 72V Cheetah & Turf Tiger decks	6	

OREGON	Replaces	Size	Description	Type	Product Code
Scotts					
15-685	710532	1/2" X 53"	**Premium Belt**	2	
15-686	710533	21/32" X 109-3/8"	**Premium Belt**	1	
Sears / Craftsman					
15-688	102655X	1/2" X 38"	**Premium Belt** – Impeller Drive For 2-stage snow throwers	2	
15-691	106863X 108597X	1/2" X 92"	**Premium Belt** – Deck Drive For garden tractors with 44" decks (1999 & earlier)	2	
15-693	111924X 532111924	3/8" X 31-3/4"	**Premium Belt** – Ground Drive For 20" self-propelled mowers (1999 & earlier)	7	
15-695	124293X 532124293X	1/2" X 79-9/16"	**Premium Belt** – Deck Drive For lawn tractors with 36" decks (1999 & earlier)	1	
15-700	141416 532141416 917532141416	1/2" X 83-3/4"	**Premium Belt** – Ground Drive For lawn tractors (1995–1999)	1	
15-704	165555 53216555	1/2" X 108-1/16"	**Premium Belt** – Deck DriveAA For rear discharge 36" lawn tractors (1999 & earlier)	4	
15-705	165631 532165631 917532165631	1/2" X 111-1/16"	**Premium Belt** – Transmission Gear For lawn tractors (1999 & earlier)	1	
15-708	169178 532169178	1/2" X 114-9/16"	**Premium Belt** – Deck DriveAA For rear discharge 42" lawn tractors (1999 & earlier)	4	
15-711	170140 532170140 917532170140	1/2" X 112-11/16"	**Premium Belt** – Ground Drive For rear discharge lawn tractors (2006–2012)	1	
15-712	179092 532179092	1/2" X 34-1/2"	**Premium Belt** – Ground Drive For 2-stage snow throwers (2002–2004)	7	
15-715	917532062828 62828	1/2" X 69"	**Premium Belt** – Deck Drive For lawn tractors with 36" decks (1999 & earlier)	1	
15-716	74977	3/8" X 35-3/4"	**Premium Belt**	2	
15-717	850053 532850053	3/8" X 38-5/16"	**Premium Belt** – Ground Drive For 20" self-propelled mower (1999 & earlier)	7	
15-718	88074	3/8" X 39-1/4"	**Premium Belt**	2	
15-719	9180R	1/2" X 41"	**Premium Belt**	2	
15-052	954-04201A	3/8" x 36"	**Premium Belt** – Snow Thrower Wheel Drive Fits models 247.88791, 247.88830, & 247.888301 (2009–2011)	1	

Belts

OREGON	Replaces	Size	Description	Type	Product Code
Simplicity					
15-724	1657044 71657044 1657044-2 1657044SM	1/2" X 93"	**Premium Belt** – Spindle Drive For tractors with 48" decks	2	
15-729	1670835 71670835 1670835SM	1/2" X 78-1/2"	**Premium Belt** – Pump Drive Fits tractor models 4211H, 4212H, 611H, & 612H	2	
15-731	1665638 1703466 1665638SM 1703466SM	1/2" X 126-1/16"	**Premium Belt** – Deck Drive For 48" decks with shallow-groove pulley	2	
15-732	1703836	1/2" X 91-1/16"	**Premium Belt** – Spindle Drive For 50" decks	2	
15-733	1666698 1716854 71666698 1666698SM 1716854SM	1/2" X 90-9/16"	**Premium Belt** – Transmission Drive For tractors with gear transaxle	1	
15-734	1718017 1718017SM	1/2" X 114-1/4"	**Premium Belt** – Spindle Drive For tractors with 44" decks	1	
15-735	163011 1722039SM	1/2" X 71-5/16"	**Premium Belt** – Spindle Drive For tractors with 54" decks	1	
75-371	1668066 1668066SM	1/2" x 119-3/4"	**Premium Belt** – Blade Fits 5000 & 6000 series tractors with 42" deck	2	
75-372	1713515 1713515SM	1/2" x 78-1/8"	**Premium Belt** – Engine to Deck Fits 7100 series & Allis Chalmers 900 series	1	
75-218	1713549 1713549SM	1/2" x 70-1/8"	**Premium Belt** – Drive For Homesteader 6 HP model (1971–1974), 30" Yoeman tiller, 36" rotary mower arbor drive, & Broadmoor 5000 & 3008 series	1	
Sitrex					
15-737	SM31150	21/32" X 70-13/16"	**Premium Belt**	2	
Snapper					
15-739	14398 7014398 7014398YP	1/2" X 134-3/8"	**Premium Belt** – Deck Drive Fits models LT11000 & LT11001 with 41" decks	2	
15-740	14799 7014799 7014799YP	1/2" X 103"	**Premium Belt** – Deck Drive For mowers with 33", 38", 41", & 42" decks	2	

B

Snapper

OREGON	Replaces	Size	Description	Type	Product Code
15-741	14800 1-4800 7014800 7014800YP	1/2" X 138-9/16"	**Premium Belt** – Deck Drive For garden tractor with 41" & 42" decks	2	
15-742	17053 7017053 7017053YP	1-1/4" X 54-1/2"	**Premium Belt**	5	
15-744	23416 7023416 7023416YP	3/8" X 30-3/4"	**Premium Belt**	7	
15-746	24497 2-4497 1-4525 7024497 7024497YP	1/2" X 107-9/16"	**Premium Belt**	4	
15-748	24618 7024618 7024618YP	3/8" X 34-1/8"	**Premium Belt**	7	
15-749	26305 7026305 7026305YP	1/2" X 53-3/8"	**Premium Belt**	1	
15-750	27346 7027346 7027346YP	21/32" X 92-13/16"	**Premium Belt**	2	
15-751	27347 7027347 7027347YP	21/32" X 55-13/16"	**Premium Belt**	2	
15-753	28051 7028051 7028334SM	1/2" X 94-5/16"	**Premium Belt**	1	
15-756	29101 7013938 7029101 7029101YP	3/8" X 36-3/16"	**Premium Belt**	7	
15-760	29641 7025042 7029641 7029641YP	1/2" X 97-11/16"	**Premium Belt**	1	
15-761	29907 7022541 7024511 7029907 7029907YP	21/32" X 91-5/16"	**Premium Belt**	1	
15-762	35710 7029255 7035710 7035710YP	21/32" X 85-1/16"	**Premium Belt**	2	

Belts

Snapper

OREGON	Replaces	Size	Description	Type	Product Code
15-763	36585 7036585 7075235YP	1/2" X 94-9/16"	**Premium Belt**	1	
15-764	42735 7029269 7042735 7042735YP	21/32" X 74-1/16"	**Premium Belt**	2	
15-765	42813 7042813 7042813YP	21/32" X 68"	**Premium Belt**	2	
15-766	43844 7043844 7043844YP	1/2" X 74-9/16"	**Premium Belt**	4	
15-767	44637 7028619 7044637 7044637YP	21/32" X 75-5/16"	**Premium Belt**	1	
15-768	5023256 5100881 5023256SM	1/2" X 151-5/16"	**Premium Belt**	1	
15-769	62465 7062465 7062465YP	1/2" X 82"	**Premium Belt**	1	
15-771	79181 7079181 7079181YP	1/2" X 52-13/16"	**Premium Belt**	4	
15-773	79776 7079776 7079776YP	1/2" X 72-51/16"	**Premium Belt**	2	
15-774	79779 7079779 7079779YP	21/32" X 84-15/16"	**Premium Belt**	2	
15-776	79781 7079781 7079781YP	21/32" X 84-5/16"	**Premium Belt**	2	
75-068	1-0749 10749 7010749	1/2" x 71-7/16"	**Premium Belt** For most 25", 26", 28", & 30" cut decks, rear engine riders	4	
175-068			**Belt** – Standard Version of 75-068		
75-059	1-1117 11117 7011117	6-rib x 20-3/8"	**Premium Belt** – Self-propelled Fits V21 series cast decks - 6-rib	3	

B

Snapper

OREGON	Replaces	Size	Description	Type	Product Code
75-353	1-2353 12353 7012353	3/8" x 25-1/2"	**Premium Belt** – Engine Drive Fits 21PC commercial series, steel deck series 6, 7, 8, 9, & 0, & commercial series 0, 7, & 9	6	
75-354	1-2354 12354 7012354	4-rib x 22-1/2"	**Premium Belt** – Transmission Fits 21P steel deck & V-21 self-propelled mowers	3	
75-508	1-2508 12508 7012508 7011887	3/8" x 25"	**Premium Belt** – Engine Drive Fits all 21P standard mowers & most V21 series with 3-1/2 & 4 HP engines	1	
75-105	1-4525 14525 7014525 7024497	1/2" x 108-1/4"	**Premium Belt** For 41" deck on rear rider & 48" deck on tractors	4	
175-105			**Belt** – Standard Version of 75-105		
75-219	2-4891 24891 7024891	1-1/8" x 51-3/4"	**Premium Belt** – Transmission to Wheel Fits Pro 7 series 36", 48", & 52" decks	5	
75-073	1-8236 18236 128598 22252 7018236 7022252	1/2" x 74-1/8"	**Premium Belt** For 33" cut, new style 30" riders	4	
175-073			**Belt** – Standard Version of 75-073		
75-036	7-6496 76496 7076496	5/8" x 88-7/8"	**Premium Belt** – Engine to Blade For 61" cut deck model with 18 HP Briggs & Stratton engine	2	
75-221	7-6497 76497 7076497	5/8" x 44-5/16"	**Premium Belt** – Wheel (cogged) For all early models	6	
75-058	7-6677 76677 7076677	5/8" x 93-1/4"	**Premium Belt** For 48" blade drive	2	
75-240	7-6680 76680 7076680	5/8" x 35-1/4"	**Premium Belt** – Transmission For 48" deck, series 0 & 1	2	
75-727	2-9604 29604 7029604	3/8" x 33"	**Premium Belt** – V Fits 3200 series snow throwers	1	

B

Belts

OREGON	Replaces	Size	Description	Type	Product Code
Stihl					
15-780	94900007850	3/8" X 34-3/16"	**Premium Belt**	7	
15-781	94900007851	3/8" X 34-1/2"	**Premium Belt**	7	
15-782	94900007891	3/8" X 36-7/16"	**Premium Belt**	7	
15-783	94900007900A	7/16" X 32-3/8"	**Premium Belt**	3	
15-784	94900007901A	7/16" X 29-3/8"	**Premium Belt**	3	
15-785	94900007915	9/16" X 39-5/8"	**Premium Belt**	3	
15-786	94900007920	9/16" X 37"	**Premium Belt**	3	
75-272	9490-000-7850	3/8" x 33-3/4"	**Premium Belt** – Drive Fits TS350 cut off saw	6	
75-273	9490-000-7851	3/8" x 34-7/16"	**Premium Belt** – Drive Fits TS400 cut off saw	6	
Toro					
15-788	102742 94-2501	1/2" X 103"	**Premium Belt** – Deck Drive Fits 260, XT, 5xi series with 52" decks Fits 300 series GT classic tractors with 42" & 48" decks	2	
15-789	104-6397	1/2" X 107-1/2"	**Premium Belt** – Spindle Drive Fits mid-size ProLine mowers with 52" decks (2001–2007)	4	
15-790	104-6398	21/32" X 75-3/16"	**Premium Belt** – PTO to Deck Drive Fits mid-size ProLine mowers with 52" decks (2001)	1	
15-791	104-8152	1-3/16" X 49"	**Premium Belt** – Wheel Drive Fits mid-size ProLine mowers (2001)	5	
15-792	106125	1/2" X 88-5/8"	**Premium Belt** – Spindle Drive For 42" rear discharge decks (1980–2014)	2	
15-794	110-6774	1/2" X 62-1/8"	**Premium Belt** – Hydro Transmission Drive Fits TimeCutter Z4200, Z4202, Z4235, Z5000, Z5020, Z5030, Z5035, Z5040, & Z5060 (2007–2010)	7	
15-795	110-6892	1/2" X 140-1/2"	**Premium Belt** – Deck Drive Fits TimeCutter Z5000, Z5020, Z5030, Z5035, Z5040, & Z5060 with 50" decks (2007–2010)	2	
15-797	114202 114202-09	1/2" X 125"	**Premium Belt** – PTO to Deck Drive Fits 50" 78445 & 60" 48475 side discharge decks (1993–1995)	7	
15-798	1594	1/2" X 107-1/16"	**Premium Belt** – Spindle Drive For 42" side discharge decks (1970–1990)	2	
15-799	21-0890	21/32" X 71-13/16"	**Premium Belt** – Spindle Drive For 72" 30721 side discharge decks (1970–1987)	2	
15-800	44-8990	3/8" X 33-5/8"	**Premium Belt** – PTO Drive Fits Groundmaster 200 series (1983–1992)	5	

Toro

OREGON	Replaces	Size	Description	Type	Product Code
15-801	47-1410	1/2" X 47-7/8"	**Premium Belt** – Transmission Drive For rear engine riders (1983–1992)	1	
15-802	51-4291	1-3/16" X 45-7/8"	**Premium Belt** – Wheel Drive Fits mid-size ProLine gear mowersbuilt 1998-2008	5	
15-803	106-4383 53-9660 23-1820	1-3/16" X 42-3/8"	**Premium Belt** – PTO Drive Fits 72" 30721 side discharge decks (1985–1988)	5	
15-804	55-7660	21/32" X 71-5/16"	**Premium Belt** – PTO Drive Fits mid-size ProLine gear mowersbuilt 1988-1999	1	
15-805	57-0240	21/32" X 147-3/8"	**Premium Belt** – Spindle Drive Fits GM 117/120/200/220, ProLine 118, Z Master Z255, Z256, Z259, Z286E, Z287L, & Z288E with 72" decks (1987–2003)	4	
15-807	98-0710 67-1390	1/2" X 51"	**Premium Belt** – PTO Drive For 8 HP rear engine riders with 25" decks (1989–2002)	7	
15-809	93-8457 69-6220	21/32" X 136-9/16"	**Premium Belt**	4	
15-810	74-1330	21/32" X 82-5/16"	**Premium Belt** – PTO Drive Fits 62" 30162 side discharge decks (1990–1999)	1	
15-812	82-2390	1/2" X 126-9/16"	**Premium Belt** – Spindle Drive Fits 30148 48" recycler mowers (1991–1992)	4	
15-813	82-4110	1/2" X 47"	**Premium Belt** – Pump Drive Fits mid-size ProLine Hydro mowersbuilt 1991-2007	2	
15-814	82-6420	21/32" X 84-13/16"	**Premium Belt** – PTO to Deck Drive Fits 30148 48" recycler mowers (1991–1992)	1	
15-815	8411	1/2" X 77-1/16"	**Premium Belt** – Spindle Drive For 36" side discharge decks (1968–1991)	7	
15-820	92-5588	1/2" X 138-1/2"	**Premium Belt** – Spindle Drive Fits 30569, 62" Guardian Recycler mower, Groundsmaster 200 series (2003–2004)	4	
15-821	93-3884	21/32" X 130-1/8"	**Premium Belt** – Spindle Drive Fits 44" side discharge mower, XL series lawn tractors (1995–2003)	1	
15-824	98-3764	21/32" X 144-3/16"	**Premium Belt** – PTO to Deck Drive Fits 74203, Z255 Z Master, with 62" SFS side discharge mower (1999)	2	
15-825	98-3780	21/32" X 141-7/8"	**Premium Belt** – Spindle Drive Fits 74501, Z16-44 & 74601, Z17-44 TimeCutter Z riding mowers (2001), & 100 series Z Master with 44" decks (1999–2006)	2	
15-826	99-3904	21/32" X 158-9/16"	**Premium Belt** – Spindle Drive Fits TimeCutter ZX riding mower with 52" decks (2001–2003) Fits 100 series Z Master with 52" decks (1999–2004)	1	

Belts

Toro

OREGON	Replaces	Size	Description	Type	Product Code
15-827	99-4627	21/32" X 147-9/16"	**Premium Belt** – PTO to Deck Drive Fits 200 series Z Master with 72" side discharge decks (1999–2003)	1	
15-828	99-4647	21/32" X 142-3/8"	**Premium Belt** – PTO to Deck Drive Fits 200 series Z Master with 62" side discharge decks (1999–2003)	1	
75-075	5-4505 3-7274	3/8" x 31-5/16"	**Premium Belt** Fits all front wheel drive, self-propelled mowers	2	
75-060	25-6430 23-7350	6-rib x 33-1/2"	**Premium Belt** Fits Snowmaster models S200 & S620 – six rib	3	
75-043	17-0850 23-9080 26-9670 26-9670-09 27-0230	1/2" x 40-1/4"	**Premium Belt** – Trans Drive For 36", 44", & 52" commercial	1	
15-051	26-9672	1/2" x 30-9/16"	**Premium Belt** – Snow Thrower Auger Fits models 622, 622E, 622R, 722, & 724 (1993 & newer)	8	
75-165	27-1160 271160-09	1/2 x 104-1/2"	**Premium Belt** – Blade to Blade For 44" & 52" decks	4	
75-980	37-9080	3/8" x 30"	**Premium Belt** Fits models 421 & 521 snow throwers	6	
75-373	44-6260	1/2" x 123-1/32"	**Premium Belt** – Deck For 62" Groundsmaster	4	
75-274	51-3530	1/2" x 51-1/4"	**Premium Belt** – Blade to Blade For 36" deck	1	
75-205	51-4290 51-4290-09	1-1/4"(2V) x 51-1/8"	**Premium Belt** – Drive Wheel For 36", 48", & 52" walk-behind, commercial Proline, 2 groove	5	
75-275	54-2750 54-2750-09	5/8" x 70-1/8"	**Premium Belt** – Engine to Deck Fits 36" & 44" cut deck for Proline 30117, 30136, 30144, 30165, 30170, & 30180	2	
75-066	55-9300	6-rib x 34-7/16"	**Premium Belt** Fits CCR2000 snow thrower (six-rib), Bolens 1737899, & Simplicity 1663885	3	
75-192	71-5381 71-5380	3/8" x 34-3/8"	**Premium Belt** – Drive Fits CCR1000 snow throwers	1	
75-225	75-9010	3/8" x 29-1/4"	**Premium Belt** Fits Powerlite models	8	
75-684	91-2258	3/8" x 35-1/4"	**Premium Belt** – Drive For 22" mowers	1	
75-939	95-6151	5-rib x 34-1/2"	**Premium Belt** – Snow thrower Fits models CCR2400, CCR2450, CCR2500, CCR3000, CCR3600, & CCR3650	3	
75-888	106-7350	5/8" x 264-13/32"	**Premium Belt** – V For mowers	1	

Toro

OREGON	Replaces	Size	Description	Type	Product Code
75-887	105-8783	5/8" x 242-13/32"	**Premium Belt** – V For mowers	1	
15-002	106-2174	1/2" x 28-3/8"	**Premium Belt** – Hydro Transmission For TimeCutter Z models: 14-38Z (2003–2004), 16-42Z (2003–2004), 17-42Z (2003–2004), 18-44Z (2004), Z380 (2005–2007), Z420 (2005–2011), Z420T (2009–2011), Z480 (2005–2006), & Z530 (2006–2007)	6	
15-016	106-7369	5/8''X 176''	**Premium Belt** – Deck Drive For Z Master mowers with 48" & 52" cut, Turbo Force, & 7-gauge side discharge decks	1	
15-137	108-2693	5/8" x 82"	**Premium Belt** – Deck Drive Fits commercial walk-behind mowers with 52" Turbo Force deck (2007–2012)	1	
15-138	108-2694	1/2" x 111-1/2"	**Premium Belt** – Spindle Drive Fits commercial walk-behind mowers with 52" Turbo Force deck (2007–2012)	1	
15-139	108-2715	5/8" x 78-3/16"	**Premium Belt** – Deck Drive Fits commercial walk-behind mowers with 48" Turbo Force deck (2007–2012)	1	
15-140	108-2716	1/2" x 105-1/4"	**Premium Belt** – Spindle Drive Fits commercial walk-behind mowers with 48" Turbo Force deck (2007–2012)	1	
15-141	110-5049	1/2" x 47-3/8"	**Premium Belt** – Pump Drive Fits commercial walk-behind mowers (2007–2012)	1	
115-145	110-6871	1/2" x 112-3/4"	**Standard Belt** – Deck Drive Fits riding mower models RZT420H (2008–2009), TimeCutter Z4200 (2007–2010), TimeCutter Z4220 (2008–2009), TimeCutter Z4235 (2010), & TimeCutter Z4202 (2008–2010)	1	
15-049	114-0454	1/2" x 146-1/4"	**Premium Belt** – Deck For Grand Stand mowers with 52" Turbo Force deck (2009–2011)	1	
15-050	115-7426	5/8" x 183-5/8"	**Premium Belt** – Deck For Z Master G3 mowers with 52" Turbo Force deck (2009–2011)	1	
115-146	115-9613	1/2" X 75-1/2"	**Standard Belt** – Pump Drive Fits Titan ZTR riding mower models ZX5000, ZX5400, ZX6050 (2009–2010), ZX6000 (2009), ZX4800, ZX5450, ZX6030 (2010), ZX5020 (2011), MX4880, MX5480, MX6080, ZX4820, ZX5420, & ZX6020 (2011–2013)	6	
15-142	119-8819	1/2" x 113-1/2"	**Premium Belt** – Deck Drive Fits 42" TimeCutter (2011–2012)	1	
15-143	119-8820	1/2" x 141-1/4"	**Premium Belt** – Deck Drive Fits 50" TimeCutter (2011–2012)	1	
15-144	1-323744	5/8 X 49-3/8	**Premium Belt** – Wheel Drive Fits commercial walk-behind mowers (2002–2012)	6	

Belts

Troy Bilt (also see MTD)

OREGON	Replaces	Size	Description	Type	Product Code
15-829	1185651	1/2" X 114-1/4"	**Premium Belt**	2	
15-833	1744706 GW-1744706 GW-B1744706	1/4" X 33-7/16"	**Premium Belt** – Transmission Drive 11300 4HP-21" Vacu-Cut self-propelled	7	
15-836	1755565 GW-1755565 GW-B1755565	3/8" X 41-7/8"	**Premium Belt** Fits 11300 & 11301 4HP-21" Vacu-Cut self-propelled	7	
15-837	1743875 1755537 1764007 GW-1764007 GW-B1755537	1/2" X 159-3/4"	**Premium Belt** – Deck Drive Fits 30042SR 42" S.D. mower attachment	7	
15-838	1755539 1764009 GW-1764009	21/32" X 155-7/8"	**Premium Belt**	7	
15-839	1830258	21/32" X 79-1/16"	**Premium Belt**	7	
75-685	1128-1	1/2" x 21-3/4"	**Premium Belt** – Tiller For Horse models	1	
75-686	9245	1/2" x 22-1/4"	**Premium Belt** – Drive For Horse models	1	
75-378	1770334	1/2" x 58-3/8"	**Premium Belt** – Blade For 22" wide cut mowers	2	
75-380	1902325	5/8" x 29-3/16"	**Premium Belt** – Drive For Super Tomahawk II chipper shredders	2	
75-278	1909404	1/2" x 24-1/4"	**Premium Belt** – Forward Drive	1	
75-277	T1769767	1/2 x 65-3/8"	**Premium Belt** For 33" wide cut mowers (replaces 75-377)	1	
15-052	954-04201A	3/8" x 36"	**Premium Belt** – Snow Thrower Wheel Drive Fits models Storm 2410, Storm 2620, Storm 2840, Storm 3090, & Storm 3090XP (2009–2011)	1	
15-053	954-04093	3/8" x 35-7/8"	**Premium Belt** – Self-Propel Fits models 12AG836E, 12AG839E 12AV834Q, 12AV835Q, 12AV838Q, & 12AV839Q	2	
15-054	954-04176A	3/8" x 34-1/8"	**Premium Belt** – Self-Propel Fits models 12AI832Q, 12AI836M, 12AI836N, 12AI865Q, 12AI867Q, 12AI839F, 12AI839G, 12AI83K, 12AI869F, 12AI869G, 12AI86K, 12AJ867Q, 12AJ836E, & 12AJ836G	2	

B

OREGON	Replaces	Size	Description	Type	Product Code
Walker					
15-842	6231	3/8" X 35-7/8"	**Premium Belt**	7	
15-843	7230	1-3/16" X 37-15/16"	**Premium Belt**	5	
15-844	7234	3/8" X 28-3/8"	**Premium Belt**	7	
15-845	7235	7/16" X 23-7/16"	**Premium Belt**	7	
115-212	8230	1-3/16" x 41-1/4"	**Belt** – Standard Belt for PTO Fits C & T models	9	
Woods					
15-847	10676	21/32" X 161-7/8"	**Premium Belt** – Drive Fits mid-mount & under-mount Allis-Chalmers B/C/CAL42 Also fits D7221-3 Mow'n Machine	2	
15-848	10859	21/32" X 249-13/16"	**Premium Belt** – Drive ForL306, L59 under-mount & mid-mount	2	
15-849	10864	21/32" X 177-7/8"	**Premium Belt** – Drive For 304K-1 under-mount & mid-mount & L42D10 under-mount & mid-mount	2	
15-850	11466	21/32" X 256-1/2"	**Premium Belt** – Drive For L306, L59, LU306 under-mount & mid-mount	2	
115-217	13425	5/8" x 278-3/4"	**Belt** – Standard Belt for Deck Drive Fits mid-mount mowers LU306ACWD, LU306U, L306AC/WD, L306H274, & L306U		
15-851	13453	21/32" X 266-1/2"	**Premium Belt** – Drive For L306, L59, & LU306 under-mount & mid-mount	2	
15-852	1469	1-3/16" X 136-1/2"	**Premium Belt** – Drive For 42C-1, 42C-2, 42C-3, 42C-4, & 59CF-1 under-mount & mid-mount	2	
15-853	15184	2-3/16" X 116-5/8"	**Premium Belt** – Spindle Drive Fits C114-1 multi-spindle	9	
15-854	15415	21/32" X 199-3/4"	**Premium Belt** – Spindle Drive Fits RM372 rear-mount finish mower (02/04/99)	2	
15-945	16099	1/2" X 138-9/16"	**Premium Belt**	1	
15-856	18186	21/32" X 197-15/16"	**Premium Belt** – Drive For 348K, 348MB, 348MF, 348SB, L306-BMC, L59BMC, L59K18, L59KR17, & L59Y186 under-mount & mid-mount	2	
15-858	18440	21/32" X 218-15/16"	**Premium Belt** – Drive For 59LB, 59LB-1, L5915, & L59F15-1 under-mount & mid-mount	2	
115-214	18879	5/8" x 133-1/2"	**Belt** – Standard Belt for Deck Drive Fits finish mowers PRD7200, RD72, & RD7200		
15-860	18990	1-3/8" X 167-7/8"	**Premium Belt** – Spindle Drive Fits P990 & RM990 rear-mount finish mower	9	
15-861	20644	21/32" X 71-5/16"	**Premium Belt** – Spindle Drive Fits RDC54 & RD60 rear discharge, & RM550 rear-mount decks	2	

Belts

Woods

OREGON	Replaces	Size	Description	Type	Product Code
15-863	21510W	1/2" X 138-3/8"	**Premium Belt** – Spindle Drive Fits SP59-1 rear-mount finish mower	2	
15-864	23033	21/32" X 201-1/2"	**Premium Belt** – Drive Fits 348F12-2, 348H234-1, 348MF2-1, 348MF-2, 348MF4-1, 348SBK-1, 348SBK-2, L306SBL-1, L59K61, L59K72, & L59SBL-1 under-mount & mid-mount	2	
15-865	23560	1/2" X 155-13/16"	**Premium Belt**	2	
15-867	23933	21/32" X 259-7/8"	**Premium Belt** – Drive Fits L306 JD105, L306-H3, L306AC/54, L306B25, L306F172-1, L306F192, L59AC/WD, & L59U under-mount & mid-mount	2	
15-868	23943	21/32" X 271-5/8"	**Premium Belt** – Drive Fits L306AC/WD, L306D10, L306D12, L306D14, L306U, L59D10, & L59D12 under-mount & mid-mount	2	
15-869	23990	21/32" X 234"	**Premium Belt** – Drive Fits L306B27, L306GM4-1, L306H255, L306H284-1, L306H284-2, L306JD85, L306JD85-2, L306JD95, L306JD95-2, L306K28, L306W35, L59GM4-1, L59H284-1, L59H284-2, L59JD85, L59JD85-2, L59JD95, L59JD95-2, L59K260-1, L59K28, & L59W35 under-mount & mid-mount	2	
15-870	24102	7/8" X 277-5/8"	**Premium Belt** – Spindle Drive Fits RM306-1 rear-mount finish mower	2	
15-871	2474	21/32" X 148-1/8"	**Premium Belt** – Drive Fits 42G-1, 42G-2, 42G-3, & 42G-4 under-mount & mid-mount	4	
15-872	26354	21/32" X 53"	**Premium Belt** – Drive Fits RM42CF-1, RM42CO-1, & RM42LB-1 rear-mount finish mowers	2	
15-873	26840	21/32" X 126-7/8"	**Premium Belt** – Drive Fits RM48JD-1, RM48KB-1, RM48KB-E-1, RM48SB-1, RM48WH-1, & RM48YM-1 rear-mount finish mower	2	
15-874	27652	21/32" X 141-7/8"	**Premium Belt** – Drive Fits 42C-6 under-mount & mid-mount IH Farmall Cub	2	
15-875	27875	21/32" X 209-13/16"	**Premium Belt** – Drive Fits 348KB-1, 348KB-2, 348KBE-2, L59H244, L59H255, & L59K82 under-mount & mid-mount	2	
15-938	27920	21/32" X 138-5/8"	**Premium Belt-Drive** Fits FM72 Flail (set of 2)	7	
15-876	28167	21/32" X 245-5/8"	**Premium Belt** – Drive Fits L306 F10-2, L306GM2, & L59F10-2 under-mount & mid-mount	2	
15-877	28975	21/32" X 105-1/2"	**Premium Belt** – Drive Fits 9144, 9180 Turf Batwing, M1950K, M2050, M2250, M2560, M2760 Mow`n Machine (with 60" decks), & RM500 rear-mount finish mower	2	

Woods

OREGON	Replaces	Size	Description	Type	Product Code
15-878	29010	21/32" X 86-3/8"	**Premium Belt** – Drive Fits 9144 Turf Batwing, M1950K, M2050, M2250, M2560, M2760 Mow`n Machine (with 50" & 52" decks), & RM400 rear-mount finish mower	2	
15-879	29229	21/32" X 133-1/16"	**Premium Belt** – Drive Fits RM600 rear-mount finish mower	2	
15-881	29519	7/8" X 166"	**Premium Belt**	2	
15-882	29523	21/32" X 143-5/8"	**Premium Belt** – Drive Fits S260 Ditchbank (set of 2)	2	
15-883	30435	21/32" X 286-7/16"	**Premium Belt** – Drive Fits L306AC/WD & L306U under-mount & mid-mount	2	
15-884	31615 1001244	21/32" X 118-13/16"	**Premium Belt** – Drive Fits 7144RD, 9180RD, 9204RD Turf Batwing Mowers, RD6000, RD7200, RD8400, & RM48CO-2 rear-mount finish mowers	2	
15-885	31666	21/32" X 220-7/16"	**Premium Belt** – Drive Fits RM306-2 rear-mount finish mowers	2	
115-216	31700	5/8" x 180"	**Belt** – Standard Belt for Deck Drive Fits finish mowers RM59-1, RM59-1, & RM360		
15-886	31720	21/32" X 222-5/8"	**Premium Belt** – Drive Fits F35F15, F35F15-3, F35F170-3, F35JD75-3, F35K72-3, F35K72H-3, F35K82-3, L59F152, L59F152-1, L59F17, & L59F192 under-mount & mid-mount	1	
15-887	31748	1/2" X 130"	**Premium Belt** – Drive Fits 9180, 9204 turf batwing mowers, RM48JD-2, & RM48YM-2 rear-mount finish mowers	2	
15-888	32650	21/32" X 209-1/4"	**Premium Belt** – Drive Fits F35JD65, F35JD65-3, F35Y187-1, F35Y187-2, & F35Y187-3 under-mount & mid-mount	1	
15-889	32855	21/32" X 225-3/8"	**Premium Belt** – Drive Fits F35H244, F35H244-1, F35H244-2, F35H244-3, F35H254-1, F35H254-2, & F35H254-3 under-mount & mid-mount	1	
15-890	32906	21/32" X 202-15/16"	**Premium Belt** – Drive Fits F35H234-1, F35H234-2, F35H235-3, F35H235/M180-3, F35M180-1, F35M180-2, & F35M180-3 under-mount & mid-mount	2	
15-891	32970	21/32" X 229-1/2"	**Premium Belt** – Drive Fits F35H244-3, F35H254-3, F35K72-3, F35K72H-3, F35K82-3, L306K23, & L306K50 under-mount & mid-mount	1	
15-892	33050	21/32" X 264-3/16"	**Premium Belt** – Drive Fits L503AC/B, L503AC/C, & L503F8N under-mount & mid-mount	2	

Belts

Woods

OREGON	Replaces	Size	Description	Type	Product Code
15-893	33056	21/32" X 258-1/4"	**Premium Belt** – Drive Fits L503A & L503A-1 under-mount & mid-mount	2	
15-894	33105	11/16" x 114-13/16"	**Premium Belt** – Drive	2	
115-213	33652	5/8" x 150"	**Belt** – Standard Belt for Deck Drive Fits finish mower RM59-3		
15-895	33710	21/32" X 178-1/16"	**Premium Belt** – Drive Fits RM306-3 rear-mount finish mower	2	
15-896	34517	21/32" X 135-9/16"	**Premium Belt** – Drive Fits C360F152, C360H235, & C360H255 under-mount & mid-mount	4	
15-897	3492	1/2" X 138-3/8"	**Premium Belt** – Drive Fits 348H234-2, 348KB-2, 348KBE-2, 348M180-1, 348M180-2, 348MF-2, 348MF2-1, 348MF4-1, 348YM55-1, 348YM55-2, 59CF-2, 59CL-1, 59CL-2, 59CL-3, 59CL-4, 59CLF-2, 59CLF-3, 59CLF-4, L306K260-1, L306K28, L59 B192, L59K23, L59K260-1, L59K28, L59KD-1, L59M25-1, L59M25-1, L59M25-2, L59S, & L59Y24 under-mount & mid-mount	2	
15-898	35162	1/2" X 134-3/8"	**Premium Belt** – Gearbox to Spindle Drive Fits CM61 commercial walk-behinds	7	
15-899	35252	21/32" X 133"	**Premium Belt** – Spindle Drive Fits CM61 commercial walk-behinds	4	
15-900	35433	9/16" X 44-3/4"	**Premium Belt** – Engine to Deck Gearbox Drive Fits CM48 & CM61 Commercial Walk Behinds	2	
15-901	3546	1/2" X 139-7/8"	**Premium Belt** – Drive Fits 42CF-1, 42CF-6, 42CL-1, 42CL-2, 42CL-3, 42CL-4, 42CL-5, 42CL-6, & L44KL-1 under-mount & mid-mount	2	
15-902	35543	1/2" X 72-11/16"	**Premium Belt** – Deck Drive Fits CM36 commercial walk-behind	1	
15-947	35583	1/2" X 50"	**Premium Belt** – PTO to Deck Drive Fits CM36 commercial walk-behind	2	
15-903	36365	21/32" X 119"	**Premium Belt** – Spindle Drive Fits CM52DH commercial walk-behind	2	
15-904	36371	1-3/16" X 51-7/16"	**Premium Belt** – Wheel Drive Fits CM36BD & CM48BD mowers	5	
15-905	36496	1/2" X 62"	**Premium Belt** – Hydro Drive Fits CM52DH commercial walk-behind	1	
15-906	3652	21/32" X 226-3/4"	**Premium Belt** – Drive Fits 59A-1, 59A-2, 59HB-1, 59HC-1, L306 F10-2, L306-BMC, L306AC/B-1, L306AC/C, L306CA, L306F10-1, L306F8N-1, L306JD85, L306JD85-2, L306JD95, L306K22, L306K24, L306K260-1, L306MF, L306SBL-1, L59A-3, L59AC/B-1, L59AC/C-1, L59BMC, L59CA, L59F10-1, L59F10-2, L59F26, L59F8N, L59F8N-1, L59GM2, L59JD85, L59JD95, L59K260-1, L59MF, & L59SBL-1 under-mount & mid-mount	2	

Woods

OREGON	Replaces	Size	Description	Type	Product Code
15-907	37051	5/8" X 99-3/16"	**Premium Belt**	7	
115-215	4152	5/8" x 213-7/16"	**Belt** – Standard Belt for Drive Fits mid-mount mowers L59, L59A, 59TB, 59PH, 59CLF-2, 59C-1, L59A-3, & 59AC		
15-943	4927	1/2" X 137-11/16"	**Premium Belt** – Drive Fits CO80, DO80, MBO80, MCO80, & MDO80 multi-spindle (set of 4)	2	
15-908	5082	1/2" X 49-1/16"	**Premium Belt** – Spindle Drive Fits FM48-2 front-mount finish mower	7	
15-911	51344	2-3/16" X 88-7/8"	**Premium Belt** – Drive Fits 9128 & 9142 chipper/shredder	9	
15-913	53418	21/32" X 158-5/16"	**Premium Belt** – Spindle Drive Fits FM20.60, FM20.72, FM20.84, FM2060, FM2072, FM2084 front-mount finish mower, PRD6000, PRD7200, PRD8400, RD6000, RD7200, & RD8400 rear-mount finish mower	2	
15-914	5711	21/32" X 241-15/16"	**Premium Belt** – Drive Fits L306A-3, L306JM/H, L306JM/H-1, L306K210, L306K27, L306Y27, L59JM/H, L59K210, L59KL-1, L59KL-2, L59KL-3, L59VAC, LU306H5, LU306KL-1, & LU306VC under-mount & mid-mount	2	
15-916	66503	21/32" X 135-15/16"	**Premium Belt** – Drive Fits C360 under-mount, C360H20 & C360H3040 under-mount & mid-mount	4	
15-918	6814	7/8" X 162-1/16"	**Premium Belt** – Drive Fits 62-1 & 62-2 under-mount & mid-mount	2	
15-920	70003	21/32" X 88-7/8"	**Premium Belt** – Spindle Drive Fits 1250, 1850, 1855, 1860, 2850, 2855, 5180, 5182, 5200, 5210, 5215, & 5250 Mow`n Machine with 44" decks	7	
15-921	70102	21/32" X 65-3/16"	**Premium Belt** – Spindle Drive Fits 1850, 1855, 1860, 2150, 2850, 2855, 5180, 5182, 5200, 5210, 5215, 5250, D5218-2, D5218-3, D5218T, D5221T, D6118T, D6121T, DM5219, & DO4814 Mow`n Machine with 52" decks	7	
15-922	70132	9/16" X 82-1/8"	**Premium Belt** – Spindle Drive Fits 1850, 1855, 1860, 2150, 2850, 2855, 5180, 5182, 5200, 5210, 5215, 5250, D5218-2, D5218-3, D5218T, D5221T, D6118T, D6121T, DM4415, & DM6119 Mow`n Machine with 61" decks	7	
15-939	70197	21/32" X 28-15/16"	**Premium Belt** – PTO Drive Fits 1250 Mow`n Machine	7	
15-940	70341	1/2" X 36"	**Premium Belt** – PTO Drive Fits 1850, 1855, 1860, 2150, 2850, 2855, 2860, 3150, 5120, 5140, 5160, 5180, 5182, 5200, 5210, 5215, 5250, 6140, 6160, 6170, 6180, 6182, 6200, 6210, 6215, 6225, & 6250 Mow`n Machine	7	

Belts

Woods

OREGON	Replaces	Size	Description	Type	Product Code
15-923	70580	1/2" X 103"	**Premium Belt** – Blower Drive Fits 1250, 1850, 1855, 1860, 2850, 2855, 5120, 5140, 5180, 5182, 5200, 5210, 5212, 5215, & 5250 Mow`n Machine with 44" decks	7	
15-924	70581	21/32" X 41"	**Premium Belt** – Blower Drive Fits 1250, 1850, 1855, 1860, 2850, 2855, 2860, 3150, 5120, 5140, 5180, 5182, 5200, 5210, 5212, 5215, 5250, D4414, D4818, D5218, D6118, DO4418T, & DO4818 Mow`n Machine with 48" & 52" decks	7	
15-926	70983	21/32" X 94-9/16"	**Premium Belt** – Spindle Drive Fits 1860, 2150, 5180, 5182, 5200, 5210, 5215, D7221, DM7219, & DM7221 Mow`n Machine with 72" decks	7	
15-928	71429	21/32" X 62-1/4"	**Premium Belt** – Spindle Drive Fits 5180, 5182, 5200, 5210, 5212, 5215, 5250, & D4818 Mow`n Machine with 48" decks	7	
15-929	71506	21/32" X 46-1/16"	**Premium Belt** – Blower Drive Fits 1250, 1850, 1855, 1860, 2850, 2855, 2860, 3150, 5120, 5140, 5180, 5182, 5200, 5210, 5212, 5215, 5250, D4414, D4818, D5218-2, D5218-3, D5218T, D5221T, D6118T, DO4418T, & DO4818 Mow`n Machine with 61" decks	7	
15-930	71526	21/32" X 93-3/8"	**Premium Belt** – Spindle Drive Fits 5120, 5140, & DO4814 Mow`n Machine with 48" decks	7	
15-931	71579	1/2" X 37-1/4"	**Premium Belt** – Hydro Drive Fits 5120, 5140, 5160, 6140, & 6160 Mow`n Machine	7	
15-932	71616	21/32" X 93-3/8"	**Premium Belt** – Spindle Drive Fits 5120, 5140, 5180, 5200, 5210, 5215, 5250, D4414, DM4415, & DM5219 Mow`n Machine with 44" decks	7	
15-933	71838	21/32" X 52-1/8"	**Premium Belt** – Spindle Drive Fits D5218, D5221, D6118, D6121, DM5219, & DO4814 Mow`n Machine with 52" decks	7	
15-934	71879	9/16" X 54-7/16"	**Premium Belt** – Spindle Drive Fits D5218, D5221, D6118, D6121, DM4415, & DM6119 Mow`n Machine with 61" decks	7	
15-935	72818	9/16" X 64-5/8"	**Premium Belt** – Spindle Drive Fits 6170 & DO4818 Mow`n Machine with 48" decks	7	
15-936	73263	1/2" X 38"	**Premium Belt** – Hydro Drive Fits 6140, 6160, & 6170 Mow`n Machine	7	

Wright Stander

75-952	71460002	5/8" x 55-1/8"	**Premium Belt** – Deck For 52" deck	6	
75-949	71460003	5/8" x 80-1/4"	**Premium Belt** – Deck For 42" & deck drive belt fo 52", number BX71	6	

B

OREGON	Replaces	Size	Description	Type	Product Code

Wright Stander

75-951	71460010	5/8" x 53-7/16"	**Premium Belt** – Deck For 48" deck, number BX50	6
75-948	71460011	5/8" x 74"	**Premium Belt** – Deck For 36" & deck drive belt for 48", number BX71	6
115-218	71460033	1/2" x 53"	**Belt** – Standard Belt for Mule Drive Fits Standers large & small frame	
15-056	71460064	5/8" x 64-5/16"	**Premium Belt** – Pump Drive For Stander X (SN 53014 & up) & Sentar (SN 26980 & up)	1
15-057	71460071	5/8" x 96-5/16"	**Premium Belt** – Engine to Blade For Standers with 52" deck (SN 49046 & up), Stander X with 52" deck (SN 53014 & up), & Velke GD mowers with 32" decks (SN 32274 & up)	1
15-055	71460123	5/8" x 78-5/16"	**Premium Belt** – Engine to Blade For Standers with 48" deck (SN 49046 & up) & Stander X with 48" deck (SN 55853 & up)	1

Belt Measurer

75-910

- Measures belts from 14–100" in length
- Heavy-duty aluminum

Belt Rack

75-902

- 36" wood rack with (6) 5-1/2" hooks
- Adjustable rack has 16 placements for hooks

Can't find what you're looking for?
Try us online to search the latest products available.

OregonProducts.com

Belts

Tech Tip — Measure an Aramid Cord Belt

Aramid Fiber Cord is the family name of nylons that include Kevlar®. Oregon® Aramid Fiber Cord belts are the best quality, longest-lasting belts available in the market place.

Examples
75-340 = 3/8" x 40" belt
75-468 = 1/2" x 68" belt
75-598 = 5/8" x 98" belt

Oregon Aramid cord belts are measured by the outside circumference and can easily replace an A or B belt. Simply add 2 inches to the length for "A" belts and 3 inches to the length for "B" belts.

Examples
A48 = 75-450
B40 = 75-543

Measuring Top Width of Aramid Belts

Aramid Belt Part Numbers
Part numbers for the Premium Aramid Fiber Cord belts are coded to save look-up time, are five digits and are determined as followed:

A B C
75-340

A. First two digits are always 75-
B. Third digit is the width of the belt
   3 = 3/8"
   4 = 1/2"
   5 = 5/8"
C. Forth and fifth digit show the length

Tech Tip — Measuring a Belt

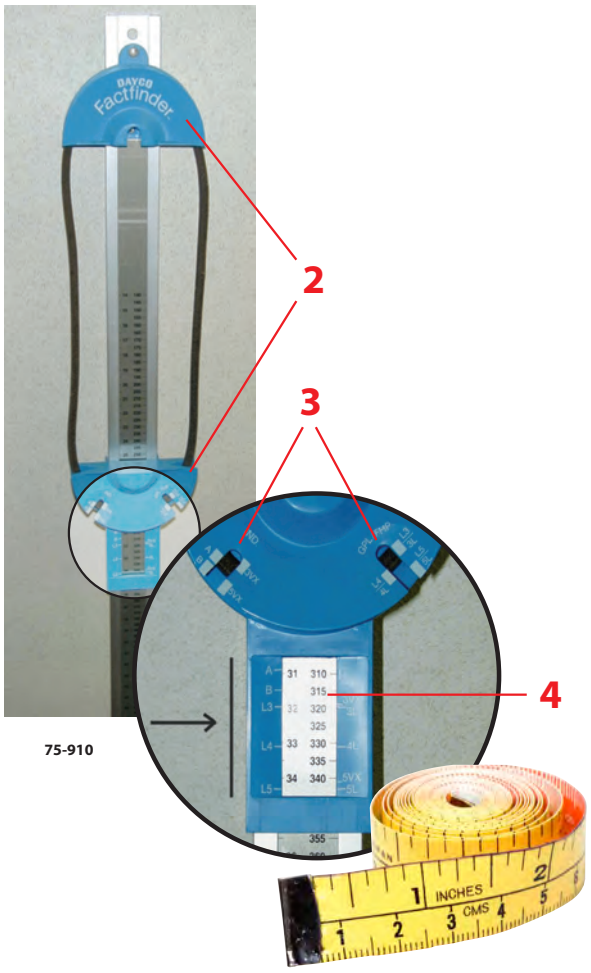

75-910

Oregon Belt Measurer 75-910

1. Define type of belt :
   - 3L = 3/8" or 9.5 mm
   - 4L = 1/2" or 12.7 mm
   - 5L = 5/8" or 15.9 mm
2. Fit the belt over the blue plastic split pulley and pull the bottom half down tight.
3. If you are measuring an industrial belt (bulgy top), look at the left-hand slot in the half pulley.

   The size (section) of the belt is indicated by the intersection of the belt top with one of the white blocks, either A or B.

   If you have an FHP belt (flat top), the same procedure applies to the right-hand slot. The belt in the photo is a 4L belt (the section).
4. Now that you know the belt's profile (section), look at the window below the split pulley and find the section number for your belt (3L, 4L, 5L, A or B) printed in white on the left side of the window. The number opposite or closest is the length in inches of the belt you are measuring.

Cloth Tape Measure

1. Place the beginning of the cloth measuring tape anywhere on the outside of the belt
2. Wrap the tape around the complete circumference of the belt until it wraps back around to its beginning
3. Where the two meet, read the length given

Belts – Premium Aramid Cord

Length	3/8" Aramid	1/2" Aramid	5/8" Aramid
17"	—	—	—
18"	—	75-418	—
19"	—	75-419	—
20"	75-320	75-420	—
21"	75-321	75-421	—
22"	75-322	75-422	—
23"	75-323	75-423	—
24"	75-324	75-424	—
25"	75-325	75-425	75-525
26"	75-326	75-426	—
27"	75-327	75-427	75-527
28"	75-328	75-428	75-528
29"	75-329	75-429	75-529
30"	75-330	75-430	75-530
31"	75-331	75-431	75-531
32"	75-332	75-432	75-532
33"	75-333	75-433	75-533
34"	75-334	75-434	75-534
35"	75-335	75-435	75-535
36"	75-336	75-436	75-536
37"	75-337	75-437	75-537
38"	75-338	75-438	75-538
39"	75-339	75-439	75-539
40"	75-340	75-440	75-540
41"	75-341	75-441	75-541
42"	75-342	75-442	75-542
43"	75-343	75-443	75-543
44"	75-344	75-444	75-544
45"	75-345	75-445	75-545
46"	75-346	75-446	75-546
47"	—	75-447	75-547
48"	75-348	75-448	75-548
49"	75-349	75-449	75-549
50"	75-350	75-450	75-550
51"	—	75-451	75-551
52"	—	75-452	75-552
53"	—	75-453	75-553
54"	—	75-454	75-554
55"	—	75-455	75-555
56"	—	75-456	75-556
57"	—	75-457	75-557
58"	—	75-458	75-558
59"	—	75-459	75-559
60"	—	75-460	75-560
61"	—	75-461	75-561
62"	—	75-462	75-562
63"	—	75-463	75-563
64"	—	75-464	75-564
65"	—	75-465	75-565
66"	—	75-466	75-566
67"	—	75-467	75-567
68"	—	75-468	75-568

Length	3/8" Aramid	1/2" Aramid	5/8" Aramid
69"	—	75-469	75-569
70"	—	75-470	75-570
71"	—	75-471	75-571
72"	—	75-472	75-572
73"	—	75-473	75-573
74"	—	75-474	75-574
75"	—	75-475	75-575
76"	—	75-476	75-576
77"	—	75-477	75-577
78"	—	75-478	75-578
79"	—	75-479	75-579
80"	—	75-480	75-580
81"	—	75-481	75-581
82"	—	75-482	75-582
83"	—	75-483	75-583
84"	—	75-484	75-584
85"		75-485	75-585
86"	—	75-486	75-586
87"	—	75-487	75-587
88"	—	75-488	75-588
89"	—	75-489	75-589
90"	—	75-490	75-590
91"	—	75-491	75-591
92"	—	75-492	75-592
93"	—	75-493	75-593
94"	—	75-494	75-594

Length	3/8" Aramid	1/2" Aramid	5/8" Aramid
95"	—	75-495	75-595
96"	—	75-496	75-596
97"	—	75-497	75-597
98"	—	75-498	75-598
99"	—	75-499	75-599
100"	—	75-400	75-500
101"	—	75-401	—
102"	—	75-402	—
103"	—	75-403	75-503
104"	—	75-404	—
105"	—	75-405	—
106"	—	75-406	—
107"	—	75-407	—
108"	—	75-408	—
109"	—	75-409	—
110"	—	75-410	—
111"	—	75-411	—
112"	—	75-412	—
113"	—	75-413	—
114"	—	75-414	—
117"	—	75-417	—

Belts – Industrial Polyester Cord

Length	"A" Section 1/2"	"B" Section 5/8"
16"	75-A14	–
17"	75-A15	–
18"	75-A16	–
19"	75-A17	–
20"	75-A18	–
21"	75-A19	–
22"	75-A20	75-B19
23"	75-A21	75-B20
24"	75-A22	75-B21
25"	75-A23	75-B22
26"	75-A24	75-B23
27"	75-A25	75-B24
28"	75-A26	75-B25
29"	75-A27	75-B26
30"	75-A28	75-B27
31"	75-A29	75-B28
32"	75-A30	75-B29
33"	75-A31	75-B30
34"	75-A32	75-B31
35"	75-A33	75-B32
36"	75-A34	75-B33
37"	75-A35	75-B34
38"	75-A36	75-B35
39"	75-A37	75-B36
40"	75-A38	75-B37
41"	75-A39	75-B38
42"	75-A40	75-B39
43"	75-A41	75-B40
44"	75-A42	75-B41
45"	75-A43	75-B42
46"	75-A44	75-B43
47"	75-A45	75-B44
48"	75-A46	75-B45
49"	75-A47	75-B46
50"	75-A48	75-B47
51"	75-A49	75-B48
52"	75-A50	75-B49
53"	75-A51	75-B50
54"	75-A52	75-B51
55"	75-A53	75-B52
56"	75-A54	75-B53
57"	75-A55	75-B54
58"	75-A56	75-B55
59"	75-A57	75-B56
60"	75-A58	75-B57
61"	75-A59	75-B58
62"	75-A60	75-B59
63"	75-A61	75-B60
64"	75-A62	75-B61
65"	75-A63	75-B62
66"	75-A64	75-B63
67"	75-A65	75-B64
68"	75-A66	75-B65
69"	75-A67	75-B66
70"	75-A68	75-B67
71"	75-A69	75-B68
72"	75-A70	75-B69
73"	75-A71	75-B70
74"	75-A72	75-B71
75"	75-A73	75-B72
76"	75-A74	75-B73
77"	75-A75	75-B74
78"	75-A76	75-B75
79"	75-A77	75-B76
80"	75-A78	75-B77
81"	75-A79	75-B78
82"	75-A80	75-B79
83"	75-A81	75-B80
84"	75-A82	75-B81
85"	75-A83	75-B82
86"	75-A84	75-B83
87"	75-A85	75-B84
88"	75-A86	75-B85
89"	75-A87	75-B86
90"	75-A88	75-B87
91"	75-A89	75-B88
92"	75-A90	75-B89
93"	75-A91	75-B90

Length	"A" Section 1/2"	"B" Section 5/8"
94"	75-A92	75-B91
95"	75-A93	75-B92
96"	75-A94	75-B93
97"	75-A95	75-B94
98"	75-A96	75-B95
99"	75-A97	75-B96
100"	75-A98	75-B97
101"	75-A99	75-B98
102"	75-A100	75-B99
103"	75-A101	75-B100
104"	75-A102	75-B101
105"	75-A103	75-B102
106"	75-A104	75-B103
107"	75-A105	75-B104
108"	75-A106	75-B105
109"	75-A107	75-B106
110"	75-A108	75-B107
111"	75-A109	75-B108
112"	75-A110	75-B109
113"	75-A111	75-B110
114"	75-A112	75-B111
115"	75-A113	75-B112
116"	75-A114	75-B113
117"	75-A115	75-B114
118"	75-A116	75-B115
119"	75-A117	75-B116
120"	75-A118	75-B117
121"	75-A119	75-B118
122"	75-A120	75-B119
123"	75-A121	75-B120
124"	75-A122	75-B121
125"	75-A123	75-B122
126"	75-A124	75-B123
127"	75-A125	75-B124
128"	75-A126	75-B125
129"	75-A127	75-B126
130"	75-A128	75-B127
131"	75-A129	75-B128
132"	75-A130	75-B129
133"	75-A131	75-B130
134"	75-A132	75-B131
135"	75-A133	75-B132
136"	75-A134	75-B133
137"	75-A135	75-B134
138"	75-A136	75-B135
139"	75-A137	75-B136
140"	75-A138	75-B137
141"	75-A139	75-B138
142"	75-A140	75-B139
143"	75-A141	75-B140
144"	75-A142	75-B141
145"	75-A143	75-B142
146"	75-A144	75-B143
147"	75-A145	75-B144
148"	75-A146	75-B145
149"	75-A147	75-B146
150"	75-A148	75-B147
151"	75-A149	75-B148
152"	75-A150	75-B149
153"	–	75-B150

Belts – Troubleshooting

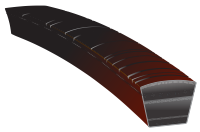
Cracking **A**

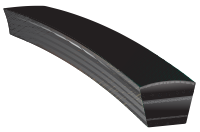
Wear on Sidewalls **B**

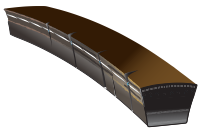
Edge Cord Failure **C**

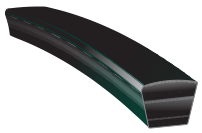
Wear on Top Corner **D**

Surface Flaking Sticky or Swollen **E**

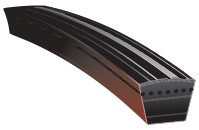
Wear on Top Surface **F**

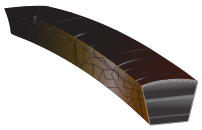
Surface Hard or Stiff **G**

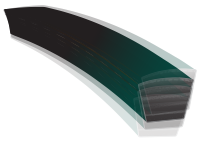
Vibration **H**

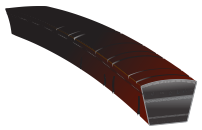
High Belt Temperature **I**

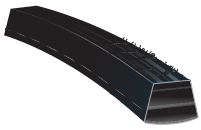
Wear on Bottom Surface **J**

	Probable Cause	Corrective Action
A	**Cracking**	
	Sheaves too small for belt section	Use larger diameter sheaves
	Belt slip	Retension to manufacturer's recommendations
	Backside idler diameter too small	Increase backside idler to acceptable diameter
	Improper belt storage	Don't coil belt too tightly, kink, or bend. Avoid heat & direct sunlight
	Excessive hot or cold temperature	Control drive environment
B	**Wear on Sidewalls**	
	Belt slip	Retension to manufacturer's recommendations
	Sheave misalignment	Realign drive
	Worn sheaves	Replace sheaves
	Incorrect belt	Replace with correct belt size
C	**Edge Core Failure**	
	Sheave misalignment	Check alignment & correct
	Damaged tensile member	Follow correct installation procedure
	Worn or incorrect sheaves	Replace sheaves for correct belt/sheave match
D	**Wear on Top Corner**	
	Belt-to-sheave fit incorrect	Use correct belt/sheave match
	Belt rubbing against guard or drive structure	Remove obstruction
E	**Surface Flaking Sticky or Swollen**	
	Oil or chemical contamination	Do not use belt dressing; eliminate sources of oil, grease, or chemical contamination
F	**Wear on Top Surface**	
	Belt rubbing against guard	Repair or replace guard
	Damaged idler	Repair or replace idler
G	**Surface Hard or Stiff**	
	Hot drive environment	Improve ventilation to drive
	Belt slip	Retension to manufacturer's recommendations
H	**Unusual Vibration**	
	Incorrect belt	Use correct belt/sheave match
	Poor equipment structural design	Check structure for adequate strength & rigidity
	Excessive sheave eccentricity	Replace defective sheave
	Loose drive components	Check machine components, guards, motor mounts, motor pads, bushings, brackets & framework for adequate strength, stability & installation
I	**High Belt Temperature**	
	Hot drive environment	Improve ventilation to drive
	Slipping	Retension until slipping stops
J	**Wear on Bottom Surface**	
	Belt bottoming against sheave groove bottom	Use correct belt/sheave match
	Worn sheaves	Replace sheaves
	Debris in sheaves	Clean sheaves

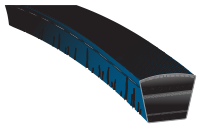

Undercord Cracking **K**

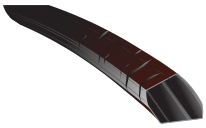

Turns Over or Comes of Drive **L**

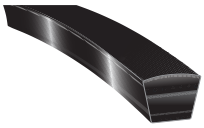

Undercord Sidewall Burn or Hardening **M**

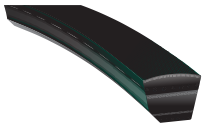

Wear on Bottom Corner **N**

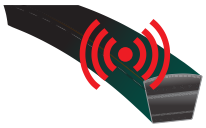

Unusual Noise **O**

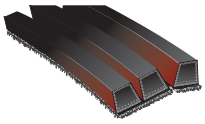

Top of Tie Band Damaged **P**

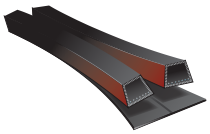

Tie Band Separation **Q**

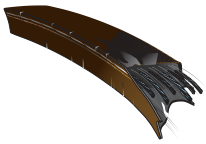

Broken Belt **R**

	Probable Cause	Corrective Action
K	**Undercord Cracking**	
	Sheaves too small for belt section	Use larger diameter sheaves
	Belt slip	Retension to manufacturer's recommendations
	Backside idler diameter too small	Increase backside idler to acceptable diameter
	Excessive hot or cold temperature	Control drive environment
	Improper belt storage	Don't coil belt too tightly, kink, or bend. Avoid heat & direct sunlight
L	**Turns Over or Comes Off Drive**	
	Shock loading or vibration	Check drive design
	Foreign material in grooves	Shield grooves & drive
	Sheave misalignment	Realign drive
	Worn sheave grooves	Replace sheaves
	Subminimal diameter sheave	Replace sheave with correct diameter
M	**Sidewall Burn or Hardening**	
	Belt slip	Retension to manufacturer's recommendations
	Worn sheaves	Replace sheaves
	Under-designed drive	Redesign to manufacturer's recommendations
	Shaft movement	Check for center distance changes
N	**Wear on Bottom Corner**	
	Belt-to-sheave fit incorrect	Use correct belt/sheave match
	Worn sheaves	Replace sheaves
O	**Unusual Noise**	
	Incorrect belt for sheaves	Use correct belt size & type
	Incorrect tension	Check belt tension & adjust
	Worn sheaves	Replace sheaves
	Debris in sheaves	Clean sheaves; improve shielding; remove rust, paint; or remove dirt from grooves
	Sheave misalignment	Realign drive
P	**Top of Tie Band Damage**	
	Interference with guard	Check & adjust guard
	Backside idler malfunction	Replace or repair backside idler
	Debris in sheaves	Clean sheaves
Q	**Tie Band Separation**	
	Improper groove spacing	Use sheaves manufactured to industry specifications
	Worn or incorrect sheaves	Replace sheaves
	Sheave misalignment	Realign drive
R	**Broken Belt**	
	Under-designed drive	Redesign to manufacturers recommendations
	Belt rolled or pried onto sheave	Use drive center distance adjustment when installing
	Object falling into drive	Provide adequate guard or drive protection
	Severe shock load	Redesign to accommodate shock load

Blade Adaptors

OREGON	Replaces	Description	Product Code

AYP

65-002*	193707 184590 532193707 (Husqvarna) 532184590 (Husqvarna)	**Blade Adapter** For walk-behind mowers built after 2005 Diameter: 1"	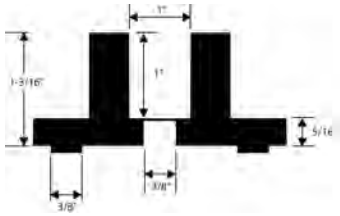 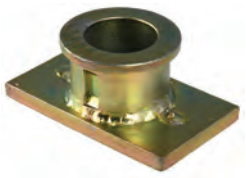
65-006*	850977	**Blade Adapter** For all newer style walk-behind mowers Depth: 1", diameter: 7/8" POWDERED METAL	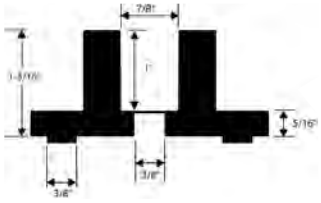 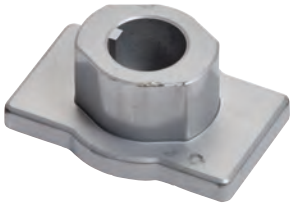
65-007*	851514	**Blade Adapter** For all new-style mulching mowers Depth: 7/8", diameter: 7/8" POWDERED METAL	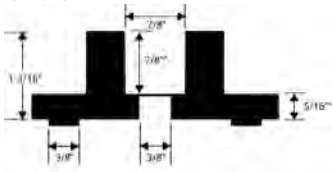 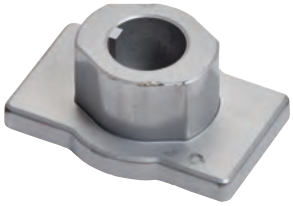
65-008	AYP 420097 532420097 (Husqvarna)	**Blade Adaptor** Fits 21" models PR160N (2009–2010), PR625N, & XT625N, Husqvarna model 6021P	

Bobcat

80-122**	71002B 146281 (Lawn Boy)	**Blade Adapter** DIECAST	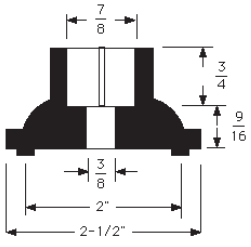

MTD

65-220*	753-0210 748-0235 748-0283	**Blade Adapter** Splined for new style rider Fits 30" model 796 Side holes: 5/16" POWDERED METAL	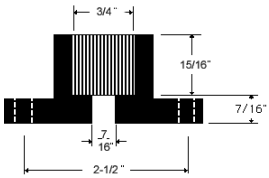 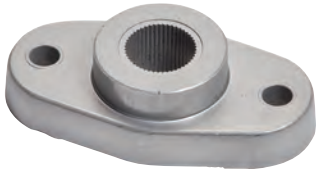

*adaptor only **kit with hardware

OREGON	Replaces	Description	Product Code

MTD

65-221*
80-145**
748-0300 (adapter)

Blade Adapter
Splined for riding mower
Fits riders series models (1985–1988) 300, 400, 500, 600, 700, & 800
Side hole: 5/16"
POWDERED METAL

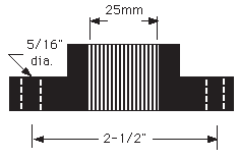

65-222*
753-0348B

Blade Adapter
Keyed for push mowers
Side hole: 5/16", keyway: 3/16"
POWDERED METAL

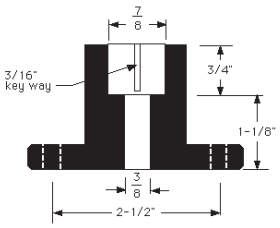

65-224*
80-146**
748-0323
948-0323 (adapter)
753-0484 (kit)

Blade Adapter
Fits push mowers (1986–1996) 010, 020, 030, 040, 050, 060, 070, & 080, self-propelled series 090, 100, 200, 300, 400, 500, 700, & 800
Built-in key: 3/16"
Side holes: 3/8"
POWDERED METAL

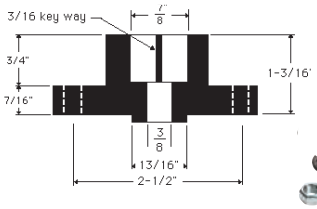

65-226*
748-0324 (adapter)
753-0485 (kit)

Blade Adapter – Splined
Fits push mowers (1989–1992) 070, 080, & 090, self-propelled series 100, 200, 400, 500, 700, & 800
Side holes: 3/8"
POWDERED METAL

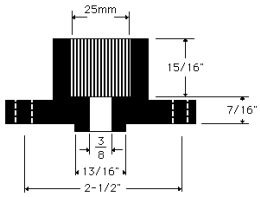

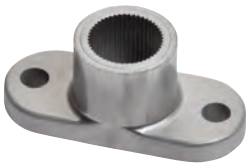

65-228*
748-0365

Blade Adapter – Splined
Use with Oregon® 98-537 & 98-538 mulching blades
Bore: 25 mm, side holes: 7/16"
(1994–1996)
POWDERED METAL

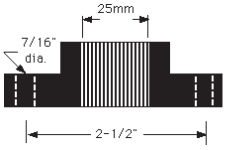

65-009
736-0524B

Blade Bell Support
For many walk-behind mowers (1994–2013)

65-225
748-0376E
748-0376C
748-0376B
746-0376A

Blade Adapter
For many walk-behind mowers (1994–2013)

***adaptor only** ****kit with hardware**

Blade Adaptors

OREGON	Replaces	Description	Product Code

Murray

65-206* — 54211, 20617

Blade Adapter
For all riding mowers with double "D" center hole
Keyway: 5/32"
POWDERED METAL

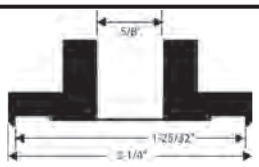

65-208* — 91926, 92466

Blade Adapter – Splined
For blades with round center-hole on riding mower & lawn tractor (1990 to present)
Use with Oregon® 82-243, 82-023, & 82-250 spindles
Diameter: 2-5/32"
Splined shaft: 5/8"
POWDERED METAL

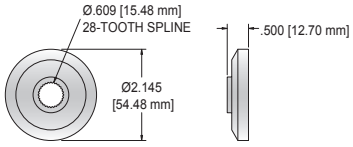

65-204* — 690411

Blade Adapter
For 42", 46", & 52" rail deck frames
Use with Oregon 82-245 spindle
Diameter: 2-5/32"
Splined ID: 5/8"
POWDERED METAL

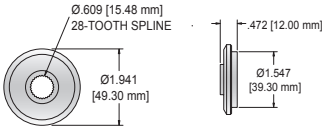

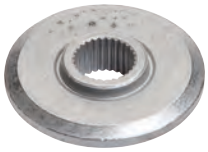

Sears

65-006 — AYP 850977

Blade Adapter
For all newer style walk-behind mowers
Depth: 1"
Diameter: 7/8"
POWDERED METAL

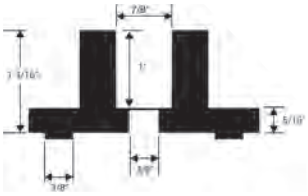

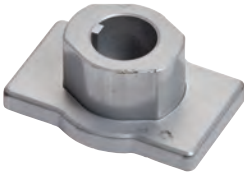

65-007 — AYP 851514

Blade Adapter
For all new-style mulching mowers
Depth: 7/8"
Diameter: 7/8"
POWDERED METAL

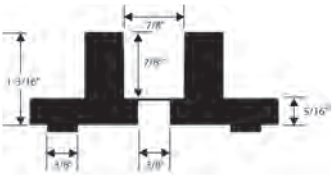

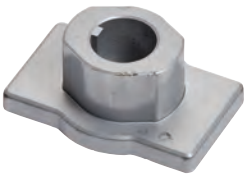

Snapper

65-229* — 1-2927, 7012927

Blade Adapter
Use with Oregon 99-103, 99-107, & 99-920 blades
For steel deck walk-behind mowers
Keyway: 5/32"
POWDERED METAL

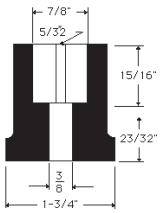

65-229

Walker

65-230* — 5706

Blade Adapter
Use wth Oregon 91-910, 91-911, 91-912 91-913, & 91-914 blades

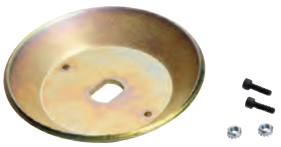

B

*adaptor only **kit with hardware

X304

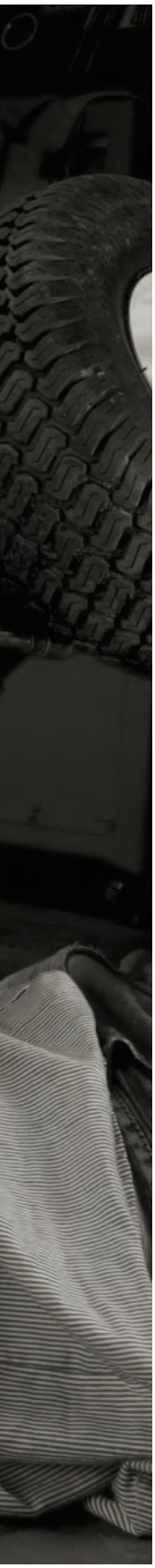

Gator® Mower Blades . . . . . LG 346–347
100-Series and Sand Blades . . . . . LG 348
Common Blade Measurements and Arbor Hole Types . . . . . LG 349
Blades by Length . . . . . LG 350–367
Universal Blades . . . . . LG 368
OEM Exact Replacement Blades . . . . . LG 369–583
Edger Blades . . . . . LG 584–591

B

Gator® Lawn Mower Blades

The Oregon® Gator series of lawnmower blades deliver a full range of enhancements designed to boost performance and durability. The exclusive Gator Mulcher® feature on every Gator blade provides outstanding bagging and discharge efficiency, saving you time and hassle.

G3™ Engineered with the core Gator mulching features that make them a great choice for normal and abrasive conditions.

— G3 blades may include additional features and/or other dimensions than listed below.

G5™ An optimum combination for a wide range of mower units. Features a high-lift contour as well as two additional, premium features to improve performance and retain blade sharpness.

G6® Heavy-duty blades designed for commercial applications and to withstand punishing conditions, while offering the full-range of features that make Gator series blades unique.

SPECIFICATIONS

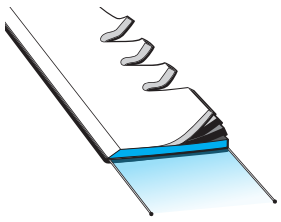

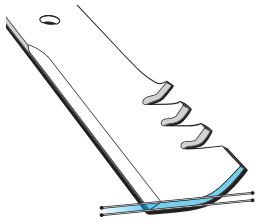

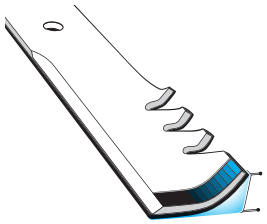

	Width	Thickness	Air Lift*
G6	3.00" 76.2 mm	0.250" 6.35 mm	1.00" 25.4 mm
G5	3.00" 76.2 mm	≤ 0.203" ≤ 5.156 mm	1.00" 25.4 mm
G3	≤ 2.50" ≤ 63.5 mm	≤ 0.203" ≤ 5.156 mm	0.75" 19.05 mm

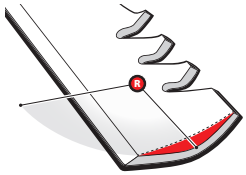

Radius-cut end

All Gator blades feature progressive geometry to maintain maximum cutting length throughout the life of the blade.

* tops of Gator teeth extend 1/4" more than the air lift height listed

Oregon® mower blades are created using manufacturing processes that combine the latest technology with a comprehensive range of quality control standards. These processes and standards are designed to provide Oregon blades with the consistency and longevity that professionals demand and homeowners prefer.

QUALITY CONTROL

- Oregon blades not only meet specifications, Oregon blades often are the specification
- Oregon consistently delivers quality mower blades through established manufacturing standards for 26 characteristics – look for the Certified Quality label on Oregon blades.

COMPUTER CONTROLLED STRAIGHTENING

- Superior straightness and consistency
- Cleaner cut, especially on multi-blade decks
- Reduced vibration

SELECTION

- Find a full range of replacement blades for most residential and commercial mowers at oregonproducts.com or in the Oregon catalog.

FEATURES

Superior Side Discharge & Bagging	Superior Mulching	Increased Cutting	Preserves Cutting Edge	Superior Longevity
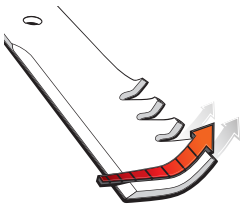		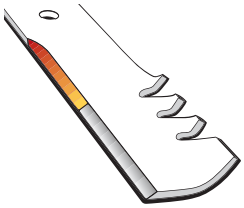	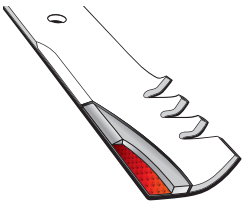	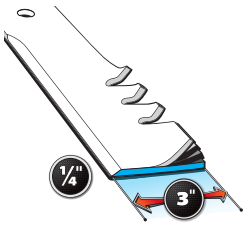
High-lift	Gator Mulcher®	X-Tended Cutting Length™	Fusion®	Thicker & Wider
★	★	★	★	★
★	★	★	★	☆
★	★	☆	☆	☆
The aggressive blade angle increases air flow to push debris up-and-out for superior bagging or side discharge.	Cleaner, more efficient cutting performance can eliminate the need to bag, saving time and hassle.	Up to twice the cutting length optimizes the cutting efficiency with each revolution.	Tungsten carbide is "fused" into the blade – creating an ultra-hard layer at the cutting edge and increasing the time between sharpening.	Greater width and thickness extends blade life and allows for longer lifting arch to improve bagging and mulching.

B

Lawn Mower Blades

100-Series Blades

Ultra X-Tended Cutting Edge™
- Double Bevel Technology
- Reduces overall blade noise by up to 1.5 decibels
- Maximum mulching length

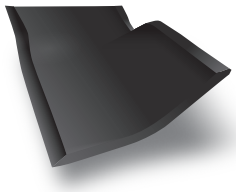

Made From US Boron Steel
- Perfect balance between durability & ductility
- Rockwell 43–48 HRc

Superior Flatness and Straightness
- Clean cut for manicured look

Optimum Packaging
- Labeling includes OEM & aftermarket cross references

Sand Blades

Heavy Duty for Abrasive Conditions
- 2 to 3 times the life of a standard Oregon® blade when used in sandy and abrasive soil conditions
- Currently available for select 16-1/4", 18", & 21" Scag applications only

B

Common Blade Measurements

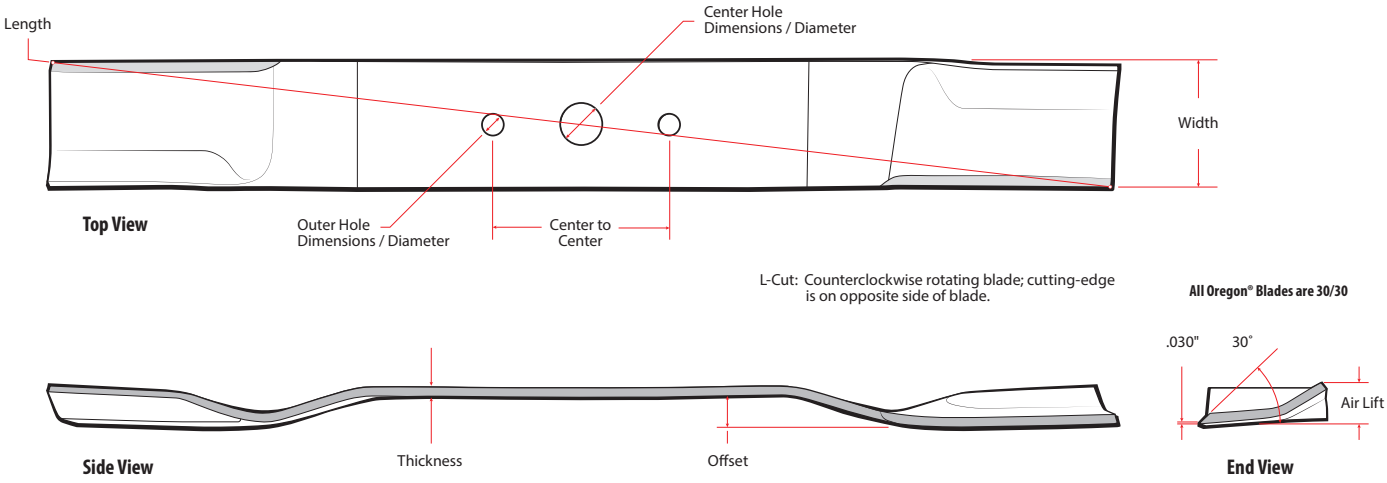

Blade Arbor Hole Types

5 or 7-Point Star
Center holes may be 5 or 7-point star shaped.

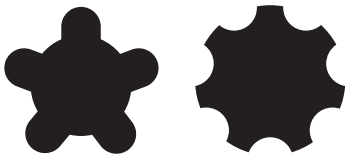

Square or Rectangular
The MTD built blades on many walk-behind lawn mowers have a "bow-tie" hole. In this case the Oregon replacement blade will have a rectangular center hole which will fit on the bow-tie pattern on the blade adapter.

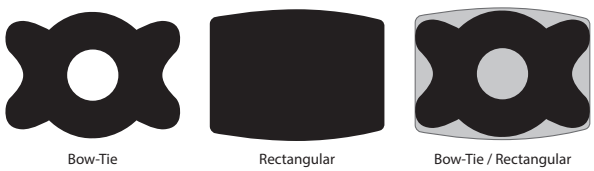

MTD Blades
The MTD built blades (Bolens, Cub Cadet, Troy-Bilt, White, Yard Machine and Yardman) may have a 6-point star. Oregon replacement blades will have a "Y" shaped center hole which will fit exactly on the 6-point star on the blade spindle.

The two sizes of the 6-point star.
If your blade spindle has a bolt and lock washer that holds the blade to the machine, you would use the 11/16" star or "Y" blade

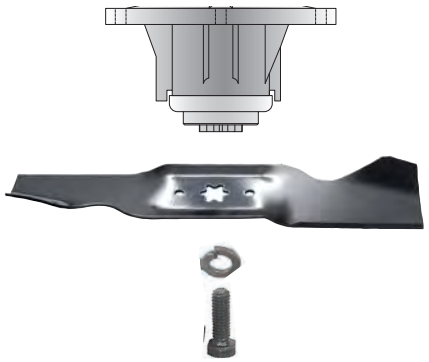

If your blade is secured with a large flange nut, then you would use the 5/8" star or "Y" blade

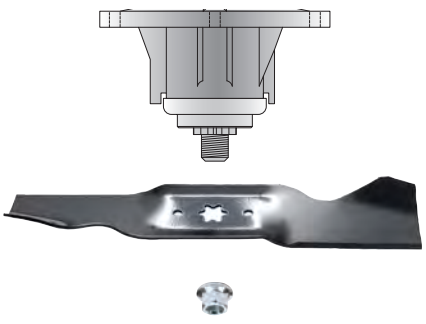

B

Blades by Length

OREGON	Length	Center Hole	Outer Hole	Center to Center	Width	Thickness	Offset	Air Lift	L-Cut	Type
94-124	5-1/4	3/4			2.500	0.187	1/2	5/8		
91-594	5-1/4	3/4			2.500	0.187	1/2	5/16		
91-767	11-3/8	7/8			2.5	0.250	7/16	1-1/4	L	
96-349	11-15/16	3/8	5/16	2-3/8	2.5	0.203	0	3/4		G3™
91-802	12-1/8	3/4 X 5/8	1/4	1-5/8	2	0.203	0	7/8		
96-632	12-1/8	3/4 X 5/8	1/4	1-5/8	2.5	0.203	0	3/4		G3™
91-636	12-3/16	5/8			2.5	0.203	0	1		
96-661	12-3/16	5/8			2.5	0.203	0	1		G3™
91-310	13-3/4	3/8	5/16	2-3/8	2	0.164	0	1-1/16		
92-039	13-3/4	5/8			2.5	0.203	0	3/4		
90-643	13-7/8	3/4			2.5	0.203	0	3/4		G3™
91-244	13-7/8	5/8			2	0.203	1/8	1-1/16		
91-805	13-7/8	3/4			2	0.203	0	1-1/16		
92-040	13-7/8	5/8			2	0.203	1/8	1-1/16		
96-040	13-7/8	5/8			2.25	0.203	0	3/4		G3™
96-374	14	5/8			2.5	0.250	0	3/4		G3™
91-265	14-1/4	5/8			2.5	0.203	0	1		
96-324	14-1/4	5/8			2.5	0.203	0	1		G3™
91-500	14-3/8	11/16			2	0.203	0	13/16		
396-714	14-1/2	5/8			3	0.250	0	1		G6®
596-303	14-1/2	11/16			3	0.203	0	1		G5™
91-167	14-1/2	11/16			2.5	0.187	0	1-1/4		
91-501	14-1/2	5/8			2.5	0.203	0	1-1/16		
91-712	14-1/2	3/4	3/8	3-1/16	2	0.187	0	1-1/8	L	
91-804	14-1/2	3/4			2	0.203	0	7/8		
92-217	14-1/2	5/8			2.5	0.203	5/16	1-1/8		
96-303	14-1/2	11/16			2.5	0.203	0	1		G3™
96-808	14-1/2	5/8			2.5	0.203	5/16	3/4		G3™
95-010	14-9/16	1-1/4	1/2	3	2.5	0.187	0	1		
595-088	14-5/8	5 pt. star			3	0.164	0	1		G5™
95-084	14-5/8	5 pt. star			2.5	0.203	0	1		
95-088	14-5/8	5 pt. star			2.5	0.203	0	3/4		G3™
98-056	14-13/16	11/16 6 pt. star	5/16	2-1/2	3	0.120	5/16	1-1/8		
98-069	14-13/16	5/8 6 pt. star			3	0.120	5/16	1-3/16		
98-486	14-13/16	3/8	5/16	2-1/2	3	0.149	5/16	1-1/4		
98-670	14-13/16	5/8 6 pt. star			2.5	0.187	5/16	3/4		G3™
91-327	14-7/8	3/4			3	0.203	5/16	1-1/4		
91-342	14-7/8	7/16	1/2	1-5/8	2	0.149	1/4	13/16		
95-058	14-7/8	5/8			2.5	0.203	0	1		
98-061	14-7/8	5/8 6 pt. star			2.5	0.149	7/16	1-3/16		
98-083	14-7/8	3/4			2.5	0.203	7/16	1-1/8		
98-084	14-7/8	5/8 6 pt. star			2.5	0.203	7/16	1-1/8		
98-637	14-7/8	5/8 6 pt. star			2.5	0.187	7/16	3/4		G3™
491-530	14-15/16	11/16			2.5	0.203	0	1-1/4		
496-399	14-15/16	11/16			2.5	0.203	0	3/4		G3™
391-608	15	5/8			3	0.250	0	1		G6®
396-713	15	1/2			3	0.250	5/16	1		G6®
91-536	15	1/2			2.5	0.250	5/16	1		
91-557	15	1/2			2.5	0.250	5/16	3/4		
91-608	15	5/8			2.5	0.250	0	1		
92-150	15	1/2			2.5	0.203	5/16	1-1/4		
96-343	15	1/2			2.5	0.203	5/16	1		G3™
392-142	15-1/8	1/2			3	0.250	0	1		G6®
91-414	15-1/8	3/4			2.5	0.203	1/2	11/16		
92-142	15-1/8	1/2			2.5	0.203	0	1		
596-327	15-1/4	5/8			3	0.203	0	1		G5™
91-369	15-1/4	5/8			2.5	0.203	0	1		
91-373	15-1/4	5/8			2.5	0.203	0	1		

OREGON	Length	Center Hole	Outer Hole	Center to Center	Width	Thickness	Offset	Air Lift	L-Cut	Type
96-327	15-1/4	5/8			2.5	0.203	0	1		G3™
91-097	15-5/16	3/8	3/8	2-3/4	2	0.187	0	1		
92-146	15-5/16	3/4	3/8	2-9/16	2	0.187	0	1		
594-601	15-3/8	5/8	5/16	1-1/4	3	0.134	5/16	1		G5™
91-430	15-3/8	11/16	3/8	1-1/2	2	0.187	0	1		
95-006	15-3/8	5 pt. star			2.25	0.149	1/8	15/16		
95-014	15-3/8	3/8			2.25	0.187	0	1		
95-049	15-3/8	5 pt. star			2.25	0.187	0	1		
95-607	15-3/8	3/8			2.25	0.187	0	3/4		G3™
595-614	15-1/2	5 pt. star			3	0.164	0	1		G5™
92-147	15-1/2	3/4			2.5	0.312	1/2	0		
94-026	15-1/2	5/8			2.5	0.187	5/16	3/4		
94-039	15-1/2	5/8			2.5	0.203	5/16	15/16		
94-061	15-1/2	5/8			2.5	0.187	5/16	1		
94-615	15-1/2	5/8			2.5	0.203	5/16	3/4		G3™
95-045	15-1/2	5 pt. star			2.25	0.149	1/8	1		
95-052	15-1/2	5 pt. star			2.25	0.149	1/8	1		
95-614	15-1/2	5 pt. star			2.5	0.187	0	3/4		G3™
90-205	15-11/16	5/8			2.5	0.203	0	13/16		
96-302	15-11/16	5/8			2.5	0.203	0	1		G3™
597-606	15-3/4	13/16			3	0.164	5/8	1		G5™
69-239-0	15-3/4	1	3/8 x 1/2	1-7/16	2.5	0.149	0	1		G3™
69-247-0	15-3/4	1	3/8 x 1/2	1-7/16	2.25	0.149	0	5/8		
69-248-0	15-3/4	1	3/8 x 1/2	1-7/16	2.25	0.149	0	5/8		
69-250-0	15-3/4	1	3/8 x 1/2	1-7/16	2.25	0.149	5/8	5/8		
69-251-0	15-3/4	1	3/8 x 1/2	1-7/16	2.25	0.149	5/8	5/8		
97-012	15-3/4	13/16			2.25	0.187	5/8	1		
97-017	15-3/4	13/16			2.25	0.134	11/16	1-1/8		
97-123	15-3/4	13/16			2.25	0.134	5/8	1		
97-606	15-3/4	13/16			2.5	0.187	5/8	3/4		G3™
591-594	15-13/16	13/16			3	0.164	5/8	1		G5™
91-589	15-13/16	3/4			2.5	0.164	5/8	3/4		
98-080	15-15/16	3/4			3	0.203	7/16	1-5/16		
396-725	16	11/16			3	0.250	0	1		G6®
596-373	16	3/4	5/16	2-1/2	3	0.187	1/2	1		G5™
91-073	16	3/4	5/16	2-1/2	2.5	0.203	9/16	1-1/8		
91-389	16	11/16			2	0.203	0	13/16		
91-448	16	11/16			2.5	0.203	0	15/16		
91-615	16	1	3/8	2-9/16	2.5	0.203	0	1-1/4		
96-394	16	11/16			2.5	0.203	0	1		G3™
96-397	16	1	3/8	2-9/16	2.5	0.203	0	1		G3™
90-644	16-1/16	3/4			2.5	0.203	0	3/4		G3™
91-806	16-1/16	3/4			2	0.203	0	15/16		
96-013	16-1/16	3/8			4	0.134	0	1-1/4		
590-685	16-1/8	3/4	3/8	2-9/16	3	0.187	0	1		G5™
599-132	16-1/8	3/4			3	0.203	0	1		G5™
90-685	16-1/8	3/4	3/8	2-9/16	2.5	0.203	0	3/4		G3™
91-705	16-1/8	3/4	3/8	2-9/16	2	0.203	0	1-1/16		
91-723	16-1/8	3/4	3/8	2-9/16	2	0.203	0	1-1/8		
99-132	16-1/8	3/4			2.5	0.203	0	1-1/16		
396-809	16-3/16	5/8			3	0.250	3/8	1		G6®
596-816	16-3/16	5/8			3	0.203	3/8	1		G5™
92-153	16-3/16	5/8			2.5	0.250	5/16	1-1/8		
92-919	16-1/4	15/16			3.000	0.203	0	5/8		
198-063	16-1/4	5/8 6 pt. star			2.5	0.149	7/16	1-1/8		
392-205	16-1/4	15/16			3	0.250	3/8	1		G6®
396-321	16-1/4	15/16			3	0.250	0	1		G6®
396-716	16-1/4	5/8			3	0.250	0	1		G6®

Blades by Length

OREGON®	Length	Center Hole	Outer Hole	Center to Center	Width	Thickness	Offset	Air Lift	L-Cut	Type
492-726	16-1/4	15/16			3	0.203	3/8	1-1/16		
593-600	16-1/4	5/8			3	0.203	1/2	1		G5™
595-087	16-1/4	5 pt. star			3	0.164	0	1		G5™
596-310	16-1/4	5/8			3	0.203	0	1		G5™
596-321	16-1/4	15/16			3	0.203	0	1		G5™
598-627	16-1/4	11/16 6 pt. star	5/16	2-1/2	3	0.164	5/16	1		G5™
598-634	16-1/4	5/8 6 pt. star			3	0.164	5/16	1		G5™
598-640	16-1/4	5/8 6 pt. star			3	0.164	7/16	1		G5™
91-180	16-1/4	5/8			2.5	0.187	0	1		
91-183	16-1/4	5/8			2.5	0.250	0	1		
91-313	16-1/4	5/8			2.5	0.203	0	1		
91-330	16-1/4	3/4			3	0.203	5/16	1-3/8		
91-368	16-1/4	5/8			2.5	0.203	0	1		
91-480	16-1/4	5/8	1/4	1-5/8	2.5	0.250	0	1-3/16		
92-026	16-1/4	15/16			2.5	0.203	0	1		
92-029	16-1/4	15/16			2.5	0.203	0	1		
93-005	16-1/4	5/8	1/4	1-5/8	2.5	0.250	0	1-3/16		
93-009	16-1/4	5/8			2.5	0.203	1/2	1-1/8		
95-087	16-1/4	5 pt. star			2.5	0.203	0	1		
96-310	16-1/4	5/8			2.5	0.203	0	3/4		G3™
96-321	16-1/4	15/16			2.5	0.203	0	1		G3™
98-054	16-1/4	5/8 6 pt. star			3	0.120	5/16	1-3/16		
98-057	16-1/4	11/16 6 pt. star	5/16	2-1/2	3	0.120	5/16	1-3/16		
98-085	16-1/4	5/8 6 pt. star			2.5	0.203	7/16	1-1/8		
98-487	16-1/4	3/8	5/16	2-1/2	3	0.149	5/16	1-3/16		
98-634	16-1/4	5/8 6 pt. star			2.5	0.187	5/16	3/4		G3™
98-640	16-1/4	5/8 6 pt. star			2.5	0.187	7/16	3/4		G3™
99-127	16-1/4	5/8			2.5	0.203	0	1-1/16		
98-082	16-5/16	3/4			2.5	0.203	7/16	1-1/8		
91-266	16-3/8	5/8			2.5	0.203	0	1		
96-328	16-3/8	5/8			2.5	0.203	0	1		G3™
94-125	16-1/2	5/8			2.500	0.250	0	1-1/8		
92-156	16-1/2	5/8			3.000	0.203	0	1-1/2		
391-606	16-1/2	13/16			3	0.250	0	1		G6®
391-614	16-1/2	3/4			3	0.250	0	1		G6®
392-165	16-1/2	5/8			3	0.250	1/2	1		G6®
396-735	16-1/2	5/8			3	0.250	0	1		G6®
596-308	16-1/2	5/8			3	0.203	0	1		G5™
596-330	16-1/2	3/4	5/16	2-1/2	3	0.187	1/2	1		G5™
91-056	16-1/2	3/4	5/16	2-1/2	2.5	0.203	1/2	1-5/16		
91-606	16-1/2	13/16			2.25	0.149	0	5/8		
91-620	16-1/2	5/8			2.5	0.203	0	1		
91-621	16-1/2	5/8			3	0.203	0	1-1/2		
92-036	16-1/2	5/8			2.5	0.250	0	1		
92-054	16-1/2	9/16			2.5	0.203	0	1		
92-145	16-1/2	5/8			2.5	0.203	0	1		
92-165	16-1/2	5/8			2.5	0.203	1/2	1		
92-207	16-1/2	5/8			2.5	0.203	0	13/16		
92-737	16-1/2	5/8			2.5	0.203	0	1-1/16		
92-743	16-1/2	5/8			2.5	0.203	0	1		
96-308	16-1/2	5/8			2.5	0.203	0	1		G3™
96-381	16-1/2	3/4			3	0.203	7/16	3/4		G3™
98-081	16-1/2	3/4			3	0.203	7/16	1-3/8		
99-120	16-1/2	3/8			2.75	0.164	1/4	7/8		
99-126	16-1/2	5/8			2.5	0.203	0	1-1/16		
99-500	16-1/2	5/8			3	0.203	0	1-3/16		
392-047	16-9/16	11/16			3	0.250	1/2	1		G6®
90-697	16-9/16	3/4	5/16	2-1/2	2.5	0.203	1/2	3/4		G3™

OREGON	Length	Center Hole	Outer Hole	Center to Center	Width	Thickness	Offset	Air Lift	L-Cut	Type
91-003	16-9/16	3/4			2.5	0.203	7/16	7/8		
91-333	16-9/16	3/4	5/16	2-1/2	2.5	0.203	1/2	15/16		
91-401	16-9/16	13/16			2.5	0.203	5/16	13/16		
91-447	16-9/16	13/16			2.5	0.203	7/16	1-1/16		
92-047	16-9/16	11/16			2.5	0.250	1/2	1-1/8		
95-011	16-9/16	1-1/4	1/2	3	2.5	0.187	0	1		
96-047	16-9/16	11/16			2.5	0.203	1/2	3/4		G3™
96-618	16-9/16	13/16			2.5	0.203	7/16	1		G3™
391-613	16-5/8	1-1/8			3	0.250	1/2	1		G6®
391-617	16-5/8	11/16			3	0.250	5/16	1		G6®
392-300	16-5/8	3/4			3	0.250	5/8	1		G6®
396-732	16-5/8	13/16			3	0.250	3/8	1		G6®
592-124	16-5/8	7/8			3	0.203	5/8	1		G5™
596-332	16-5/8	13/16			3	0.203	3/8	1		G5™
91-381	16-5/8	13/16			2.5	0.203	3/8	1-3/16		
91-383	16-5/8	13/16			2.5	0.203	1/4	3/4		
91-613	16-5/8	1-1/8			2.5	0.250	9/16	1-1/8		
92-124	16-5/8	7/8			2.5	0.250	9/16	1-1/8		
92-300	16-5/8	3/4			2.5	0.250	11/16	1-1/8		
96-332	16-5/8	13/16			2.5	0.203	3/8	1		G3™
195-062	16-11/16	5 pt. star	5/16	3-15/16	2.5	0.203	0	1-1/4		
596-615	16-11/16	5 pt. star			3	0.187	0	1		G5™
91-433	16-11/16	11/16			2	0.203	0	1-1/16		
91-435	16-11/16	11/16			2	0.250	3/8	1-1/16		
95-068	16-11/16	5 pt. star			2.5	0.203	5/16	13/16		
96-603	16-11/16	3/4			2.5	0.203	11/16	3/4		G3™
96-615	16-11/16	5 pt. star			2.5	0.203	0	1		G3™
69-241-0	16-3/4	1	3/8 x 1/2	1-7/16	2.5	0.149	0	1		G3™
69-249-0	16-3/4	1	3/8 x 1/2	1-7/16	2.25	0.149	0	5/8		
69-252-0	16-3/4	1	3/8 x 1/2	1-7/16	2.25	0.149	5/8	5/8		
91-703	16-3/4	1			2.5	0.203	9/16	1-1/8	L	
91-087	16-7/8	1			2.5	0.203	13/16	13/16		
92-175	16-7/8	1			2.5	0.250	3/4	13/16	L	
92-180	16-15/16	5/8			2.500	0.203	5/16	1		
396-354	16-15/16	13/16			3	0.250	1/2	1		G6®
592-160	16-15/16	5/8			3	0.187	5/16	1		G5™
596-354	16-15/16	13/16			3	0.203	5/8	1		G5™
90-348	16-15/16	13/16			2.5	0.203	9/16	1-1/8		
91-096	16-15/16	3/8	3/8	2-3/4	2	0.187	0	1		
91-123	16-15/16	1/2			2.5	0.203	5/16	1-5/16		
91-126	16-15/16	1/2			2.5	0.203	5/16	3/4		
92-160	16-15/16	5/8			2.5	0.203	5/16	1-1/4		
92-161	16-15/16	5/8			2.5	0.203	5/16	3/4		
96-354	16-15/16	13/16			2.5	0.203	9/16	3/4		G3™
99-617	16-15/16	1/2			2.5	0.203	5/16	3/4		G3™
392-139	17	3/4			3	0.250	7/16	1		G6®
396-723	17	5/8			3	0.250	0	1		G6®
396-805	17	5/8			3	0.250	5/16	1		G6®
590-669	17	11/16			3	0.203	0	1		G5™
592-616	17	7 pt. star			3	0.164	5/16	1		G5™
596-323	17	5/8			3	0.203	0	1		G5™
90-669	17	11/16			2.5	0.203	0	3/4		G3™
91-108	17	11/16	3/8	3-11/16	2.5	0.164	3/8	1-3/16		
91-117	17	7/8 x 1-1/4			2.5	0.187	7/16	1		
91-146	17	11/16			2.5	0.187	0	1-1/4		
91-242	17	5/8			2	0.203	5/16	1-1/8		
91-502	17	5/8			2.5	0.203	0	1-3/16		
91-505	17	5/8			2.5	0.250	0	1-1/8		

Blades by Length

OREGON	Length	Center Hole	Outer Hole	Center to Center	Width	Thickness	Offset	Air Lift	L-Cut	Type
91-508	17	5/8			2.5	0.250	0	1-3/16		
91-525	17	5/8			2.5	0.250	5/16	1-3/16		
91-715	17	3/4	3/8	2-9/16	2	0.187	0	1		
92-104	17	7 pt. star			2.75	0.164	3/16	1-3/16		
92-139	17	3/4			3	0.203	7/16	1-5/16		
92-616	17	7 pt. star			2.5	0.187	1/4	3/4		G3™
92-675	17	11/16	3/8	3-11/16	2.5	0.187	3/8	1-3/16		G3™
96-323	17	5/8			2.5	0.203	0	1		G3™
191-108	17-1/16	11/16	3/8	3-11/16	2.51	0.164	1/4	1		
396-770	17-1/16	7/8			3	0.250	1/2	1		G6®
91-079	17-1/16	7/8			2.5	0.250	7/16	1-1/16		
91-496	17-1/16	11/16	3/8	3-11/16	2.5	0.164	1/4	1-3/8		
91-586	17-1/16	7 pt. Star			2.5	0.187	3/16	1-3/8		
92-105	17-1/16	7 pt. star			2.75	0.164	1/4	1-1/4		
92-144	17-1/16	7/8			3	0.250	7/16	1-5/16		
92-158	17-1/16	5/8			2.5	0.250	5/16	1-1/8		
396-738	17-3/16	11/16			3	0.250	0	1		G6®
90-656	17-3/16	3/4			2.5	0.203	7/16	3/4		G3™
91-393	17-3/16	11/16			2.5	0.203	0	13/16		
91-415	17-3/16	3/4			2.5	0.203	1/2	11/16		
98-152	17-1/4	5/8 5 pt. star			2.500	0.164	9-16	1-3/16		
392-141	17-1/4	1/2			3	0.250	0	1		G6®
92-141	17-1/4	1/2			2.5	0.203	0	1		
98-037	17-1/4	3/8	5/16	2-1/2	2.5	0.187	5/16	1-1/8		
598-064	17-5/16	5/8 6 pt. star			3	0.149	5/16	1		G5™
98-064-1	17-5/16	5/8 6 pt. star			2.5	0.187	1/4	1-3/16		
595-609	17-3/8	5 pt. star			3	0.164	0	1		G5™
95-018	17-3/8	5 pt. star			2.25	0.149	1/8	15/16		
95-027	17-3/8	3/8			2.25	0.187	0	1		
95-050	17-3/8	5 pt. star			2.25	0.187	0	1		
95-609	17-3/8	5 pt. star			2.5	0.187	0	3/4		G3™
92-912	17-1/2	15/16			3.000	0.203	3/8	1		
392-206	17-1/2	15/16			3	0.250	3/8	1		G6®
492-731	17-1/2	15/16			3	0.203	3/8	1-1/16		
594-078	17-1/2	5/8			3	0.164	3/8	1		G5™
594-085	17-1/2	5/8			3	0.203	0	1		G5™
91-573	17-1/2	3/8	3/8	3	2.5	0.187	1/2	3/4		G3™
94-059	17-1/2	5/8			2.25	0.164	7/16	1-3/16		
94-063	17-1/2	5/8			2.25	0.164	1/2	15/16		
94-085	17-1/2	5/8			2.5	0.250	0	1		
94-128	17-1/2	5/8			2.25	0.164	5/16	1-1/4		
96-382	17-1/2	5/8			2.25	0.187	7/16	3/4		G3™
97-018	17-11/16	13/16			2.25	0.149	3/8	1-1/8		
198-086	17-3/4	5/8 6 pt. star			2.5	0.149	7/8	3/4		
595-077	17-3/4	5 pt. star			3	0.164	0	1		G5™
69-242-0	17-3/4	1	3/8 x 1/2	1-7/16	2.5	0.149	0	1		G3™
69-253-0	17-3/4	1	3/8 x 1/2	1-7/16	2.25	0.149	5/8	5/8		
69-258-0	17-3/4	1	3/8 x 1/2	1-7/16	2.25	0.149	0	5/8		
69-263-0	17-3/4	1	3/8 x 1/2	1-7/16	2.5	0.149	5/8	1		G3™
90-142	17-3/4	3/8	3/8 x 1-3/8	2-1/2	2.25	0.149	1/8	5/8		
95-077	17-3/4	5 pt. star			2.5	0.203	0	1		
596-387	17-13/16	3/4			3	0.164	15/16	1		G5™
92-174	17-13/16	5/8			2.5	0.203	0	7/8		
96-387	17-13/16	3/4			2.5	0.187	1	3/4		G3™
92-136	17-7/8	5/8			3.000	0.203	0	1-1/2		
396-704	17-7/8	5/8			3	0.250	0	1		G6®
591-938	17-7/8	5/8 6 pt. star			3	0.164	15/16	1		G5™
592-015	17-7/8	3/4			3	0.164	0	1		G5™

OREGON	Length	Center Hole	Outer Hole	Center to Center	Width	Thickness	Offset	Air Lift	L-Cut	Type
596-704	17-7/8	5/8			3	0.203	0	1		G5™
90-206	17-7/8	5/8			2.5	0.203	0	13/16		
90-207	17-7/8	5/8			3	0.250	5/8	1		
90-618	17-7/8	3/8	3/8 x 1-3/8	2-1/2	2.25	0.149	1/4	5/8		
91-178	17-7/8	1/2			2.75	0.187	9/16	3/4		
91-938	17-7/8	5/8 6 pt. star			2.5	0.187	15/16	3/4		G3™
92-015	17-7/8	3/4			2.5	0.203	0	1		
92-044	17-7/8	5/8			2.5	0.203	0	1-1/16		
92-211	17-7/8	5/8			2.25	0.187	1/16	15/16		
92-212	17-7/8	5/8			2.5	0.203	0	1		
96-318	17-7/8	5/8			2.5	0.203	0	3/4		G3™
98-087	17-7/8	3/4			2.5	0.149	1	1-1/8		
98-094	17-7/8	bow-tie			2.5	0.149	1	1-1/8		
98-097	17-7/8	5/8 6 pt. star			2.5	0.149	15/16	1-3/8		
98-671	17-7/8	bow-tie	5/16	2-1/2	2.5	0.149	1	3/4		G3™
94-132	18	5/8			2.500	0.250	0	1-1/8		
94-135	18	5/8			2.500	0.250	0	11/16		
393-601	18	5/8			3	0.250	1/2	1		G6®
396-322	18	15/16			3	0.250	0	1		G6®
396-726	18	5/8			3	0.250	0	1		G6®
396-729	18	1/2			3	0.250	5/16	1		G6®
396-806	18	5/8			3	0.250	5/16	1		G6®
41-104	18	5/8			2.5	0.203	3/4	3/4		
593-601	18	5/8			3	0.203	1/2	1		G5™
595-085	18	5 pt. star			3	0.164	0	1		G5™
596-322	18	15/16			3	0.203	0	1		G5™
596-329	18	1/2			3	0.203	5/16	1		G5™
596-344	18	5/8			3	0.203	0	1		G5™
596-817	18	5/8			3	0.203	5/16	1		G5™
91-039	18	5/8			2.5	0.203	1/2	1		
91-170	18	1/2			2.5	0.203	0	1		
91-181	18	5/8			2.5	0.187	0	1		
91-184	18	5/8			2.5	0.250	0	1		
91-218	18	5/8			2.5	0.164	0	1		
91-235	18	5/8			2.5	0.250	0	7/8		
91-256	18	5/8			2.5	0.203	0	1		
91-312	18	5/8			2.5	0.203	0	1		
91-335	18	5/8			2.5	0.203	0	1		
91-532	18	1/2			2.5	0.250	5/16	1		
91-535	18	1/2			2.5	0.250	5/16	1-3/16		
91-538	18	1/2			2.5	0.203	0	1		
91-558	18	1/2			2.5	0.250	5/16	3/4		
91-622	18	5/8			2.5	0.203	0	1		
91-623	18	5/8			3	0.203	0	1-1/2		
91-637	18	5/8			2.5	0.203	0	1		
92-027	18	15/16			2.5	0.203	0	1		
92-030	18	15/16			2.5	0.203	0	1		
92-151	18	5/8			2.5	0.250	5/16	1-1/8		
93-006	18	5/8	1/4	1-5/8	2.5	0.250	0	1-3/16		
93-010	18	5/8			2.5	0.203	1/2	1-1/8		
93-601	18	5/8			2.5	0.203	1/2	3/4		G3™
94-018	18	1/2			2.5	0.187	3/16	11/16		
94-022	18	1/2			2.5	0.187	3/16	1		
94-053	18	5/8			2.5	0.250	0	1		
94-064	18	5/8			2.5	0.187	3/16	11/16		
94-618	18	1/2			2.5	0.203	3/16	3/4		G3™
95-085	18	5 pt. star			2.5	0.203	0	1		
96-322	18	15/16			2.5	0.203	0	1		G3™

Blades by Length

OREGON	Length	Center Hole	Outer Hole	Center to Center	Width	Thickness	Offset	Air Lift	L-Cut	Type
96-329	18	1/2			2.5	0.203	5/16	1		G3™
96-344	18	5/8			2.5	0.203	0	3/4		G3™
96-395	18	5/8			2.5	0.203	3/16	3/4		G3™
98-065	18	bow-tie	5/16	2-1/2	2.25	0.134	5/16	1-1/8		
99-501	18	5/8			3	0.203	0	1-3/16		
390-698	18-1/8	3/4	3/8	2-9/16	3	0.250	0	1		G6®
590-698	18-1/8	3/4	3/8	2-9-16	3	0.187	0	1		G5™
90-698	18-1/8	3/4	3/8	2-9/16	2.5	0.203	0	3/4		G3™
91-706	18-1/8	3/4	3/8	2-9/16	2	0.203	0	1		
92-135	18-1/8	1/2			2.5	0.203	0	1		
595-613	18-3/16	5 pt. star			3	0.164	0	1		G5™
95-026	18-3/16	5 pt. star			2.25	0.187	1/8	1		
95-034	18-3/16	3/8	3/8	10	2.5	0.187	0	7/8		
95-036	18-3/16	5 pt. star			2.25	0.134	1/8	1		
95-613	18-3/16	5 pt. star			2.5	0.187	0	3/4		G3™
97-105	18-3/16	7/8 X 1			2.25	0.149	3/16	15/16		
98-496	18-5/16	3/8	5/16	2-1/2	3	0.149	5/16	1-1/8		
92-179	18-3/8	1/2			2.500	0.203	5/16	3/4		
92-154	18-3/8	5/8			2.500	0.203	5/16	1		
592-137	18-3/8	5/8			3	0.187	5/16	1		G5™
91-129	18-3/8	1/2			2.5	0.203	5/16	1-1/4		
92-137	18-3/8	5/8			2.5	0.203	5/16	1-1/4		
92-163	18-3/8	5/8			2.5	0.203	5/16	3/4		
96-129	18-3/8	1/2			2.5	0.203	5/16	3/4		G3™
596-818	18-7/16	5/8			3	0.203	5/16	1		G5™
92-157	18-7/16	5/8			2.5	0.203	5/16	1-1/8		
195-072	18-7/16	5 pt. star	5/16	3-15/16	2.75	0.187	1/2	1-3/16		
595-605	18-7/16	5 pt. star			3	0.164	1/2	1		G5™
95-082	18-7/16	5 pt. star			2.5	0.187	5/16	13/16		
95-605	18-7/16	5 pt. star			2.5	0.187	1/2	3/4		G3™
392-208	18-1/2	5/8			3	0.250	0	1		G6®
398-672	18-1/2	5/8 6 pt. star			3	0.250	1/2	1		G6®
596-333	18-1/2	3/4			3	0.203	1/2	1		G5™
596-808	18-1/2	5/8			3	0.203	0	1		G5™
598-672	18-1/2	5/8 6 pt. star			3	0.203	1/2	1		G5™
599-133	18-1/2	3/4			3	0.203	0	1		G5™
91-440	18-1/2	3/4			3	0.203	1/2	1-1/4		
91-713	18-1/2	3/4	3/8	2-9/16	2	0.187	0	3/4		
91-714	18-1/2	3/4	3/8	2-9/16	2.5	0.164	0	1-5/16		
92-042	18-1/2	5/8			2.5	0.203	0	1-1/16		
92-208	18-1/2	5/8			2.5	0.203	0	13/16		
92-738	18-1/2	5/8			2.5	0.203	0	1		
96-133	18-1/2	3/4			2.5	0.203	0	3/4		G3™
96-333	18-1/2	3/4			2.5	0.203	1/2	3/4		G3™
98-072	18-1/2	5/8 6 pt. star			3	0.203	1/2	1-1/4		
98-672	18-1/2	5/8 6 pt. star			2.5	0.203	1/2	1		G3™
99-133	18-1/2	3/4			2.5	0.203	0	1-1/8		
396-748	18-5/8	11/16			3	0.250	1/2	1		G6®
396-796	18-5/8	1-1/8			3	0.250	1/2	1		G6®
396-811	18-5/8	1-1/8			3	0.250	5/8	1		G6®
396-812	18-5/8	7/8			3	0.250	5/8	1		G6®
592-617	18-5/8	7 pt. star			3	0.164	3/8	1		G5™
596-812	18-5/8	7/8			3	0.203	5/8	1		G5™
91-404	18-5/8	13/16			2.5	0.203	5/16	7/8		
91-436	18-5/8	1-1/8			2.5	0.250	1/2	1-1/16		
92-048	18-5/8	11/16			2.5	0.250	1/2	1-1/8		
92-103	18-5/8	7 pt. star			2.75	0.187	1/4	1-1/8		
92-125	18-5/8	1-1/8			2.5	0.250	5/8	1-1/8		

OREGON	Length	Center Hole	Outer Hole	Center to Center	Width	Thickness	Offset	Air Lift	L-Cut	Type
92-127	18-5/8	7/8			2.5	0.250	9/16	1-1/8		
92-132	18-5/8	1-1/8			2.5	0.250	5/8	13/16		
92-617	18-5/8	7 pt. star			2.5	0.187	3/8	3/4		G3™
96-748	18-5/8	11/16			2.5	0.203	1/2	3/4		G3™
98-151	18-5/8	5/8 5 pt. star			2.500	0.164	9-16	1-3/16		
396-706	18-11/16	13/16			3	0.250	3/8	1		G6®
596-306	18-11/16	13/16			3	0.203	3/8	1		G5™
91-380	18-11/16	13/16			2.5	0.203	3/8	1-1/8		
91-384	18-11/16	13/16			2.5	0.203	3/8	3/4		
96-306	18-11/16	13/16			2.5	0.203	3/8	1		G3™
396-803	18-3/4	5/8			3	0.250	5/16	1		G6®
69-243-0	18-3/4	1	3/8 x 1/2	1-7/16	2.5	0.149	0	1		G3™
69-254-0	18-3/4	1	3/8 x 1/2	1-7/16	2.25	0.149	5/8	5/8		
69-259-0	18-3/4	1	3/8 x 1/2	1-7/16	2.25	0.149	0	5/8		
69-264-0	18-3/4	1	3/8 x 1/2	1-7/16	2.5	0.149	5/8	1		G3™
90-143	18-3/4	3/8	3/8 x 1-3/8	2-1/2	2.25	0.149	1/8	5/8		
91-093	18-3/4	3/8	3/8	2-3/4	2	0.187	0	1		
94-060	18-3/4	5/8			2.25	0.164	5/16	1-1/8		G3™
94-070	18-3/4	5/8			2.25	0.164	5/16	7/8		
96-803	18-3/4	5/8			2.25	0.164	5/16	3/4		G3™
90-619	18-7/8	3/8	3/8 x 1-3/8	2-1/2	2.25	0.149	1/4	5/8		
98-019	18-7/8	3/8	5/16	2-1/2	2	0.134	5/16	7/8		
396-719	18-15/16	13/16			3	0.250	1/2	1		G6®
596-719	18-15/16	13/16			3	0.203	1/2	1		G5™
90-354	18-15/16	13/16			2.75	0.250	1/2	1-3/8		
95-095	19	5/8			2.500	0.250	0	1-1/4		G3™
396-769	19	7/8			3	0.250	7/16	1		G6®
596-351	19	3/4			3	0.203	5/8	1		G5™
596-769	19	7/8			3	0.203	7/16	1		G5™
91-138	19	7/8			2.5	0.250	7/16	1-1/16		
92-118	19	7/8			3	0.250	7/16	1-5/16		
92-140	19	bow-tie	5/16	2-1/2	2.25	0.134	1/4	1-1/8		
92-149	19	1/2			2.5	0.250	0	1-1/4		
92-607	19	9/16			2.5	0.203	0	3/4		G3™
94-043	19	1/2			2.5	0.250	3/16	7/8		
95-092	19	5/8			2.5	0.250	0	1		
96-351	19	3/4			3	0.203	9/16	1		G3™
96-364	19	7/8			2.5	0.203	7/16	3/4		G3™
96-701	19	1/2			2.5	0.250	3/16	1		G3™
98-091	19	3/4			3	0.203	7/16	1-5/16		
396-800	19-3/16	7/16	3/8	1-9/16	3	0.250	0	1		G6®
595-601	19-1/4	5 pt. star			3	0.164	0	1		G5™
94-032	19-1/4	5/8			2.5	0.187	9/16	3/4		
94-602	19-1/4	5/8			2.5	0.203	9/16	3/4		G3™
95-031	19-1/4	3/8			2.25	0.187	0	1		
95-033	19-1/4	5 pt. star			2.25	0.134	1/8	1		
95-038	19-1/4	5 pt. star			2.25	0.187	1/8	1-1/16		
95-047	19-1/4	5 pt. star			2.25	0.187	0	1		
95-601	19-1/4	5 pt. star			2.5	0.187	0	3/4		G3™
195-003	19-5/16	5 pt. star	5/16	3-1/8	2.25	0.134	1/8	7/8		
195-033	19-5/16	5 pt. star	3/8	3-1/8	2.25	0.134	1/8	1-1/16		
198-058	19-5/16	5/8 6 pt. star			2.75	0.149	3/8	1-1/2		
598-628	19-5/16	5/8 6 pt. star			3	0.164	5/16	1		G5™
94-038	19-5/16	5/8			2.5	0.187	9/16	1-1/4		
98-044	19-5/16	3/8	5/16	2-1/2	3	0.149	5/16	1-3/8		
98-537	19-5/16	3/8	7/16	2-1/2	3	0.149	5/16	1		
98-628	19-5/16	5/8 6 pt. star			2.5	0.187	5/16	3/4		G3™
98-105	19-3/8	5/8	5/16	2-1/2	2.750	0.138	7/16	1-1/8	5/16	

Blades by Length

OREGON	Length	Center Hole	Outer Hole	Center to Center	Width	Thickness	Offset	Air Lift	L-Cut	Type
198-052	19-3/8	5/8 6 pt. star			3	0.149	5/16	1-1/4		
91-057	19-3/8	3/4	5/16	2-1/2	2.75	0.187	5/16	1-1/2		
91-328	19-3/8	3/4			3	0.203	5/16	1-5/16		
91-329	19-3/8	3/4			3	0.203	5/16	7/8		
95-015	19-3/8	3/8			2.25	0.187	0	1		
95-099	19-3/8	5 pt. star			2.25	0.149	1/8	1		
96-697	19-3/8	3/4			3	0.203	5/16	3/4		G3™
98-493	19-3/8	3/8	5/16	2-1/2	3	0.149	5/16	1-3/16		
396-352	19-7/16	7 pt. Star			3	0.250	7/16	1		G6®
597-602	19-7/16	13/16			3	0.164	3/8	1		G5™
92-109	19-7/16	7 pt. star			3	0.203	7/16	1-3/4		
97-010	19-7/16	13/16			2.25	0.120	3/8	1		
97-021	19-7/16	13/16			2.25	0.134	5/16	1		
97-107	19-7/16	13/16			2.25	0.134	5/8	1-1/8		
97-118	19-7/16	13/16			2.25	0.187	5/8	1-3/16		
99-614	19-7/16	1			2.5	0.203	3/16	3/4		G3™
92-913	19-1/2	15/16			3.000	0.203	3/8	1		
191-392	19-1/2	11/16	3/8	4	2.53	0.203	7/16	5/8		
396-709	19-1/2	11/16			3	0.250	7/16	1		G6®
596-309	19-1/2	11/16			3	0.203	7/16	1		G5™
91-398	19-1/2	11/16			3	0.203	7/16	1-3/4		
91-400	19-1/2	11/16			3	0.203	7/16	1-1/2		
91-403	19-1/2	11/16			2.5	0.203	3/8	1-3/16		
96-309	19-1/2	11/16			2.5	0.203	7/16	3/4		G3™
97-003	19-1/2	13/16			2.75	0.134	1/2	15/16		
97-016	19-5/8	3/8			2.25	0.134	3/8	11/16		
96-005	19-11/16	3/8			2	0.134	1/8	1/2		
69-244-0	19-3/4	1	3/8 x 1/2	1-7/16	2.5	0.149	0	1		G3™
69-255-0	19-3/4	1	3/8 x 1/2	1-7/16	2.25	0.149	5/8	5/8		
69-260-0	19-3/4	1	3/8 x 1/2	1-7/16	2.25	0.149	0	5/8		
69-265-0	19-3/4	1	3/8 x 1/2	1-7/16	2.5	0.149	5/8	1		G3™
90-144	19-3/4	3/8	3/8 x 1-3/8	2-1/2	2.25	0.149	1/8	5/8		
96-809	19-3/4	7/16	3/8	2-1/2	2.25	0.134	7/16	3/4		G3™
90-620	19-7/8	3/8	3/8 x 1-3/8	2-1/2	2.25	0.149	1/4	5/8		
97-022	19-7/8	3/8			2.25	0.134	3/8	7/8		
595-024	19-15/16	5/8	3/8	1-7/8	3	0.134	5/8	1		G5™
95-024	19-15/16	5/8	3/8	1-7/8	2.5	0.149	9/16	7/8		
95-041	19-15/16	5/8	3/8	1-7/8	2.5	0.149	7/16	15/16		
91-911	20	5/8	3/16	3	2.75	0.203	1-1/16	3/4		
94-029	20	5/8			2.5	0.250	3/16	1		
94-620	20	5/8			2.5	0.203	3/16	3/4		G3™
95-044	20	5/8	3/8	1-7/8	2	0.134	5/16	13/16		
95-051	20	5/8	3/8	1-7/8	2.25	0.134	7/16	11/16		
96-802	20	1/2			2.5	0.250	1/2	3/4		G3™
98-001	20	13/16	3/8	2-1/2	2.25	0.134	5/16	7/8		
98-066	20	bow-tie	5/16	2-1/2	2.25	0.134	5/16	1-1/8		
98-068	20	bow-tie	5/16	2-1/2	2.25	0.134	5/16	13/16		
91-452	20-1/16	1/2			2	0.250	1/2	7/8	L	
392-301	20-3/16	3/4			3	0.250	5/8	1		G6®
91-046	20-3/16	1/2			2.5	0.250	1/2	15/16	L	
91-761	20-3/16	5/8			2	0.203	13/16	3/4	L	
91-762	20-3/16	5/8			2	0.203	13/16	11/16		
92-301	20-3/16	3/4			2.5	0.250	11/16	1-1/8		
591-259	20-1/4	5/8			3	0.164	0	1		G5™
91-141	20-1/4	3/4			2	0.250	5/8	15/16		
91-259	20-1/4	5/8			2.5	0.203	0	1		
96-605	20-1/4	3/4			2.5	0.203	5/8	3/4		G3™
97-004	20-5/16	7/8			2.75	0.134	1/2	7/8		

OREGON	Length	Center Hole	Outer Hole	Center to Center	Width	Thickness	Offset	Air Lift	L-Cut	Type
97-006	20-5/16	13/16			2.25	0.134	3/8	1		
97-024	20-5/16	13/16			2.25	0.134	5/16	1		
92-121	20-3/8	11/16			2.5	0.250	5/8	1-1/8		
92-122	20-3/8	11/16			2.5	0.250	9/16	1-1/8		
97-109	20-3/8	13/16			2.25	0.134	7/16	1-1/16		
97-119	20-3/8	13/16			2.25	0.187	7/16	1-1/8		
97-604	20-3/8	13/16			2.5	0.187	7/16	3/4		G3™
91-391	20-7/16	3/4			2	0.203	0	1		
191-015	20-7/16	3/4			2.5	0.187	1/2	15/16		
94-126	20-1/2	5/8			2.500	0.250	0	1		
94-130	20-1/2	5/8			2.500	0.250	0	1-1/8		
94-133	20-1/2	5/8			2.500	0.250	0	11/16		
94-138	20-1/2	4/8			2.500	0.250	0	1		
91-255	20-1/2	5/8			2.000	0.250	0	5/8		
92-126	20-1/2	5/8			3.000	0.203	0	1-1/2		
391-574	20-1/2	3/8	3/8	3	3	0.250	1/2	1		G6®
392-025	20-1/2	15/16			3	0.250	0	1		G6®
396-612	20-1/2	7/8			3	0.250	5/8	1		G6®
396-734	20-1/2	7/8			3	0.250	0	1		G6®
396-739	20-1/2	1/2			3	0.250	0	1		G6®
396-740	20-1/2	5/8			3	0.250	0	1		G6®
396-807	20-1/2	5/8			3	0.250	5/16	1		G6®
396-810	20-1/2	1-1/8			3	0.250	5/8	1		G6®
596-319	20-1/2	5/8			3	0.203	0	1		G5™
596-734	20-1/2	7/8			3	0.203	0	1		G5™
596-749	20-1/2	15/16			3	0.203	0	1		G5™
596-810	20-1/2	1-1/8			3	0.203	5/8	1		G5™
596-815	20-1/2	5/8			3	0.203	5/16	1		G5™
90-109	20-1/2	5/8			3	0.250	0	1-3/16		
91-050	20-1/2	3/8	3/8	3	2.25	0.187	1/2	13/16		
91-144	20-1/2	3/4			3	0.203	1/2	1-5/16		
91-188	20-1/2	1/2			2.5	0.203	0	1		
91-217	20-1/2	1/2			2.5	0.203	0	1		
91-239	20-1/2	5/8			2.5	0.250	3/4	1-1/16		
91-253	20-1/2	5/8			2.5	0.250	0	1-1/8		
91-264	20-1/2	5/8			2.5	0.203	0	1		
91-311	20-1/2	5/8			2.5	0.203	0	1		
91-378	20-1/2	5/8			2.5	0.203	0	5/8		
91-394	20-1/2	7/8			2.5	0.312	0	1		
91-503	20-1/2	5/8			2.5	0.203	0	1-3/16		
91-506	20-1/2	5/8			2.5	0.250	0	1-3/16		
91-509	20-1/2	5/8			2.5	0.250	0	1-1/8		
91-527	20-1/2	5/8			2.5	0.250	5/16	1-3/16		
91-574	20-1/2	3/8	3/8	3	2.5	0.187	1/2	3/4		G3™
91-732	20-1/2	3/4 X 5/8			2.25	0.187	0	7/8		
92-025	20-1/2	15/16			2.5	0.203	0	1		
92-028	20-1/2	15/16			3	0.203	0	1-5/16		
92-031	20-1/2	15/16			2.5	0.203	0	1		
92-037	20-1/2	5/8			2.5	0.203	0	1-1/16		
92-038	20-1/2	5/8			2.5	0.203	0	13/16		
92-082	20-1/2	15/16			2.5	0.203	0	1		
92-128	20-1/2	1-1/8			2.5	0.250	5/8	1-1/8		
92-130	20-1/2	1-1/8			2.5	0.250	5/8	13/16		
92-159	20-1/2	5/8			2.5	0.250	5/16	1-1/8		
92-209	20-1/2	15/16			3	0.203	0	1-5/16		
92-213	20-1/2	5/8			2.25	0.187	1/16	15/16		
94-055	20-1/2	5/8			2.5	0.250	0	1		
94-072	20-1/2	1/2			2.5	0.250	0	3/4		

Blades by Length

OREGON	Length	Center Hole	Outer Hole	Center to Center	Width	Thickness	Offset	Air Lift	L-Cut	Type
96-319	20-1/2	5/8			2.5	0.203	0	3/4		G3™
96-363	20-1/2	1-1/8			2.5	0.203	9/16	3/4		G3™
96-612	20-1/2	7/8			2.5	0.203	5/8	3/4		G3™
96-677	20-1/2	3/4			3	0.203	1/2	1		G3™
96-749	20-1/2	15/16			2.5	0.203	0	1		G3™
96-801	20-1/2	1/2			2.5	0.250	0	1		G3™
96-810	20-1/2	7/16	3/8	2.5	2.25	0.134	7/16	3/4		G3™
396-787	20-9/16	1-1/8			3	0.250	1/2	1		G6®
396-816	20-9/16	1-5/16			3	0.250	5/8	1		G6®
596-787	20-9/16	1-1/8			3	0.203	1/2	1		G5™
91-005	20-9/16	3/8			2.75	0.134	5/16	1		
91-438	20-9/16	1-1/8			2.5	0.250	1/2	1-1/8		
91-616	20-9/16	1	3/8	2-9/16	2.5	0.203	0	1-1/4		
92-049	20-9/16	1-1/8			2.5	0.250	9/16	1-1/8		
92-115	20-9/16	7/8			2.5	0.250	5/8	3/4		
92-123	20-9/16	7/8			2.5	0.250	7/16	13/16		
96-041	20-9/16	3/8			2.75	0.134	1/4	3/4		G3™
96-398	20-9/16	1	3/8	2-9/16	2.5	0.203	0	1		G3™
96-787	20-9/16	1-1/8			2.5	0.203	1/2	3/4		G3™
392-201	20-11/16	15/16			3	0.250	3/8	1		G6®
492-730	20-11/16	15/16			3	0.203	3/8	1-1/16		
91-417	20-11/16	3/4	9/16	3-9/16	2.25	0.149	1/2	11/16		
96-620	20-11/16	3/8	3/8	2-3/4	2.75	0.164	3/16	3/4		G3™
99-103	20-11/16	3/8	3/8	2-3/4	2.75	0.164	3/16	1		
99-107	20-11/16	3/8	3/8	2-3/4	2.75	0.164	3/16	1		
99-119	20-11/16	3/8			2.5	0.149	3/8	1-1/8		
99-121	20-11/16	3/8	3/8	2-3/4	2.75	0.164	3/16	1-1/4		
92-915	20-3/4	15/16			3.000	0.203	3/8	1		G3™
92-920	20-3/4	15/16			3.000	0.203	3/8	1-1/8		
69-245-0	20-3/4	1	3/8 x 1/2	1-7/16	2.5	0.149	0	1		G3™
69-256-0	20-3/4	1	3/8 x 1/2	1-7/16	2.25	0.149	5/8	5/8		
69-261-0	20-3/4	1	3/8 x 1/2	1-7/16	2.25	0.149	0	5/8		
69-266-0	20-3/4	1	3/8 x 1/2	1-7/16	2.5	0.149	5/8	1		G3™
90-145	20-3/4	3/8	3/8 x 1-3/8	2-1/2	2.25	0.149	1/8	5/8		
96-811	20-3/4	3/8	7/16	1-15/16	2.75	0.134	3/8	3/4		G3™
392-013	20-13/16	1/2			3	0.250	0	1		G6®
90-651	20-13/16	13/16	3/8	3-7/16	2.25	0.187	0	3/4		G3™
91-291	20-13/16	13/16	3/8	3-7/16	2.25	0.149	0	5/8		
91-444	20-13/16	13/16	3/8	3-7/16	2.25	0.149	3/16	1-1/16		
92-013	20-13/16	1/2			2.5	0.250	0	1		
94-051	20-13/16	7/16	3/8	2-1/2	2.25	0.149	7/16	7/8		
396-730	20-7/8	7/8			3	0.250	1/2	1		G6®
596-730	20-7/8	7/8			3	0.203	1/2	1		G5™
90-621	20-7/8	3/8	3/8 x 1-3/8	2-1/2	2.25	0.149	1/4	5/8		
91-078	20-7/8	7/8			2.5	0.312	7/16	7/8		
91-443	20-7/8	7/8	3/8	3-11/16	2.75	0.134	3/8	1		
91-516	20-7/8	13/16	3/8	3-7/16	2.25	0.120	1	11/16		
91-587	20-7/8	7/8			2.5	0.250	3/8	1		
92-102	20-7/8	1-1/4	9/16	3-1/2	2.75	0.134	9/16	0		
92-113	20-7/8	7/8			3	0.250	1/2	1-1/4		
96-660	20-7/8	7/16	3/8	2-1/2	2.25	0.134	7/16	1		G3™
97-110	20-7/8	3/8	5/16 x 1/2	2-5/16	2.25	0.149	3/8	3/4		
91-080	20-15/16	15/16			2.750	0.203	9/16	1-7/16		
392-138	20-15/16	5/8			3	0.250	5/16	1		G6®
396-703	20-15/16	5/8			3	0.250	5/8	1		G6®
596-627	20-15/16	1			3	0.203	3/4	1		G5™
90-208	20-15/16	5/8			3	0.250	5/8	1		
91-127	20-15/16	1/2			2.5	0.203	5/16	3/4		

OREGON®	Length	Center Hole	Outer Hole	Center to Center	Width	Thickness	Offset	Air Lift	L-Cut	Type
91-128	20-15/16	1/2			2.5	0.203	5/16	1-1/4		
91-457	20-15/16	1			2.5	0.203	3/4	1-3/16		
91-584	20-15/16	1	1/2	5	2.5	0.250	7/16	1		
92-011	20-15/16	5/8	1/2	2-9/16	3	0.120	11/16	7/8		
92-138	20-15/16	5/8			2.5	0.203	5/16	1-1/4		
92-172	20-15/16	1			2.5	0.250	3/4	15/16		
92-173	20-15/16	1			2.5	0.312	11/16	11/16		
94-127	20-15/16	7/16	3/8	2-7/16	2.25	0.134	5/16	7/8		
94-770	20-15/16	7/16	3/8	2-7/16	2.25	0.134	3/8	7/8		
96-600	20-15/16	7/16	3/8	2-7/16	2.25	0.134	5/16	3/4		G3™
98-002	20-15/16	13/16	3/8	2-1/2	2.25	0.134	1/4	13/16		
98-007	20-15/16	13/16	3/8	2-1/2	2.25	0.134	5/16	15/16		
98-102	20-15/16	13/16	3/8	2-1/2	2.5	0.134	5/16	3/4		G3™
99-615	20-15/16	1/2			2.5	0.203	5/16	3/4		G3™
92-166	20-15/16	5/8			2.500	0.203	5/16	1		
92-181	20-15/16	5/8			2.500	0.203	5/16	1		
95-096	21	5/8			3.000	0.250	0	1-1/2		
91-518	21	7/8	7/16	3-1/16	4.750	0.120	1	7/8	7/16	
91-519	21	1-1/4	3/8	3-1/2	2.500	0.120	1/2	0	3/8	
95-083	21	5/8	3/8	1-7/8	2.250	0.149	9/16	1-5/16	3/8	
95-089	21	5/8	3/8	1-7/8	2.250	0.134	9/16	1-5/16	3/8	
95-093	21	5/8 5 pt. star	3/8	1-7/8	2.250	0.149	7/16	1	3/8	
195-005	21	5 pt. star	5/16	3-1/8	2.25	0.134	1/8	7/8		
195-019	21	5 pt. star	5/16	3-1/8	2.25	0.149	1/8	15/16		
195-032	21	5 pt. star	5/16	3-1/8	2.25	0.149	1/8	1-1/16		
195-039	21	5 pt. star	5/16	3-1/8	2.25	0.187	1/8	1-1/18		
195-048	21	5 pt. star	5/16	3-1/8	2.25	0.187	0	3/4		
195-067	21	5/8	3/8	1-7/8	2.25	0.134	9/16	1-1/16		
198-049	21	bow-tie	5/16	2-1/2	2.25	0.134	1/4	15/16		
396-629	21	1/2			3	0.250	0	1		G6®
396-702	21	5/8			3	0.250	1/2	1		G6®
396-712	21	1/2			3	0.250	5/16	1		G6®
396-727	21	5/8			3	0.250	0	1		G6®
592-608	21	9/16			3	0.203	0	1		G5™
595-621	21	5/8	3/8	1-7/8	3	0.149	1/2	1		G5™
595-622	21	1-1/4	3/8	3-7/16	3	0.134	1/2	1		G5™
595-623	21	5 pt. star			3	0.164	3/8	1		G5™
596-300	21	3/4			3	0.203	1/2	1		G5™
596-346	21	1/2			3	0.203	5/16	1		G5™
596-347	21	5/8			3	0.203	0	1		G5™
596-629	21	1/2			3	0.203	0	1		G5™
596-702	21	5/8			3	0.203	1/2	1		G5™
596-900	21	5 pt. star			3	0.164	0	1		G5™
598-631	21	bow-tie	5/16	2-1/2	3	0.149	5/16	1		G5™
91-035	21	1/2			2.5	0.250	1/4	1-1/4		
91-071	21	1/2			2.25	0.250	0	1		
91-135	21	5/8			2.5	0.203	1/2	1		
91-209	21	5/8			2.5	0.250	0	1		
91-308	21	5/8			2.5	0.203	0	1		
91-442	21	1/2			2	0.250	7/16	1-1/8		
91-482	21	9/16			2.5	0.203	0	1		
91-517	21	1-1/4	7/16	3-7/16	2.75	0.120	1/2	0		
91-531	21	1/2			2.5	0.250	5/16	1		
91-534	21	1/2			2.5	0.250	5/16	1-3/16		
91-537	21	1/2			3	0.250	5/16	1-1/4		
91-539	21	1/2			2.5	0.203	0	1		
91-547	21	1/2			2.5	0.250	5/16	3/4		
91-596	21	5/8			2.5	0.203	0	1		

Blades by Length

OREGON	Length	Center Hole	Outer Hole	Center to Center	Width	Thickness	Offset	Air Lift	L-Cut	Type
91-626	21	5/8			2.5	0.203	0	1		
91-628	21	5/8			3	0.203	0	1-1/2		
91-638	21	5/8			2.5	0.203	0	1		
92-134	21	1/2			2.5	0.250	0	1-1/4		
93-008	21	5/8	1/4	1-5/8	2.5	0.250	0	1-3/16		
93-011	21	5/8			2.5	0.250	1/2	1-1/8		
93-013	21	5/8			2.5	0.250	1/2	5/8		
94-017	21	7/16	3/8	2-7/16	2.25	0.134	5/16	7/8		
94-079	21	1/2			2.5	0.250	1/2	15/16		
95-057	21	5/8	3/8	1-7/8	2.75	0.134	1/2	1-9/16		
95-071	21	5/8	3/8	1-7/8	2.75	0.134	1/2	1-1/8		
95-078	21	5/8			2.5	0.250	0	1		
95-086	21	5 pt. star			2.5	0.203	0	1.000		
95-621	21	5/8	3/8	1-7/8	2.5	0.187	1/2	3/4		G3™
96-300	21	3/4			3	0.203	1/2	1		G3™
96-346	21	1/2			2.5	0.203	5/16	1		G3™
96-347	21	5/8			2.5	0.203	0	3/4		G3™
96-702	21	5/8			2.5	0.203	1/2	1		G3™
96-900	21	5 pt. star			2.5	0.187	0	3/4		G3™
98-071	21	3/4			3	0.203	1/2	1-5/16		
98-098	21	bow-tie	5/16	2-1/2	2.25	0.134	1/4	13/16		
98-631	21	bow-tie	5/16	2-1/2	2.5	0.187	5/16	3/4		G3™
99-502	21	5/8			3	0.203	0	1-3/16		
95-623	21	5/8 5 pt. star			2.500	0.164	3/8	1-7/8		
591-635	21-1/8	3/4	5/16	2-1/2	3	0.164	5/16	1		G5™
91-058	21-1/8	3/4	5/16	2-1/2	2.75	0.187	1/4	1-3/8		
91-635	21-1/8	3/4	5/16	2-1/2	2.5	0.187	1/4	3/4		G3™
98-088	21-1/8	5/8 6 pt. star			3	0.164	3/8	1-5/16		
98-090	21-1/8	5/8 6 pt. star			2.75	0.187	1/4	1-3/8		
98-118	21-3/16	5/8	5/16	2-1/2	3.000	0.138	7/16	1-1/8	5/16	
98-112	21-3/16	5/8	5/16	2-1/2	2.750	0.138	7/16	1-1/8	5/16	
198-059	21-3/16	5/8 6 pt. star			2.75	0.149	3/8	1-1/2		
198-153	21-3/16	5/8 6 pt. star			3	0.149	5/16	1-1/4		
391-605	21-3/16	13/16			3	0.250	7/16	1		G6®
391-610	21-3/16	1			3	0.250	7/16	1		G6®
598-600	21-3/16	3/8	5/16	2-1/2	3	0.149	5/16	1		G5™
598-629	21-3/16	5/8 6 pt. star			3	0.164	5/16	1		G5™
91-605	21-3/16	13/16			2.25	0.149	7/16	13/16		
91-610	21-3/16	1			2.25	0.149	7/16	1		
96-350	21-3/16	3/4	5/16	2-1/2	2.5	0.203	3/8	1		G3™
98-093	21-3/16	5/8 6 pt. star			2.75	0.149	3/8	7/8		
98-153	21-3/16	5/8 6 pt. star			3	0.149	5/16	15/16		
98-499	21-3/16	3/8	5/16	2-1/2	3	0.149	5/16	1-1/4		
98-600	21-3/16	3/8	5/16	2-1/2	2.5	0.187	5/16	3/4		G3™
98-629	21-3/16	5/8 6 pt. star			2.5	0.187	5/16	3/4		G3™
98-067	21-1/4	5/8 5 pt. star			2.500	0.164	9-16	1-3/16		
98-099	21-1/4	5/8	3/8	3	2.500	0.138	7/16	1-1/8	3/8	
197-019	21-1/4	7/8	3/8	3-9/16	2.25	0.134	3/8	1		
597-601	21-1/4	7/8			3	0.164	3/8	1		G5™
91-332	21-1/4	3/4	5/16	2-1/2	3	0.203	3/8	15/16		
92-101	21-1/4	3/4	3/8	3-1/2	3.25	0.120	1-5/16	1		
97-008	21-1/4	7/8			2.25	0.149	3/8	1-1/8		
97-013	21-1/4	7/8			2.25	0.187	3/8	1-1/8		
97-014	21-1/4	7/8			2.25	0.149	7/16	13/16		
97-020	21-1/4	7/8			2.25	0.134	7/16	1		
97-601	21-1/4	7/8			2.5	0.187	3/8	3/4		G3™
391-607	21-5/16	13/16			3	0.250	0	1		G6®
91-607	21-5/16	13/16			2.25	0.149	0	5/8		

OREGON®	Length	Center Hole	Outer Hole	Center to Center	Width	Thickness	Offset	Air Lift	L-Cut	Type
97-005	21-5/16	13/16			2.75	0.134	5/16	13/16		
592-615	21-3/8	7 pt. star			3	0.203	3/8	1		G5™
92-110	21-3/8	7 pt. star			2.75	0.203	3/8	1-5/16		
92-119	21-3/8	13/16			2.75	0.187	7/8	1-1/4		
92-615	21-3/8	7 pt. star			2.5	0.203	1/4	3/4		G3™
92-676	21-3/8	11/16	3/8	3-11/16	2.5	0.187	3/8	1		G3™
192-106	21-7/16	7 pt. star			2.75	0.164	7/16	7/8		
91-446	21-7/16	13/16			2.5	0.203	13/16	1-1/4		
91-449	21-7/16	11/16			2.5	0.164	7/16	1-1/16		
91-604	21-7/16	13/16			2.5	0.203	13/16	3/4		G3™
96-340	21-7/16	11/16			2.5	0.203	7/16	1		G3™
94-019	21-1/2	1/2			2.5	0.187	3/16	11/16		
94-621	21-1/2	1/2			2.5	0.203	3/16	3/4		G3™
92-184	21-9/16	11/16			2.500	0.250	9-16	1-1/8		
391-612	21-9/16	11/16			3	0.250	5/8	1		G6®
394-129	21-9/16	5/8			3	0.250	5/16	1		G6®
94-068	21-9/16	5/8			2.25	0.164	9/16	13/16		
94-069	21-9/16	5/8			2.25	0.164	5/8	1-1/4		
96-362	21-9/16	5/8			2.25	0.187	5/8	3/4		G3™
596-771	21-5/8	13/16			3	0.203	1/2	1		G5™
90-309	21-5/8	13/16			2.5	0.250	1/2	1-1/4		
91-590	21-5/8	13/16			3	0.250	7/16	1-5/16		
97-026	21-5/8	3/8			2.25	0.134	7/16	13/16	L	
99-134	21-5/8	3/8	3/8	1-7/8	2.25	0.134	1/4	1-1/8		
396-771	21-9/16	13/16			3	0.250	1/2	1		G6®
596-362	21-9/16	5/8			3	0.187	5/8	1		G5™
191-139	21-11/16	11/16	3/8	3-11/16	2.52	0.164	7/16	1		
94-045	21-11/16	1/2			2.5	0.250	1/2	1		
94-322	21-11/16	7/16	3/8	2-1/2	2.25	0.149	7/16	13/16		
96-012	21-11/16	3/8			4	0.134	0	1-5/16		
96-607	21-11/16	7/16	3/8	2-1/2	2.25	0.149	7/16	3/4		G3™
96-708	21-11/16	1/2			2.5	0.250	1/2	1		G3™
195-021	21-3/4	5/8	3/8	1-7/8	2.25	0.134	1/2	15/16		
595-602	21-3/4	5/8	3/8	1-7/8	3	0.149	1/2	1		G5™
69-246-0	21-3/4	1	3/8 x 1/2	1-7/16	2.5	0.149	0	1		G3™
69-257-0	21-3/4	1	3/8 x 1/2	1-7/16	2.25	0.149	5/8	5/8		
69-262-0	21-3/4	1	3/8 x 1/2	1-7/16	2.25	0.149	0	5/8		
69-267-0	21-3/4	1	3/8 x 1/2	1-7/16	2.5	0.149	5/8	1		G3™
90-146	21-3/4	3/8	3/8 x 1-3/8	2-1/2	2.25	0.149	1/8	5/8		
95-023	21-3/4	5/8	3/8	1-7/8	2.5	0.149	9/16	7/8		
95-042	21-3/4	5/8	3/8	1-7/8	2.5	0.149	7/16	15/16		
95-073	21-3/4	5/8	3/8	1-7/8	2.25	0.134	9/16	1-3/16		
95-602	21-3/4	5/8	3/8	1-7/8	2.5	0.187	1/2	3/4		G3™
97-001	21-13/16	3/8			2.25	0.149	3/8	1-5/16		
396-710	21-7/8	7/8			3	0.250	3/8	1		G6®
596-722	21-7/8	7/8			3	0.203	3/8	1		G5™
90-622	21-7/8	3/8	3/8 x 1-3/8	2-1/2	2.25	0.149	1/4	5/8		
92-120	21-7/8	7/8			2.5	0.312	3/8	7/8		
97-015	21-7/8	3/8			2.25	0.134	3/8	11/16		
92-602	21-15/16	3/4			2.5	0.203	1/2	3/4		G3™
95-076	21-15/16	5 pt. star			2.25	0.134	9/16	13/16		
95-615	21-15/16	5 pt. star			2.25	0.134	9/16	3/4		G3™
98-005	21-15/16	13/16	3/8	2-1/2	2.25	0.134	5/16	1-1/8		
98-050	21-15/16	bow-tie	5/16	2-1/2	2.25	0.134	5/16	13/16		
98-051	21-15/16	bow-tie	5/16	2-1/2	2.25	0.134	1/4	15/16		
92-922	22	7/8	1/4	3	2.750	0.164	1 1/16	13/16	1/4	
92-921	22	7/8	1/4	3	2.750	0.164	1 1/16	13/16	1/4	
98-095	22	5/8 5 pt. star			3.148	0.149	1/4	1-1/2		

Blades by Length

OREGON	Length	Center Hole	Outer Hole	Center to Center	Width	Thickness	Offset	Air Lift	L-Cut	Type
394-075	22	1/2			3	0.250	1/2	1		G6®
591-611	22	3/8	3/8	2-3/4	3	0.134	5/16	1		G5™
91-051	22	3/8	3/8	3	2.25	0.187	1/2	13/16		
91-611	22	3/8	3/8	2-3/4	2.25	0.164	3/16	1-1/4		
91-912	22	5/8	3/16	3	2.75	0.203	1-1/16	3/4	L	
91-913	22	5/8	3/16	3	2.75	0.203	1-1/16	3/4		
94-075	22	1/2			2.5	0.250	1/2	15/16		
94-076	22	1/2			2.5	0.250	1/2	1		
94-077	22	1/2			2.5	0.187	7/16	1		
96-075	22	1/2			2.5	0.187	1/2	3/4		G3™
391-598	22-3/16	1/2			3	0.250	0	1		G6®
396-798	22-3/16	7/16	3/8	1-9/16	3	0.250	0	1		G6®
91-598	22-3/16	1/2			2.5	0.250	0	1		
91-701	22-1/4	3/4	3/8	2-9/16	2	0.203	0	1-1/16		
96-654	22-1/4	3/4	3/8	2-9/16	2.5	0.203	0	3/4		G3™
391-591	22-5/16	1/2			3	0.250	1/2	1		G6®
91-591	22-5/16	1/2			2.5	0.250	1/8	1-1/8		
92-014	22-3/8	1/2			2.5	0.250	1/2	5/8		
392-677	22-1/2	3/8	3/8	3	3	0.250	0	1		G6®
396-808	22-1/2	5/8			3	0.250	5/16	1		G6®
596-601	22-1/2	5/8			3	0.203	0	1		G5™
92-045	22-1/2	5/8			3	0.203	0	1-1/16		
92-152	22-1/2	5/8			2.5	0.250	5/16	1-1/8		
392-203	22-11/16	15/16			3	0.250	3/8	1		G6®
492-732	22-11/16	15/16			3	0.203	3/8	1-1/16		
195-070	22-7/8	5 pt. star	5/16	3-15/16	2.75	0.164	5/16	1-1/8		
596-370	22-7/8	5 pt. star			3	0.187	5/16	1		G5™
95-074	22-7/8	5 pt. star			2.25	0.149	1/8	15/16		
95-370	22-7/8	5 pt. star			2.5	0.203	5/16	1-1/4		
96-370	22-7/8	5 pt. star			2.75	0.187	1/4	3/4		G3™
94-121	23	1	9/16	6-1/2	2.500	0.312	11/16	3/4	9/16	
91-363	23	1/2	7/16	2-7/8	2.5	0.250	0	11/16	L	
91-364	23	1/2	7/16	2-7/8	2.5	0.250	0	11/16		
96-696	23	1/2	3/8	2-7/8	2.5	0.250	0	1	L	G3™
96-795	23	1/2	3/8	2-7/8	2.5	0.250	0	1		G3™
96-401	23-1/4	5/8 6 pt. star			3	0.149	1/4	1		G3™
98-096	23-1/4	5/8 6 pt. star			3.75	0.149	1/4	1-3/8		
396-524	23-5/16	5/8			3	0.250	0	1		G6®
91-528	23-5/16	5/8			2.5	0.250	5/16	1-3/16		
92-415	23-3/4	1			2.5	0.203	0	1		
96-415	23-3/4	1			2.5	0.187	0	3/4		G3™
98-111	23-13/16	5/8	5/16	2-1/2	2.250	0.122	7/16	7/8	5/16	
92-739	23-7/8	5/8			3	0.203	0	1-1/16		
96-215	23-7/8	5/8			2.5	0.203	0	3/4	L	G3™
96-216	23-7/8	5/8			2.5	0.203	0	3/4		G3™
94-122	24	1	9/16	6-1/2	2.500	0.312	11/16	3/4	9/16	
396-752	24-1/16	5/8			3	0.250	0	1		G6®
596-752	24-1/16	5/8			3	0.203	0	1		G5™
91-453	24-1/16	1/2			2	0.250	1/2	7/8	L	
91-507	24-1/16	5/8			2.5	0.250	0	1-1/8		
91-515	24-1/16	5/8			3	0.250	0	1-1/8		
91-142	24-1/8	3/4			2.5	0.250	3/4	1-1/8		
396-707	24-3/16	3/4			3	0.250	3/4	1		G6®
91-374	24-3/8	5/8			3	0.203	0	1-1/4		
96-699	24-3/8	5/8			3	0.203	0	3/4		G3™
92-911	24-7/16	15/16			3.000	0.203	0	1-1/8		G3™
92-918	24-7/16	15/16			3.000	0.203	0	1-1/8		G3™
91-764	24-7/16	1			2.5	0.203	3/4	1-3/16	L	

OREGON	Length	Center Hole	Outer Hole	Center to Center	Width	Thickness	Offset	Air Lift	L-Cut	Type
92-033	24-7/16	15/16			3	0.203	0	1-1/4		
94-131	24-1/2	5/8			2.500	0.250	0	1-1/8		
94-134	24-1/2	5/8			2.500	0.250	0	1		
94-136	24-1/2	5/8			2.500	0.250	0	11/16		
92-917	24-1/2	15/16			3.000	0.203	0	5/8		
92-742	24-1/2	5/8			3.000	0.203	0	1-1/16		
392-057	24-1/2	15/16			3	0.250	0	1		G6®
393-026	24-1/2	5/8			3	0.250	7/16	1		G6®
396-764	24-1/2	5/8			3	0.250	0	1		G6®
396-814	24-1/2	1-1/8			3	0.250	5/8	1		G6®
592-033	24-1/2	15/16			3	0.203	0	1		G5™
596-341	24-1/2	5/8			3	0.203	0	1		G5™
596-717	24-1/2	1-1/8			3	0.203	5/8	1		G5™
91-207	24-1/2	7/8			3	0.250	0	1		
91-254	24-1/2	5/8			2.5	0.250	3/4	1-1/16		
91-493	24-1/2	1-1/8			2.5	0.250	9/16	7/8		
91-627	24-1/2	5/8			2.5	0.203	0	1		
92-035	24-1/2	5/8			3	0.250	0	1-3/16		
92-057	24-1/2	15/16			3	0.203	0	1		
92-084	24-1/2	15/16			3	0.203	0	1-3/16		
92-116	24-1/2	1-1/8			2.5	0.250	5/8	1-3/16		
94-071	24-1/2	1/2			2.5	0.250	0	3/4		G3™
94-074	24-1/2	1/2			2.5	0.250	0	1		
96-341	24-1/2	5/8			2.5	0.203	0	3/4		G3™
96-372	24-1/2	1-1/8			2.5	0.203	9/16	3/4		G3™
92-417	24-1/2	5/8			2.500	0.250	5/16	1-1/4		
392-133	24-9/16	3/4			3	0.250	5/8	1		G6®
392-416	24-9/16	5/8			3	0.250	5/16	1		G6®
92-133	24-9/16	3/4			2.5	0.250	11/16	1-1/8		
92-416	24-9/16	5/8			2.5	0.250	5/16	3/4		
91-766	24-5/8	5/8			2.5	0.250	0	7/8		
92-910	24-11/16	15/16			3.000	0.203	3/8	1		
392-204	24-11/16	15/16			3	0.250	3/8	1		G6®
391-731	24-3/4	1/2			3	0.250	0	1		G6®
91-731	24-3/4	1/2			2.5	0.250	0	11/16		
96-724	24-3/4	1/2			2.5	0.250	1/2	1		G3™
396-728	24-7/8	1	1/2	6-1/2	3	0.250	3/4	1		G6®
91-456	24-7/8	1	1/2	6-1/2	2.5	0.250	3/4	1-1/8		
92-114	24-7/8	7/8			3	0.250	1/2	1-1/4		
96-624	24-7/8	7/8			3	0.203	13/16	3/4		G3™
92-178	25	1/2			2.500	0.203	5/16	1-1/4		
396-743	24-15/16	7/8			3	0.250	1/2	1		G6®
396-775	24-15/16	7/8			3	0.250	0	1		G6®
591-585	24-15/16	1	1/2	5	3	0.203	3/8	1		G5™
596-775	24-15/16	7/8			3	0.203	0	1		G5™
91-352	24-15/16	7/16	7/16	2-7/8	2.5	0.250	0	13/16		
91-395	24-15/16	7/8			2.5	0.312	0	1		
91-585	24-15/16	1	1/2	5	2.5	0.250	3/8	1		
92-162	24-15/16	5/8			2.5	0.203	5/16	1-1/4		
93-025	24-15/16	5/8			2.5	0.250	1/2	1-1/4		
96-602	24-15/16	3/4			2.5	0.250	1/4	1	L	G3™
95-094	25	5/8			2.500	0.250	0	1		
396-731	25	5/8			3	0.250	0	1		G6®
396-737	25	1/2			3	0.250	0	1		G6®
396-778	25	1/2			3	0.250	5/16	1		G6®
396-815	25	3/4			3	0.250	0	1		G6®
596-743	25	7/8			3	0.203	7/16	1		G5™
91-034	25	1/2			2.25	0.250	0	1		

Blades by Length

OREGON®	Length	Center Hole	Outer Hole	Center to Center	Width	Thickness	Offset	Air Lift	L-Cut	Type
91-036	25	1/2			2.5	0.250	1/4	1-1/16		
91-533	25	1/2			2.5	0.250	5/16	1		
91-544	25	1/2			2.5	0.250	5/16	3/4		
91-588	25	7/8			2.5	0.250	3/8	1		
91-609	25	5/8			2.5	0.250	0	1		
91-917	25	5/8	3/16	3	2.75	0.203	1-1/16	7/8	L	
91-918	25	5/8	3/16	3	2.75	0.203	1-1/16	7/8		
91-919	25	5/8	3/16	3	2.75	0.203	1-1/16	3/4	L	
91-920	25	5/8	3/16	3	2.75	0.203	1-1/16	3/4		
92-164	25	1/2			2.5	0.203	0	1		
92-167	25	7/8	1/4	3	2.75	0.164	1-1/16	13/16	L	
92-168	25	7/8	1/4	3	2.75	0.164	1-1/16	13/16		
92-169	25	5/8			2.5	0.203	0	1		
92-170	25	1	1/2	6-1/2	2.5	0.250	11/16	13/16		
92-171	25	1	1/2	6-1/2	2.5	0.312	11/16	11/16		
94-011	25	3/4			2.5	0.250	1/4	1-1/16	L	
96-778	25	1/2			2.5	0.250	5/16	3/4		G3™
91-047	25-3/16	1/2			2.5	0.250	1/2	15/16	L	
94-040	25-3/16	1/2			2.5	0.250	1/4	1-1/8		
94-073	25-3/16	1/2			2.5	0.250	1/2	1-1/8		
96-705	25-3/16	1/2			2.5	0.250	1/4	1		G3™
391-526	26	5/8			3	0.250	5/16	1		G6®
91-526	26	5/8			2.5	0.250	5/16	1-3/16		
96-741	26-15/16	1/2			2.5	0.250	1/2	1		G3™
91-593	27	1	9/16	6-1/2	2.500	0.312	3/4	1-3/8	9/16	
391-595	27	13/16			3	0.250	0	1		G6®
92-176	27	5/8	3/16	3	2.75	0.203	1-1/16	7/8	L	
92-177	27	5/8	3/16	3	2.75	0.203	1-1/16	7/8		
94-049	27	1/2			2.5	0.250	1/2	3/4		
94-052	27	1/2			2.5	0.250	1/2	15/16		
596-628	27-7/8	1-1/16	1/2	7-1/2	3	0.187	5/16	1		G5™
96-628	27-7/8	1-1/16	1/2	7-1/2	2.75	0.187	1/4	3/4		G3™
99-113	28	1-1/16	1/2	7-1/2	2.75	0.164	1/4	13/16		
99-114	28	1-1/16	1/2	7-1/2	2.75	0.187	1/4	13/16		
99-131	28	1-1/16	1/2	7-1/2	2.75	0.164	1/4	13/16		
392-302	28-9/16	3/4			3	0.250	5/8	1		G6®
92-302	28-9/16	3/4			2.5	0.250	11/16	1-1/8		
91-489	29	1/2	1/2	6-1/2	2.5	0.312	11/16	1		
91-399	29-9/16	11/16			2.5	0.203	7/16	1-3/8		
595-807	29-5/8	5 pt. star			3	0.149	5/16	1		G5™
99-112	29-7/8	1-1/16	1/2	7-1/2	2.75	0.187	1/4	13/16		
96-630	29-15/16	1-1/16	1/2	7-1/2	2.75	0.187	1/16	3/4		G3™
96-631	29-15/16	11/16			2.75	0.203	9/16	3/4		G3™
98-032	29-15/16	3/8	5/16	2-1/2	3	0.149	1/4	1-1/4		
97-330	30	13/16			2.75	0.149	5/8	1-1/8		
94-021	31-7/16	5/8			2.5	0.187	5/16	1-3/16		
94-123	32	1	9/16	10	2.500	0.312	13/16	3/4	9/16	
96-633	32-7/8	1-1/16	1/2	7-1/2	2.75	0.187	1/4	3/4		G3™
99-117	32-7/8	1-1/16	1/2	7-1/2	2.75	0.187	1/4	1		

Blades – Universal

Adapter Kits

OREGON	Description	Product Code
02-035	Adapter Kit for One-For-All Blades Contains adapters for 3/8", 1/2", 9/16", 5/8", 11/16", 3/4", & 13/16" center holes, plus 3/8" & 5/8" center hole blade washers	

Universal — Rolled Lift

OREGON	Length	Center	Outer	C to C	W/T	Offset	Lift	Prod. Code
90-142	17-3/4	3/8	3/8 x 1-3/8	2-1/2	2.25/.149	1/8	5/8	
90-143	18-3/4	3/8	3/8 x 1-3/8	2-1/2	2.25/.149	1/8	5/8	
90-144	19-3/4	3/8	3/8 x 1-3/8	2-1/2	2.25/.149	1/8	5/8	
90-145	20-3/4	3/8	3/8 x 1-3/8	2-1/2	2.25/.149	1/8	5/8	
90-146	21-3/4	3/8	3/8 x 1-3/8	2-1/2	2.25/.149	1/8	5/8	

Universal — Mulching Blades

OREGON	Length	Center	Outer	C to C	W/T	Offset	Lift	Prod. Code
90-618	17-7/8	3/8	3/8 x 1-3/8	2-1/2	2.25/.149	1/4	5/8	
90-619	18-7/8	3/8	3/8 x 1-3/8	2-1/2	2.25/.149	1/4	5/8	
90-620	19-7/8	3/8	3/8 x 1-3/8	2-1/2	2.25/.149	1/4	5/8	
90-621	20-7/8	3/8	3/8 x 1-3/8	2-1/2	2.25/.149	1/4	5/8	
90-622	21-7/8	3/8	3/8 x 1-3/8	2-1/2	2.25/.149	1/4	5/8	

Universal — Dethatcher / Bagger Blades

Dethatcher blades 690-617-0, 690-521-0, & 690-618-0 are supplied with Oregon® 89-801 dethatching spring and Oregon 02-035 adapter kit.

OREGON	Length	Center	Outer	C to C	W/T	Offset	Lift	Prod. Code
690-617-0	16	1	3/8 x 1-1/2	3-1/4	2.25/.149	0	1/2	
690-618-0	18	1	3/8 x 1-1/2	3-1/4	2.25/.149	0	1/2	
690-521-0	20	1	3/8 x 1-1/2	3-1/4	2.25/.149	0	1/2	

Replacement Springs for Dethatcher Blades

OREGON	Description	Product Code
89-801	Replacement dethatcher springs (2) needed for each blade	

	OREGON	OEM No.	Length	Center	Outer	C to C	W / T	Off	Lift	Prod. Code
Allis Chalmers										
(3) for 46" cut, 130, 23420	**99-132**	1737228A 1737228BZYP	**16-1/8**	3/4			2.50/.203	0	1-1/16	
Gator® G5™	**599-132**		16-1/8	3/4			3.00/.203	0	1	High-Lift Xtended Fusion® G5
(2) for 42" cut	**91-605**	1737816BM 1737816BMYP	**21-3/16**	13/16			2.25/.149	7/16	13/16	
Gator G6®	**391-605**		21-3/16	13/16			3.00/.250	7/16	1	Heavy-Duty High-Lift Xtended Fusion® G6
Ariens										
(3) for 40" cut, 915035, 915051, & 915075 Zoom 1640, 915043, 915063, 915065, 915317, & 915502 Zoom 1540, 915063 1540 Mini Zoom, 915067 Zoom 1740, 915077, 915087 (000101 –) HVZ, 915087, 915103, & 915600 Zoom 1840, & 915133 Zoom 2040	**92-040**	00173800 03498400	**13-7/8**	5/8			2.00/.203	1/8	1-1/16	Xtended
(3) for 40" cut, high-lift, 31220, 34427, 38685, 39000, & 45810, 49225, 51973, 834026, & 834030 GEM, 885005, 887020, & 887029, 915034 & 915074 ZT 1640, 915042 & 915042 ZT 1540, 915044 ZT 1740, 915076 ZT 1840, 991003 PM 100Z, 91005-000101 Pro-Master 100	**91-244**		13-7/8	5/8			2.00/.203	1/8	1-1/16	
Gator G3™	**96-040**	00272800 1600500	13-7/8	5/8			2.25/.203	0	3/4	G3
(3) for 42" cut	**92-217**	02961600	**14-1/2**	5/8			2.50/.203	5/16	1-1/8	
(3) for 42" cut	**96-808**	02961600	**14-1/2**	5/8			2.50/.203	5/16	3/4	G3
(3) for 44" cut	**94-026**		**15-1/2**	5/8			2.50/.187	5/16	3/4	
(3) for 44" cut, high-lift	**94-039**		15-1/2	5/8			2.50/.203	5/16	15/16	

GROUP CONTINUES

B

Blades - OEM Replacements

Ariens

	OREGON	OEM No.	Length	Center	Outer	C to C	W / T	Off	Lift	Prod. Code
			GROUP CONTINUES							
(3) for 44" cut, mulcher	**94-061**		15-1/2	5/8			2.50/.187	5/16	1	
Gator® G3™	**94-615**	00272900	15-1/2	5/8			2.50/.203	5/16	3/4	G3
(3) for 48" cut, Zoom	**92-153**	00450200 02982000	**16-3/16**	5/8			2.50/.250	5/16	1-1/8	
Gator G5™	**596-816**	0027300	16-3/16	5/8			3.00/.203	3/8	1	High-Lift Xtended Fusion® G5
Gator G6®	**396-809**		16-3/16	5/8			3.00/.250	3/8	1	Heavy-Duty High-Lift Xtended Fusion® G6
(3) for 48" cut, 915039 (000101 -) & 915057 (000101 -) Zoom 2048, 915057 (005000 -) & 915057 (010000 -) Zoom 2148, 915081 Zoom 2348, 915600 (000101 -) 1840, 915601 (000101 -) 2044, 915602 (000101 -) 2348, 992099 (000101 -) Zoom 2148 XL, 992142 (000101 -) Zoom 2348 XL	**91-183**	04919100	**16-1/4**	5/8			2.50/.250	0	1	
(3) for 48" cut	**91-180**		16-1/4	5/8			2.50/.187	0	1	
(3) for 48" cut	**91-313**		16-1/4	5/8			2.50/.203	0	1	
(3) for 48" cut	**99-127**	00273000 04920600	16-1/4	5/8			2.50/.203	0	1-1/16	
(3) for 48" cut, mulching	**91-368**		16-1/4	5/8			2.50/.203	0	1	Xtended
Gator® G3™	**96-310**		16-1/4	5/8			2.50/.203	0	3/4	G3
Gator G5™	**596-310**		16-1/4	5/8			3.00/.203	0	1	High-Lift Xtended Fusion® G5
Gator G6®	**396-716**		16-1/4	5/8			3.00/.250	0	1	Heavy-Duty High-Lift Xtended Fusion® G6

B

Ariens

	OREGON	OEM No.	Length	Center	Outer	C to C	W / T	Off	Lift	Prod. Code
(3) for 48" cut, 831031 GT deck	**91-003**	03027800 03027851 03027859 03123700 03123751 03123759 21085400	**16-9/16**	3/4			2.50/.203	7/16	7/8	
(3) for 48" cut	**195-062**	21547939	**16-11/16**	5 pt. Star	5/16	3-15/16	2.50/.203	0	1-1/4	Xtended — 100
(3) for 48" cut, mulching	**95-068**	21547257	16-11/16	5 pt. Star			2.50/.203	5/16	13/16	Xtended
Gator G3	**96-615**		16-11/16	5 pt. Star			2.50/.203	0	1	G3
Gator G5	**596-615**		16-11/16	5 pt. Star			3.00/.187	0	1	High-Lift Xtended Fusion® — G5
(2) for 34" cut, (3) for 50" cut, 915061 & 915316 1434 Mini Zoom, 915069 & 915071 1534 Mini Zoom, 915085 & 915135 Zoom 2350, 915087, 915087 (000101 - , HVZ), & 915103 Zoom 1840, 915105 Zoom 2150, 915107 Zoom 2450, & 915133 Zoom 2040	**91-242**	08861600 08899300	**17**	5/8			2.00/.203	5/16	1-1/8	
Gator G6	**396-805**	08866800	17	5/8			3.00/.250	5/16	1	Heavy-Duty High-Lift Xtended Fusion® — G6
(2) for 36" cut, (3) for 52" cut, high-lift, Zoom	**92-151**	00450300 03253800	**18**	5/8			2.50/.250	5/16	1-1/8	
Gator® G5™	**596-817**	00273100 04916400	18	5/8			3.00/.203	5/16	1	High-Lift Xtended Fusion® — G5
Gator G6®	**396-806**		18	5/8			3.00/.250	5/16	1	Heavy-Duty High-Lift Xtended Fusion® — G6
(3) for 54" cut, Zoom	**92-157**	02961700 70763400	**18-7/16**	5/8			2.50/.203	5/16	1-1/8	
Gator G5	**596-818**		18-7/16	5/8			3.00/.203	5/16	1	High-Lift Xtended Fusion® — G5

Blades - OEM Replacements

Ariens

	OREGON	OEM No.	Length	Center	Outer	C to C	W / T	Off	Lift	Prod. Code
(3) for 54" cut	**195-072**	21546235	**18-7/16**	5 pt. Star	5/16	3-15/16	2.75/.187	1/2	1-3/16	Xtended 100
(3) for 54" cut, mulching	**95-082**	21546848	18-7/16	5 pt. Star			2.50/.187	5/16	13/16	
Gator G3™	**95-605**		18-7/16	5 pt. Star			2.50/.187	1/2	3/4	G3
Gator G5	**595-605**		18-7/16	5 pt. Star			3.00/.164	1/2	1	High-Lift Xtended Fusion® G5
(2) for 40" cut, 1440 Sport Zoom, 1440 RER, EZR 1440, 1540, 1640, 1740, Sierra 1340G, 1340H, 1440G, 1440H, 1540H, 1640H, YT13G, YT13H, YT14G, YT15G, YT15H, YT1540, YT16H, & YT16.5H	**191-015**	03607059 03624700 03624751 03624759	**20-1/2**	3/4			2.50/.187	1/2	15/16	Xtended 100
(2) for 40" cut, high-lift, 1440 Sport Zoom, 1440 RER, EZR 1440, 1540, 1640, 1740, Sierra 1340G, 1340H, 1440G, 1440H, 1540H, 1640H, YT13G, YT13H, YT14G, YT15G, YT15H, YT1540, YT16H, & YT16.5H	**91-144**		20-1/2	3/4			3.00/.203	1/2	1-5/16	
Gator G3	**96-677**		20-1/2	3/4			3.00/.203	1/2	1	G3
(3) for 60" cut, Zoom	**92-159**	03253900 08899100 09081200 70760900	**20-1/2**	5/8			2.50/.250	5/16	1-1/8	
Gator® G5™	**596-815**		20-1/2	5/8			3.00/.203	5/16	1	High-Lift Xtended Fusion® G5
Gator G6®	**396-807**		20-1/2	5/8			3.00/.250	5/16	1	Heavy-Duty High-Lift Xtended Fusion® G6
21" cut, 911000 series zone start walk-behind	**91-005**	01120300 01128500 01137000 01137051 01137059 01182400	**20-9/16**	3/8			2.75/.134	5/16	1	
Gator G3™	**96-041**		20-9/16	3/8			2.75/.134	1/4	3/4	G3

B

Ariens

	OREGON	OEM No.	Length	Center	Outer	C to C	W / T	Off	Lift	Prod. Code
(2) for 42" cut	**195-032**	21546095	**21-1/16**	5 pt. Star			2.25/.149	1/8	1-1/16	Xtended 100
(2) for 42" cut, heavy-duty version of 195-032	**195-039**		21-1/16	5 pt. Star	5/16	3-1/8	2.25/.187	1/8	1-1/18	Xtended 100
(2) for 42" cut, sand	**195-048**		21-1/16	5 pt. Star	5/16	3-1/8	2.25/.187	0	3/4	Xtended 100
(2) for 42" cut, mulching	**195-005**		21-1/16	5 pt. Star			2.25/.134	1/8	7/8	Xtended 100
(2) for 42" cut, heavy-duty version of 195-005	**195-019**		21-1/16	5 pt. Star			2.25/.149	1/8	15/16	Xtended 100
Gator G3	**96-900**		21-1/16	5 pt. Star			2.50/.187	0	3/4	G3
Gator G5	**596-900**		21-1/16	5 pt. Star			3.00/.164	0	1	High-Lift Xtended Fusion® G5
Gator G3	**92-602**	01584500 1584500	**21-15/16**	3/4			2.50/.203	1/2	3/4	G3
(2) for 46" cut, high-lift	**195-070**	21546611	**22-7/8**	5 pt. Star	5/16	3-15/16	2.75/.164	5/16	1-1/8	Xtended 100
(2) for 46" cut, heavy-duty	**95-370**		22-7/8	5 pt. Star			2.50/.203	5/16	1-1/4	Xtended
(2) for 46" cut, mulching	**95-074**		22-7/8	5 pt. Star			2.25/.149	1/8	15/16	Xtended
Gator® G3™	**96-370**		22-7/8	5 pt. Star			2.75/.187	1/4	3/4	Xtended G3
Gator G5™	**596-370**		22-7/8	5 pt. Star			3.00/.187	5/16	1	High-Lift Xtended Fusion® G5

B

Blades - OEM Replacements

Ariens

	OREGON	OEM No.	Length	Center	Outer	C to C	W / T	Off	Lift	Prod. Code
(1) for 24" cut, walk-behind	**92-415**	04159600	**23-3/4**	1			2.50/.203	0	1	
Gator G3	**96-415**		23-3/4	1			2.50/.187	0	3/4	G3
(3) for 72" cut	**92-416**	09290500	**24-9/16**	5/8			2.50/.250	5/16	3/4	
Gator G6®	**392-416**	09254700 09290600	24-9/16	5/8			3.00/.250 Heavy-Duty High-Lift Xtended Fusion®	5/16	1	G6

AYP

(3) for 38" cut, GT180	**95-058**	106038X 121657X	**14-7/8**	5/8			2.50/.203 Xtended	0	1	
(3) for 44" cut	**95-014**	100140M 106635X 122265X 25034 532025034 532106635 532122265 917122265X	**15-3/8**	3/8			2.25/.187	0	1	
Gator® G3™	**95-607**		15-3/8	3/8			2.25/.187	0	3/4	G3
(3) for 44" cut	**95-006**	130652 532130652 917130652MS 917532130652	**15-3/8**	5 pt. Star			2.25/.149	1/8	15/16	
(3) for 44" cut, heavy-duty	**95-049**		15-3/8	5 pt. Star			2.25/.187	0	1	
(3) for 46" cut, mulching	**95-045**	145708 152443 163819 532145708 532152443 917145708 917145708CS 917145708MS	**15-1/2**	5 pt. Star			2.25/.149	1/8	1	

GROUP CONTINUES

AYP

	OREGON	OEM No.	Length	Center	Outer	C to C	W / T	Off	Lift	Prod. Code
(3) for 46" cut, high-lift mulching	**95-052**	144767 157033 159705 170698 176084 532144767 532157033 532157353 532159705 532170698	15-1/2	5 pt. Star			2.25/.149	1/8	1	
Gator G3	**95-614**		15-1/2	5 pt. Star			2.50/.187	0	3/4	G3
Gator G5™	**595-614**		15-1/2	5 pt. Star			3.00/.164	0	1	High-Lift Xtended Fusion® G5
(3) for 48" cut	**99-127**		**16-1/4**	5/8			2.50/.203	0	1-1/16	
(3) for 48" cut	**91-180**		16-1/4	5/8			2.50/.187	0	1	
(3) for 48" cut	**91-183**		16-1/4	5/8			2.50/.250	0	1	
(3) for 48" cut	**91-313**		16-1/4	5/8			2.50/.203	0	1	
(3) for 48" cut, mulcher	**91-368**		16-1/4	5/8			2.50/.203	0	1	Xtended
Gator® G3™	**96-310**	106041X 121705X	16-1/4	5/8			2.50/.203	0	3/4	G3
Gator G5™	**596-310**		16-1/4	5/8			3.00/.203	0	1	High-Lift Xtended Fusion® G5
Gator G6®	**396-716**		16-1/4	5/8			3.00/.250	0	1	Heavy-Duty High-Lift Xtended Fusion® G6

GROUP CONTINUES

B

Blades - OEM Replacements

AYP

	OREGON	OEM No.	Length	Center	Outer	C to C	W / T	Off	Lift	Prod. Code
(3) for 48" cut	**195-062**	173920 180054 512258301 532173920 532180054 539107519 575938201 575938301 917173920 917532173920 917532180054 917539107519 917577203106 954633774	**16-11/16**	5 pt. Star	5/16	3-15/16	2.50/.203	0	1-1/4	Xtended — 100
(3) for 48" cut, mulching	**95-068**	173921 532173921 917532173921 954633781	16-11/16	5 pt. Star			2.50/.203	5/16	13/16	Xtended
Gator G3	**96-615**		16-11/16	5 pt. Star			2.50/.203	0	1	G3
Gator G5	**596-615**		16-11/16	5 pt. Star			3.00/.187	0	1	High-Lift Xtended Fusion® — G5
(3) for 50" cut	**95-018**	137380 532137380 917137380MS 917137380P 917532137380	**17-3/8**	5 pt. Star			2.25/.149	1/8	15/16	
(3) for 50" cut, heavy-duty version of 95-018, high-lift for bagging	**95-050**		17-3/8	5 pt. Star			2.25/.187	0	1	
Gator® G3™	**95-609**		17-3/8	5 pt. Star			2.50/.187	0	3/4	G3
Gator G5™	**595-609**		17-3/8	5 pt. Star			3.00/.164	0	1	High-Lift Xtended Fusion® — G5
(2) for 36" cut	**95-036**	127841 138496 532127841 532138496 917532127841 917532138496	**18-3/16**	5 pt. Star			2.25/.134	1/8	1	
(2) for 36" cut, heavy-duty version of 95-036	**95-026**		18-3/16	5 pt. Star			2.25/.187	1/8	1	

GROUP CONTINUES

B

AYP

	OREGON	OEM No.	Length	Center	Outer	C to C	W / T	Off	Lift	Prod. Code
Gator G3	**95-613**		18-3/16	5 pt. Star			2.50/.187	0	3/4	G3
Gator G5	**595-613**		18-3/16	5 pt. Star			3.00/.164	0	1	High-Lift Xtended Fusion® G5
(2) for 36" cut, high-lift	**95-034**	120262X 120626X 126338X 143969 532126338 532143669 917126338X	**18-3/16**	3/8	3/8	10	2.50/.187	0	7/8	
(3) for 54" cut	**195-072**	112053 187254 187256 33954 532187254 532187256 539112053 574292401 575938401 777187256	**18-7/16**	5 pt. Star	5/16	3-15/16	2.75/.187	1/2	1-3/16	Xtended 100
		917187254 917532187254 917532187256 917539112053 917777187256								
(3) for 54" cut, mulching	**95-082**	187255 24541 532187255 575938501 917532187255	18-7/16	5 pt. Star			2.50/.187	5/16	13/16	
Gator G3 (3) for 54" cut	**95-605**		18-7/16	5 pt. Star			2.50/.187	1/2	3/4	G3
Gator® G5™	**595-605**		18-7/16	5 pt. Star			3.00/.164	1/2	1	High-Lift Xtended Fusion® G5
(2) for 38" cut, high-lift	**95-031**	121263X 143978 532121263 532143978 917121263X 917121263XMS 917532121263	**19-1/4**	3/8			2.25/.187	0	1	

B

Blades - OEM Replacements

AYP

	OREGON	OEM No.	Length	Center	Outer	C to C	W / T	Off	Lift	Prod. Code
(2) for 38" cut	**195-033**	12784 127842 138970 513897001 531307221 532127842 532138497 532138970	**19-1/4** 917127842 917138497MS 917138970 917532138497 917532138970	5 pt. Star	3/8	3-1/8	2.25/.134	1/8	1-1/16	Xtended — 100
(2) for 38" cut, heavy-duty version of 195-033	**95-038**		19-1/4	5 pt. Star			2.25/.187	1/8	1-1/16	
(2) for 38" cut, high-lift	**95-047**	131322 532131322 917131322	19-1/4	5 pt. Star			2.25/.187	0	1	
(2) for 38" cut, mulching	**195-003**	134148 134148M 134148X 138497 139744MS 139774 193957 24692 531307220 532134148 532139774 532193957	19-1/4 539110324 777193957 917134148MS 917134148X 917139774 917139774MS 917532134148 917532139774 917532193957	5 pt. Star	5/16	3-1/8	2.25/.134	1/8	7/8	Xtended — 100
(2) for 38" cut, heavy-duty version of 195-003	**95-099**		19-1/4	5 pt. Star			2.25/.149	1/8	1	
Gator® G3™	**95-601**		19-1/4	5 pt. Star			2.50/.187	0	3/4	G3
Gator G5™	**595-601**		19-1/4	5 pt. Star			3.00/.164	0	1	High-Lift Xtended Fusion® — G5
(2) for 38" cut	**95-015**	100669K 106634X 25036 91724691	**19-3/8**	3/8			2.25/.187	0	1	
20" cut, walk-behind	**95-024**	1935957 532850972 544080204 55139204 69229 701211 7133203 77193957 850972 8509725 913532193957	**19-15/16** 917145106CS 917532850972 917532850972MS 91756400 917701211MS 917701211X417 917733203 917850972	5/8	3/8	1-7/8	2.50/.149	9/16	7/8	

GROUP CONTINUES

AYP

OREGON	OEM No.	Length	Center	Outer	C to C	W / T	Off	Lift	Prod. Code
		GROUP CONTINUES							
95-041		19-15/16	5/8	3/8	1-7/8	2.50/.149	7/16	15/16	
20" cut, mulching									
595-024		19-15/16	5/8	3/8	1-7/8	3.00/.134	5/8	1	
Gator G5						High-Lift Xtended Fusion®			G5
95-051	133346 134871 145106 532129277 532133346 532134871 532145106 532700972 532751646 575164601 751646	**20** 917129277 917131694 917145106CS 917532129277 917532751646 917700972 917751646	5/8	3/8	1-7/8	2.25/.134	7/16	11/16	
20" cut, walk-behind, mulching									
95-044	204114-884 204340218 340218 531307212 532114884	20 532752233 752233 917532752233	5/8	3/8	1-7/8	2.00/.134	5/16	13/16	
20" cut, walk-behind, mulching									
195-032	127843 138498 138791 138971 531307224 532138498 532138971 917127843 917131323 917138498MS 917532138498	**21**	5 pt. Star			2.25/.149	1/8	1-1/16	
(2) for 42" cut						Xtended			100
195-039		21	5 pt. Star	5/16	3-1/8	2.25/.187	1/8	1-1/18	
(2) for 42" cut, heavy-duty version of 195-032						Xtended			100
195-048	532131323	21	5 pt. Star	5/16	3-1/8	2.25/.187	0	3/4	
(2) for 42" cut, sand						Xtended			100
195-005	134149 24676 422719 424752 531005085 531307223 532134149 532422719 532424752 539110460	21 777134149 91724676 917532422719 917532424752 917539110460 917777134149 954636867	5 pt. Star			2.25/.134	1/8	7/8	
(2) for 42" cut, mulching						Xtended			100

GROUP CONTINUES

Blades - OEM Replacements

AYP

	OREGON	OEM No.	Length	Center	Outer	C to C	W / T	Off	Lift	Prod. Code
(2) for 42" cut, heavy-duty version of 195-005	**195-019**	139775 532139775 917139775P 917532139775	21	5 pt. Star			2.25/.149	1/8	15/16	Xtended 100
(2) for 42" cut	**95-086**		21	5 pt. Star			2.50/.203	0	1.000	
Gator® G3™	**96-900**	521981601	21	5 pt. Star			2.50/.187	0	3/4	G3
Gator G5™	**596-900**		21	5 pt. Star			3.00/.164	0	1	High-Lift Xtended Fusion® G5
21" cut, walk-behind	**95-071**	159267 531307235 532159267 917532159267	**21**	5/8	3/8	1-7/8	2.75/.134	1/2	1-1/8	
21" cut, walk-behind, mulching	**195-067**	189028 531300765 532189028 539111878	21	5/8	3/8	1-7/8	2.25/.134	9/16	1-1/16	Xtended 100
21" cut, walk-behind	**95-057**	165833 175064 406706 406712 532165833 532175064 532176135 532406712 917175064	21	5/8	3/8	1-7/8	2.75/.134	1/2	1-9/16	917175064PB 917176135 917532165833 917532175064 917532176135
Gator G3	**95-621**	580258101 580258102	21	5/8	3/8	1-7/8	2.50/.187	1/2	3/4	G3
Gator G5	**595-621**		21	5/8	3/8	1-7/8	3.00/.149	1/2	1	High-Lift Xtended Fusion® G5
22" cut, walk-behind	**95-023**	406713 532406713 532850973 701213 7133219 850973 91733219 917532406713	**21-3/4**	5/8	3/8	1-7/8	2.50/.149	9/16	7/8	917532850973 91756401 917701213 917701213MS 917850973 917850973MS

GROUP CONTINUES

AYP

	OREGON	OEM No.	Length	Center	Outer	C to C	W / T	Off	Lift	Prod. Code
22" cut, walk-behind, mulching	**95-042**		21-3/4	5/8	3/8	1-7/8	2.50/.149	7/16	15/16	
22" cut, walk-behind, mulching	**195-021**	33256 133348 134768 141114 152202 157101 700973 752234 7133269 91733256 91733269	21-3/4	5/8	3/8	1-7/8	2.25/.134	1/2	15/16	Xtended — 100
		204335256 531301252 531307214 531307236 531307237 532134768 532141114 532152202 532752234			575157101 917157101 917752234 917532134768 917532141114 917532752234					
Used on PR6252SH, 961240001	**95-073**	192682 406707 532192682 532406707 582931401 917192682 917192682X431 917532192682 917532406707	21-3/4	5/8	3/8	1-7/8	2.25/.134	9/16	1-3/16	
Gator® G3™	**95-602**		21-3/4	5/8	3/8	1-7/8	2.50/.187	1/2	3/4	G3
Gator G5™	**595-602**		21-3/4	5/8	3/8	1-7/8	3.00/.149	1/2	1	High-Lift Xtended Fusion® — G5
(1) for 22" cut, walk-behind mower	**95-076**	420463 421825 532420463 532421825 532437601 917532420463 917532421825	**21-15/16**	5 pt. Star			2.25/.134	9/16	13/16	
Gator G3	**95-615**	580244001 585587701	21-15/16	5 pt. Star			2.25/.134	9/16	3/4	G3
(2) for 46" cut, high-lift, YTH2546, YTH2146XP, 2246LS, 2346XLS, Poulan 19546LT.	**195-070**	405380 532405380 575937901 777405380 917532405380 917777405380	**22-7/8**	5 pt. Star	5/16	3-15/16	2.75/.164	5/16	1-1/8	Xtended — 100
(2) for 46" cut, heavy-duty	**95-370**		22-7/8	5 pt. Star			2.50/.203	5/16	1-1/4	Xtended

GROUP CONTINUES

Blades - OEM Replacements

AYP

GROUP CONTINUES

	OREGON	OEM No.	Length	Center	Outer	C to C	W / T	Off	Lift	Prod. Code
(2) for 46" cut, mulching	**95-074**	403107 531309715 532403107 917532403107	22-7/8	5 pt. Star			2.25/.149	1/8	15/16	Xtended
Gator® G3™	**96-370**		22-7/8	5 pt. Star			2.75/.187	1/4	3/4	Xtended — G3
Gator G5™	**596-370**		22-7/8	5 pt. Star			3.00/.187	5/16	1	High-Lift Xtended Fusion® — G5
Gator G5, LT2213C, LT2213CA, LZ11577, LZ1577HRB, LZ1577RB, PO12530LT, PXT12530	**595-807**	419273 419273X431 419274 532419273 532419274 777419274 917532419273 91777419274	**29-5/8**	5 pt. Star			3.00/.149	5/16	1	High-Lift Xtended Fusion® — G5

Befco

(3) for 48" cut	**92-300**	000-6795	**16-5/8**	3/4			2.50/.250	11/16	1-1/8	
Gator G6®	**392-300**		16-5/8	3/4			3.00/.250	5/8	1	Heavy-Duty High-Lift Xtended Fusion® — G6
(3) for 60" cut	**92-301**	000-6641	**20-3/16**	3/4			2.50/.250	11/16	1-1/8	
Gator G6	**392-301**		20-3/16	3/4			3.00/.250	5/8	1	Heavy-Duty High-Lift Xtended Fusion® — G6
(3) for 72" cut, Cyclone, 112-EZF, 115-EZF, 212, 215, 217, 312, 315, 317-FLX, 412, 415, 417-SFL, 716	**92-133**	000-6845	**24-9/16**	3/4			2.50/.250	11/16	1-1/8	
Gator G6	**392-133**		24-9/16	3/4			3.00/.250	5/8	1	Heavy-Duty High-Lift Xtended Fusion® — G6
(3) for 84" cut	**92-302**	000-6690	**28-9/16**	3/4			2.50/.250	11/16	1-1/8	
Gator G6	**392-302**	000-6690	28-9/16	3/4			3.00/.250	5/8	1	Heavy-Duty High-Lift Xtended Fusion® — G6

B

Better Outdoors

	OREGON	OEM No.	Length	Center	Outer	C to C	W / T	Off	Lift	Prod. Code
(3) for 44" cut	**91-369**	10480-S	**15-1/4**	5/8			2.50/.203	0	1	
							Xtended			
(3) for 44" cut, mulching	**91-373**		15-1/4	5/8			2.50/.203	0	1	
							Xtended			
Gator® G3™	**96-327**		15-1/4	5/8			2.50/.203	0	1	
							Xtended			G3
Gator G5™	**596-327**		15-1/4	5/8			3.00/.203	0	1	
							High-Lift Xtended Fusion®			G5
(2) for 32" cut	**91-313**	10661-S	**16-1/4**	5/8			2.50/.203	0	1	
(2) for 32" cut	**91-180**		16-1/4	5/8			2.50/.187	0	1	
(2) for 32" cut, heavy-duty	**91-183**		16-1/4	5/8			2.50/.250	0	1	
(2) for 32" cut	**99-127**		16-1/4	5/8			2.50/.203	0	1-1/16	
(2) for 32" cut, mulching	**91-368**		16-1/4	5/8			2.50/.203	0	1	
							Xtended			
Gator G3	**96-310**	ACC-0022	16-1/4	5/8			2.50/.203	0	3/4	
										G3
Gator G5	**596-310**		16-1/4	5/8			3.00/.203	0	1	
							High-Lift Xtended Fusion®			G5
Gator G6®	**396-716**		16-1/4	5/8			3.00/.250	0	1	
							Heavy-Duty High-Lift Xtended Fusion®			G6

B

Blades - OEM Replacements

	OREGON	OEM No.	Length	Center	Outer	C to C	W / T	Off	Lift	Prod. Code
Big Bee										
(3) for 60" cut, left-hand cut	**91-046**	A-19B20 FM04-2A	**20-3/16**	1/2			2.50/.250	1/2	15/16	
(3) for 72" cut, left-hand cut	**91-047**	A-19B25 FM04-3A	**25-3/16**	1/2			2.50/.250	1/2	15/16	
Bobcat										
(2) for 32" cut, (3) for 48" cut	**93-005**	03239 32061 3239 WM132061 WMTA3206 WMTA32061	**16-1/4**	5/8	1/4	1-5/8	2.50/.250	0	1-3/16	
(2) for 32" cut, (3) for 48" cut	**91-313**		16-1/4	5/8			2.50/.203	0	1	
(2) for 32" cut, (3) for 48" cut	**91-180**		16-1/4	5/8			2.50/.187	0	1	
(2) for 32" cut, (3) for 48" cut	**99-127**		16-1/4	5/8			2.50/.203	0	1-1/16	
(2) for 32" cut, (3) for 48" cut, mulching	**91-368**		16-1/4	5/8			2.50/.203	0	1	Xtended
Gator® G3™	**96-310**		16-1/4	5/8			2.50/.203	0	3/4	
Gator G5™	**596-310**		16-1/4	5/8			3.00/.203	0	1	High-Lift Xtended Fusion® G5
Gator G6®	**396-716**		16-1/4	5/8			3.00/.250	0	1	Heavy-Duty High-Lift Xtended Fusion® G6

GROUP CONTINUES

Bobcat

	OREGON	OEM No.	Length	Center	Outer	C to C	W / T	Off	Lift	Prod. Code
			GROUP CONTINUES							
	93-009	112111-01	16-1/4	5/8			2.50/.203	1/2	1-1/8	
(2) for 32" cut, (3) for 48" cut, high-lift use on XM series										
	593-600		16-1/4	5/8			3.00/.203	1/2	1	
							High-Lift Xtended Fusion®			G5
Gator G5										
	93-006	32022 32022A 32022HD WM132022	**18**	5/8	1/4	1-5/8	2.50/.250	0	1-3/16	
							Xtended			
(2) for 36" cut, (3) for 54" cut, heavy-duty										
	91-622		18	5/8			2.50/.203	0	1	
							Xtended			
(2) for 36" cut, (3) for 54" cut										
	91-623		18	5/8			3.00/.203	0	1-1/2	
							Xtended			
(2) for 36" cut, (3) for 54" cut, high-lift										
	91-235		18	5/8			2.50/.250	0	7/8	
							Xtended			
(2) for 36" cut, (3) for 54" cut, low-lift										
	91-181		18	5/8			2.50/.187	0	1	
							Xtended			
(2) for 36" cut, (3) for 54" cut										
	91-184		18	5/8			2.50/.250	0	1	
							Xtended			
(2) for 36" cut, (3) for 54" cut										
	91-256		18	5/8			2.50/.203	0	1	
							Xtended			
(2) for 36" cut, (3) for 54" cut										
	91-312		18	5/8			2.50/.203	0	1	
							Xtended			
(2) for 36" cut, (3) for 54" cut										
			GROUP CONTINUES							

B

Blades - OEM Replacements

Bobcat

	OREGON	OEM No.	Length	Center	Outer	C to C	W / T	Off	Lift	Prod. Code
			GROUP CONTINUES							
(2) for 36" cut, (3) for 54" cut	**91-637**		18	5/8			2.50/.203	0	1	
(2) for 36" cut, (3) for 54" cut	**94-053**		18	5/8			2.50/.250	0	1	
(2) for 36" cut, (3) for 54" cut, mulching	**91-335**		18	5/8			2.50/.203	0	1	Xtended
(2) for 36" cut, (3) for 54" cut, mulching	**91-218**		18	5/8			2.50/.164	0	1	Xtended
Gator® G3™	**96-344**		18	5/8			2.50/.203	0	3/4	G3
Gator G5™	**596-344**		18	5/8			3.00/.203	0	1	High-Lift Xtended Fusion® G5
Gator G6®	**396-726**		18	5/8			3.00/.250	0	1	Heavy-Duty High-Lift Xtended Fusion® G6
(2) for 36" cut, high-lift, use on XM series	**93-010**	112111-02	**18**	5/8			2.50/.203	1/2	1-1/8	Xtended
(3) for 52" cut, (2) for 36" cut, use on XM series	**91-039**		18	5/8			2.50/.203	1/2	1	
Gator G3	**93-601**	272254302	18	5/8			2.50/.203	1/2	3/4	G3
Gator G5	**593-601**		18	5/8			3.00/.203	1/2	1	High-Lift Xtended Fusion® G5
Gator G6	**393-601**		18	5/8			3.00/.250	1/2	1	Heavy-Duty High-Lift Xtended Fusion® G6
(3) for 61" cut	**93-008**	42180B WM142180B	**21**	5/8	1/4	1-5/8	2.50/.250	0	1-3/16	Xtended
(3) for 61" cut	**91-626**		21	5/8			2.50/.203	0	1	

GROUP CONTINUES

Bobcat

	OREGON	OEM No.	Length	Center	Outer	C to C	W / T	Off	Lift	Prod. Code
			GROUP CONTINUES							
(3) for 61" cut	91-209		21	5/8			2.50/.250	0	1	
							Xtended			
(3) for 61" cut	91-638		21	5/8			2.50/.203	0	1	
(3) for 61" cut, high-lift	91-628		21	5/8			3.00/.203	0	1-1/2	
							Xtended			
(3) for 61" cut, mulching	91-596		21	5/8			2.50/.203	0	1	
(3) for 61" cut	91-308		21	5/8			2.50/.203	0	1	
(3) for 61" cut	95-078		21	5/8			2.50/.250	0	1	
Gator® G3™	96-347		21	5/8			2.50/.203	0	3/4	G3
Gator G5™	596-347		21	5/8			3.00/.203	0	1	
							High-Lift Xtended Fusion®			G5
Gator G6®	396-727		21	5/8			3.00/.250	0	1	
							Heavy-Duty High-Lift Xtended Fusion®			G6
(3) for 61" cut, high-lift, 226ES, Fastcut, FR691V, Preditor Pro, Procut, ZT200, ZT219, ZT220, ZT223, ZT225, ZT226, ZT227, ZT228, ZT231	93-011	112111-03	**21**	5/8			2.50/.250	1/2	1-1/8	
							Xtended			
(3) for 61" cut, 226ES, Fastcut, FR691V, Preditor Pro, Procut, ZT200, ZT219, ZT220, ZT223, ZT225, ZT226, ZT227, ZT228, ZT231	93-013	112243-03	21	5/8			2.50/.250	1/2	5/8	
							Xtended			
(3) for 61" cut	91-135		21	5/8			2.50/.203	1/2	1	
Gator G3	96-702	2722453-03	21	5/8			2.50/.203	1/2	1	G3
			GROUP CONTINUES							

B

Blades - OEM Replacements

Bobcat

	OREGON	OEM No.	Length	Center	Outer	C to C	W / T	Off	Lift	Prod. Code
			GROUP CONTINUES							
Gator® G5™	**596-702**		21	5/8			3.00/.203	1/2	1	G5 (High-Lift Xtended Fusion®)
Gator G6®	**396-702**		21	5/8			3.00/.250	1/2	1	G6 (Heavy-Duty High-Lift Xtended Fusion®)
Gator G6 (3) for 72" cut	**393-026**	112111-07	**24-1/2**	5/8			3.00/.250	7/16	1	G6 (Heavy-Duty High-Lift Xtended Fusion®)
(3) for 74" cut	**93-025**	112111-04	**24-15/16**	5/8			2.50/.250	1/2	1-1/4	
(3) for 72" cut	**91-609**		**25**	5/8			2.50/.250	0	1	
Gator G6	**396-731**	42139B WM142139B	25	5/8			3.00/.250	0	1	G6 (Heavy-Duty High-Lift Xtended Fusion®)

Bolens (also see MTD)

(1) 98-061 & (2) 198-063 for 46" cut - star center hole, center blade, 3 in 1 mulching	**98-061**	742-0612 742-0612A 942-0612 942-0612A	**14-7/8**	5/8 6 pt. Star			2.50/.149	7/16	1-3/16	Xtended
(1) 98-084 & (2) 98-085 for 46" cut	**98-084**		14-7/8	5/8 6 pt. Star			2.50/.203	7/16	1-1/8	Xtended
Gator G3™	**98-637**	742-04049 742-04124-X 742-0612-X 942-04124-X 942-0612-X	14-7/8	5/8 6 pt. Star			2.50/.187	7/16	3/4	G3
(3) for 42" cut, fits models #18300, 30042 & 30042S	**91-097**	172-7926 177-2144	**15-5/16**	3/8	3/8	2-3/4	2.00/.187	0	1	
(2) 198-063 & (1) 98-061 for 46" cut - star center hole, outside blades, 3 in 1 mulching	**198-063**	742-0611 742-0611A 942-0611 942-0611A	**16-1/4**	5/8 6 pt. Star			2.50/.149	7/16	1-1/8	Xtended — 100

GROUP CONTINUES

Bolens (also see MTD)

	OREGON	OEM No.	Length	Center	Outer	C to C	W / T	Off	Lift	Prod. Code
			GROUP CONTINUES							
(2)98-085 & (1) 98-084 for 46" cut, outside blades	**98-085**		16-1/4	5/8 6 pt. Star			2.50/.203	7/16	1-1/8	Xtended
Gator® G3™	**98-640**	742-04043 742-04125-X 742-0611-X 942-04125-X	16-1/4	5/8 6 pt. Star			2.50/.187	7/16	3/4	G3
Gator G5™	**598-640**		16-1/4	5/8 6 pt. Star			3.00/.164	7/16	1	High-Lift Xtended Fusion® G5
(3) for 48" cut, fits models # 30048S, 30048E, 18336, 19211	**91-096**	173-0412 173-8571 177-2145	**16-15/16**	3/8	3/8	2-3/4	2.00/.187	0	1	
(1) for 36" cut, left-hand side, use with deluxe grass catcher	**91-714**	174-8302	**18-1/2**	3/4	3/8	2-9/16	2.50/.164	0	1-5/16	
(3) for 54" cut, 18110, 19212	**91-093**	172-2883 172-5522	**18-3/4**	3/8	3/8	2-3/4	2.00/.187	0	1	
(2) for 38" cut, star center hole, mulching, MTD 3-in-1 blade	**198-058**	742-0610 742-0610A 742-0610A-0637 942-0610 942-0610A GW-7420610 OEM-742-0610	**19-5/16**	5/8 6 pt. Star			2.75/.149	3/8	1-1/2	Xtended 100
(2) for 38" cut, use in place of our 198-058 for non-mulching	**198-052**	742-0654 942-0654	19-5/16	5/8 6 pt. Star			3.00/.149	5/16	1-1/4	Xtended 100
Gator G3	**98-628**		19-5/16	5/8 6 pt. Star			2.50/.187	5/16	3/4	G3
Gator G5	**598-628**		19-5/16	5/8 6 pt. Star			3.00/.164	5/16	1	High-Lift Xtended Fusion® G5
20" cut, walk-behind, high-lift	**98-068**	742-0640 942-0640	**20**	bow-tie	5/16	2-1/2	2.25/.134	5/16	13/16	
20" cut, walk-behind, mulcher	**98-066**	742-0740 942-0740	20	bow-tie	5/16	2-1/2	2.25/.134	5/16	1-1/8	

B

Blades - OEM Replacements

Bolens (also see MTD)

	OREGON	OEM No.	Length	Center	Outer	C to C	W / T	Off	Lift	Prod. Code
21" cut, walk-behind, mulcher	198-049	742-0741 942-0741 942-0741A	21	bow-tie	5/16	2-1/2	2.25/.134	1/4	15/16	Xtended 100
Gator® G3™	98-631		21	bow-tie	5/16	2-1/2	2.50/.187	5/16	3/4	G3
Gator G5™	598-631		21	bow-tie	5/16	2-1/2	3.00/.149	5/16	1	High-Lift Xtended Fusion® G5
(2) for 42" cut, star center hole, mulching, deep deck - 1997 & after; autodrive 1999 & after	198-059	742-0616 742-0616A 942-0616 942-0616A OEM-742-0616	21-3/16	5/8 6 pt. Star			2.75/.149	3/8	1-1/2	Xtended 100
(2) for 42" cut, star center hole, use in place of 198-059 for non-mulching	198-153		21-3/16	5/8 6 pt. Star			3.00/.149	5/16	1-1/4	Xtended 100
(2) for 42" cut, star center hole, deep deck - 1997 & after; autodrive 1999 & after	98-093		21-3/16	5/8 6 pt. Star			2.75/.149	3/8	7/8	
Gator G3	98-629		21-3/16	5/8 6 pt. Star			2.50/.187	5/16	3/4	G3
Gator G5	598-629		21-3/16	5/8 6 pt. Star			3.00/.164	5/16	1	High-Lift Xtended Fusion® G5

Bunton-Goodall

(3) for 48" cut	91-620		16-1/2	5/8			2.50/.203	0	1	Xtended
(3) for 48" cut, high-lift	91-621		16-1/2	5/8			3.00/.203	0	1-1/2	
(2) for 32" cut, (3) for 48" cut	92-145		16-1/2	5/8			2.50/.203	0	1	
Gator® G3™	96-308		16-1/2	5/8			2.50/.203	0	1	G3
Gator G5™	596-308		16-1/2	5/8			3.00/.203	0	1	High-Lift Xtended Fusion® G5

GROUP CONTINUES

Bunton-Goodall

	OREGON	OEM No.	Length	Center	Outer	C to C	W / T	Off	Lift	Prod. Code
			GROUP CONTINUES							
Gator G6® — (3) for 48" cut V series deck	**396-735**	PL4205	16-1/2	5/8			3.00/.250	0	1	Heavy-Duty High-Lift Xtended Fusion® G6
(3) for 50" cut, ZTR, high-lift	**91-505**	PL7329	**17**	5/8			2.50/.250	0	1-1/8	Xtended
(3) for 50" cut	**91-502**		17	5/8			2.50/.203	0	1-3/16	Xtended
(3) for 50" cut	**91-508**		17	5/8			2.50/.250	0	1-3/16	Xtended
Gator G3	**96-323**		17	5/8			2.50/.203	0	1	G3
Gator G5	**596-323**		17	5/8			3.00/.203	0	1	High-Lift Xtended Fusion® G5
Gator G6	**396-723**		17	5/8			3.00/.250	0	1	Heavy-Duty High-Lift Xtended Fusion® G6
(3) for 52" cut, (2) for 36" cut	**91-256**	PL4206	**18**	5/8			2.50/.203	0	1	Xtended
(3) for 52" cut, (2) for 36" cut	**91-622**		18	5/8			2.50/.203	0	1	Xtended
(3) for 52" cut, (2) for 36" cut	**91-637**		18	5/8			2.50/.203	0	1	
(3) for 52" cut, (2) for 36" cut, high-lift	**91-623**		18	5/8			3.00/.203	0	1-1/2	Xtended
Gator® G3™	**96-344**		18	5/8			2.50/.203	0	3/4	G3
Gator G5™	**596-344**		18	5/8			3.00/.203	0	1	High-Lift Xtended Fusion® G5
Gator G6®	**396-726**		18	5/8			3.00/.250	0	1	Heavy-Duty High-Lift Xtended Fusion® G6

B

Blades - OEM Replacements

Bunton-Goodall

	OREGON	OEM No.	Length	Center	Outer	C to C	W / T	Off	Lift	Prod. Code
(3) for 60" cut, ZTR, high-lift	**91-506**	PL7441	**20-1/2**	5/8			2.50/.250	0	1-3/16	
							Xtended			
(3) for 60" cut	**92-037**		20-1/2	5/8			2.50/.203	0	1-1/16	
							Xtended			
(3) for 60" cut, low-lift	**92-038**		20-1/2	5/8			2.50/.203	0	13/16	
							Xtended			
(3) for 60" cut, mulching	**91-311**		20-1/2	5/8			2.50/.203	0	1	
							Xtended			
Gator G3	**96-319**		20-1/2	5/8			2.50/.203	0	3/4	G3
Gator® G5™	**596-319**		20-1/2	5/8			3.00/.203	0	1	
							High-Lift Xtended Fusion®			G5
Gator G6®	**396-740**		20-1/2	5/8			3.00/.250	0	1	
							Heavy-Duty High-Lift Xtended Fusion®			G6

Bush Hog

	OREGON	OEM No.	Length	Center	Outer	C to C	W / T	Off	Lift	Prod. Code
(3) for 44" cut	**92-142**		**15-1/8**	1/2			2.50/.203	0	1	
Gator G6	**392-142**	50056493	15-1/8	1/2			3.00/.250	0	1	
							Heavy-Duty High-Lift Xtended Fusion®			G6
(2) for 36" cut, (3) for 52" cut, ES2052B2, ES2052H2, ES2052K2, HS1736B, HS1836B, HS2036K	**92-135**	50056498	**18**	1/2			2.50/.203	0	1	
(3) for 54" & 55" cut, CZ2355, ZT18, ZT180, ZT22, ZT22-W, ZT220, ZT230, ZT25, ZT250, ZT30-D	**92-149**	50034306 50056494	**19**	1/2			2.50/.250	0	1-1/4	
							Xtended			

B

Bush Hog

	OREGON	OEM No.	Length	Center	Outer	C to C	W / T	Off	Lift	Prod. Code
(3) for 60" cut, fits models ATH, FTH	**91-035**	88668	**21**	1/2			2.50/.250	1/4	1-1/4	Xtended
(3) for 60" cut, fits models ATH, FTH	**91-531**		21	1/2			2.50/.250	5/16	1	
(3) for 60" cut, fits models ATH, FTH	**91-534**		21	1/2			2.50/.250	5/16	1-3/16	
(3) for 60" cut, high-lift fits models ATH, FTH	**91-537**		21	1/2			3.00/.250	5/16	1-1/4	
(3) for 60" cut, low-lift fits models ATH, FTH	**91-547**		21	1/2			2.50/.250	5/16	3/4	
Gator® G3™	**96-346**		21	1/2			2.50/.203	5/16	1	G3
Gator G5™	**596-346**		21	1/2			3.00/.203	5/16	1	High-Lift Xtended Fusion® G5
Gator G6®	**396-712**		21	1/2			3.00/.250	5/16	1	Heavy-Duty High-Lift Xtended Fusion® G6
(3) for 60" & 61" cut, CZ2561, ERM, FTH, RDTH, TH, M2260, M2360, M2560, M2560K, M2261 M2361, M2561, M2561K, PZ2761KH3, PZ3061KH3	**91-071**	82324	**21**	1/2			2.25/.250	0	1	
(3) for 60" & 61" cut, CZ2561, ERM, FTH, RDTH, TH, M2260, M2360, M2560, M2560K, M2261 M2361, M2561, M2561K, PZ2761KH3, PZ3061KH3	**92-134**	50056493	21	1/2			2.50/.250	0	1-1/4	Xtended
(3) for 60" & 61" cut, mulching, CZ2561, ERM, FTH, RDTH, TH, M2260, M2360, M2560, M2560K, M2261 M2361, M2561, M2561K, PZ2761KH3, PZ3061KH3	**91-539**		21	1/2			2.50/.203	0	1	
Gator G5	**596-629**	50029159 50034299 50055707 95754	21	1/2			3.00/.203	0	1	High-Lift Xtended Fusion® G5
Gator G6	**396-629**		21	1/2			3.00/.250	0	1	Heavy-Duty High-Lift Xtended Fusion® G6

B

Blades - OEM Replacements

Bush Hog

	OREGON	OEM No.	Length	Center	Outer	C to C	W / T	Off	Lift	Prod. Code
	91-034	82325	**25**	1/2			2.25/.250	0	1	
(3) for 72" cut, fits models FTH, PX2873, PZ3073, RDTH, TH, ZT18, ZT180, ZT22, ZT22-W, ZT220, ZT220-W, ZT230, ZT25, ZT250, ZT30D										
	92-164		25	1/2			2.50/.203	0	1	
(2) for 48", (3) for 72" cut, mulching, fits models ATH, FTH										
	396-737	50029160 50034300 50034307 50056495 95755	25	1/2			3.00/.250	0	1	
Gator G6®							Heavy-Duty High-Lift Xtended Fusion®			G6
	91-036	88773	**25**	1/2			2.50/.250	1/4	1-1/16	
(2) for 48", (3) for 72" cut, fits models ATH, FTH							Xtended			
	91-544		25	1/2			2.50/.250	5/16	3/4	
(2) for 48", (3) for 72" cut, low-lift, fits models ATH, FTH										
	91-533		25	1/2			2.50/.250	5/16	1	
(2) for 48", (3) for 72" cut, high-lift, fits models ATH, FTH										
	96-778		25	1/2			2.50/.250	5/16	3/4	
Gator G3™										G3
	396-778		25	1/2			3.00/.250	5/16	1	
Gator G6							Heavy-Duty High-Lift Xtended Fusion®			G6
	91-489	50033779	**29**	1/2	1/2	6-1/2	2.50/.312	11/16	1	
(3) for 84" cut, RDTH 84							Xtended			

Caroni

	96-603	48007700	**16-11/16**	3/4			2.50/.203	11/16	3/4	
Gator G3										G3
	91-141	59006200	**20-1/4**	3/4			2.00/.250	5/8	15/16	
(3) for 59" cut, model TC590N										
	96-605		20-1/4	3/4			2.50/.203	5/8	3/4	
Gator G3										G3

B

Caroni

	OREGON	OEM No.	Length	Center	Outer	C to C	W / T	Off	Lift	Prod. Code
	91-142	71001000	**24-1/8**	3/4			2.50/.250	3/4	1-1/8	
(3) for 71" cut, model TC710N										
	396-707		24-1/8	3/4			3.00/.250	3/4	1	
Gator® G6®							Heavy-Duty High-Lift Xtended Fusion®			G6

Country Clipper

	92-150	H1715	**15**	1/2			2.50/.203	5/16	1-1/4	
(3) for 42" cut, high-lift, JaZee I, JaZee										
	91-557	H1665	15	1/2			2.50/.250	5/16	3/4	
(3) for 42" cut, low-lift, JaZee I, JaZee										
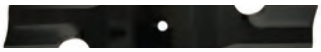	**91-536**		15	1/2			2.50/.250	5/16	1	
(3) for 42" cut, JaZee I, JaZee										
	96-343	H2013	15	1/2			2.50/.203	5/16	1	
Gator G3™							Xtended			G3
	91-123	H1714	**16-15/16**	1/2			2.50/.203	5/16	1-5/16	
(3) for 48" cut, high-lift, JaZee, JaZee II/Pro, Charger, Trek Hydro										
	91-126	H1666	16-15/16	1/2			2.50/.203	5/16	3/4	
(3) for 48" cut, low-lift, JaZee, JaZee II/Pro, Charger, Trek Hydro										
	99-617	H2202	16-15/16	1/2			2.50/.203	5/16	3/4	
Gator G3										G3
	92-160	H-2653	**16-15/16**	5/8			2.50/.203	5/16	1-1/4	
(3) for 48" cut, high-lift, Edge, Edge XLT, Wrangler										
	92-161	H-2659	16-15/16	5/8			2.50/.203	5/16	3/4	
(3) for 48" cut, low-lift, Edge, Edge XLT, Wrangler										
	92-180 NEW	H-2882	16-15/16	5/8			2.50/.203	5/16	1	
(3) for 48" deck. Notched high-lift										
	592-160	H-2665 H-2883	16-15/16	5/8			3.00/.187	5/16	1	
Gator G5™							High-Lift Xtended Fusion®			G5

B

Blades - OEM Replacements

Country Clipper

	OREGON	OEM No.	Length	Center	Outer	C to C	W / T	Off	Lift	Prod. Code
(3) for 52" cut, (2) for 36" cut , JaZee, Charger, Boss, Trek Hydro	**91-129**	H2246 H2499	**18-3/8**	1/2			2.50/.203	5/16	1-1/4	
(3) for 52" deck, (2) for 36" deck low lift	**92-179** NEW	H-2387	18-3/8	1/2			2.50/.203	5/16	3/4	
Gator® G3™	**96-129**	H2251 H2387	18-3/8	1/2			2.50/.203	5/16	3/4	G3
(3) for 52" cut, high-lift, Charger, JaZee, JaZee Pro, Wrangler, Edge, Edge XLT, Challenger	**92-137**	H-2654	**18-3/8**	5/8			2.50/.203	5/16	1-1/4	
(3) for 52" cut, low-lift, Charger, JaZee, JaZee Pro, Wrangler, Edge, Edge XLT, Challenger	**92-163**	H-2660	18-3/8	5/8			2.50/.203	5/16	3/4	
(3) for 52" deck, (2) for 36" deck high-lift, notched blade	**92-154** NEW	H-2883	18-3/8	5/8			2.50/.203	5/16	1	
Gator G5™	**592-137**	H-2666 H-2884	18-3/8	5/8			3.00/.187	5/16	1	High-Lift Xtended Fusion® G5
(3) for 60" cut, high-lift, JaZee Pro, Charger, Boss	**91-128**	H1708 H2500	**20-15/16**	1/2			2.50/.203	5/16	1-1/4	
(3) for 60" cut, low-lift, JaZee Pro, Charger, Boss	**91-127**	H1667	20-15/16	1/2			2.50/.203	5/16	3/4	
Gator G3	**99-615**	H2122 H2203	20-15/16	1/2			2.50/.203	5/16	3/4	G3
(3) for 60" cut, (2) for 41" cut, high-lift, 1215L, Boss, Charger, JaZee, JaZee Pro, Wrangler, Edge, Edge XLT, Defender, Challenger	**92-138**	H2649 H-2655	**20-15/16**	5/8			2.50/.203	5/16	1-1/4	

GROUP CONTINUES

B

Country Clipper

	OREGON	OEM No.	Length	Center	Outer	C to C	W / T	Off	Lift	Prod. Code
	92-166 NEW	H-2885	20-15/16	5/8			2.50/.203	5/16	1	
(3) for 60" deck, (2) for 41" cut high-lift, notched blade										
	92-181 NEW	H-2886	20-15/16	5/8			2.50/.203	5/16	1	
(3) for 60" deck, (2) for 41" cut high-lift, notched blade							Fusion®			
	392-138	H-2667 H-2885 H-2886	20-15/16	5/8			3.00/.250	5/16	1	
Gator G6®							Heavy-Duty High-Lift Xtended Fusion®			G6
	92-162	H-2650 H-2656	**24-15/16**	5/8			2.50/.203	5/16	1-1/4	
(3) for 72" cut, high-lift, Boss										
	91-533		**25**	1/2			2.50/.250	5/16	1	
(3) for 72" cut, high-lift, Boss										
	91-544	H2397	25	1/2			2.50/.250	5/16	3/4	
(3) for 72" cut, low-lift, Boss										
	92-178 NEW	H-2501	25	1/2			2.50/.203	5/16	1-1/4	
(3) for 72" deck, rolled high-lift										
	91-036		25	1/2			2.50/.250	1/4	1-1/16	
(3) for 72" cut, mulching, Boss							Xtended			
	96-778	H2459 H2501	25	1/2			2.50/.250	5/16	3/4	
Gator® G3™										G3

Craftsman

	95-014	106635X 25034 25034R	**15-3/8**	3/8			2.25/.187	0	1	
(3) for 44" cut										
	95-607		15-3/8	3/8			2.25/.187	0	3/4	
Gator G3										G3
	95-006	130652 130652MS	**15-3/8**	5 pt. Star			2.25/.149	1/8	15/16	
(3) for 44" cut										
	95-049	532130652	15-3/8	5 pt. Star			2.25/.187	0	1	
(3) for 44" cut, heavy-duty										

B

Blades - OEM Replacements

Craftsman

	OREGON	OEM No.	Length	Center	Outer	C to C	W / T	Off	Lift	Prod. Code
(3) for 46" cut, high-lift	**95-052**	157033 170698 176084	**15-1/2**	5 pt. Star			2.25/.149	1/8	1	
(3) for 46" cut, mulcher	**95-045**	145708 152443 163819	15-1/2	5 pt. Star			2.25/.149	1/8	1	
Gator G3	**95-614**		15-1/2	5 pt. Star			2.50/.187	0	3/4	G3
Gator G5™	**595-614**		15-1/2	5 pt. Star			3.00/.164	0	1	G5 High-Lift Xtended Fusion®
(1) 91-615 & (2) 91-616 for 54" cut	**91-615**	1736044AYP	**16**	1	3/8	2-9/16	2.50/.203	0	1-1/4	
(3) for 48" cut, high-lift	**195-062**	173920 180054	**16-11/16**	5 pt. Star	5/16	3-15/16	2.50/.203	0	1-1/4	100 Xtended
(3) for 48" cut, mulching	**95-068**	173921	16-11/16	5 pt. Star			2.50/.203	5/16	13/16	Xtended
Gator® G3™	**96-615**		16-11/16	5 pt. Star			2.50/.203	0	1	G3
Gator G5™	**596-615**		16-11/16	5 pt. Star			3.00/.187	0	1	G5 High-Lift Xtended Fusion®
(3) for 48" cut	**92-139**	942-04417	**17**	3/4			3.00/.203	7/16	1-5/16	
Gator G6®	**392-139**		17	3/4			3.00/.250	7/16	1	G6 Heavy-Duty High-Lift Xtended Fusion®
(3) for 50" cut	**95-027**	121798X	**17-3/8**	3/8			2.25/.187	0	1	

B

Craftsman

	OREGON	OEM No.	Length	Center	Outer	C to C	W / T	Off	Lift	Prod. Code
(3) for 50" cut	**95-018**	137380	**17-3/8**	5 pt. Star			2.25/.149	1/8	15/16	
(3) for 50" cut, high-lift for bagging, heavy-duty	**95-050**		17-3/8	5 pt. Star			2.25/.187	0	1	
Gator G3	**95-609**		17-3/8	5 pt. Star			2.50/.187	0	3/4	G3
Gator G5	**595-609**		17-3/8	5 pt. Star			3.00/.164	0	1	High-Lift Xtended Fusion® G5
(2) for 33" cut, wide-area mowers, 247374880	**98-094**	742-04154 742-04154A 942-04154 942-04154A	**17-7/8**	bow-tie			2.50/.149	1	1-1/8	
Gator® G3™	**98-671**		17-7/8	bow-tie	5/16	2-1/2	2.50/.149	1	3/4	G3
(2) for 36" cut, high-lift for bagging	**95-034**	110785X 120262X 126338X 143969	**18-3/16**	3/8	3/8	10	2.50/.187	0	7/8	
(2) for 36" cut	**95-036**	127841 136969 138496 138969	**18-3/16**	5 pt. Star			2.25/.134	1/8	1	
(2) for 36" cut, heavy-duty version of 95-036	**95-026**		18-3/16	5 pt. Star			2.25/.187	1/8	1	
Gator G3	**95-613**		18-3/16	5 pt. Star			2.50/.187	0	3/4	G3
Gator G5™	**595-613**		18-3/16	5 pt. Star			3.00/.164	0	1	High-Lift Xtended Fusion® G5
(3) for 54" cut	**195-072**	187256	**18-7/16**	5 pt. Star	5/16	3-15/16	2.75/.187	1/2	1-3/16	Xtended 100
(3) for 54" cut, mulching	**95-082**	187255	18-7/16	5 pt. Star			2.50/.187	5/16	13/16	

GROUP CONTINUES

Blades - OEM Replacements

Craftsman

GROUP CONTINUES

	OREGON	OEM No.	Length	Center	Outer	C to C	W / T	Off	Lift	Prod. Code
Gator G3	**95-605**		18-7/16	5 pt. Star			2.50/.187	1/2	3/4	G3
Gator G5	**595-605**		18-7/16	5 pt. Star			3.00/.164	1/2	1	High-Lift Xtended Fusion® G5
(2) for 38" cut, high-lift	**95-031**	121263X 123431X 143978X 532121263 532143978	**19-1/4**	3/8			2.25/.187	0	1	
(2) for 38" cut	**195-033**	127842	**19-1/4**	5 pt. Star	3/8	3-1/8	2.25/.134	1/8	1-1/16	Xtended 100
(2) for 38" cut, heavy-duty version of 95-033	**95-038**		19-1/4	5 pt. Star			2.25/.187	1/8	1-1/16	
(2) for 38" cut, high-lift	**95-047**	131322	19-1/4	5 pt. Star			2.25/.187	0	1	
(2) for 38" cut, mulcher	**195-003**	134148 134148M 134148X 138497 139744MS 139774 24692 532134148 532139774	19-1/4	5 pt. Star	5/16	3-1/8	2.25/.134	1/8	7/8	Xtended 100
(2) for 38" cut, heavy-duty version of 195-003	**95-099**		19-1/4	5 pt. Star			2.25/.149	1/8	1	
Gator® G3™	**95-601**		19-1/4	5 pt. Star			2.50/.187	0	3/4	G3
Gator G5™	**595-601**		19-1/4	5 pt. Star			3.00/.164	0	1	High-Lift Xtended Fusion® G5
(2) for 38" cut	**95-015**	100669K 106634X 24691 25036 25036R 532106634	**19-3/8**	3/8			2.25/.187	0	1	

B

Craftsman

	OREGON	OEM No.	Length	Center	Outer	C to C	W / T	Off	Lift	Prod. Code
20" cut, walk-behind	**95-024**	33203 33204 56400 69229 80204 8029 850972	**19-15/16**	5/8	3/8	1-7/8	2.50/.149	9/16	7/8	
20" cut, mulcher	**95-041**	25744	19-15/16	5/8	3/8	1-7/8	2.50/.149	7/16	15/16	
Gator G5	**595-024**		19-15/16	5/8	3/8	1-7/8	3.00/.134	5/8	1	High-Lift Xtended Fusion® G5
20" cut, mulcher, walk-behind	**95-051**	129277 131694 133346 134871 145106	**20**	5/8	3/8	1-7/8	2.25/.134	7/16	11/16	
20" cut, mulching, walk-behind	**95-044**	114884 532752233 752233	20	5/8	3/8	1-7/8	2.00/.134	5/16	13/16	
(1) 91-615 & (2) 91-616 for 54" cut	**91-616**	1736043AYP	**20-9/16**	1	3/8	2-9/16	2.50/.203	0	1-1/4	
Gator® G3™	**96-398**		20-9/16	1	3/8	2-9/16	2.50/.203	0	1	G3
21" cut, mulching	**98-007**	140026	**20-15/16**	13/16	3/8	2-1/2	2.25/.134	5/16	15/16	
21" cut	**98-002**		20-15/16	13/16	3/8	2-1/2	2.25/.134	1/4	13/16	
Gator G3	**98-102**		20-15/16	13/16	3/8	2-1/2	2.50/.134	5/16	3/4	G3

B

Blades - OEM Replacements

Craftsman

	OREGON	OEM No.	Length	Center	Outer	C to C	W / T	Off	Lift	Prod. Code
(2) for 42" cut, sand blade	**195-048**		**21**	5 pt. Star	5/16	3-1/8	2.25/.187	0	3/4	Xtended 100
(2) for 42" cut, high-lift, fits CT12542B	**195-032**	127843 131323 138498 138791 138971	21	5 pt. Star			2.25/.149	1/8	1-1/16	Xtended 100
(2) for 42" cut, heavy-duty version of 195-032	**195-039**		21	5 pt. Star	5/16	3-1/8	2.25/.187	1/8	1-1/18	Xtended 100
(2) for 42" cut, mulcher	**195-005**	133128 134149 24676 422719 424752	21	5 pt. Star			2.25/.134	1/8	7/8	Xtended 100
(2) for 42" cut, mulching, heavy-duty version of 195-005	**195-019**	139775	21	5 pt. Star			2.25/.149	1/8	15/16	Xtended 100
(2) for 42" cut	**95-086**		21	5 pt. Star			2.50/.203	0	1.000	
Gator® G3™	**96-900**		21	5 pt. Star			2.50/.187	0	3/4	G3
Gator G5™	**596-900**		21	5 pt. Star			3.00/.164	0	1	High-Lift Xtended Fusion® G5
21" cut, walk-behind	**95-071**	159267	**21**	5/8	3/8	1-7/8	2.75/.134	1/2	1-1/8	
21" cut, walk-behind	**95-057**	175064 406712	21	5/8	3/8	1-7/8	2.75/.134	1/2	1-9/16	
21" cut, walk-behind, mulching	**195-067**	189028	21	5/8	3/8	1-7/8	2.25/.134	9/16	1-1/16	Xtended 100
Gator G3	**95-621**	580258101 580258102	21	5/8	3/8	1-7/8	2.50/.187	1/2	3/4	G3
Gator G5	**595-621**		21	5/8	3/8	1-7/8	3.00/.149	1/2	1	High-Lift Xtended Fusion® G5

B

Craftsman

	OREGON	OEM No.	Length	Center	Outer	C to C	W / T	Off	Lift	Prod. Code
(2) for 42" cut	**198-059**	942-0616A	**21-3/16**	5/8 6 pt. Star			2.75/.149	3/8	1-1/2	Xtended 100
Gator G3	**98-629**	942-04312	21-3/16	5/8 6 pt. Star			2.50/.187	5/16	3/4	G3
Gator G5	**598-629**		21-3/16	5/8 6 pt. Star			3.00/.164	5/16	1	High-Lift Xtended Fusion® G5
21" cut, mulcher	**198-049**	942-0741 942-0741A	**21**	bow-tie	5/16	2-1/2	2.25/.134	1/4	15/16	Xtended 100
Gator G3	**98-631**	942-0741A-X	21	bow-tie	5/16	2-1/2	2.50/.187	5/16	3/4	G3
Gator G5	**598-631**		21	bow-tie	5/16	2-1/2	3.00/.149	5/16	1	High-Lift Xtended Fusion® G5
22" cut, walk-behind	**95-023**	33214 33219 406713 532406713 532850973 701213 850973	**21-3/4**	5/8	3/8	1-7/8	2.50/.149	9/16	7/8	
22" cut, walk-behind, mulching	**95-042**	133348 532752234 752234	21-3/4	5/8	3/8	1-7/8	2.50/.149	7/16	15/16	
22" cut, walk-behind, mulching	**195-021**	134768 141114 157101 700973 91333256 91333269	21-3/4	5/8	3/8	1-7/8	2.25/.134	1/2	15/16	Xtended 100
22" cut, walk-behind, mulching	**95-073**	406707 532406707 582931401 917532406707	21-3/4	5/8	3/8	1-7/8	2.25/.134	9/16	1-3/16	
Gator® G3™	**95-602**		21-3/4	5/8	3/8	1-7/8	2.50/.187	1/2	3/4	G3
Gator G5™	**595-602**		21-3/4	5/8	3/8	1-7/8	3.00/.149	1/2	1	High-Lift Xtended Fusion® G5

B

Blades - OEM Replacements

Craftsman

	OREGON	OEM No.	Length	Center	Outer	C to C	W / T	Off	Lift	Prod. Code
For 22" Walkbehind Star Center Hole	**95-076**	402463 421825	**21-15/16**	5 pt. Star			2.25/.134	9/16	13/16	
Gator G3	**95-615**	580244001 585587701	21-15/16	5 pt. Star			2.25/.134	9/16	3/4	G3
(2) for 46" cut	**98-096**	942-04244A 942-04290	**23-1/4**	5/8 6 pt. Star			3.75/.149	1/4	1-3/8	
Gator G3	**96-401**		23-1/4	5/8 6 pt. Star			3.00/.149	1/4	1	G3

Cub Cadet

	OREGON	OEM No.	Length	Center	Outer	C to C	W / T	Off	Lift	Prod. Code
(1) 98-069 and (2) 98-054, for 46" cut - star center hole, center blade for 46" cut model series 600 and 800 built since 1997	**98-069**	742-0645 942-0645	**14-13/16**	5/8 6 pt. Star			3.00/.120	5/16	1-3/16	
Gator® G3™	**98-670**		14-13/16	5/8 6 pt. Star			2.50/.187	5/16	3/4	G3
(1) 91-327 & (2) 91-330 for 46" cut, center blade on 46 deck	**91-327**	742-3010 742-3010-0637 759-3818	**14-7/8**	3/4			3.00/.203	5/16	1-1/4	
							Xtended			
(1) 98-083 & (2) 98-082 for 46"cut LT1046, center blade, round hole	**98-083**	742-04016 759-04020	14-7/8	3/4			2.50/.203	7/16	1-1/8	
							Xtended			
(1) 98-084 & (2) 98-085 for 46" cut LT1046 and i1046, center blade, star hole	**98-084**	742-04124 942-04124	**14-7/8**	5/8 6 pt. Star			2.50/.203	7/16	1-1/8	
							Xtended			
(1) 98-061 & (2) 198-063 for 46" cut, High-lift, LT1046 and i1046, center blade, star hole	**98-061**		14-7/8	5/8 6 pt. Star			2.50/.149	7/16	1-3/16	
							Xtended			
Gator G3	**98-637**	742-04124-X 742-0424-X 942-04124-X 942-0612-X	14-7/8	5/8 6 pt. Star			2.50/.187	7/16	3/4	G3

B

Cub Cadet

	OREGON	OEM No.	Length	Center	Outer	C to C	W / T	Off	Lift	Prod. Code
(3) for 44" cut	**91-414**	742-03002-0637 742-3002 759-3812 IH-59704-C1	**15-1/8**	3/4			2.50/.203	1/2	11/16	
(3) for 44" cut, Z Force Deck	**91-073**	742-3036 759-3929 759-3939 OCC-742-3036	**16**	3/4	5/16	2-1/2	2.50/.203	9/16	1-1/8	
(3) for 44" cut, high-lift, Z Force Deck	**98-080**	01008616 02005020 02005020-0637	**16**	3/4			3.00/.203	7/16	1-5/16	
Gator® G5™	**596-373**		16	3/4	5/16	2-1/2	3.00/.187	1/2	1	High-Lift Xtended Fusion® G5
(2) 91-330 & (1) 91-327 for 46" cut, (2) for 32" cut, outside blade for 46" deck	**91-330**	742-3011 742-3011-0637 759-3819	**16-1/4**	3/4			3.00/.203	5/16	1-3/8	
(1) 98-083 & (2) 98-082 for 46"cut LT1046, center blade, round hole	**98-082**	742-04015 759-04019	**16-5/16**	3/4			2.50/.203	7/16	1-1/8	Xtended
(1) 98-084 & (2) 98-085 for 46" cut LT1046 and i1046, outside blade, star hole	**98-085**	742-04125 942-04125	**16-1/4**	5/8 6 pt. Star			2.50/.203	7/16	1-1/8	Xtended
(1) 98-061 & (2) 198-063 for 46" cut, High-lift, LT1046 and i1046, outside blade, star hole	**198-063**		16-1/4	5/8 6 pt. Star			2.50/.149	7/16	1-1/8	Xtended 100
Gator G3™	**98-640**	742-04125-X 942-04125-X 942-0611-X	16-1/4	5/8 6 pt. Star			2.50/.187	7/16	3/4	G3
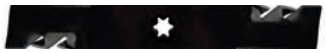 Gator G5	**598-640**		16-1/4	5/8 6 pt. Star			3.00/.164	7/16	1	High-Lift Xtended Fusion® G5
(2) 98-054 & (1) 98-069 for 46" cut, outside blades for 46" cut model series 600 & 800 built since 1997	**98-054**	742-0644 942-0644	**16-1/4**	5/8 6 pt. Star			3.00/.120	5/16	1-3/16	
Gator G3	**98-634**		16-1/4	5/8 6 pt. Star			2.50/.187	5/16	3/4	G3

B

Blades - OEM Replacements

Cub Cadet

	OREGON	OEM No.	Length	Center	Outer	C to C	W / T	Off	Lift	Prod. Code
(3) for 48" cut, Z Force deck, high-lift	**98-081**	1004772	**16-1/2**	3/4			3.00/.203	7/16	1-3/8	
Gator® G3™	**96-381**		16-1/2	3/4			3.00/.203	7/16	3/4	G3
(3) for 48" cut, high-lift	**91-056**	742-3025 759-3826	**16-1/2**	3/4	5/16	2-1/2	2.50/.203	1/2	1-5/16	
(3) for 48" cut, low-lift	**91-333**	742-3019 759-3825 OCC-742-3019	16-1/2	3/4	5/16	2-1/2	2.50/.203	1/2	15/16	
Gator G3	**90-697**		16-1/2	3/4	5/16	2-1/2	2.50/.203	1/2	3/4	G3
Gator G5™	**596-330**		16-1/2	3/4	5/16	2-1/2	3.00/.187	1/2	1	High-Lift Xtended Fusion® G5
(3) for 48" cut, Tank LZ, Tank SZ, Z-Force, Z-Force S	**92-139**	1005336P 2005017 742-04417 942-04417	**17**	3/4			3.00/.203	7/16	1-5/16	
Gator G6®	**392-139**	02005017-X 742-04417-X 942-04417-X	17	3/4			3.00/.250	7/16	1	Heavy-Duty High-Lift Xtended Fusion® G6
(3) for 50" cut	**91-415**	742-3003 759-3813 759-3837 IH-61104-C1	**17-3/16**	3/4			2.50/.203	1/2	11/16	
Gator G3	**90-656**		17-3/16	3/4			2.50/.203	7/16	3/4	G3
(3) for 50" cut, Z Force deck, LT1050, RZT-50	**198-086**	490-110-C123 490-110-M126 742-04053 742-04053A 742-04053B 742-04053C 942-04053 942-04053A	**17-7/8** 5/8 6 pt. Star				2.50/.149	7/8	3/4	Xtended 100
		942-04053B 942-04053C OCC-742-04053 OEM-742-04053								

GROUP CONTINUES

Cub Cadet

	OREGON	OEM No.	Length	Center	Outer	C to C	W / T	Off	Lift	Prod. Code
(3) for 50" cut, High-lift, Z Force deck, LT1050, RZT-50	**98-097**	742-04056 742-04056A 742-04056A-0637 742-04056B 742-04056B-0637 742-04056C 742-04056C-0637 942-04056 942-04056A	17-7/8	5/8 6 pt. Star			2.50/.149	15/16	1-3/8	
Gator® G3™	**91-938**	942-04053C-X 942-04053-X	17-7/8	5/8 6 pt. Star			2.50/.187	15/16	3/4	G3
Gator G5™	**591-938**		17-7/8	5/8 6 pt. Star			3.00/.164	15/16	1	High-Lift Xtended Fusion® G5
(3) for 50" cut, LT1024, LT1050	**98-087**	742-04068 742-04068C 759-04047 OCC-742-04068	**17-7/8**	3/4			2.50/.149	1	1-1/8	Xtended
Gator G3	**96-387**		17-7/8	3/4			2.50/.187	1	3/4	Xtended G3
Gator G5	**596-387**		17-7/8	3/4			3.00/.164	15/16	1	High-Lift Xtended Fusion® G5
(3) for 50" cut, M50-KHS, Z Force	**92-015**	01010168 01010168-0637 01010168-X OCC-01010168	**17-7/8**	3/4			2.50/.203	0	1	
Gator G5	**592-015**		17-7/8	3/4			3.00/.164	0	1	High-Lift Xtended Fusion® G5
(2) For 33" wide-area mowers	**98-094**	742-04154 742-04154A 942-04154 942-04154A OCC-742-04154	**17-7/8**	bow-tie			2.50/.149	1	1-1/8	
Gator G3	**98-671**		17-7/8	bow-tie	5/16	2-1/2	2.50/.149	1	3/4	G3

Blades - OEM Replacements

Cub Cadet

	OREGON	OEM No.	Length	Center	Outer	C to C	W / T	Off	Lift	Prod. Code
(3) for 54" cut, 2002 and newer	**98-072**	742-0677 742-0677A 742-0677B 942-0677B OCC-742-0677 OEM-742-0677	**18-1/2**	5/8 6 pt. Star			3.00/.203 Xtended	1/2	1-1/4	
Gator® G3™	**98-672**		18-1/2	5/8 6 pt. Star			2.50/.203	1/2	1	G3
Gator G5™	**598-672**		18-1/2	5/8 6 pt. Star			3.00/.203 High-Lift Xtended Fusion®	1/2	1	G5
Gator G6®	**398-672**		18-1/2	5/8 6 pt. Star			3.00/.250 Heavy-Duty High-Lift Xtended Fusion®	1/2	1	G6
(3) for 54" cut, high-lift	**91-440**	490-110-C121 742-3013 742-3013-0637 759-3820 OCC-742-3013	**18-1/2**	3/4			3.00/.203 Xtended	1/2	1-1/4	
Gator G3	**96-333**	759-3857	18-1/2	3/4			2.50/.203	1/2	3/4	G3
Gator G5	**596-333**		18-1/2	3/4			3.00/.203 High-Lift Xtended Fusion®	1/2	1	G5
19" cut, mulching, CC189, CC500, CC550ES, CC550SP	**92-140**	742-0739 942-0739 OCC-742-0739	**19**	bow-tie	5/16	2-1/2	2.25/.134	1/4	1-1/8	
(3) for 54" cut, Tank, M54	**98-091**	01005337P 1005337 2005018 942-04416	**19**	3/4			3.00/.203	7/16	1-5/16	
Gator G3	**96-351**	02005018-X 742-04416-X 942-04416-X	19	3/4			3.00/.203	9/16	1	G3
Gator G5	**596-351**		19	3/4			3.00/.203 High-Lift Xtended Fusion®	5/8	1	G5

B

Cub Cadet

	OREGON	OEM No.	Length	Center	Outer	C to C	W / T	Off	Lift	Prod. Code
(2) 98-537 & (2) 98-539 for 38" cut, side discharge, deep deck - 1992 & after	**98-537**	742-0537	**19-5/16**	3/8	7/16	2-1/2	3.00/.149	5/16	1	
(2) for 38" deck for bagging, (1) 98-044 & (1) 98-043 - 1986 to 1996 in non-bagging operations, right-hand side	**98-044**	742-0323 742-0473 742-0473A 742-0504 742-0504A 942-0504 942-0504A OEM-742-0473 OEM-742-0473A	19-5/16	3/8	5/16	2-1/2	3.00/.149	5/16	1-3/8	
(2) for 38" cut, sand blade, deep deck 1986-1996	**98-493**	742-0493	19-5/16	3/8	5/16	2-1/2	3.00/.149	5/16	1-3/16	
(2) for 38" cut, 2130, 2135	**91-329**	742-3009 759-3817	**19-3/8**	3/4			3.00/.203	5/16	7/8	
(2) for 38" cut, mulching, 1515, 1525, 213, 2130, 2135, 2146, LT2138	**91-057**	742-0321 742-0322 742-3032 759-3829 942-0473A	19-3/8	3/4	5/16	2-1/2	2.75/.187	5/16	1-1/2	
Gator® G3™	**96-697**		19-3/8	3/4			3.00/.203	5/16	3/4	G3
20" cut walk-behind, mulching	**98-066**	942-0740	**20**	bow-tie	5/16	2-1/2	2.25/.134	5/16	1-1/8	
20" cut walk-behind, high-lift	**98-068**		20	bow-tie	5/16	2-1/2	2.25/.134	5/16	13/16	
(3) for a 60" cut, 3660 and Z Force, some Tanks	**91-144**	01001805 01003280 01003805 01004719 01004719P 1004719-0637 OCC-01004719	**20-1/2**	3/4			3.00/.203	1/2	1-5/16	
Gator G3	**96-677**		20-1/2	3/4			3.00/.203	1/2	1	G3

B

Blades - OEM Replacements

Cub Cadet

	OREGON	OEM No.	Length	Center	Outer	C to C	W / T	Off	Lift	Prod. Code
	98-002		**20-15/16**	13/16	3/8	2-1/2	2.25/.134	1/4	13/16	
21" cut, 312R, 313R, 315R, 488, 828, 848, 100, 400, 500, 800 1993 & after, walk-behinds										
	98-007	742-0536 742-0563 742-0721 942-0721 OEM-742-0721	20-15/16	13/16	3/8	2-1/2	2.25/.134	5/16	15/16	
21" cut, mulching blade for models 312R, 313R, 315R, 488, 828, 848, 100, 400, 500, 800 1993 & after, walk-behinds										
	98-102		20-15/16	13/16	3/8	2-1/2	2.50/.134	5/16	3/4	G3
Gator® G3™										
	98-098	OEM-742-0641	**21**	bow-tie	5/16	2-1/2	2.25/.134	1/4	13/16	
21" cut, 5521, CC439, CC46ES, CC46M, CC46MX, CC469, CC94M, CC94M, CC949, CC997ES, CC997ES, CC98, CC98H, CC98K, CC98M, CC989, CC997ES, CC999ES, PR521, SC500, S621, S621S, SC500E, SC500HW, SC500Z, SC621, SC621E, SRC621, SR621, SRE621										
	198-049	490-100-C089 490-100-M084 742-04276 742-04276S 742-0741 742-0741A 942-04276 942-0741 942-0741A CC-742-0741 OEM-742-0741	21	bow-tie	5/16	2-1/2	2.25/.134	1/4	15/16	Xtended 100
21" cut, mulching, 5521, CC439, CC46ES, CC46M, CC46MX, CC469, CC94M, CC94M, CC949, CC997ES, CC997ES, CC98, CC98H, CC98K, CC98M, CC989, CC997ES, CC999ES, PR521, SC500, S621, S621S, SC500E, SC500HW, SC500Z, SC621, SC621E, SRC621, SR621, SRE621										
	98-631	742-04380 742-04380-0684 742-0741A-X 742-0741-X 942-04380 942-04380-0684 942-0741A-X 942-0741-X	21	bow-tie	5/16	2-1/2	2.50/.187	5/16	3/4	G3
Gator G3										
	598-631		21	bow-tie	5/16	2-1/2	3.00/.149	5/16	1	High-Lift Xtended Fusion® G5
Gator G5™										
	91-442	759-3411 759-3839 IH-83614-C1	**21**	1/2			2.00/.250	7/16	1-1/8	
(3) for 60" cut, 325, 374										

B

Cub Cadet

	OREGON	OEM No.	Length	Center	Outer	C to C	W / T	Off	Lift	Prod. Code
(3) for 60" cut, Tank and RECON	**98-071**	01005338 01005338P 02005019 742-04415 942-04415	**21**	3/4			3.00/.203	1/2	1-5/16	
Gator® G3™	**96-300**	02005019-X 742-04415-X 742-04415-XG 942-04415-X	21	3/4			3.00/.203	1/2	1	G3
Gator G5™	**596-300**		21	3/4			3.00/.203	1/2	1	High-Lift Xtended Fusion® G5
(2) for 42" cut, RZT-17	**98-088**		**21-1/8**	5/8 6 pt. Star			3.00/.164	3/8	1-5/16	
(2) for 42" cut, LT1042	**98-090**	490-110-C119 742-04126 942-04126 OCC-742-04126	21-1/8	5/8 6 pt. Star			2.75/.187	1/4	1-3/8	
(2) for 42" cut, mulching, LT1042	**91-058**	490-110-C129 742-04101 759-04081 759-3830 CC-742-3033 OCC-742-04101	**21-1/8**	3/4	5/16	2-1/2	2.75/.187	1/4	1-3/8	
Gator G3	**91-635**	759-3830-X	21-1/8	3/4	5/16	2-1/2	2.50/.187	1/4	3/4	G3
Gator G5	**591-635**		21-1/8	3/4	5/16	2-1/2	3.00/.164	5/16	1	High-Lift Xtended Fusion® G5
(2) for 42" cut, mulcher, LTX1040, LTX1042, LTX1042KW, LTX1042KH, LTX1045, RZT42, RZT-S42, RZT-L42	**198-059**	490-110-C109 490-110-C122 490-110-M115 7420616 742-0616 742-0616A 942-0616	**21-3/16**	5/8 6 pt. Star			2.75/.149	3/8	1-1/2	Xtended 100
		942-0616A GW-7420616 OCC-742-0616 OEM-742-0616								
(2) for 42" cut, high-lift, LTX1040, LTX1042, LTX1042KW, LTX1042KH, LTX1045, RZT42, RZT-S42, RZT-L42	**98-093**	490-110-M108 742-04308 742-0656 942-04308 942-0656 OCC-742-04312 OEM-742-04308	21-3/16	5/8 6 pt. Star			2.75/.149	3/8	7/8	

GROUP CONTINUES

B

Blades - OEM Replacements

Cub Cadet

GROUP CONTINUES

	OREGON	OEM No.	Length	Center	Outer	C to C	W / T	Off	Lift	Prod. Code
(2) for 42" cut, LTX1040, LTX1042, LTX1042KW, LTX1042KH, LTX1045, RZT42, RZT-S42, RZT-L42	**198-153**	742-04087 942-04087	21-3/16	5/8 6 pt. Star			3.00/.149	5/16	1-1/4	Xtended — **100**
Gator® G3™	**98-629**	742-04312 742-04360 742-04410 942-04126-X 942-04308-X 942-04312 942-04312-X 942-04360 942-04360-0684 942-04410 942-04410-0684 942-0616-X	21-3/16	5/8 6 pt. Star			2.50/.187	5/16	3/4	**G3**
Gator G5™	**598-629**		21-3/16	5/8 6 pt. Star			3.00/.164	5/16	1	High-Lift Xtended Fusion® — **G5**
(2) for 42" deck, star center hole, 2-in-1 blade, side discharges and mulches. Fits two-blade 42" lawn tractors and RZT mowers (1997 and newer). For Troy-Bilt, MTD, MTD Gold, Bolens, White Outdoor, Yard Machines, Yard Man, and Huskee lawn tractors	**98-099** NEW	942-04312	**21-1/4**	5/8	3/8	3	2 .50/.138	7/16	1-1/8	
(2) for 42" cut, lawn tractors	**91-332**	742-3018 759-3824	**21-1/4**	3/4	5/16	2-1/2	3.00/.203	3/8	15/16	
Gator G3	**96-350**	742-04374 942-04374	21-1/4	3/4	5/16	2-1/2	2.50/.203	3/8	1	**G3**
(2) for 46" cut, LTX1045, LTX1046, LTX1046VT	**98-096**	490-110-C131 742-04244 742-04244A 742-04290 942-04244 942-04244A 942-04290 OCC-742-04244	**23-1/4**	5/8 6 pt. Star			3.75/.149	1/4	1-3/8	
Gator G3 For stamped decks 2012 and older. Not compatible with stamped decks 2013 and newer	**96-401**	742-04290-X 742-04361 942-04244A-X 942-04244-X 942-04361 942-04361-0684	23-1/4	5/8 6 pt. Star			3.00/.149	1/4	1	**G3**
Gator G6®, (3) for 72" cut, Tank	**396-815**	01007522 742-04418 742-04418-0637	**25**	3/4			3.00/.250	0	1	Heavy-Duty High-Lift Xtended Fusion® — **G6**

Dixie Chopper

	OREGON	OEM No.	Length	Center	Outer	C to C	W / T	Off	Lift	Prod. Code
(3) for 42" cut	**91-501**	30227-42 63227 63227-N 93227H	**14-1/2**	5/8			2.50/.203	0	1-1/16	
							Xtended			
Gator® G6®	**396-714**	63227-H	14-1/2	5/8			3.00/.250	0	1	
							Heavy-Duty High-Lift Xtended Fusion®			G6
(3) for 42" cut, Zee 1	**92-142**	300632 301067	**15-1/8**	1/2			2.50/.203	0	1	
Gator G6	**392-142**		15-1/8	1/2			3.00/.250	0	1	
							Heavy-Duty High-Lift Xtended Fusion®			G6
(3) for 50" cut	**91-502**	30227-50	**17**	5/8			2.50/.203	0	1-3/16	
							Xtended			
(3) for 50" cut, high-lift	**91-505**	30227-50V	17	5/8			2.50/.250	0	1-1/8	
							Xtended			
(3) for 50" cut, new style with rolled air lift	**91-508**	30227-50H 30227-H 30227-N	17	5/8			2.50/.250	0	1-3/16	
							Xtended			
(3) for 44" cut, Iron Eagle, Silver Eagle, for 50" classic x-style blade	**91-525**	30227-50X	17	5/8			2.50/.250	5/16	1-3/16	
Gator G3™	**96-323**	30227-50E 30227-50T	17	5/8			2.50/.203	0	1	
										G3
Gator G5™	**596-323**		17	5/8			3.00/.203	0	1	
							High-Lift Xtended Fusion®			G5
Gator G6	**396-723**		17	5/8			3.00/.250	0	1	
							Heavy-Duty High-Lift Xtended Fusion®			G6
(3) for 48" cut, Zee 1	**92-141**	300819 301068	**17-1/4**	1/2			2.50/.203	0	1	
Gator G6	**392-141**		17-1/4	1/2			3.00/.250	0	1	
							Heavy-Duty High-Lift Xtended Fusion®			G6

B

Blades - OEM Replacements

Dixie Chopper

	OREGON	OEM No.	Length	Center	Outer	C to C	W / T	Off	Lift	Prod. Code
(3) for 52" cut	**92-044**		**17-7/8**	5/8			2.50/.203	0	1-1/16	Xtended
(3) for 52" cut, low-lift	**90-206**		17-7/8	5/8			2.50/.203	0	13/16	
Gator® G3™	**96-318**	30227-52T 30227-52X	17-7/8	5/8			2.50/.203	0	3/4	G3
Gator G5™	**596-704**		17-7/8	5/8			3.00/.203	0	1	High-Lift Xtended Fusion® G5
Gator G6®	**396-704**		17-7/8	5/8			3.00/.250	0	1	Heavy-Duty High-Lift Xtended Fusion® G6
(3) for 62" cut	**94-029**		**20**	5/8			2.50/.250	3/16	1	
Gator G3	**94-620**	30227-56T 30227-56X	20	5/8			2.50/.203	3/16	3/4	G3
(3) for 60" cut	**91-503**	30227-60	**20-1/2**	5/8			2.50/.203	0	1-3/16	Xtended
(3) for 60" cut, high-lift	**91-506**	30227-60V	20-1/2	5/8			2.50/.250	0	1-3/16	Xtended
(3) for 60" cut, low-lift	**91-378**		20-1/2	5/8			2.50/.203	0	5/8	
(3) for 60" cut, mulching	**91-311**		20-1/2	5/8			2.50/.203	0	1	Xtended
(3) for 60" cut, new style with rolled air lift	**91-509**	30227-60H	20-1/2	5/8			2.50/.250	0	1-1/8	Xtended
(3) for 60" cut, classic x-style blade	**91-527**	30227-60X	20-1/2	5/8			2.50/.250	5/16	1-3/16	
(3) for 60" cut	**90-109**	A30227-60N	20-1/2	5/8			3.00/.250	0	1-3/16	Xtended

GROUP CONTINUES

B

Dixie Chopper

	OREGON	OEM No.	Length	Center	Outer	C to C	W / T	Off	Lift	Prod. Code
			GROUP CONTINUES							
(3) for 60" cut	**91-253**		20-1/2	5/8			2.50/.250	0	1-1/8	
(3) for 60" cut	**91-264**		20-1/2	5/8			2.50/.203	0	1	
							Xtended			
(3) for 60" cut	**92-037**		20-1/2	5/8			2.50/.203	0	1-1/16	
							Xtended			
(3) for 60" cut	**92-038**		20-1/2	5/8			2.50/.203	0	13/16	
							Xtended			
(3) for 60" cut	**94-055**		20-1/2	5/8			2.50/.250	0	1	
Gator® G3™	**96-319**	30227-60E 30227-60T	20-1/2	5/8			2.50/.203	0	3/4	G3
Gator G5™	**596-319**		20-1/2	5/8			3.00/.203	0	1	
							High-Lift Xtended Fusion®			G5
Gator G6®	**396-740**		20-1/2	5/8			3.00/.250	0	1	
							Heavy-Duty High-Lift Xtended Fusion®			G6
(3) for 66" cut, all models	**91-528**	30227-66X	**23-5/16**	5/8			2.50/.250	5/16	1-3/16	
							Xtended			
Gator G6	**396-524**	30227-66E 30227-66T	23-5/16	5/8			3.00/.250	0	1	
							Heavy-Duty High-Lift Xtended Fusion®			G6
(3) for 72" cut, high-lift, all models	**91-507**	30227-72H	**24-1/16**	5/8			2.50/.250	0	1-1/8	
							Xtended			
(3) for 72" cut, all models	**91-515**	30227-72N	24-1/16	5/8			3.00/.250	0	1-1/8	
							Xtended			
Gator G5	**596-752**		24-1/16	5/8			3.00/.203	0	1	
							High-Lift Xtended Fusion®			G5
Gator G6	**396-752**	30227-72T 30227-72X	24-1/16	5/8			3.00/.250	0	1	
							Heavy-Duty High-Lift Xtended Fusion®			G6

B

Blades - OEM Replacements

Dixie Chopper

OREGON	OEM No.	Length	Center	Outer	C to C	W / T	Off	Lift	Prod. Code
(3) for 74", XCaliber x-style blade	**91-526**	30227-74X	**26**	5/8		2.50/.250	5/16	1-3/16	
						Xtended			
Gator® G6®	**391-526**	30227-74T	26	5/8		3.00/.250	5/16	1	
						Heavy-Duty High-Lift Xtended Fusion®			G6

Dixon

(3) for 42" cut, 1, 2, 3, 421, 422, 423, 424, 426	**91-500**	13939 13940 6092	**14-1/2**	11/16		2.00/.203	0	13/16	
(3) for 42" cut, high-lift	**91-167**	13920 13938 539119838 539119853 539126275 539129683 539129700 8688	14-1/2	11/16		2.50/.187	0	1-1/4	
Gator G3™	**96-303**	13942 575139201 6236 6896	14-1/2	11/16		2.50/.203	0	1	G3
Gator G5™	**596-303**		14-1/2	11/16		3.00/.203	0	1	
						High-Lift Xtended Fusion®			G5
(3) for 42" cut	**95-084**	539112078	**14-5/8**	5 pt. Star		2.50/.203	0	1	
Gator G3	**95-088**		14-5/8	5 pt. Star		2.50/.203	0	3/4	G3
Gator G5	**595-088**		14-5/8	5 pt. Star		3.00/.164	0	1	
						High-Lift Xtended Fusion®			G5
(3) for 44" cut, high-lift, Ram	**491-530**	13867 13918 13943 17279 539119836	**14-15/16**	11/16		2.50/.203	0	1-1/4	
						Xtended Fusion®			
Gator® G3™	**496-399**	13944 13945 13947 17280 17281 539119862	14-15/16	11/16		2.50/.203	0	3/4	
						Xtended Fusion®			G3

B

Dixon

	OREGON	OEM No.	Length	Center	Outer	C to C	W / T	Off	Lift	Prod. Code
(3) for 44" cut	**91-369**	10710	**15-1/4**	5/8			2.50/.203	0	1	
							Xtended			
(3) for 44" cut, mulching	**91-373**		15-1/4	5/8			2.50/.203	0	1	
							Xtended			
Gator G3	**96-327**	10708	15-1/4	5/8			2.50/.203	0	1	
							Xtended			G3
Gator G5™	**596-327**		15-1/4	5/8			3.00/.203	0	1	
							High-Lift Xtended Fusion®			G5
(3) for 48" cut	**99-127**	539106040	**16-1/4**	5/8			2.50/.203	0	1-1/16	
(3) for 48" cut	**91-183**		16-1/4	5/8			2.50/.250	0	1	
(3) for 48" cut	**91-180**		16-1/4	5/8			2.50/.187	0	1	
(3) for 48" cut	**91-313**		16-1/4	5/8			2.50/.203	0	1	
(3) for 48" cut, mulching	**91-368**		16-1/4	5/8			2.50/.203	0	1	
							Xtended			
Gator G3	**96-310**		16-1/4	5/8			2.50/.203	0	3/4	G3
Gator G5	**596-310**		16-1/4	5/8			3.00/.203	0	1	
							High-Lift Xtended Fusion®			G5
(3) for 48" cut, Ram 48	**95-087**	539113425 575296401	**16-1/4**	5 pt. Star			2.50/.203	0	1	
Gator® G5™	**595-087**		16-1/4	5 pt. Star			3.00/.164	0	1	
							High-Lift Xtended Fusion®			G5

B

Blades - OEM Replacements

Dixon

	OREGON	OEM No.	Length	Center	Outer	C to C	W / T	Off	Lift	Prod. Code
(3) for 48" cut	**91-620**	11645 539100340	**16-1/2**	5/8			2.50/.203	0	1	
							Xtended			
(3) for 48" cut, high-lift, Fas Trak, Sport, X-One	**92-737**		16-1/2	5/8			2.50/.203	0	1-1/16	
							Xtended			
(3) for 48" cut, mulching, Fas Trak, Sport, X-One	**92-743**		16-1/2	5/8			2.50/.203	0	1	
							Xtended			
(3) for 48" cut	**92-207**		16-1/2	5/8			2.50/.203	0	13/16	
							Xtended			
(3) for 48" cut	**91-621**		16-1/2	5/8			3.00/.203	0	1-1/2	
(3) for 48" cut	**92-145**		16-1/2	5/8			2.50/.203	0	1	
(3) for 48" cut	**99-126**		16-1/2	5/8			2.50/.203	0	1-1/16	
Gator G3™	**96-308**		16-1/2	5/8			2.50/.203	0	1	G3
Gator G5	**596-308**		16-1/2	5/8			3.00/.203	0	1	
							High-Lift Xtended Fusion®			G5
Gator G6®	**396-735**		16-1/2	5/8			3.00/.250	0	1	
							Heavy-Duty High-Lift Xtended Fusion®			G6
(3) for 48" cut	**195-062**	532180054	**16-11/16**	5 pt. Star	5/16	3-15/16	2.50/.203	0	1-1/4	
							Xtended			100
(3) for 48" cut, mulching	**95-068**		16-11/16	5 pt. Star			2.50/.203	5/16	13/16	
							Xtended			
Gator® G3™	**96-615**		16-11/16	5 pt. Star			2.50/.203	0	1	G3
Gator G5™	**596-615**		16-11/16	5 pt. Star			3.00/.187	0	1	
							High-Lift Xtended Fusion®			G5

B

Dixon

	OREGON	OEM No.	Length	Center	Outer	C to C	W / T	Off	Lift	Prod. Code
(3) for 48" cut, high-lift	**91-123**		**16-15/16**	1/2			2.50/.203	5/16	1-5/16	
(3) for 48" cut, low-lift	**91-126**	60292	16-15/16	1/2			2.50/.203	5/16	3/4	
Gator G3	**99-617**	539129860 60460	16-15/16	1/2			2.50/.203	5/16	3/4	G3
(3) for 48" cut, high-lift	**92-160**	539127977 60296	**16-15/16**	5/8			2.50/.203	5/16	1-1/4	
(3) for 48" cut, low-lift	**92-161**		16-15/16	5/8			2.50/.203	5/16	3/4	
Gator G5	**592-160**		16-15/16	5/8			3.00/.187	5/16	1	High-Lift Xtended Fusion® G5
(3) for 50" cut	**91-508**	539126431 9258 9265	**17**	5/8			2.50/.250	0	1-3/16	Xtended
(3) for 50" cut, high-lift	**91-505**		17	5/8			2.50/.250	0	1-1/8	Xtended
(3) for 50" cut	**91-502**		17	5/8			2.50/.203	0	1-3/16	Xtended
Gator® G3™	**96-323**		17	5/8			2.50/.203	0	1	G3
Gator G5™	**596-323**		17	5/8			3.00/.203	0	1	High-Lift Xtended Fusion® G5
Gator G6®	**396-723**		17	5/8			3.00/.250	0	1	Heavy-Duty High-Lift Xtended Fusion® G6
(3) for 50" cut, high-lift, 1950, 2300, 4515B, 4516K, 4518K, Grizzly, Kodiak, Ram, ZTR(1001, 4423, 4425, 4426, 4515B, 4516K, 4518K, 5004, 5005, 5017, 5020, 5022, 5023, 5024, 5502)	**91-146**	13919 539117174 539119863 9444	**17**	11/16			2.50/.187	0	1-1/4	

GROUP CONTINUES

Blades - OEM Replacements

Dixon

GROUP CONTINUES

	OREGON	OEM No.	Length	Center	Outer	C to C	W / T	Off	Lift	Prod. Code
Gator G3	**90-669**	13948 13949 13950 13952 13955 6897 9443	17	11/16			2.50/.203	0	3/4	G3
Gator G5	**590-669**		17	11/16			3.00/.203	0	1	High-Lift Xtended Fusion® G5
(3) for 52" cut	**91-256**	539105712	**18**	5/8			2.50/.203	0	1	Xtended
(3) for 52" cut, high-lift	**91-623**		18	5/8			3.00/.203	0	1-1/2	Xtended
(3) for 52" cut, mulching	**91-218**		18	5/8			2.50/.164	0	1	Xtended
(3) for 52" cut	**91-622**		18	5/8			2.50/.203	0	1	Xtended
(3) for 52" cut	**91-181**		18	5/8			2.50/.187	0	1	Xtended
(3) for 52" cut	**91-184**		18	5/8			2.50/.250	0	1	Xtended
(3) for 52" cut	**91-312**		18	5/8			2.50/.203	0	1	Xtended
(3) for 52" cut	**91-335**		18	5/8			2.50/.203	0	1	Xtended
(3) for 52" cut	**94-053**		18	5/8			2.50/.250	0	1	
Gator® G3™	**96-344**		18	5/8			2.50/.203	0	3/4	G3
Gator G5™	**596-344**		18	5/8			3.00/.203	0	1	High-Lift Xtended Fusion® G5
Gator G6®	**396-726**		18	5/8			3.00/.250	0	1	Heavy-Duty High-Lift Xtended Fusion® G6

Dixon

OREGON	OEM No.	Length	Center	Outer	C to C	W / T	Off	Lift	Prod. Code
(3) for 50 & 52" cut, Kodiak, Ram, Ultra	**95-085**	10782 10881 510417801 539117911 539117973	**18**	5 pt. Star			2.50/.203	0	1	
Gator G5	**595-085**		18	5 pt. Star			3.00/.164	0	1	G5
(2) for 36" cut	**91-622**	11633 539100341	**18**	5/8			2.50/.203	0	1	
(2) for 36" cut, high-lift	**91-623**		18	5/8			3.00/.203	0	1-1/2	
(2) for 36" cut, low-lift	**91-235**		18	5/8			2.50/.250	0	7/8	
(2) for 36" cut, mulching	**91-218**		18	5/8			2.50/.164	0	1	
(2) for 36" cut	**91-181**		18	5/8			2.50/.187	0	1	
(2) for 36" cut	**91-184**		18	5/8			2.50/.250	0	1	
(2) for 36" cut	**91-256**		18	5/8			2.50/.203	0	1	
(2) for 36" cut	**91-312**		18	5/8			2.50/.203	0	1	
(2) for 36" cut	**91-335**		18	5/8			2.50/.203	0	1	
(2) for 36" cut	**94-053**		18	5/8			2.50/.250	0	1	
Gator® G3™	**96-344**	10715	18	5/8			2.50/.203	0	3/4	G3

GROUP CONTINUES

Blades - OEM Replacements

Dixon

GROUP CONTINUES

	OREGON	OEM No.	Length	Center	Outer	C to C	W / T	Off	Lift	Prod. Code
Gator G5™	596-344		18	5/8			3.00/.203	0	1	High-Lift Xtended Fusion® G5
Gator G6®	396-726		18	5/8			3.00/.250	0	1	Heavy-Duty High-Lift Xtended Fusion® G6
(3) for 52" cut	91-129		18-3/8	1/2			2.50/.203	5/16	1-1/4	
Gator G3	96-129	539128189 539128819 60645 61656 61695	18-3/8	1/2			2.50/.203	5/16	3/4	G3
(3) for 54" cut	195-072	532187756	18-7/16	5 pt. Star	5/16	3-15/16	2.75/.187	1/2	1-3/16	Xtended 100
(3) for 54" cut, mulching	95-082		18-7/16	5 pt. Star			2.50/.187	5/16	13/16	
Gator G3	95-605		18-7/16	5 pt. Star			2.50/.187	1/2	3/4	G3
Gator G5	595-605		18-7/16	5 pt. Star			3.00/.164	1/2	1	High-Lift Xtended Fusion® G5
Low lift version of 91-714	91-713		18-1/2	3/4	3/8	2-9/16	2.00/.187	0	3/4	
(1) LH side for 63" cut model 361 with catcher	91-714	1352 539115245	18-1/2	3/4	3/8	2-9/16	2.50/.164	0	1-5/16	
(2) for 36" cut	99-133		18-1/2	3/4			2.50/.203	0	1-1/8	
Gator G3	96-133	11913 11914 11949 539118672 539118673	18-1/2	3/4			2.50/.203	0	3/4	G3
Gator G5™	599-133		18-1/2	3/4			3.00/.203	0	1	High-Lift Xtended Fusion® G5

B

Dixon

	OREGON	OEM No.	Length	Center	Outer	C to C	W / T	Off	Lift	Prod. Code
(3) for 54" cut	**95-092**	575265901	**19**	5/8			2.50/.250	0	1	
(2) for 38" cut	**195-033**		**19-1/4**	5 pt. Star	3/8	3-1/8	2.25/.134	1/8	1-1/16	Xtended 100
(2) for 38" cut, heavy-duty version of 195-033	**95-038**		19-1/4	5 pt. Star			2.25/.187	1/8	1-1/16	
(2) for 38" cut, high-lift	**95-047**	13925 13932 539119842 539119849	19-1/4	5 pt. Star			2.25/.187	0	1	
(2) for 38" cut, mulching	**195-003**		19-1/4	5 pt. Star	5/16	3-1/8	2.25/.134	1/8	7/8	Xtended 100
(2) for 38" cut, heavy-duty version of 195-003	**95-099**		19-1/4	5 pt. Star			2.25/.149	1/8	1	
Gator® G3™	**95-601**	13933 539119860	19-1/4	5 pt. Star			2.50/.187	0	3/4	G3
Gator G5™	**595-601**		19-1/4	5 pt. Star			3.00/.164	0	1	High-Lift Xtended Fusion® G5
(3) for 60" cut, model 8025	**91-253**	12421 13922 13956 539119871 9383	**20-1/2**	5/8			2.50/.250	0	1-1/8	
(3) for 60" cut, high-lift	**92-037**		20-1/2	5/8			2.50/.203	0	1-1/16	Xtended
(3) for 60" cut, low-lift	**92-038**		20-1/2	5/8			2.50/.203	0	13/16	Xtended
(3) for 60" cut, mulching	**91-311**		20-1/2	5/8			2.50/.203	0	1	Xtended
(3) for 60" cut, Super Z, Z, XR-7 deck	**90-109**		20-1/2	5/8			3.00/.250	0	1-3/16	Xtended

GROUP CONTINUES

B

Blades - OEM Replacements

Dixon

GROUP CONTINUES

	OREGON	OEM No.	Length	Center	Outer	C to C	W / T	Off	Lift	Prod. Code
(3) for 60" cut	**91-264**		20-1/2	5/8			2.50/.203	0	1	
							Xtended			
(3) for 60" cut	**91-378**		20-1/2	5/8			2.50/.203	0	5/8	
(3) for 60" cut	**91-503**		20-1/2	5/8			2.50/.203	0	1-3/16	
							Xtended			
(3) for 60" cut	**91-506**		20-1/2	5/8			2.50/.250	0	1-3/16	
							Xtended			
(3) for 60" cut	**91-509**		20-1/2	5/8			2.50/.250	0	1-1/8	
							Xtended			
(3) for 60" cut	**94-055**		20-1/2	5/8			2.50/.250	0	1	
Gator® G3™	**96-319**	12451 12508 13368 13869 13870 13921 13957 13958 13960	20-1/2	5/8			2.50/.203	0	3/4	G3
Gator G5™	**596-319**		20-1/2	5/8			3.00/.203	0	1	
							High-Lift Xtended Fusion®			G5
Gator G6®	**396-740**		20-1/2	5/8			3.00/.250	0	1	
							Heavy-Duty High-Lift Xtended Fusion®			G6
(3) for 60" cut, high-lift	**91-128**		**20-15/16**	1/2			2.50/.203	5/16	1-1/4	
(3) for 60" cut, low-lift	**91-127**	539127975 60293	20-15/16	1/2			2.50/.203	5/16	3/4	
Gator G3	**99-615**	60461	20-15/16	1/2			2.50/.203	5/16	3/4	G3

B

Dixon

OREGON	OEM No.	Length	Center	Outer	C to C	W / T	Off	Lift	Prod. Code
195-032	532138971	**21**	5 pt. Star			2.25/.149	1/8	1-1/16	Xtended 100
(2) for 42" cut									
195-039		21	5 pt. Star	5/16	3-1/8	2.25/.187	1/8	1-1/18	Xtended 100
(2) for 42" cut, heavy-duty version of 195-032									
195-048	510417901	21	5 pt. Star	5/16	3-1/8	2.25/.187	0	3/4	Xtended 100
(2) for 42" cut, sand									
195-005		21	5 pt. Star			2.25/.134	1/8	7/8	Xtended 100
(2) for 42" cut, mulching									
195-019	532134149	21	5 pt. Star			2.25/.149	1/8	15/16	Xtended 100
(2) for 42" cut, heavy-duty version of 195-005									
95-086	13926 539119843	21	5 pt. Star			2.50/.203	0	1.000	
(2) for 42" cut									
96-900	539118038 539119852	21	5 pt. Star			2.50/.187	0	3/4	G3
Gator® G3™									
596-900		21	5 pt. Star			3.00/.164	0	1	High-Lift Xtended Fusion® G5
Gator G5™									
95-078	539105711	**21**	5/8			2.50/.250	0	1	
(3) for 60" cut									
91-628		21	5/8			3.00/.203	0	1-1/2	Xtended
(3) for 60" cut, high-lift									
91-596		21	5/8			2.50/.203	0	1	
(3) for 61" cut, mulching									
91-308		21	5/8			2.50/.203	0	1	
(3) for 60" cut									
91-209		21	5/8			2.50/.250	0	1	Xtended
(3) for 60" cut									
91-626		21	5/8			2.50/.203	0	1	
(3) for 60" cut									

GROUP CONTINUES

B

Blades - OEM Replacements

Dixon

	OREGON	OEM No.	Length	Center	Outer	C to C	W / T	Off	Lift	Prod. Code
			GROUP CONTINUES							
(3) for 60" cut	**91-638**		21	5/8			2.50/.203	0	1	
Gator® G3™	**96-347**	522829301 522936601 539109755 574481301	21	5/8			2.50/.203	0	3/4	G3
Gator G5™	**596-347**		21	5/8			3.00/.203	0	1	High-Lift Xtended Fusion® G5
Gator G6®	**396-727**		21	5/8			3.00/.250	0	1	Heavy-Duty High-Lift Xtended Fusion® G6
21" cut, walk-behind	**95-057**	532106712	**21**	5/8	3/8	1-7/8	2.75/.134	1/2	1-9/16	
21" cut, walk-behind	**95-071**		21	5/8	3/8	1-7/8	2.75/.134	1/2	1-1/8	
21" cut, walk-behind, mulching	**195-067**		21	5/8	3/8	1-7/8	2.25/.134	9/16	1-1/16	Xtended 100
Gator® G3™	**95-621**		21	5/8	3/8	1-7/8	2.50/.187	1/2	3/4	G3
Gator G5™	**595-621**		21	5/8	3/8	1-7/8	3.00/.149	1/2	1	High-Lift Xtended Fusion® G5
22" Walk behind D149F22 and D160H22	**95-076**	420463 421825 532420463 532421825 532437601 917532420463 917532421825	**21-15/16**	5 pt. Star			2.25/.134	9/16	13/16	
Gator G3	**95-615**	580244001 585587701	21-15/16	5 pt. Star			2.25/.134	9/16	3/4	G3

B

Dixon

OREGON	OEM No.	Length	Center	Outer	C to C	W / T	Off	Lift	Prod. Code
195-070 (2) for 46" cut, high-lift	532405380	**22-7/8**	5 pt. Star	5/16	3-15/16	2.75/.164	5/16	1-1/8	Xtended — 100
95-074 (2) for 46" cut, mulching		22-7/8	5 pt. Star			2.25/.149	1/8	15/16	Xtended
96-370 Gator G3		22-7/8	5 pt. Star			2.75/.187	1/4	3/4	Xtended — G3
596-370 Gator G5		22-7/8	5 pt. Star			3.00/.187	5/16	1	High-Lift Xtended Fusion® — G5
91-627 (3) for 72" cut	12339 13923 13961 539118957 539119841 539119876	**24-1/2**	5/8			2.50/.203	0	1	Xtended
92-035 (3) for 72" cut, high-lift		24-1/2	5/8			3.00/.250	0	1-3/16	
96-341 Gator® G3™	12452 12509 13871 13962 13963 13998 539119802 539119877 539119909	24-1/2	5/8			2.50/.203	0	3/4	G3
596-341 Gator G5™		24-1/2	5/8			3.00/.203	0	1	High-Lift Xtended Fusion® — G5
396-764 Gator G6®		24-1/2	5/8			3.00/.250	0	1	Heavy-Duty High-Lift Xtended Fusion® — G6
91-609 (3) for 72" cut		**25**	5/8			2.50/.250	0	1	
396-731 Gator G6	539105476	25	5/8			3.00/.250	0	1	Heavy-Duty High-Lift Xtended Fusion® — G6

B

Blades - OEM Replacements

Dixon

	OREGON	OEM No.	Length	Center	Outer	C to C	W / T	Off	Lift	Prod. Code
(1) for 30" cut	**595-807**	532419274	**29-5/8**	5 pt. Star			3.00/.149	5/16	1	G5
							High-Lift Xtended Fusion®			
Gator G3, 30" cut	**96-631**	2483 2484 539119844 539119845 539119846 6894	**29-15/16**	11/16			2.75/.203	9/16	3/4	G3

DR

(3) for 48" cut, Versa Pro Z	**91-620**	152871	**16-1/2**	5/8			2.50/.203	0	1	
							Xtended			
(3) for 48" cut, Versa Pro Z, high-lift	**91-621**		16-1/2	5/8			3.00/.203	0	1-1/2	
(3) for 48" cut, Versa Pro Z, mulching	**92-743**		16-1/2	5/8			2.50/.203	0	1	
							Xtended			
(3) for 48" cut, Versa Pro Z	**92-145**		16-1/2	5/8			2.50/.203	0	1	
(3) for 48" cut, Versa Pro Z	**92-036**		16-1/2	5/8			2.50/.250	0	1	
(3) for 48" cut, Versa Pro Z	**92-737**		16-1/2	5/8			2.50/.203	0	1-1/16	
							Xtended			
(3) for 48" cut, Versa Pro Z	**99-126**		16-1/2	5/8			2.50/.203	0	1-1/16	
Gator® G3™	**96-308**		16-1/2	5/8			2.50/.203	0	1	G3
Gator G5™	**596-308**		16-1/2	5/8			3.00/.203	0	1	G5
							High-Lift Xtended Fusion®			
Gator G6®	**396-735**		16-1/2	5/8			3.00/.250	0	1	G6
							Heavy-Duty High-Lift Xtended Fusion®			

B

DR

	OREGON	OEM No.	Length	Center	Outer	C to C	W / T	Off	Lift	Prod. Code
(3) for 52" cut, Versa Pro Z	**91-622**	225381	**18**	5/8			2.50/.203	0	1	Xtended
(3) for 52" cut, Versa Pro Z, high-lift	**91-623**		18	5/8			3.00/.203	0	1-1/2	Xtended
(3) for 52" cut, Versa Pro Z, low-lift	**91-235**		18	5/8			2.50/.250	0	7/8	Xtended
(3) for 52" cut, Versa Pro Z, mulching	**91-218**		18	5/8			2.50/.164	0	1	Xtended
(3) for 52" cut, Versa Pro Z, mulching	**91-335**		18	5/8			2.50/.203	0	1	Xtended
(3) for 52" cut, Versa Pro Z	**91-181**		18	5/8			2.50/.187	0	1	Xtended
(3) for 52" cut, Versa Pro Z	**91-184**		18	5/8			2.50/.250	0	1	Xtended
(3) for 52" cut, Versa Pro Z	**91-256**		18	5/8			2.50/.203	0	1	Xtended
(3) for 52" cut, Versa Pro Z	**91-312**		18	5/8			2.50/.203	0	1	Xtended
(3) for 52" cut, Versa Pro Z	**94-053**		18	5/8			2.50/.250	0	1	
(3) for 52" cut, Versa Pro Z	**91-637**		18	5/8			2.50/.203	0	1	
Gator® G3™	**96-344**		18	5/8			2.50/.203	0	3/4	G3
Gator G5™	**596-344**		18	5/8			3.00/.203	0	1	High-Lift Xtended Fusion® G5
Gator G6®	**396-726**		18	5/8			3.00/.250	0	1	Heavy-Duty High-Lift Xtended Fusion® G6

B

Blades - OEM Replacements

DR

	OREGON	OEM No.	Length	Center	Outer	C to C	W / T	Off	Lift	Prod. Code
(2) for 42" cut	**195-032**		**21**	5 pt. Star			2.25/.149	1/8	1-1/16	Xtended 100
(2) for 42" cut, heavy-duty version of 195-032	**195-039**		21	5 pt. Star	5/16	3-1/8	2.25/.187	1/8	1-1/18	Xtended 100
(2) for 42" cut	**195-048**		21	5 pt. Star	5/16	3-1/8	2.25/.187	0	3/4	Xtended 100
(2) for 42" cut	**95-086**		21	5 pt. Star			2.50/.203	0	1.000	
Gator® G3™	**96-900**	151691	21	5 pt. Star			2.50/.187	0	3/4	G3
Gator G5™	**596-900**		21	5 pt. Star			3.00/.164	0	1	High-Lift Xtended Fusion® G5
(3) for 48" cut, Versa Pro Z, low-lift	**91-207**		**24-1/2**	7/8			3.00/.250	0	1	

Dynamow

	OREGON	OEM No.	Length	Center	Outer	C to C	W / T	Off	Lift	Prod. Code
Gator G3 (3) for 72" cut	**96-724**		**24-3/4**	1/2			2.50/.250	1/2	1	G3

B

Can't find what you're looking for?
Try us online to search the latest products available.

OregonProducts.com

Encore

	OREGON	OEM No.	Length	Center	Outer	C to C	W / T	Off	Lift	Prod. Code
(3) for 42" cut	**91-265**	423029	**14-1/4**	5/8			2.50/.203 Xtended	0	1	
Gator® G3™	**96-324**	423014 423173 423210	14-1/4	5/8			2.50/.203 Xtended	0	1	G3
(3) for 48" cut, Xtreme	**91-266**	483035	**16-3/8**	5/8			2.50/.203 Xtended	0	1	
Gator G3	**96-328**	483049 483050	16-3/8	5/8			2.50/.203	0	1	G3
(3) for 52" cut	**91-622**	363291 481707 482462	**18**	5/8			2.50/.203 Xtended	0	1	
(3) for 52" cut, high-lift	**91-623**		18	5/8			3.00/.203 Xtended	0	1-1/2	
(3) for 52" cut, low-lift	**91-235**		18	5/8			2.50/.250 Xtended	0	7/8	
(3) for 52" cut, mulching	**91-218**		18	5/8			2.50/.164 Xtended	0	1	
(3) for 52" cut	**91-181**		18	5/8			2.50/.187 Xtended	0	1	
(3) for 52" cut	**91-184**		18	5/8			2.50/.250 Xtended	0	1	
(3) for 52" cut	**91-256**		18	5/8			2.50/.203 Xtended	0	1	
(3) for 52" cut	**91-312**		18	5/8			2.50/.203 Xtended	0	1	
(3) for 52" cut	**91-335**		18	5/8			2.50/.203 Xtended	0	1	
(3) for 52" cut	**94-053**		18	5/8			2.50/.250	0	1	

GROUP CONTINUES

Blades - OEM Replacements

Encore

	OREGON	OEM No.	Length	Center	Outer	C to C	W / T	Off	Lift	Prod. Code
			GROUP CONTINUES							
Gator® G3™	**96-344**		18	5/8			2.50/.203	0	3/4	G3
Gator G5™	**596-344**		18	5/8			3.00/.203	0	1	G5
							High-Lift Xtended Fusion®			
Gator G6™	**396-726**		18	5/8			3.00/.250	0	1	G6
							Heavy-Duty High-Lift Xtended Fusion®			
(3) for 52" cut	**92-030**	543293	**18**	15/16			2.50/.203	0	1	
							Xtended			
(3) for 52" cut, mulching	**92-027**		18	15/16			2.50/.203	0	1	
Gator G3	**96-322**		18	15/16			2.50/.203	0	1	G3
							Xtended			
Gator G5	**596-322**		18	15/16			3.00/.203	0	1	G5
							High-Lift Xtended Fusion®			
Gator G6	**396-322**		18	15/16			3.00/.250	0	1	G6
							Heavy-Duty High-Lift Xtended Fusion®			
(3) for 52" cut	**91-039**	823004	**18**	5/8			2.50/.203	1/2	1	
							Xtended			
(3) for 52" cut, high-lift	**93-010**		18	5/8			2.50/.203	1/2	1-1/8	
Gator G3	**93-601**		18	5/8			2.50/.203	1/2	3/4	G3
Gator G5	**593-601**		18	5/8			3.00/.203	1/2	1	G5
							High-Lift Xtended Fusion®			
(3) for 60" cut, all models	**91-259**	603035 604035	**20-1/4**	5/8			2.50/.203	0	1	
							Xtended			
Gator G5	**591-259**	603055 603056	20-1/4	5/8			3.00/.164	0	1	G5
							High-Lift Xtended Fusion®			

B

Encore

	OREGON	OEM No.	Length	Center	Outer	C to C	W / T	Off	Lift	Prod. Code
(3) for 60" cut	**92-031**	543294	**20-1/2**	15/16			2.50/.203	0	1	
							Xtended			
(3) for 60" cut, high-lift	**92-209**		20-1/2	15/16			3.00/.203	0	1-5/16	
(3) for 60" cut, mulching	**92-028**		20-1/2	15/16			3.00/.203	0	1-5/16	
							Xtended			
(3) for 60" cut	**92-082**		20-1/2	15/16			2.50/.203	0	1	
							Xtended			
(3) for 60" cut	**92-025**		20-1/2	15/16			2.50/.203	0	1	
							Xtended			
Gator® G3™	**96-749**		20-1/2	15/16			2.50/.203	0	1	
							Xtended			G3
Gator G5™	**596-749**		20-1/2	15/16			3.00/.203	0	1	
							High-Lift Xtended Fusion®			G5
Gator G6™	**392-025**		20-1/2	15/16			3.00/.250	0	1	
							Heavy-Duty High-Lift Xtended Fusion®			G6
(3) for 61" cut, high-lift, Prowler	**91-135**	823006	**21**	5/8			2.50/.203	1/2	1	
(3) for 61" cut, Prowler	**93-011**		21	5/8			2.50/.250	1/2	1-1/8	
							Xtended			
(3) for 61" cut, low-lift, Prowler	**93-013**		21	5/8			2.50/.250	1/2	5/8	
							Xtended			
Gator G3	**96-702**		21	5/8			2.50/.203	1/2	1	
										G3
Gator G5	**596-702**		21	5/8			3.00/.203	1/2	1	
							High-Lift Xtended Fusion®			G5
Gator G6	**396-702**		21	5/8			3.00/.250	1/2	1	
							Heavy-Duty High-Lift Xtended Fusion®			G6

B

Blades - OEM Replacements

Encore

	OREGON	OEM No.	Length	Center	Outer	C to C	W / T	Off	Lift	Prod. Code
(3) for 72" cut	**93-025**	583287	**24-15/16**	5/8			2.50/.250	1/2	1-1/4	

Everide

	OREGON	OEM No.	Length	Center	Outer	C to C	W / T	Off	Lift	Prod. Code
(3) for 48" cut	**92-054**	191107	**16-1/2**	9/16			2.50/.203	0	1	Xtended
Gator G3, (3) for 54" cut	**92-607**	181042	**19**	9/16			2.50/.203	0	3/4	G3
(3) for 60" cut	**91-482**	181026	**21**	9/16			2.50/.203	0	1	Xtended
Gator G5™	**592-608**		21	9/16			3.00/.203	0	1	High-Lift Xtended Fusion® G5

Exmark

	OREGON	OEM No.	Length	Center	Outer	C to C	W / T	Off	Lift	Prod. Code
(3) for 44" cut, Laser HP	**91-369**	103-2529 103-2529-S 1-653101	**15-1/4**	5/8			2.50/.203	0	1	Xtended
(3) for 44" cut, mulching	**91-373**	103-2519 103-2519-S 103-6390 103-6390-S 1-653102	15-1/4	5/8			2.50/.203	0	1	Xtended
Gator G3	**96-327**	103-1579 103-1579-S 103-2509 103-2509-S 103-6335 103-6335-S 116-5171 116-5171-S 1-653178 1-653179	15-1/4	5/8			2.50/.203	0	1	Xtended G3
Gator G5	**596-327**		15-1/4	5/8			3.00/.203	0	1	High-Lift Xtended Fusion® G5
Gator® G5™, (2) for 30" cut, ECKA30 walk-behind	**594-601**	116-6358 116-6358-03 116-6358-S	**15-3/8**	5/8	5/16	1-1/4	3.00/.134	5/16	1	High-Lift Xtended Fusion® G5

Exmark

	OREGON	OEM No.	Length	Center	Outer	C to C	W / T	Off	Lift	Prod. Code
(3) for 48" cut, (2) for 32" cut Turf Tracer, HP Metro and Viking	**91-313**	103-2527 103-6583 103-6583-S 1-323515 1-403026 1-403059 323515 E323515	**16-1/4**	5/8			2.50/.203	0	1	
(3) for 48" cut, (2) for 32" cut	**91-180**		16-1/4	5/8			2.50/.187	0	1	
(3) for 48" cut, (2) for 32" cut, heavy-duty	**91-183**		16-1/4	5/8			2.50/.250	0	1	
(3) for 48" cut, (2) for 32" cut	**99-127**	103-1577 103-1577-S 1-413438	16-1/4	5/8			2.50/.203	0	1-1/16	
(3) for 48" cut, (2) for 32" cut, mulching	**91-368**	103-2517 103-6581 103-6581-S 1-403086 1-403148	16-1/4 403086 403148	5/8			2.50/.203 Xtended	0	1	
Gator G3™	**96-310**	103-2507 103-6336 103-6336-S 103-6401 103-6401-S 103-6738 103-6738-S 109-6389 109-6389-S 109-6391	16-1/4 109-6391-S 116-5178 116-5178-S 1-403075 1-403149 403149 E403149	5/8			2.50/.203	0	3/4	G3
Gator G5	**596-310**		16-1/4	5/8			3.00/.203 High-Lift Xtended Fusion®	0	1	G5
Gator G6™	**396-716**		16-1/4	5/8			3.00/.250 Heavy-Duty High-Lift Xtended Fusion®	0	1	G6
(2) blades for 32" deck, 3 blades for 48" deck, low lift	**92-919** NEW	103-6386-S	**16-1/4**	15/16			3.00/.203	0	5/8	
(3) for 48" cut	**92-029**	103-6401 103-6401-S	16-1/4	15/16			2.50/.203 Xtended	0	1	
(3) for 48" cut, mulching	**92-026**	103-6391 103-6391-S	16-1/4	15/16			2.50/.203 Xtended	0	1	

GROUP CONTINUES

Blades - OEM Replacements

Exmark

GROUP CONTINUES

	OREGON	OEM No.	Length	Center	Outer	C to C	W / T	Off	Lift	Prod. Code
Gator® G3™	**96-321**	103-6381 103-6381-S 103-6396 103-6396-S 116-5177 116-5177-S	16-1/4	15/16			2.50/.203	0	1	G3
Gator G5™	**596-321**		16-1/4	15/16			3.00/.203	0	1	High-Lift Xtended Fusion® G5
Gator G6™	**396-321**		16-1/4	15/16			3.00/.250	0	1	Heavy-Duty High-Lift Xtended Fusion® G6
(3) for 46" cut, Triton	**492-726**	103-8370 103-8370-S	**16-1/4**	15/16			3.00/.203	3/8	1-1/16	Fusion®
Gator G6	**392-205**	103-8250 103-8250-S 103-8251 103-8251-S 103-8288 103-8288-S 103-8296 103-8296-S 103-8420	16-1/4 103-8420-S 103-8433 103-8433-S 103-9614-S 109-6460 109-6460-S	15/16	 109-6466 109-6466-S 109-9390 109-9390-S 116-5496-S		3.00/.250	3/8	1	Heavy-Duty High-Lift Xtended Fusion® G6
(3) blades for 50" deck, high-lift	**92-912** NEW	103-6461	**17-1/2**	15/16			3.00/.203	3/8	1	
(3) for 50" cut, high-lift, Quest	**94-128**	115-5059-03	**17-1/2**	5/8			2.25/.164	5/16	1-1/4	
Gator G5	**594-078**		17-1/2	5/8			3.00/.164	3/8	1	High-Lift Xtended Fusion® G5
(3) for 50" cut, high-lift, Triton	**492-731**	103-9601 103-9601-S 103-9605 103-9605-S 109-6461-S	**17-1/2**	15/16			3.00/.203	3/8	1-1/16	Fusion®
Gator® G6™	**392-206**	103-9599 103-9599-S 103-9600-S 103-9610-S 103-9615-S 109-5876 109-5876-S	17-1/2 109-6467 109-6467-S 109-9391-S 116-5497-S	15/16			3.00/.250	3/8	1	Heavy-Duty High-Lift Xtended Fusion® G6

B

Exmark

	OREGON	OEM No.	Length	Center	Outer	C to C	W / T	Off	Lift	Prod. Code
(3) for 52" cut, Turf Tracer	**91-170**	103-3229 1-603637	**18**	1/2			2.50/.203 Xtended	0	1	
(2) for 36" cut, (3) for 52" cut, Laser Z, Metro, Turf Ranger, Turf Tracer, Viking	**91-181**	103-2508 103-2508-S 1-633485 633485 E633485	**18**	5/8			2.50/.187 Xtended	0	1	
(2) for 36" cut, (3) for 52" cut	**93-006**		18	5/8	1/4	1-5/8	2.50/.250 Xtended	0	1-3/16	
(2) for 36" cut, (3) for 52" cut, heavy-duty	**91-184**	303283	18	5/8			2.50/.250 Xtended	0	1	
(2) for 36" cut, (3) for 52" cut, Turf Tracer, Turf Ranger & Lazer Z	**91-312**	103-2528 103-6584 103-6584-B 103-6584-M 103-6584-S 1-303146	18 1-303283 1-633482 633482 E633482	5/8			2.50/.203 Xtended	0	1	
(2) for 36" cut, (3) for 52" cut	**91-256**	103-1578 103-1578-S 1-303527 303527	18	5/8			2.50/.203 Xtended	0	1	
(2) for 36" cut, (3) for 52" cut, mulching	**91-218**		18	5/8			2.50/.164 Xtended	0	1	
(2) for 36" cut, (3) for 52" cut, mulching	**91-335**	103-2518 103-6582 103-6582-B 103-6582-M 103-6582-S	18 1-303495 1-633484 633484	5/8			2.50/.203 Xtended	0	1	
Gator® G3™	**96-344**	103-6337-S 103-6580 103-6580-S 116-5176-S	18	5/8			2.50/.203	0	3/4	G3
Gator G5™	**596-344**		18	5/8			3.00/.203 High-Lift Xtended Fusion®	0	1	G5
Gator G6™	**396-726**		18	5/8			3.00/.250 Heavy-Duty High-Lift Xtended Fusion®	0	1	G6

B

Blades - OEM Replacements

Exmark

	OREGON	OEM No.	Length	Center	Outer	C to C	W / T	Off	Lift	Prod. Code
(3) for 52" cut	**92-030**	103-6402 103-6402-S 109-6873	**18**	15/16			2.50/.203	0	1	Xtended
(3) for 52" cut, mulching	**92-027**	103-6392 103-6392-S	18	15/16			2.50/.203	0	1	
Gator G3	**96-322**	103-6382 103-6382-S 103-6387 103-6387-S 103-6397 103-6397-S 116-5175 116-5175-S 116-5176 116-5176-S	18	15/16			2.50/.203	0	1	Xtended G3
Gator G5	**596-322**		18	15/16			3.00/.203	0	1	High-Lift Xtended Fusion® G5
Gator G6	**396-322**		18	15/16			3.00/.250	0	1	Heavy-Duty High-Lift Xtended Fusion® G6
(3) for 54" cut, Quest	**94-070**		**18-3/4**	5/8			2.25/.164	5/16	7/8	
(3) for 54" cut, high-lift, Quest	**94-060**		18-3/4	5/8			2.25/.164	5/16	1-1/8	G3
Gator G3	**96-803**	115-2454-03	18-3/4	5/8			2.25/.164	5/16	3/4	G3
Gator G6	**396-803**		18-3/4	5/8			3.00/.250	5/16	1	Heavy-Duty High-Lift Xtended Fusion® G6
(3) for 56" cut, notched blade, high-lift	**92-913** NEW	109-6462-S	**19-1/2**	15/16			3.00/.203	3/8	1	
(3) for 60" cut, Explorer	**91-259**	1-513972 513972	**20-1/4**	5/8			2.50/.203	0	1	Xtended
Gator G5™	**591-259**		20-1/4	5/8			3.00/.164	0	1	High-Lift Xtended Fusion® G5

B

Exmark

	OREGON	OEM No.	Length	Center	Outer	C to C	W / T	Off	Lift	Prod. Code
Gator G3 (1) for 21" cut, walk-behind	**96-810**	116-4500 116-4500-03 116-4500-S	**20-1/2**	7/16	3/8	2.5	2.25/.134	7/16	3/4	G3
(3) for 60" cut, Turf Tracer models	**91-188**	103-3233 103-3233-S 1-603283 603283	**20-1/2**	1/2			2.50/.203	0	1	
							Xtended			
(3) for 60" cut, Turf Tracer models	**94-072**	103-3231 1-603874 603874	20-1/2	1/2			2.50/.250	0	3/4	
(3) for 60" cut, mulcher	**91-217**	103-3231 1-603874 603874	20-1/2	1/2			2.50/.203	0	1	
Gator G6™	**396-739**		20-1/2	1/2			3.00/.250	0	1	
							Heavy-Duty High-Lift Xtended Fusion®			G6
(3) for 60" cut, Lazer Z	**91-264**	103-2530 103-2530-B 103-2530-M 103-2530-S 1-633483 633483	**20-1/2**	5/8			2.50/.203	0	1	
							Xtended			
(3) for 60" cut, low-lift, Lazer Z	**91-378**	103-2510 103-2510-S 1-613111 613111	20-1/2	5/8			2.50/.203	0	5/8	
(3) for 60" cut, heavy-duty, Lazer Z	**91-506**		20-1/2	5/8			2.50/.250	0	1-3/16	
							Xtended			
(3) for 60" cut, mulching, Lazer Z	**91-311**	103-0301 103-0301-B 103-0301-M 103-0301-S 1-613112	20-1/2	5/8			2.50/.203	0	1	
							Xtended			
Gator® G3™	**96-319**	103-1580 103-1580-B 103-1580-M 103-1580-S	20-1/2	5/8			2.50/.203	0	3/4	G3
Gator G5™	**596-319**		20-1/2	5/8			3.00/.203	0	1	
							High-Lift Xtended Fusion®			G5
Gator G6™	**396-740**		20-1/2	5/8			3.00/.250	0	1	
							Heavy-Duty High-Lift Xtended Fusion®			G6

B

Blades - OEM Replacements

Exmark

	OREGON	OEM No.	Length	Center	Outer	C to C	W / T	Off	Lift	Prod. Code
(3) for 60" cut, Bahia Mowers	**92-025**	103-6383 103-6383-S	**20-1/2**	15/16			2.50/.203	0	1 Xtended	
(3) for 60" cut	**92-031**	103-6403 103-6403-S	20-1/2	15/16			2.50/.203	0	1 Xtended	
(3) for 60" cut, high-lift	**92-209**		20-1/2	15/16			3.00/.203	0	1-5/16	
(3) for 60" cut, low-lift	**92-082**	103-6388 103-6388-S	20-1/2	15/16			2.50/.203	0	1 Xtended	
(3) for 60" cut, mulching, Lazer Z	**92-028**	103-6393 103-6393-S	20-1/2	15/16			3.00/.203	0	1-5/16 Xtended	
Gator G3	**96-749**	103-6398 103-6398-S 116-5174 116-5174-S	20-1/2	15/16			2.50/.203	0	1 Xtended	G3
Gator® G5™	**596-749**		20-1/2	15/16			3.00/.203	0	1 High-Lift Xtended Fusion®	G5
Gator G6™	**392-025**		20-1/2	15/16			3.00/.250	0	1 Heavy-Duty High-Lift Xtended Fusion®	G6
(3) for 60" cut, Triton	**492-730**	103-8244 103-8244-S 103-8432 103-8432-S 109-6463 109-6463-S	**20-11/16**	15/16			3.00/.203	3/8	1-1/16 Fusion®	
Gator G6	**392-201**	103-8107 103-8107-S 103-8239 103-8239-S 103-8240 103-8240-S 103-8396 103-8396-S	20-11/16	15/16	103-8431 103-8431-S 103-9629-S 109-5396 109-5396-S	109-6466 109-6466-S 109-9393-S 116-5494	3.00/.250	3/8	1 Heavy-Duty High-Lift Xtended Fusion®	G6

B

Exmark

	OREGON	OEM No.	Length	Center	Outer	C to C	W / T	Off	Lift	Prod. Code
(1) for 21" cut, walk-behind mower	**94-051**	108-3762-03 108-3762-03P 108-3762-S	**20-7/8**	7/16	3/8	2-1/2	2.25/.149	7/16	7/8	
Gator G3	**96-660**	108-0954 108-0954-03 108-0954-S	20-7/8	7/16	3/8	2-1/2	2.25/.134	7/16	1	G3
(1) for 21" cut, metro, walk-behind mower	**94-017**	107-4276 107-4276-S 42-1000 42-1000-S	**21**	7/16	3/8	2-7/16	2.25/.134	5/16	7/8	
Gator G6 (2) for 42" cut	**394-129**	131-3939-03	**21-9/16**	5/8			3.00/.250	5/16	1	Heavy-Duty High-Lift Xtended Fusion® G6
(2) for 42" cut, Quest	**94-069**	110-6568-03 117-5372-03	21-9/16	5/8			2.25/.164	5/8	1-1/4	
(2) for 42" cut, mulcher	**94-068**		21-9/16	5/8			2.25/.164	9/16	13/16	
Gator® G3™	**96-362**		21-9/16	5/8			2.25/.187	5/8	3/4	G3
Gator G5™	**596-362**		21-9/16	5/8			3.00/.187	5/8	1	High-Lift Xtended Fusion® G5
(2) for 42" deck, Navigator rear bagger, RHC	**92-921** NEW	103-4210	22	7/8	1/4	3	2.75/.164	11/16	13/16	

B

Can't find what you're looking for?
Try us online to search the latest products available.

OregonProducts.com

Blades - OEM Replacements

Exmark

	OREGON	OEM No.	Length	Center	Outer	C to C	W / T	Off	Lift	Prod. Code
(3) for 66" cut, high-lift, Triton	**492-732**	103-9618 103-9618-S 103-9620 103-9620-S 103-9818-S 109-6464 109-6464-S	**22-11/16**	15/16			3.00/.203 Fusion®	3/8	1-1/16	
Gator G6™	**392-203**	103-9612-S 103-9616 103-9616-S 103-9619 103-9619-S 103-9621 103-9621-S 103-9630 103-9630-S	22-11/16 109-5878 109-5878-S 109-6466 109-6466-S 109-9394-S 116-5500-S	15/16			3.00/.250 Heavy-Duty High-Lift Xtended Fusion®	3/8	1	G6
(3) for 72" cut, Lazer Z	**91-374**	103-2531 103-2531-B 103-2531-M 103-2531-S 1-643006 643006	**24-3/8**	5/8			3.00/.203 Xtended	0	1-1/4	
Gator G3	**96-699**	103-6339 103-6339-S 109-9395-S 116-5172 116-5172-S	24-3/8	5/8			3.00/.203	0	3/4	G3
(3) for 72" cut, Lazer Z, Turf Ranger	**92-057**	103-6384 103-6384-S	24-1/2	15/16			3.00/.203 Xtended	0	1	
(3) for 72" cut, high-lift, Lazer Z, Turf Ranger for 92-033	**92-033**	103-6404 103-6404-S	24-1/2	15/16			3.00/.203 Xtended	0	1-1/4	
(3) for 72" cut, mulching, Lazer Z, Turf Ranger	**92-084**	103-6394 103-6394-S	24-1/2	15/16			3.00/.203 Xtended	0	1-3/16	

GROUP CONTINUES

Exmark

	OREGON	OEM No.	Length	Center	Outer	C to C	W / T	Off	Lift	Prod. Code
Gator® G5™	**592-033**	103-6399 103-6399-S 116-5171 116-5171-S	24-1/2	15/16			3.00/.203	0	1	High-Lift Xtended Fusion® G5
Gator G6™	**392-057**		24-1/2	15/16			3.00/.250	0	1	Heavy-Duty High-Lift Xtended Fusion® G6
(3) blades for 72" deck, high-lift	**92-910** NEW	109-6465-S	**24-11/16**	15/16			3.00/.203	3/8	1	
Gator G6	**392-204**	103-9395-S 103-9613-S 103-9622 103-9622-S 103-9624 103-9624-S 103-9625 103-9625-S 103-9626	24-11/16	15/16			3.00/.250	3/8	1	Heavy-Duty High-Lift Xtended Fusion® G6
		103-9626-S 103-9631 103-9631-S 109-5879 109-5879-S 109-6465								
		109-6465-S 109-6471 109-6471-S 116-5501 116-5501-S								
(1) 92-167 & (1) 92-168 for 48" cut, left-hand cut, Navigator	**92-167**	103-4208	**25**	7/8	1/4	3	2.75/.164	1-1/16	13/16	
(1) 92-167 & (1) 92-168 for 48" cut, Navigator	**92-168**	103-4207 130-2861	**25**	7/8	1/4	3	2.75/.164	1-1/16	13/16	

Ferris

(3) for 44" cut	**91-608**	5061827S	**15**	5/8			2.50/.250	0	1	
Gator® G6™ - (will not fit ICD decks)	**391-608**		15	5/8			3.00/.250	0	1	Heavy-Duty High-Lift Xtended Fusion® G6
(3) for 48" cut	**91-183**	20843 20843S 5020843 5020843S 5020843X2	**16-1/4**	5/8			2.50/.250	0	1	
(3) for 48" cut	**91-180**		16-1/4	5/8			2.50/.187	0	1	
(3) for 48" cut	**91-313**	5101986 5101986S	16-1/4	5/8			2.50/.203	0	1	

GROUP CONTINUES

Blades - OEM Replacements

Ferris

	OREGON	OEM No.	Length	Center	Outer	C to C	W / T	Off	Lift	Prod. Code
			GROUP CONTINUES							
(3) for 48" cut	**99-127**		16-1/4	5/8			2.50/.203	0	1-1/16	
(3) for 48" cut, mulching	**91-368**	5103303S 5103303X2	16-1/4	5/8			2.50/.203	0	1	Xtended
Gator G3™	**96-310**		16-1/4	5/8			2.50/.203	0	3/4	G3
Gator G5™ (will not fit ICD decks)	**596-310**		16-1/4	5/8			3.00/.203	0	1	High-Lift Xtended Fusion® G5
Gator G6 (will not fit ICD decks)	**396-716**		16-1/4	5/8			3.00/.250	0	1	Heavy-Duty High-Lift Xtended Fusion® G6
(2) for 36" cut, (3) for 52" cut, low-lift	**91-235**	21227S 5021227 5021227S 5021227X2	**18**	5/8			2.50/.250	0	7/8	Xtended
(3) for 52" cut, (2) for 36" cut, high-lift (will not fit ICD decks)	**91-623**	481711 A48185	18	5/8			3.00/.203	0	1-1/2	Xtended
(2) for 36" cut, (3) for 52" cut, mulching	**91-218**		18	5/8			2.50/.164	0	1	Xtended
(2) for 36" cut, (3) for 52" cut, mulching	**91-335**	5103304S 5103304X2	18	5/8			2.50/.203	0	1	Xtended
(2) for 36" cut, (3) for 52" cut	**91-256**		18	5/8			2.50/.203	0	1	Xtended
(2) for 36" cut, (3) for 52" cut	**91-181**		18	5/8			2.50/.187	0	1	Xtended
(2) for 36" cut, (3) for 52" cut	**91-184**		18	5/8			2.50/.250	0	1	Xtended
(2) for 36" cut, (3) for 52" cut	**93-006**		18	5/8	1/4	1-5/8	2.50/.250	0	1-3/16	Xtended
			GROUP CONTINUES							

Ferris

	OREGON	OEM No.	Length	Center	Outer	C to C	W / T	Off	Lift	Prod. Code
			GROUP CONTINUES							
(2) for 36" cut, (3) for 52" cut	**91-312**	5101756S 5101756X2	18	5/8			2.50/.203	0	1	
							Xtended			
(2) for 36" cut, (3) for 52" cut	**91-622**		18	5/8			2.50/.203	0	1	
							Xtended			
(2) for 36" cut, (3) for 52" cut	**91-637**		18	5/8			2.50/.203	0	1	
(2) for 36" cut, (3) for 52" cut	**94-053**		18	5/8			2.50/.250	0	1	
Gator® G3™	**96-344**		18	5/8			2.50/.203	0	3/4	G3
Gator G5™ (will not fit ICD decks)	**596-344**		18	5/8			3.00/.203	0	1	
							High-Lift Xtended Fusion®			G5
Gator G6™ (will not fit ICD decks)	**396-726**		18	5/8			3.00/.250	0	1	
							Heavy-Duty High-Lift Xtended Fusion®			G6
(3) for 61" cut, 1000Z, IS2000Z, IS3100Z, IS4500Z, IS5100Z, PCM4818K, PCM6118K, PCM61200, PCT4818B, PCT6118B, PCW6114K, R61R	**91-209**	20842 20842s 5020842 5020842s 5101755 5101755BM 5101755S 5101755YP	**21**	5/8			2.50/.250	0	1	
							Xtended			
(3) for 61" cut, 1000Z, IS2000Z, IS3100Z, IS4500Z, IS5100Z, PCM4818K, PCM6118K, PCM61200, PCT4818B, PCT6118B, PCW6114K, R61R	**91-628**	481712 A48304	21	5/8			3.00/.203	0	1-1/2	
							Xtended			
(3) for 61" cut, 1000Z, IS2000Z, IS3100Z, IS4500Z, IS5100Z, PCM4818K, PCM6118K, PCM61200, PCT4818B, PCT6118B, PCW6114K, R61R	**91-308**		21	5/8			2.50/.203	0	1	
(3) for 61" cut, 1000Z, IS2000Z, IS3100Z, IS4500Z, IS5100Z, PCM4818K, PCM6118K, PCM61200, PCT4818B, PCT6118B, PCW6114K, R61R	**91-626**		21	5/8			2.50/.203	0	1	

GROUP CONTINUES

Blades - OEM Replacements

Ferris

	OREGON	OEM No.	Length	Center	Outer	C to C	W / T	Off	Lift	Prod. Code
			GROUP CONTINUES							
	91-638		21	5/8			2.50/.203	0	1	
(3) for 61" cut, 1000Z, IS2000Z, IS3100Z, IS4500Z, IS5100Z, PCM4818K, PCM6118K, PCM61200, PCT4818B, PCT6118B, PCW6114K, R61R										
	95-078		21	5/8			2.50/.250	0	1	
(3) for 61" cut, 1000Z, IS2000Z, IS3100Z, IS4500Z, IS5100Z, PCM4818K, PCM6118K, PCM61200, PCT4818B, PCT6118B, PCW6114K, R61R										
	91-596		21	5/8			2.50/.203	0	1	
(3) for 61" cut, mulching, 1000Z, IS2000Z, IS3100Z, IS4500Z, IS5100Z, PCM4818K, PCM6118K, PCM61200, PCT4818B, PCT6118B, PCW6114K, R61R										
	96-347	5103305S	21	5/8			2.50/.203	0	3/4	G3
Gator® G3™										
	596-347		21	5/8			3.00/.203	0	1	G5
							High-Lift Xtended Fusion®			
Gator G5™ (will not fit ICD decks)										
	396-727		21	5/8			3.00/.250	0	1	G6
							Heavy-Duty High-Lift Xtended Fusion®			
Gator G6™ (will not fit ICD decks)										
	91-627	48112 48113 481709	**24-1/2**	5/8			2.50/.203	0	1	
							Xtended			
(3) for 72" cut										
	92-035	48112 48113 481709	24-1/2	5/8			3.00/.250	0	1-3/16	
(3) for 72" cut										
	96-341		24-1/2	5/8			2.50/.203	0	3/4	G3
Gator® G3™										
	596-341		24-1/2	5/8			3.00/.203	0	1	G5
							High-Lift Xtended Fusion®			
Gator G5™ (will not fit ICD decks)										
	396-764		24-1/2	5/8			3.00/.250	0	1	G6
							Heavy-Duty High-Lift Xtended Fusion®			
Gator G6™ (will not fit ICD decks)										
	91-609	5102227S	**25**	5/8			2.50/.250	0	1	
(3) for 72" cut										
	396-731		25	5/8			3.00/.250	0	1	G6
							Heavy-Duty High-Lift Xtended Fusion®			
Gator G6										

B

Ford / New Holland

	OREGON	OEM No.	Length	Center	Outer	C to C	W / T	Off	Lift	Prod. Code
(3) for 42" cut	**91-342**	330721CJ 500904	**14-7/8**	7/16	1/2	1-5/8	2.00/.149	1/4	13/16	
(3) for 48" cut	**91-806**	TR106637	**16-1/16**	3/4			2.00/.203	0	15/16	
Gator G3	**90-644**	TR94D9776	16-1/16	3/4			2.50/.203	0	3/4	G3
(3) for 72" cut, CM274	**91-207**	160191 84521624	**24-1/2**	7/8			3.00/.250	0	1	
Gator G3 — (3) for 72" cut	**96-624**	163442	**24-7/8**	7/8			3.00/.203	13/16	3/4	G3

Giant Vac

	OREGON	OEM No.	Length	Center	Outer	C to C	W / T	Off	Lift	Prod. Code
(2) for 32" cut, (3) for 48" cut	**93-005**	21537 3021537 3021584	**16-1/4**	5/8	1/4	1-5/8	2.50/.250	0	1-3/16	
Gator® G3™	**96-310**		16-1/4	5/8			2.50/.203	0	3/4	G3
Gator G5™	**596-310**		16-1/4	5/8			3.00/.203	0	1	High-Lift Xtended Fusion® G5
Gator G6™	**396-716**		16-1/4	5/8			3.00/.250	0	1	Heavy-Duty High-Lift Xtended Fusion® G6
(2) for 36" cut, (3) for 52" cut	**93-006**	21536 3021536	**18**	5/8	1/4	1-5/8	2.50/.250	0	1-3/16	Xtended
Gator G3	**96-344**		18	5/8			2.50/.203	0	3/4	G3
Gator G5	**596-344**		18	5/8			3.00/.203	0	1	High-Lift Xtended Fusion® G5
Gator G6	**396-726**		18	5/8			3.00/.250	0	1	Heavy-Duty High-Lift Xtended Fusion® G6

B

Blades - OEM Replacements

Giant Vac

	OREGON	OEM No.	Length	Center	Outer	C to C	W / T	Off	Lift	Prod. Code
(3) for 61" cut	**93-008**	21538 3021538	**21**	5/8	1/4	1-5/8	2.50/.250 Xtended	0	1-3/16	
(3) for 61" cut, mulching	**91-596**		21	5/8			2.50/.203	0	1	
Gator G3	**96-347**		21	5/8			2.50/.203	0	3/4	G3
Gator G5	**596-347**		21	5/8			3.00/.203 High-Lift Xtended Fusion®	0	1	G5
Gator G6	**396-727**		21	5/8			3.00/.250 Heavy-Duty High-Lift Xtended Fusion®	0	1	G6

Grasshopper

	OREGON	OEM No.	Length	Center	Outer	C to C	W / T	Off	Lift	Prod. Code
(3) for 44" cut, (1) 91-557 & (2) 91-558 for 48" cut	**91-557**	320231	**15**	1/2			2.50/.250	5/16	3/4	
(3) for 44" cut, (1) 91-536 & (2) 91-532 for 48" cut, high-lift	**91-536**	320234	15	1/2			2.50/.250	5/16	1	
(3) for 44" cut	**92-150**		15	1/2			2.50/.203	5/16	1-1/4	
Gator® G3™	**96-343**	320233 320235 320320	15	1/2			2.50/.203 Xtended	5/16	1	G3
Gator G6™	**396-713**		15	1/2			3.00/.250 Heavy-Duty High-Lift Xtended Fusion®	5/16	1	G6
(3) for 52" cut, (2) 91-558 & (1) 91-557 for 48" cut	**91-558**	320236	**18**	1/2			2.50/.250	5/16	3/4	
(3) for 52" cut, contour blade	**91-535**	320238	18	1/2			2.50/.250	5/16	1-3/16	
(3) for 52" cut, (2) 91-532 & (1) 91-536 for 48" cut, high-lift	**91-532**	320239	18	1/2			2.50/.250	5/16	1	

GROUP CONTINUES

B

Grasshopper

	OREGON	OEM No.	Length	Center	Outer	C to C	W / T	Off	Lift	Prod. Code
(3) for 52" cut, mulching	**91-538**	320240	18	1/2			2.50/.203	0	1	
Gator G3	**96-329**	320241 320321	18	1/2			2.50/.203	5/16	1	G3
Gator G5™	**596-329**		18	1/2			3.00/.203	5/16	1	High-Lift Xtended Fusion® G5
Gator G6	**396-729**		18	1/2			3.00/.250	5/16	1	Heavy-Duty High-Lift Xtended Fusion® G6
(3) for 61" cut, (2) for 41" cut, high-lift	**91-531**	320243 320245 320245B	**21**	1/2			2.50/.250	5/16	1	
(3) for 61" cut, (2) for 41" cut, high-lift	**91-534**	320244	21	1/2			2.50/.250	5/16	1-3/16	
(3) for 61" cut, (2) for 41" cut, extreme high-lift	**91-537**	320246	21	1/2			3.00/.250	5/16	1-1/4	
(3) for 61" cut, (2) for 41" cut, low-lift	**91-547**	320242	21	1/2			2.50/.250	5/16	3/4	
(3) for 61" cut, (2) for 41" cut, mulching	**91-539**	320247	21	1/2			2.50/.203	0	1	
Gator® G3™	**96-346**	320322	21	1/2			2.50/.203	5/16	1	G3
Gator G5™	**596-346**		21	1/2			3.00/.203	5/16	1	High-Lift Xtended Fusion® G5
Gator G6™	**396-712**		21	1/2			3.00/.250	5/16	1	Heavy-Duty High-Lift Xtended Fusion® G6
(3) for 72" cut, high-lift	**91-533**	320251 320253	**25**	1/2			2.50/.250	5/16	1	
(3) for 72" cut, low-lift	**91-544**	320250	25	1/2			2.50/.250	5/16	3/4	

GROUP CONTINUES

Blades - OEM Replacements

Grasshopper

	OREGON	OEM No.	Length	Center	Outer	C to C	W / T	Off	Lift	Prod. Code
	91-036	320255	25	1/2			2.50/.250	1/4	1-1/16	
(3) for 72" cut, mulching							Xtended			
	92-164		25	1/2			2.50/.203	0	1	
(3) for 72" cut										
	96-778	320254	25	1/2			2.50/.250	5/16	3/4	G3
Gator G3										
	396-778	320252 320323	25	1/2			3.00/.250	5/16	1	G6
Gator G6							Heavy-Duty High-Lift Xtended Fusion®			

Gravely

	92-040	03498400 08899800	**13-7/8**	5/8			2.00/.203	1/8	1-1/16	
(3) for 40" cut, (915035) (915051) (915075) Zoom1640, (915043) (915063) (915065) (915317) (915502) Zoom1540, (915063) 1540Mini Zoom, 915067 Zoom1740, (915077) (915087-000101 HVZ) (915087) (915103) (915600) Zoom1840, 915133 Zoom2040							Xtended			
	91-244	014668	13-7/8	5/8			2.00/.203	1/8	1-1/16	
(3) for 40" cut, high-lift, 31220, 34427, 38685, 39000, 45810, (49225) (51973) (834026) (834030) GEM, 885005, 887020, 887029, (915034) (915074) ZT1640, (915042) (915042) ZT1540, (915044) ZT1740, 915076 ZT1840, 991003 PM100Z, 91005-000101 PROMASTER100										
	96-040	00272800 01600500	13-7/8	5/8			2.25/.203	0	3/4	G3
Gator® G3™										
	92-217	02961600	**14-1/2**	5/8			2.50/.203	5/16	1-1/8	
(3) for 42" cut										
	96-808		14-1/2	5/8			2.50/.203	5/16	3/4	G3
Gator G3										
	92-153	00450200 02982000	**16-3/16**	5/8			2.50/.250	5/16	1-1/8	
(3) for 44" and 48" cut, Compact Pro, Pro Master 44Z, 48Z, 144H, 148H, 144i, 148i, 144M, 148M, 144XDZ, 148XDZ, Pro Turn 148, ZT 2344, 2348, 2644HD, 2648HD										

GROUP CONTINUES

Gravely

	OREGON	OEM No.	Length	Center	Outer	C to C	W / T	Off	Lift	Prod. Code
Gator G5™	**596-816**		16-3/16	5/8			3.00/.203	3/8	1	High-Lift Xtended Fusion® G5
Gator G6™	**396-809**		16-3/16	5/8			3.00/.250	3/8	1	Heavy-Duty High-Lift Xtended Fusion® G6
(3) for 48" cut, 2348, ZT2048, ZT2348, GR1548FX, GR1548FL, HR1548FX, HE1748FL, GR1548FXP, HR1548FLP, HE1748FX, HE1748FXP, HE1748FLP, GR1332FXPCE, (992043) (992078) (992093) (992311) PM148Z, PM144Z, 992101 ZT2148XL, 992143 ZT 2348XL, 992143 ZT 2348XL	**91-183**	04919100	**16-1/4**	5/8			2.50/.250	0	1	
(3) for 48" cut	**91-180**		16-1/4	5/8			2.50/.187	0	1	
(3) for 48" cut	**91-313**		16-1/4	5/8			2.50/.203	0	1	
(3) for 48" cut	**99-127**		16-1/4	5/8			2.50/.203	0	1-1/16	
(3) for 48" cut, mulching	**91-368**		16-1/4	5/8			2.50/.203	0	1	Xtended
Gator® G3™	**96-310**		16-1/4	5/8			2.50/.203	0	3/4	G3
Gator G5™	**596-310**		16-1/4	5/8			3.00/.203	0	1	High-Lift Xtended Fusion® G5
Gator G6™	**396-716**		16-1/4	5/8			3.00/.250	0	1	Heavy-Duty High-Lift Xtended Fusion® G6
(3) for 48" cut	**91-620**		**16-1/2**	5/8			2.50/.203	0	1	Xtended
(3) for 48" cut	**92-145**		16-1/2	5/8			2.50/.203	0	1	
(3) for 48" cut	**92-036**		16-1/2	5/8			2.50/.250	0	1	

GROUP CONTINUES

GROUP CONTINUES

Blades - OEM Replacements

Gravely

GROUP CONTINUES

OREGON	OEM No.	Length	Center	Outer	C to C	W / T	Off	Lift	Prod. Code
91-621		16-1/2	5/8			3.00/.203	0	1-1/2	
(3) for 48" cut, high-lift									
92-207	GDU10230	16-1/2	5/8			2.50/.203	0	13/16	
						Xtended			
(3) for 48" cut, low-lift									
92-737		16-1/2	5/8			2.50/.203	0	1-1/16	
						Xtended			
(3) for 48" cut									
99-126		16-1/2	5/8			2.50/.203	0	1-1/16	
(3) for 48" cut									
92-743		16-1/2	5/8			2.50/.203	0	1	
						Xtended			
(3) for 48" cut, mulching									
96-308		16-1/2	5/8			2.50/.203	0	1	
									G3
Gator® G3™									
596-308		16-1/2	5/8			3.00/.203	0	1	
						High-Lift Xtended Fusion®			G5
Gator G5™									
396-735		16-1/2	5/8			3.00/.250	0	1	
						Heavy-Duty High-Lift Xtended Fusion®			G6
Gator G6™									
91-003	03123700 03123751	**16-9/16**	3/4			2.50/.203	7/16	7/8	
(3) for 48" cut									
91-242	011234 08861600 08899300 11234	**17**	5/8			2.00/.203	5/16	1-1/8	
(2) for 32" & 34" cut, (3) for 50" cut, PM50, PM300, GEM, Mini-ZT1434, Mini-ZT1540, Mini-ZT1534, HVZ1840, ZTXL1634, ZT2350, ZT2250, ZT1840, 1734ZT, 2040ZT, 2250ZT, ZT2350, ZTXL1734, ZT2450, ZTXL1734CARB, 915132 2350ZT, 915403 2040YJ, 915404 2550YJ									
396-805	08866800	17	5/8			3.00/.250	5/16	1	
						Heavy-Duty High-Lift Xtended Fusion®			G6
Gator G6									

B

Gravely

	OREGON	OEM No.	Length	Center	Outer	C to C	W / T	Off	Lift	Prod. Code
Gator® G3™	**96-323**	046998 08779200 08779251 C046998	**17**	5/8			2.50/.203	0	1	G3
Gator G5™	**596-323**		17	5/8			3.00/.203	0	1	High-Lift Xtended Fusion® G5
Gator G6™	**396-723**		17	5/8			3.00/.250	0	1	Heavy-Duty High-Lift Xtended Fusion® G6
(2) for 34" cut, high-lift, Compact Pro, GR1334FX, GR1334FXP, PM34M, PM34Z	**92-158**	09082400 09246700	**17-1/16**	5/8			2.50/.250	5/16	1-1/8	
(2) for 36" cut, (3) for 52" cut	**91-235**	GDU10231	**18**	5/8			2.50/.250	0	7/8	Xtended
(2) for 36" cut, (3) for 52" cut, high-lift	**92-151**	00450300 03253800	18	5/8			2.50/.250	5/16	1-1/8	
Gator G5	**596-817**	00273100 04916400	18	5/8			3.00/.203	5/16	1	High-Lift Xtended Fusion® G5
Gator G6	**396-806**		18	5/8			3.00/.250	5/16	1	Heavy-Duty High-Lift Xtended Fusion® G6
(3) for 54" cut, ZTXL54, ZTXL2554	**92-157**	02961700	**18-7/16**	5/8			2.50/.203	5/16	1-1/8	
Gator G5	**596-818**		18-7/16	5/8			3.00/.203	5/16	1	High-Lift Xtended Fusion® G5
21" cut	**91-005**	0113700 01182400 0137051	**20-9/16**	3/8			2.75/.134	5/16	1	
Gator G3	**96-041**		20-9/16	3/8			2.75/.134	1/4	3/4	G3

B

Blades - OEM Replacements

Gravely

	OREGON	OEM No.	Length	Center	Outer	C to C	W / T	Off	Lift	Prod. Code
(2) for 40" deck, (3) for 60" deck	**91-255** NEW	089046	**20-1/2**	5/8			2.00/.250	0	5/8	
(3) for 60" cut, high-lift	**91-239**	048864 08781800 48864	20-1/2	5/8			2.50/.250	3/4	1-1/16	
(3) for 60" cut	**91-253**	025124 046999 08979600 8979651	**20-1/2**	5/8			2.50/.250	0	1-1/8	
Gator® G3™	**96-319**		20-1/2	5/8			2.50/.203	0	3/4	G3
Gator G5™	**596-319**		20-1/2	5/8			3.00/.203	0	1	High-Lift Xtended Fusion® G5
Gator G6™	**396-740**		20-1/2	5/8			3.00/.250	0	1	Heavy-Duty High-Lift Xtended Fusion® G6
(3) for 60" cut, Pro Turn 160 XDZ, Pro Turn 260 XDZ and Pro Master 260 XDZ	**92-159**	03253900 09081200	**20-1/2**	5/8			2.50/.250	5/16	1-1/8	
Gator G5	**596-815**		20-1/2	5/8			3.00/.203	5/16	1	High-Lift Xtended Fusion® G5
Gator G6	**396-807**		20-1/2	5/8			3.00/.250	5/16	1	Heavy-Duty High-Lift Xtended Fusion® G6
(2) for 40" cut, 1440 RER, GLT440, Sport ZT1440, ZT1740	**191-015**	03624700 03624751	**20-1/2**	3/4			2.50/.187	1/2	15/16	Xtended 100
(2) for 40" cut, high-lift, 1440 RER, GLT440, Sport ZT1440, ZT1740	**91-144**		20-1/2	3/4			3.00/.203	1/2	1-5/16	

GROUP CONTINUES

Gravely

	OREGON	OEM No.	Length	Center	Outer	C to C	W / T	Off	Lift	Prod. Code
			GROUP ↑ CONTINUES							
Gator G3	**96-677**		20-1/2	3/4			3.00/.203	1/2	1	G3
(3) for 61" cut	**91-626**		**21**	5/8			2.50/.203	0	1	
(3) for 61" cut	**91-209**		21	5/8			2.50/.250	0	1	Xtended
(3) for 61" cut	**91-638**		21	5/8			2.50/.203	0	1	
(3) for 61" cut, high-lift	**91-628**		21	5/8			3.00/.203	0	1-1/2	Xtended
(3) for 61" cut, mulching	**91-596**		21	5/8			2.50/.203	0	1	
(3) for 61" cut	**91-308**	GDU10232	21	5/8			2.50/.203	0	1	
(3) for 61" cut	**95-078**		21	5/8			2.50/.250	0	1	
Gator® G3™	**96-347**		21	5/8			2.50/.203	0	3/4	G3
Gator G5™	**596-347**		21	5/8			3.00/.203	0	1	High-Lift Xtended Fusion® G5
Gator G6™	**396-727**		21	5/8			3.00/.250	0	1	Heavy-Duty High-Lift Xtended Fusion® G6
Gator G3	**92-602**	01584500	**21-15/16**	3/4			2.50/.203	1/2	3/4	G3
(3) for 66" cut, Pro Master 260M, 266H, Pro Turn 266, 266H, 466	**92-152**	00360200	**22-1/2**	5/8			2.50/.250	5/16	1-1/8	

B

Blades - OEM Replacements

Gravely

	OREGON	OEM No.	Length	Center	Outer	C to C	W / T	Off	Lift	Prod. Code
(1) for 24" cut, walk-behind	**92-415**	04159600	**23-3/4**	1			2.50/.203	0	1	
Gator® G3™	**96-415**		23-3/4	1			2.50/.187	0	3/4	G3
(3) for 72" cut, high-lift	**91-254**	047685 08983800	**24-1/2**	5/8			2.50/.250	3/4	1-1/16	
(3) for 72" cut	**92-417** NEW	09290600	24-1/2	5/8			2.50/.250	5/16	1-1/4	
(3) for 72" cut	**92-416**	09290500	**24-9/16**	5/8			2.50/.250	5/16	3/4	
Gator G6™	**392-416**	09254700 09290600	24-9/16	5/8			3.00/.250	5/16	1	Heavy-Duty High-Lift Xtended Fusion® G6

Great Dane

(3) for 48" cut, all models	**92-207**	D18086 GDU10230	**16-1/2**	5/8			2.50/.203	0	13/16	Xtended
Gator G3	**96-308**		16-1/2	5/8			2.50/.203	0	1	G3
Gator G5™	**596-308**		16-1/2	5/8			3.00/.203	0	1	High-Lift Xtended Fusion® G5
Gator G6	**396-735**		16-1/2	5/8			3.00/.250	0	1	Heavy-Duty High-Lift Xtended Fusion® G6
(3) for 52" cut, all models	**91-235**	D18037 GDU10231	**18**	5/8			2.50/.250	0	7/8	Xtended
Gator G3	**96-344**		18	5/8			2.50/.203	0	3/4	G3

GROUP CONTINUES

Great Dane

	OREGON	OEM No.	Length	Center	Outer	C to C	W / T	Off	Lift	Prod. Code
Gator G5	596-344		18	5/8			3.00/.203	0	1	High-Lift Xtended Fusion® G5
Gator G6	396-726		18	5/8			3.00/.250	0	1	Heavy-Duty High-Lift Xtended Fusion® G6
(3) for 61" cut, all models	91-308	D18036 GDU10232	21	5/8			2.50/.203	0	1	
(3) for 61" cut, mulching	91-596		21	5/8			2.50/.203	0	1	
Gator® G3™	96-347		21	5/8			2.50/.203	0	3/4	G3
Gator G5™	596-347		21	5/8			3.00/.203	0	1	High-Lift Xtended Fusion® G5
Gator G6™	396-727		21	5/8			3.00/.250	0	1	Heavy-Duty High-Lift Xtended Fusion® G6

Honda

21" cut, walk-behind mower fits HR214, 21KS, 21S, A21, S21, 214, 215, 216, HRA214 & HRA216	91-291	72511-960-000 72511-960-004 72511-VA2-690 72511-VA4-000 M2100-576-91938	20-13/16	13/16	3/8	3-7/16	2.25/.149	0	5/8	
21" cut, walk-behind, high-lift	91-444	72511-960-020	20-13/16	13/16	3/8	3-7/16	2.25/.149	3/16	1-1/16	
Gator G3	90-651		20-13/16	13/16	3/8	3-7/16	2.25/.187	0	3/4	G3
(1) 91-516 & (1) 91-517 for 21" cut Harmony Quada-Cut mower, Harmony II HRS	91-516	72511-VE2-000 72511-VG4-K00	20-7/8	13/16	3/8	3-7/16	2.25/.120	1	11/16	
(1) 91-516 & (1) 91-517 for 21" cut Harmony Quada-Cut mower	91-517	72531-VE2-010 72531-VE2-020	21	1-1/4	7/16	3-7/16	2.75/.120	1/2	0	

B

Blades - OEM Replacements

Honda

	OREGON	OEM No.	Length	Center	Outer	C to C	W / T	Off	Lift	Prod. Code
Upper blade for 21" walk-behind mowers, Micro Cut, Fits Versamow HRX217, use with 91-519	**191-518** NEW	72531-VH7-000	**21**	7/8	7/16	3-1/16	4.75/.120	1	7/8	
Lower blade for 21" walk-behind mowers, Micro Cut, Fits Versamow HRX217, use with 91-518	**191-519** NEW	72511-VH7-000	21	1-1/4	3/8	3-1/2	2.50/.120	1/2	0	
HRC216K2/K3HXA bottom blade	**92-101**	72511-VK6-000	**21-1/4**	3/4	3/8	3-1/2	3.25/.120	1-5/16	1	
HRC216K2 top blade	**92-102**	72531-VK6-010	20-7/8	1-1/4	9/16	3-1/2	2.75/.134	9/16	0	

Huskee

	OREGON	OEM No.	Length	Center	Outer	C to C	W / T	Off	Lift	Prod. Code
21" cut, 911000 series zone start walk-behinds	**91-005**	11285 11370 1137059	**20-9/16**	3/8			2.75/.134	5/16	1	
Gator® G3™	**96-041**		20-9/16	3/8			2.75/.134	1/4	3/4	G3

Husqvarna

	OREGON	OEM No.	Length	Center	Outer	C to C	W / T	Off	Lift	Prod. Code
Gator G3	**96-349**	50668701 506668701 506676501 531005011	**11-15/16**	3/8	5/16	2-3/8	2.50/.203	0	3/4	Xtended G3
(3) for 42" cut, EZ (4216, 4217, 4220, 4624, 4822, 4824, 5224, 5226), RZ(4219, 4222), YT42XLS, YTH22V42LS	**95-084**	539112078	**14-5/8**	5 pt. Star			2.50/.203	0	1	
Gator G3	**95-088**	573953001 577146101	14-5/8	5 pt. Star			2.50/.203	0	3/4	G3
Gator G5™	**595-088**		14-5/8	5 pt. Star			3.00/.164	0	1	High-Lift Xtended Fusion® G5
(3) for 38" cut, model 970-12	**95-058**	539106038 103274 539103274	**14-7/8**	5/8			2.50/.203	0	1	Xtended

B

Husqvarna

	OREGON	OEM No.	Length	Center	Outer	C to C	W / T	Off	Lift	Prod. Code
(2) for 44" cut, models GT160, YT161H	**95-014**	100140M 106635X 122265X 25034 25034R 532025034 532106635 532122265 91712265X	**15-3/8**	3/8			2.25/.187	0	1	
Gator G3	**95-607**		15-3/8	3/8			2.25/.187	0	3/4	G3
(3) for 44" cut	**95-006**	917532130652	**15-3/8**	5 pt. Star			2.25/.149	1/8	15/16	
(3) for 44" cut, heavy-duty	**95-049**		15-3/8	5 pt. Star			2.25/.187	0	1	
(3) for 46" cut, high-lift	**95-052**	144767 157033 159705 170698 176084 532144767 532157033 532157353 532159705 532170698 532176084	**15-1/2**	5 pt. Star			2.25/.149	1/8	1	
		917144767 917157033 917170698 917532144767 917532157353 917532170698 917532176084								
(3) for 46" cut, mulching	**95-045**	130652 145708 152443 163819 532130652 532145708 532152443 917145708CS 917145708MS	15-1/2	5 pt. Star			2.25/.149	1/8	1	
		917152443P 917163819 91730652MS 917532145708 917532152443 918152443								
Gator® G3™	**95-614**		15-1/2	5 pt. Star			2.50/.187	0	3/4	G3
Gator G5™	**595-614**		15-1/2	5 pt. Star			3.00/.164	0	1	High-Lift Xtended Fusion® G5

B

Blades - OEM Replacements

Husqvarna

	OREGON	OEM No.	Length	Center	Outer	C to C	W / T	Off	Lift	Prod. Code
(2) for 32" cut, (3) for 48" cut	**99-127**	100340 101366 539100340 539101366 539106040	**16-1/4**	5/8			2.50/.203	0	1-1/16	
(2) for 32" cut, (3) for 48" cut	**91-180**		16-1/4	5/8			2.50/.187	0	1	
(2) for 32" cut, (3) for 48" cut, Heavy Duty	**91-183**		16-1/4	5/8			2.50/.250	0	1	
(2) for 32" cut, (3) for 48" cut	**91-313**		16-1/4	5/8			2.50/.203	0	1	
(2) for 32" cut, (3) for 48" cut, mulching	**91-368**		16-1/4	5/8			2.50/.203 Xtended	0	1	
Gator® G3™	**96-310**	539106041 539109756	16-1/4	5/8			2.50/.203	0	3/4	G3
Gator G5™	**596-310**		16-1/4	5/8			3.00/.203 High-Lift Xtended Fusion®	0	1	G5
Gator G6™	**396-716**		16-1/4	5/8			3.00/.250 Heavy-Duty High-Lift Xtended Fusion®	0	1	G6
(3) for 48" cut, EZ, EZC, GT, GTH, RZ, YT, YTH	**95-087**	539113425 53911342529	**16-1/4**	5 pt. Star			2.50/.203	0	1	
Gator G5	**595-087**	522037401	16-1/4	5 pt. Star			3.00/.164 High-Lift Xtended Fusion®	0	1	G5
(3) for 48" cut	**195-062**	173920 180054 512258301 532173920 532180054 539107519 575938201 575938301 577146201	**16-11/16** 917173920 917532173920 917532180054 917539107519 917577203106 954633774	5 pt. Star	5/16	3-15/16	2.50/.203 Xtended	0	1-1/4	100

GROUP CONTINUES

Husqvarna

	OREGON	OEM No.	Length	Center	Outer	C to C	W / T	Off	Lift	Prod. Code
			GROUP CONTINUES							
Gator G3	**96-615**		16-11/16	5 pt. Star			2.50/.203	0	1	G3
Gator G5	**596-615**		16-11/16	5 pt. Star			3.00/.187	0	1	High-Lift Xtended Fusion® G5
(3) for 50" cut	**95-018**	137380 532137380 917137380MS 917137380P 917532137380	**17-3/8**	5 pt. Star			2.25/.149	1/8	15/16	
(3) for 50" cut, high-lift	**95-050**		17-3/8	5 pt. Star			2.25/.187	0	1	
Gator G3	**95-609**		17-3/8	5 pt. Star			2.50/.187	0	3/4	G3
Gator® G5™	**595-609**		17-3/8	5 pt. Star			3.00/.164	0	1	High-Lift Xtended Fusion® G5
(3) for 50" cut	**95-027**	121798X 532121798 532138496 917532121798	**17-3/8**	3/8			2.25/.187	0	1	
(3) for 52" cut, GT52XLS, GTH27V52LS, GTH2752TF, GTH24V52LS, GTH26V52LS, GTH3052TDF	**95-077**	574870801	**17-3/4**	5 pt. Star			2.50/.203	0	1	
Gator G5	**595-077**	575240701	17-3/4	5 pt. Star			3.00/.164	0	1	High-Lift Xtended Fusion® G5
(2) for 36" cut, (3) for 52" cut	**91-256**	100341 101485 539100341 539101485 539105712	**18**	5/8			2.50/.203	0	1	Xtended
(2) for 36" cut, (3) for 52" cut, high-lift	**91-623**		18	5/8			3.00/.203	0	1-1/2	Xtended
(2) for 36" cut, (3) for 52" cut, low-lift	**91-235**		18	5/8			2.50/.250	0	7/8	Xtended

GROUP CONTINUES

B

Blades - OEM Replacements

Husqvarna

GROUP CONTINUES

	OREGON	OEM No.	Length	Center	Outer	C to C	W / T	Off	Lift	Prod. Code
(2) for 36" cut, (3) for 52" cut, mulching	**91-218**		18	5/8			2.50/.164	0	1	Xtended
(2) for 36" cut, (3) for 52" cut, mulching	**91-335**		18	5/8			2.50/.203	0	1	Xtended
(2) for 36" cut, (3) for 52" cut	**91-181**		18	5/8			2.50/.187	0	1	Xtended
(2) for 36" cut, (3) for 52" cut	**91-184**		18	5/8			2.50/.250	0	1	Xtended
(2) for 36" cut, (3) for 52" cut	**91-312**		18	5/8			2.50/.203	0	1	Xtended
(2) for 36" cut, (3) for 52" cut	**91-622**		18	5/8			2.50/.203	0	1	Xtended
(2) for 36" cut, (3) for 52" cut	**91-637**		18	5/8			2.50/.203	0	1	
Gator® G3™	**96-344**		18	5/8			2.50/.203	0	3/4	G3
Gator G5™	**596-344**		18	5/8			3.00/.203	0	1	High-Lift Xtended Fusion® G5
Gator G6™	**396-726**		18	5/8			3.00/.250	0	1	Heavy-Duty High-Lift Xtended Fusion® G6
(3) for 52" cut, EZ(4220, 4624, 4824, 5221, 5224, 5225, 5226, 6124), EZC4824, FD52M, MZ5225	**95-085**	510417801 539112079 577240301	**18**	5 pt. Star			2.50/.203	0	1	
Gator G5	**595-085**	521981501	18	5 pt. Star			3.00/.164	0	1	High-Lift Xtended Fusion® G5
(2) for 36" cut, high-lift	**95-034**	120262X 120626X 126338X 143969 532126338 532143969 917126338X	**18-3/16**	3/8	3/8	10	2.50/.187	0	7/8	

B

Husqvarna

	OREGON	OEM No.	Length	Center	Outer	C to C	W / T	Off	Lift	Prod. Code
(2) for 36" cut	**95-036**	127841 138496 532127841 532138496 532138969 917532127841 917532138496	**18-3/16**	5 pt. Star			2.25/.134	1/8	1	
(2) for 36" cut, heavy-duty version of 95-036	**95-026**		18-3/16	5 pt. Star			2.25/.187	1/8	1	
Gator G3	**95-613**		18-3/16	5 pt. Star			2.50/.187	0	3/4	G3
Gator G5	**595-613**		18-3/16	5 pt. Star			3.00/.164	0	1	High-Lift Xtended Fusion® G5
(3) for 54" cut	**195-072**	112053 187254 187256 33954 532187254 532187256 539112053 574292401 575938401	**18-7/16**	5 pt. Star 777187256 917187254 917532187254 917532187256 917539112053 917777187256	5/16	3-15/16	2.75/.187	1/2	1-3/16	Xtended 100
(3) for 54" cut, mulching	**95-082**	187255 24541 532187255 575938501 917532187255	18-7/16	5 pt. Star			2.50/.187	5/16	13/16	
Gator® G3,™ (3) for 54" cut	**95-605**		18-7/16	5 pt. Star			2.50/.187	1/2	3/4	G3
Gator G5™	**595-605**		18-7/16	5 pt. Star			3.00/.164	1/2	1	High-Lift Xtended Fusion® G5
(3) for 54" cut, PZ29CE, PZ29FXBF, PZ34FXBF, PZ54, PZ5426FX, PZ6029FX, PZ6029PFX, PZ6030CV, PZ6034FX, PZ6034FXZT, PZ7234FX	**95-092**	575265901	**19**	5/8			2.50/.250	0	1	
(3) for 54" deck, Fits 54 in. PZ Series Zero Turn Riders	**95-095** NEW	525525901	19	5/8			2.50/.250	0	1-1/4	G3

B

Blades - OEM Replacements

Husqvarna

	OREGON	OEM No.	Length	Center	Outer	C to C	W / T	Off	Lift	Prod. Code
Gator G6™ (3) for 52" cut	**396-800**	544175710	**19-3/16**	7/16	3/8	1-9/16	3.00/.250	0	1	Heavy-Duty High-Lift Xtended Fusion® — G6
(2) for 38" cut, high-lift	**95-031**	121263X 143978 532121263 532143978 917121263X 917121263XMS 917532121263	**19-1/4**	3/8			2.25/.187	0	1	
(2) for 38" cut	**195-033**	12784 127842 131322 138970 513897001 531307221 532127842 532138497 532138970	**19-1/4** 917127842 917138497MS 917138970 917532138497 917532138970	5 pt. Star	3/8	3-1/8	2.25/.134	1/8	1-1/16	Xtended — 100
(2) for 38" cut, heavy-duty version of 195-033	**95-038**		19-1/4	5 pt. Star			2.25/.187	1/8	1-1/16	
(2) for 38" cut, high-lift	**95-047**	532131322 917131322	19-1/4	5 pt. Star			2.25/.187	0	1	
(2) for 38" cut, mulching	**195-003**	134148 134148M 134148X 138497 139774 193957 24692 531307220 532134148 532139774 532193957 539110324	19-1/4 581116301 777193957 917134148MS 917134148X 917139774 917139774MS 917532134148 917532139774 917532193957	5 pt. Star	5/16	3-1/8	2.25/.134	1/8	7/8	Xtended — 100
(2) for 38" cut, heavy-duty version of 195-033	**95-099**		19-1/4	5 pt. Star			2.25/.149	1/8	1	
Gator® G3™	**95-601**		19-1/4	5 pt. Star			2.50/.187	0	3/4	G3
Gator G5™	**595-601**		19-1/4	5 pt. Star			3.00/.164	0	1	High-Lift Xtended Fusion® — G5

Husqvarna

	OREGON	OEM No.	Length	Center	Outer	C to C	W / T	Off	Lift	Prod. Code
20" cut, walk-behind	**95-024**	1935957 532850972 544080204 55139204 69229 701211 7133203 77193957 850972 8509725 917532850972 917532850972MS 91756400 917701211MS 917701211X417 917733203 917850972	**20**	5/8	3/8	1-7/8	2.50/.149	9/16	7/8	
20" cut, mulching, walk-behind	**95-051**	133346 134871 145106 532129277 532133346 532134871 532145106 532700972 532751646 575164601 751646 917129277 917131694 917145106CS 917532129277 917532751646 917700972 917751646	20	5/8	3/8	1-7/8	2.25/.134	7/16	11/16	
20" cut, walk-behind, mulching	**95-044**	204114-884 204340218 340218 531307212 532114884 532752233 752233 917532752233	20	5/8	3/8	1-7/8	2.00/.134	5/16	13/16	
20" cut, walk-behind, mulching	**95-041**		20	5/8	3/8	1-7/8	2.50/.149	7/16	15/16	
Gator® G5™	**595-024**		20	5/8	3/8	1-7/8	3.00/.134	5/8	1	High-Lift Xtended Fusion® — G5
(2) for 42" cut	**195-032**	127843 138498 138791 138971 531307224 532138498 532138971 586230101 917127843 917131323 917138489MS 917532138498	**21**	5 pt. Star			2.25/.149	1/8	1-1/16	Xtended — 100
(2) for 42" cut, heavy-duty version of 195-032	**195-039**		21	5 pt. Star	5/16	3-1/8	2.25/.187	1/8	1-1/18	Xtended — 100
(2) for 42" cut, sand	**195-048**	510417901 532131323	21	5 pt. Star	5/16	3-1/8	2.25/.187	0	3/4	Xtended — 100

GROUP CONTINUES

Blades - OEM Replacements

Husqvarna

GROUP CONTINUES

	OREGON	OEM No.	Length	Center	Outer	C to C	W / T	Off	Lift	Prod. Code
(2) for 42" cut, mulching	**195-005**		21	5 pt. Star			2.25/.134	1/8	7/8	Xtended 100
(2) for 42" cut, mulching, heavy-duty version of 195-005	**195-019**		21	5 pt. Star			2.25/.149	1/8	15/16	Xtended 100
(3) for 61" cut, EZ mowers	**95-086**	539113312 577240401	21	5 pt. Star			2.50/.203	0	1.000	
Gator G3™	**96-900**	521981601	21	5 pt. Star			2.50/.187	0	3/4	G3
Gator G5	**596-900**		21	5 pt. Star			3.00/.164	0	1	High-Lift Xtended Fusion® G5
(2) for 42" cut, Yard Tractor and Zero Turn mowers	**95-623** NEW	586918101 586918102	**21**	5 pt. Star			2.50/.250	0	1-1/4	
Gator G5 (2) for 42" cut	**595-623**	58618102 586918101	21	5 pt. Star			3.00/.164	3/8	1	High-Lift Xtended Fusion® G5
(2) for 42" cut, mulching	**195-005**	134149 24676 422719 531005085 531307223 532134149 532422719 539110460	**21** 777134149 91724676 917532422719 917539110460 917777134149 954636867	5 pt. Star			2.25/.134	1/8	7/8	Xtended 100
(2) for 42" cut, mulching	**195-019**	139775 532139775 917139775P 917532139775	21	5 pt. Star			2.25/.149	1/8	15/16	Xtended 100
Fits 42" decks, reaper blade	**195-093**	5868569	**21**	5 pt. Star	3/8	1-7/8	2.25/.149	7/16	1	
(3) for 60" cut, PZ29CE, PZ29D, PZ29DCE, PZ29FXBF, PZ34FXBF, PZ5426FX, PZ6029D, PZ6029FX, PZ6029PFX, PZ6030CV, PZ6034FX, PZ6034FXZT, PZT6126FS, PZT6128BS, PZ7234FX	**95-078**	539105711	**21**	5/8			2.50/.250	0	1	

GROUP CONTINUES

Husqvarna

	OREGON	OEM No.	Length	Center	Outer	C to C	W / T	Off	Lift	Prod. Code
			GROUP CONTINUES							
(3) for 61" cut, 2348, 30, 4217, 4819, 4821, 5221, 5223, 5225, 5227, 61, 6123, 6125, 6127, 6130, 6134, 7230	**91-308**	539101733 539102093	21	5/8			2.50/.203	0	1	
(3) for 61" cut, mulching, 2348, 30, 4217, 4819, 4821, 5221, 5223, 5225, 5227, 61, 6123, 6125, 6127, 6130, 6134, 7230	**91-596**		21	5/8			2.50/.203	0	1	
Gator® G3™	**96-347**	522936601 539105714	21	5/8			2.50/.203	0	3/4	G3
Gator G5™	**596-347**		21	5/8			3.00/.203	0	1	High-Lift Xtended Fusion® G5
Gator G6™	**396-727**		21	5/8			3.00/.250	0	1	Heavy-Duty High-Lift Xtended Fusion® G6
21" cut, walk-behind	**95-071**	531307235 532159267	**21**	5/8	3/8	1-7/8	2.75/.134	1/2	1-1/8	
21" cut, walk-behind, mulching	**195-067**	531300765 532189028 539111878	21	5/8	3/8	1-7/8	2.25/.134	9/16	1-1/16	Xtended 100
21" cut, walk-behind	**95-057**	532175064 532406712 539112787 581694101 917752234	21	5/8	3/8	1-7/8	2.75/.134	1/2	1-9/16	
Fits 21" Craftsman and Husqvarna walk-behind mowers, 3-in-1 blade	**195-089** NEW	406706	21	5/8	3/8	1-7/8	2.25/.134	9/16	1-5/16	
Gator® G3™	**95-621**	580258101 580258102	21	5/8	3/8	1-7/8	2.50/.187	1/2	3/4	G3
Gator G5™	**595-621**		21	5/8	3/8	1-7/8	3.00/.149	1/2	1	High-Lift Xtended Fusion® G5

B

Blades - OEM Replacements

Husqvarna

	OREGON	OEM No.	Length	Center	Outer	C to C	W / T	Off	Lift	Prod. Code
Gator G5 (1) for 21" cut, walk-behind	**595-622**	180459 532180459 917532180459	**21**	1-1/4	3/8	3-7/16	3.00/.134	1/2	1	High-Lift Xtended Fusion® G5
22" cut, walk-behind	**95-023**	406713 532406713 532850973 701213 7133219 850973 91733219 917532406713 917532850973	**21-3/4**	5/8	3/8	1-7/8	2.50/.149	9/16	7/8	
			91756401 917701213 917701213MS 917850973 917850973MS							
22" cut, walk-behind, mulching	**95-042**		21-3/4	5/8	3/8	1-7/8	2.50/.149	7/16	15/16	
22" cut, walk-behind, mulching	**195-021**	33256 133348 134768 141114 152202 157101 700973 752234 7133269 91733256 91733269 204-3352-56	21-3/4	5/8	3/8	1-7/8	2.25/.134	1/2	15/16	Xtended 100
			204335256 531301252 531307214 531307236 531307237 532134768 532141114 532152202 532355256		532752234 575157101 917157101 917700973 917752234 917532134768 917532141114 917532752234					
	95-073	192682 406707 532192682 532406707 582931401 917192682 917192682X431 917532192682 917532406707	21-3/4	5/8	3/8	1-7/8	2.25/.134	9/16	1-3/16	
Gator® G3™	**95-602**		**21-3/4**	5/8	3/8	1-7/8	2.50/.187	1/2	3/4	G3
Gator G5™	**595-602**		21-3/4	5/8	3/8	1-7/8	3.00/.149	1/2	1	High-Lift Xtended Fusion® G5
22" cut, walk-behind	**95-076**	420463 421825 532420463 532421825 532437601 917532420463 917532421825	**21-15/16**	5 pt. Star			2.25/.134	9/16	13/16	

GROUP CONTINUES

Husqvarna

	OREGON	OEM No.	Length	Center	Outer	C to C	W / T	Off	Lift	Prod. Code
			GROUP CONTINUES							
Gator G3	**95-615**	580244001 585587701	21-15/16	5 pt. Star			2.25/.134	9/16	3/4	G3
(2) for 46" cut, high-lift	**195-070**	405380 532405380 575937901 777405380 917532405380 917777405380	**22-7/8**	5 pt. Star	5/16	3-15/16	2.75/.164	5/16	1-1/8	100 Xtended
(2) for 46" cut, heavy-duty	**95-370**		22-7/8	5 pt. Star			2.50/.203	5/16	1-1/4	Xtended
(2) for 46" cut, mulching	**95-074**	403107 531309715 532403107 917532403107	22-7/8	5 pt. Star			2.25/.149	1/8	15/16	Xtended
Gator G3	**96-370**		22-7/8	5 pt. Star			2.75/.187	1/4	3/4	G3 Xtended
Gator G5	**596-370**		22-7/8	5 pt. Star			3.00/.187	5/16	1	G5 High-Lift Xtended Fusion®
Gator G6 (3) for 61" cut	**396-798**	544175810	**22-3/16**	7/16	3/8	1-9/16	3.00/.250	0	1	G6 Heavy-Duty High-Lift Xtended Fusion®
(3) for 72" cut	**91-609**		**25**	5/8			2.50/.250	0	1	
(3) for 72" cut, mulching, PZ29FXBF, PZ34FXBF, PZ5426FX, PZ6029FX, PZ6029PFX, PZ6030CV, PZ6034FX, PZ6034FXZT, PZ7234FX	**92-169**	539105571 574860902	25	5/8			2.50/.203	0	1	Xtended
Gator® G6™	**396-731**	525341101 525544701 539105476 539110745 574481401	25	5/8			3.00/.250	0	1	G6 Heavy-Duty High-Lift Xtended Fusion®

B

Blades - OEM Replacements

Husqvarna

	OREGON	OEM No.	Length	Center	Outer	C to C	W / T	Off	Lift	Prod. Code
Gator G5, LT2213C, LT2213CA, LZ11577, LZ1577HRB, LZ1577RB, PO12530LT, PXT12530	**595-807**	419273 419273X431 419274 532419273 532419274 777419274	**29-5/8**	5 pt. Star			3.00/.149	5/16	1 High-Lift Xtended Fusion®	G5
			917532419273 91777419274							

Hustler

(1) 92-039 & (1) 92-038 for 36" cut	**92-039**	600900 600900X 600900Y	**13-3/4**	5/8			2.50/.203	0	3/4	
			Discontinued							
(3) for 44" cut, FasTrak, Super Mini Z, Mini Z	**90-205**	784256 784256X	**15-11/16**	5/8			2.50/.203	0	13/16 Xtended	
			Discontinued							
Gator G3™	**96-302**	785728 785728X 787739 794693 794693X 796300 796300X	15-11/16	5/8			2.50/.203	0	1 Xtended	G3
			Discontinued							
(3) for 48" cut, FasTrak, Sport, X-One	**92-207**	601014 601014X 601123 601123X 601123Y 796631 796631X 796631Y	**16-1/2**	5/8			2.50/.203	0	13/16 Xtended	
(3) for 48" cut, high-lift, FasTrak, Sport, X-One	**92-737**	795757 795757X 795757Y	16-1/2	5/8			2.50/.203	0	1-1/16 Xtended	
			Discontinued							
(3) for 48" cut, mulching, FasTrak, Sport, X-One	**92-743**	796623 796623X 796623Y	16-1/2	5/8			2.50/.203	0	1 Xtended	
			Discontinued							
(3) for 48" cut,FasTrak, Sport, X-One	**91-620**		16-1/2	5/8			2.50/.203	0	1 Xtended	
			Discontinued							
(3) for 48" cut, FasTrak, Sport, X-One	**91-621**		16-1/2	5/8			3.00/.203	0	1-1/2	
			Discontinued							
(3) for 48" cut, FasTrak, Sport, X-One	**92-145**		16-1/2	5/8			2.50/.203	0	1	
			Discontinued							

GROUP CONTINUES

Hustler

	OREGON	OEM No.	Length	Center	Outer	C to C	W / T	Off	Lift	Prod. Code
(3) for 48" cut, FasTrak, Sport, X-One	**99-126**		16-1/2	5/8			2.50/.203	0	1-1/16	
			Discontinued							
Gator® G3™	**96-308**	796649Y	16-1/2	5/8			2.50/.203	0	1	G3
			Discontinued							
Gator G5™	**596-308**		16-1/2	5/8			3.00/.203	0	1	G5
			Discontinued				High-Lift Xtended Fusion®			
Gator G6™	**396-735**		16-1/2	5/8			3.00/.250	0	1	G6
			Discontinued				Heavy-Duty High-Lift Xtended Fusion®			
(3) for 52" cut	**91-178**	30866 396-735	**17-7/8**	1/2			2.75/.187	9/16	3/4	
			Discontinued				Xtended			
(3) for 52" cut, high-lift, FasTrak, Mini Z, X-ONE i	**92-044**	787721 787721X 787721Y 795526 795526X 795526Y	**17-7/8**	5/8			2.50/.203	0	1-1/16	
			Discontinued				Xtended			
(3) for 52" cut, Raptor	**92-211**	603995 603995X	17-7/8	5/8			2.25/.187	1/16	15/16	
(3) for 52" cut, mulching, Raptor	**92-212**	794198 794198X 794198Y	17-7/8	5/8			2.50/.203	0	1	
			Discontinued				Xtended			
(3) for 52" cut, low-lift, FasTrak, Mini Z, X-ONE i	**90-206**	783753 783753X 783753Y	17-7/8	5/8			2.50/.203	0	13/16	
			Discontinued							
Gator® G3™	**96-318**	603848 603848X 603848Y 782532 785436 785436X 785436Y	17-7/8	5/8			2.50/.203	0	3/4	G3
			Discontinued							
Gator G5™	**596-704**		17-7/8	5/8			3.00/.203	0	1	G5
			Discontinued				High-Lift Xtended Fusion®			
Gator G6™	**396-704**		17-7/8	5/8			3.00/.250	0	1	G6
			Discontinued				Heavy-Duty High-Lift Xtended Fusion®			

GROUP CONTINUES

Blades - OEM Replacements

Hustler

	OREGON	OEM No.	Length	Center	Outer	C to C	W / T	Off	Lift	Prod. Code
(3) for 52" cut, Super Z	**90-207**	781898	**17-7/8** Discontinued	5/8			3.00/.250	5/8	1	
(3) for 54" cut, standard lift, XR7 decks	**92-208**	601012 601012X 601013 601013X 601124 601124X 601124Y	**18-1/2**	5/8			2.50/.203	0	13/16	
							Xtended			
(3) for 54" cut, high-lift, XR7 decks	**92-042**	797696 797696X 797696Y	18-1/2 Discontinued	5/8			2.50/.203	0	1-1/16	
(3) for 54" cut, mulching, XR7 decks	**92-738**	797704 797704X 797704Y	18-1/2 Discontinued	5/8			2.50/.203	0	1	
							Xtended			
Gator G5	**596-808**	602416 602416X 602416Y 797712 797712X 797712Y	18-1/2 Discontinued	5/8			3.00/.203	0	1	
							High-Lift Xtended Fusion®			G5
Gator G6	**392-208**		18-1/2 Discontinued	5/8			3.00/.250	0	1	
							Heavy-Duty High-Lift Xtended Fusion®			G6
(2) for 42" cut, Zeon	**91-188**		**20-1/2** Discontinued	1/2			2.50/.203	0	1	
							Xtended			
(2) for 42" cut, mulching, Zeon	**91-217**	602698 602698X	20-1/2 Discontinued	1/2			2.50/.203	0	1	
Gator® G3™	**96-801**	602284 602284X 602288	20-1/2 Discontinued	1/2			2.50/.250	0	1	G3
Gator G6™	**396-739**		20-1/2 Discontinued	1/2			3.00/.250	0	1	
							Heavy-Duty High-Lift Xtended Fusion®			G6
(3) for 60" cut, high-lift, Super Z, Z, XR-7 deck	**92-037**	794685 794685X	**20-1/2** Discontinued	5/8			2.50/.203	0	1-1/16	
							Xtended			

GROUP CONTINUES

B

Hustler

	OREGON	OEM No.	Length	Center	Outer	C to C	W / T	Off	Lift	Prod. Code
(3) for 60" cut, low-lift, Super Z, Z, XR-7 deck	**92-038**	600901 793794 793794X 793794Y	20-1/2	5/8			2.50/.203	0	13/16	
							Xtended			
(3) for 60" cut, mulching, Super Z, Z, XR-7 deck	**91-311**	794214 794214X	20-1/2	5/8			2.50/.203	0	1	
			Discontinued				Xtended			
(2) for 42" cut	**92-213**	603992 603992X	20-1/2	5/8			2.25/.187	1/16	15/16	
(3) for 60" cut, Super Z, Z, XR-7 deck	**90-109**		20-1/2	5/8			3.00/.250	0	1-3/16	
			Discontinued				Xtended			
(3) for 60" cut, Super Z, Z, XR-7 deck	**91-253**		20-1/2	5/8			2.50/.250	0	1-1/8	
			Discontinued							
(3) for 60" cut, Super Z, Z, XR-7 deck	**91-264**		20-1/2	5/8			2.50/.203	0	1	
			Discontinued				Xtended			
(3) for 60" cut, Super Z, Z, XR-7 deck	**91-378**		20-1/2	5/8			2.50/.203	0	5/8	
			Discontinued							
(3) for 60" cut, Super Z, Z, XR-7 deck	**91-503**		20-1/2	5/8			2.50/.203	0	1-3/16	
			Discontinued				Xtended			
(3) for 60" cut, Super Z, Z, XR-7 deck	**91-506**		20-1/2	5/8			2.50/.250	0	1-3/16	
			Discontinued				Xtended			
(3) for 60" cut, Super Z, Z, XR-7 deck	**91-509**		20-1/2	5/8			2.50/.250	0	1-1/8	
			Discontinued				Xtended			
(3) for 60" cut, Super Z, Z, XR-7 deck	**94-055**		20-1/2	5/8			2.50/.250	0	1	
			Discontinued							
Gator® G3™	**96-319**	602771 602771X 794230 794230X 794230Y	20-1/2	5/8			2.50/.203	0	3/4	G3
			Discontinued							
Gator G5™	**596-319**		20-1/2	5/8			3.00/.203	0	1	
			Discontinued				High-Lift Xtended Fusion®			G5

GROUP CONTINUES

B

Blades - OEM Replacements

Hustler

	OREGON	OEM No.	Length	Center	Outer	C to C	W / T	Off	Lift	Prod. Code
			GROUP CONTINUES							
Gator G6™	**396-740**		20-1/2	5/8			3.00/.250	0	1	Heavy-Duty High-Lift Xtended Fusion® G6
			Discontinued							
60" cut, Super Z	**90-208**	782516 782516X	**20-15/16**	5/8			3.00/.250	5/8	1	
			Discontinued							
Gator G6	**396-703**		20-15/16	5/8			3.00/.250	5/8	1	Heavy-Duty High-Lift Xtended Fusion® G6
			Discontinued							
(3) for 61" cut, X1, Super Z, Z	**91-308**	602439 602439X 602439Y 795252 795252X 795252Y	**21**	5/8			2.50/.203	0	1	
			Discontinued							
(3) for 61" cut, mulching	**91-596**	793380 793380X 793380Y	21	5/8			2.50/.203	0	1	
			Discontinued							
Gator G3	**96-347**	794859 794859X 794859Y	21	5/8			2.50/.203	0	3/4	G3
			Discontinued							
Gator® G5™	**596-347**		21	5/8			3.00/.203	0	1	High-Lift Xtended Fusion® G5
			Discontinued							
Gator G6™	**396-727**		21	5/8			3.00/.250	0	1	Heavy-Duty High-Lift Xtended Fusion® G6
			Discontinued							
(3) for Z, Super Z, 66, side discharge deck	**92-045**	798496 798496X	**22-1/2**	5/8			3.00/.203	0	1-1/16	Xtended
Gator G5	**596-601**	602414 602415 602864 798504 798512 602414Y 602415Y 602864X	22-1/2	5/8			3.00/.203	0	1	High-Lift Xtended Fusion® G5
			Discontinued							
			798504X 798504Y 798512X 798512Y							
(3) for 72" cut	**92-739**	795260 795260X 795260Y	**23-7/8**	5/8			3.00/.203	0	1-1/16	
			Discontinued							
			GROUP CONTINUES							

B

Hustler

	OREGON	OEM No.	Length	Center	Outer	C to C	W / T	Off	Lift	Prod. Code
Gator G3	**96-216**	793398 793398X 793398Y 794867 794867X 794867Y 796839 796839X 796839Y	23-7/8	5/8			2.50/.203	0	3/4	G3
			Discontinued							
Gator G3 (1) 96-215 & (2) 96-216 for 72" cut, rear discharge	**96-215**	601929 601929X 604164 604164X 796508 796508X	**23-7/8**	5/8			2.50/.203	0	3/4	G3
			Discontinued							
(3) for 72" cut	**91-627**		**24-1/2**	5/8			2.50/.203	0	1	
			Discontinued				Xtended			
(3) for 72" cut, high-lift	**92-035**		24-1/2	5/8			3.00/.250	0	1-3/16	
			Discontinued							
Gator® G3™	**96-341**	602857 602857X 798710 798710X 798728 798728X	24-1/2	5/8			2.50/.203	0	3/4	G3
			Discontinued							
Gator G5™	**596-341**		24-1/2	5/8			3.00/.203	0	1	
			Discontinued				High-Lift Xtended Fusion®			G5
Gator G6™	**396-764**		24-1/2	5/8			3.00/.250	0	1	
			Discontinued				Heavy-Duty High-Lift Xtended Fusion®			G6

Ingersoll

(3) for 48" cut	**91-117**	C31572	**17**	7/8 h 1-1/4 w			2.50/.187	7/16	1	

B

Blades - OEM Replacements

Jacobsen

	OREGON	OEM No.	Length	Center	Outer	C to C	W / T	Off	Lift	Prod. Code
(3) for 42" cut	**91-342**	330721 500904	**14-7/8**	7/16	1/2	1-5/8	2.00/.149	1/4	13/16	
(3) for 48" cut, high-lift, Crew Chief and Crew King	**91-180**	390666	**16-1/4**	5/8			2.50/.187	0	1	
(3) for 48" cut	**91-183**		16-1/4	5/8			2.50/.250	0	1	
(3) for 48" cut	**91-313**		16-1/4	5/8		front	2.50/.203	0	1	
(3) for 48" cut	**99-127**		16-1/4	5/8			2.50/.203	0	1-1/16	
(3) for 48" cut, mulching	**91-368**		16-1/4	5/8			2.50/.203	0	1	Xtended
Gator® G3™	**96-310**		16-1/4	5/8			2.50/.203	0	3/4	G3
Gator G5™	**596-310**		16-1/4	5/8			3.00/.203	0	1	High-Lift Xtended Fusion® G5
Gator G6®	**396-716**		16-1/4	5/8			3.00/.250	0	1	Heavy-Duty High-Lift Xtended Fusion® G6
(2) for 32" cut, (3) for 48" cut	**93-009**	112111-01	**16-1/4**	5/8			2.50/.203	1/2	1-1/8	
Gator G5	**593-600**		16-1/4	5/8			3.00/.203	1/2	1	High-Lift Xtended Fusion® G5

B

Jacobsen

	OREGON	OEM No.	Length	Center	Outer	C to C	W / T	Off	Lift	Prod. Code
(3) for 50" cut	**91-502**	302227-50X	**17**	5/8			2.50/.203	0	1-3/16	
							Xtended			
(3) for 50" cut, high-lift	**91-505**		17	5/8			2.50/.250	0	1-1/8	
							Xtended			
(3) for 50" cut	**91-508**		17	5/8			2.50/.250	0	1-3/16	
							Xtended			
(3) for 50" cut	**91-525**		17	5/8			2.50/.250	5/16	1-3/16	
Gator® G3™	**96-323**		17	5/8			2.50/.203	0	1	G3
Gator G5™	**596-323**		17	5/8			3.00/.203	0	1	
							High-Lift Xtended Fusion®			G5
Gator G6®	**396-723**		17	5/8			3.00/.250	0	1	
							Heavy-Duty High-Lift Xtended Fusion®			G6
(2) for 36" cut, (3) for 52" cut	**91-181**	363055	**18**	5/8			2.50/.187	0	1	
							Xtended			
(2) for 36" cut, (3) for 52" cut, heavy-duty	**91-184**		18	5/8			2.50/.250	0	1	
							Xtended			
(2) for 36" cut, (3) for 52" cut, high-lift	**91-623**		18	5/8			3.00/.203	0	1-1/2	
							Xtended			
(2) for 36" cut, (3) for 52" cut, low-lift	**91-235**		18	5/8			2.50/.250	0	7/8	
							Xtended			
(2) for 36" cut, (3) for 52" cut, mulching	**91-218**		18	5/8			2.50/.164	0	1	
							Xtended			
(2) for 36" cut, (3) for 52" cut, mulching	**91-335**		18	5/8			2.50/.203	0	1	
							Xtended			
(2) for 36" cut, (3) for 52" cut	**91-256**		18	5/8			2.50/.203	0	1	
							Xtended			

GROUP CONTINUES

B

Blades - OEM Replacements

Jacobsen

	OREGON	OEM No.	Length	Center	Outer	C to C	W / T	Off	Lift	Prod. Code
			GROUP CONTINUES							
(2) for 36" cut, (3) for 52" cut	**91-312**		18	5/8			2.50/.203	0	1	Xtended
(2) for 36" cut, (3) for 52" cut	**91-622**		18	5/8			2.50/.203	0	1	Xtended
(2) for 36" cut, (3) for 52" cut	**91-637**		18	5/8			2.50/.203	0	1	
(2) for 36" cut, (3) for 52" cut	**94-053**		18	5/8			2.50/.250	0	1	
Gator® G3™	**96-344**	390665	18	5/8			2.50/.203	0	3/4	G3
Gator G5™	**596-344**		18	5/8			3.00/.203	0	1	High-Lift Xtended Fusion® G5
Gator G6®	**396-726**		18	5/8			3.00/.250	0	1	Heavy-Duty High-Lift Xtended Fusion® G6
(2) for 36" cut, (3) for 52" cut	**93-010**	112111-02	**18**	5/8			2.50/.203	1/2	1-1/8	Xtended
(2) for 36" cut, (3) for 52" cut	**91-039**		18	5/8			2.50/.203	1/2	1	
Gator G3	**93-601**		18	5/8			2.50/.203	1/2	3/4	G3
Gator G5	**593-601**		18	5/8			3.00/.203	1/2	1	High-Lift Xtended Fusion® G5
(3) for 60" cut	**94-072**		**20-1/2**	1/2			2.50/.250	0	3/4	
(3) for 60" cut	**91-188**		20-1/2	1/2			2.50/.203	0	1	Xtended
			GROUP CONTINUES							

Jacobsen

	OREGON	OEM No.	Length	Center	Outer	C to C	W / T	Off	Lift	Prod. Code
			GROUP CONTINUES							
(3) for 60" cut, mulching	**91-217**		20-1/2	1/2			2.50/.203	0	1	
Gator® G3™	**96-801**	79050	20-1/2	1/2			2.50/.250	0	1	G3
Gator G6®	**396-739**		20-1/2	1/2			3.00/.250	0	1	Heavy-Duty High-Lift Xtended Fusion® G6
(3) for 60" cut	**91-503**	30227-60X	**20-1/2**	5/8			2.50/.203	0	1-3/16	Xtended
(3) for 60" cut, high-lift	**91-506**	30227-60X	20-1/2	5/8			2.50/.250	0	1-3/16	Xtended
(3) for 60" cut, low-lift	**91-378**	30227-60X	20-1/2	5/8			2.50/.203	0	5/8	
(3) for 60" cut, mulching	**91-311**	30227-60X	20-1/2	5/8			2.50/.203	0	1	Xtended
(3) for 60" cut	**91-509**	30227-60X	20-1/2	5/8			2.50/.250	0	1-1/8	Xtended
(3) for 60" cut	**91-527**	30227-60X	20-1/2	5/8			2.50/.250	5/16	1-3/16	
(3) for 60" cut	**90-109**	30227-60X	20-1/2	5/8			3.00/.250	0	1-3/16	Xtended
(3) for 60" cut	**91-253**	30227-60X	20-1/2	5/8			2.50/.250	0	1-1/8	
(3) for 60" cut	**91-264**	30227-60X	20-1/2	5/8			2.50/.203	0	1	Xtended
(3) for 60" cut	**92-037**	30227-60X	20-1/2	5/8			2.50/.203	0	1-1/16	Xtended
(3) for 60" cut	**92-038**	30227-60X	20-1/2	5/8			2.50/.203	0	13/16	Xtended
			GROUP CONTINUES							

B

Blades - OEM Replacements

Jacobsen

	OREGON	OEM No.	Length	Center	Outer	C to C	W / T	Off	Lift	Prod. Code
			GROUP CONTINUES							
(3) for 60" cut	**94-055**	30227-60X	20-1/2	5/8			2.50/.250	0	1	
Gator® G3™	**96-319**	30227-60X	20-1/2	5/8			2.50/.203	0	3/4	G3
Gator G5™	**596-319**	30227-60X	20-1/2	5/8			3.00/.203	0	1	High-Lift Xtended Fusion® G5
Gator G6®	**396-740**	30227-60X	20-1/2	5/8			3.00/.250	0	1	Heavy-Duty High-Lift Xtended Fusion® G6
(3) for 60" cut, Turf Cat, (11) for HR 9016 Turbo	**92-013**	3007759	**20-13/16**	1/2			2.50/.250	0	1	
Gator G6	**392-013**	2810030 4119024	20-13/16	1/2			3.00/.250	0	1	Heavy-Duty High-Lift Xtended Fusion® G6
(3) for 60" cut, 940000-970000 series, Frontline 951, HR6010, LHAM002, LMAB(703,797), LMAC(151-157), Ransomes, RD deck, Turfcat 628D, ZT220D	**93-013**	112243-03	**21**	5/8			2.50/.250	1/2	5/8	Xtended
(3) for 60" cut, high-lift, 2260ES, JZT2230, JZT2250, Procut Z, ZT231	**93-011**	112111-03	21	5/8			2.50/.250	1/2	1-1/8	Xtended
(3) for 61" cut, high-lift	**91-135**		21	5/8			2.50/.203	1/2	1	
Gator® G3™	**96-702**		21	5/8			2.50/.203	1/2	1	G3
Gator G5™	**596-702**		21	5/8			3.00/.203	1/2	1	High-Lift Xtended Fusion® G5
Gator G6®	**396-702**		21	5/8			3.00/.250	1/2	1	Heavy-Duty High-Lift Xtended Fusion® G6

B

Jacobsen

	OREGON	OEM No.	Length	Center	Outer	C to C	W / T	Off	Lift	Prod. Code
(3) for 63" cut, high-lift, Turfcat	**94-076**	4176600	**22**	1/2			2.50/.250	1/2	1	
(3) for 63" cut, Turfcat	**94-075**		22	1/2			2.50/.250	1/2	15/16	
(3) for 63" cut, Turfcat	**94-077**		22	1/2			2.50/.187	7/16	1	
Gator G6	**394-075**		22	1/2			3.00/.250	1/2	1	Heavy-Duty High-Lift Xtended Fusion® G6
(5) for 90" cut, (7) for 124" cut, high-lift, AR-5, AR-522, AR-722T	**91-591**	4137186	**22-5/16**	1/2			2.50/.250	1/8	1-1/8	
(5) for 90" cut, (7) for 124" cut, low-lift, AR-5, AR-522, AR-722T	**92-014**	4124087	22-5/16	1/2			2.50/.250	1/2	5/8	
Gator G6	**391-591**	4163105 4163106	22-5/16	1/2			3.00/.250	1/2	1	Heavy-Duty High-Lift Xtended Fusion® G6
(3) 91-364 & (4) 91-363 per deck, RH cut, fits HR511 model	**91-364**	JT391040	**23**	1/2	7/16	2-7/8	2.50/.250	0	11/16	
Gator G3	**96-795**	4186582	23	1/2	3/8	2-7/8	2.50/.250	0	1	G3
(4) 91-363 & (3) 91-364 per deck, LH cut, fits HR511	**91-363**	JT391039	**23**	1/2	7/16	2-7/8	2.50/.250	0	11/16	
Gator® G3™	**96-696**		23	1/2	3/8	2-7/8	2.50/.250	0	1	G3

B

Blades - OEM Replacements

	OREGON	OEM No.	Length	Center	Outer	C to C	W / T	Off	Lift	Prod. Code
Jacobsen										
(3) for 72" cut	**91-627**		**24-1/2**	5/8			2.50/.203	0	1	Xtended
(3) for 72" cut, high-lift	**92-035**		24-1/2	5/8			3.00/.250	0	1-3/16	
Gator G3	**96-341**	3970261	24-1/2	5/8			2.50/.203	0	3/4	G3
Gator G5™	**596-341**		24-1/2	5/8			3.00/.203	0	1	High-Lift Xtended Fusion® G5
Gator G6®	**396-764**		24-1/2	5/8			3.00/.250	0	1	Heavy-Duty High-Lift Xtended Fusion® G6
(3) for 72" cut, Turfcat	**91-352**	390515	**24-15/16**	7/16	7/16	2-7/8	2.50/.250	0	13/16	
(3) for 72" cut	**93-025**	112111-04	**24-15/16**	5/8			2.50/.250	1/2	1-1/4	
John Deere										
(3) for 44" cut	**91-589**	M121589	**15-13/16**	3/4			2.50/.164	5/8	3/4	
Gator G5	**591-594**	AM30698 M119798 M119799 M41237	15-13/16	13/16			3.00/.164	5/8	1	High-Lift Xtended Fusion® G5
(3) for 46" cut, Model 46-47-48 deck	**91-389**	AM31100 M41967	**16**	11/16			2.00/.203	0	13/16	
(3) for 46" cut, lawn tractor, Used on Scotts mower	**91-448**	M127466	16	11/16			2.50/.203	0	15/16	
Gator® G3™	**96-394**		16	11/16			2.50/.203	0	1	G3
Gator G6®	**396-725**		16	11/16			3.00/.250	0	1	Heavy-Duty High-Lift Xtended Fusion® G6

B

John Deere

	OREGON	OEM No.	Length	Center	Outer	C to C	W / T	Off	Lift	Prod. Code
(3) for 48" cut	**91-620**		**16-1/2**	5/8			2.50/.203	0	1	
							Xtended			
(3) for 48" cut, high-lift	**91-621**		16-1/2	5/8			3.00/.203	0	1-1/2	
(3) for 48" cut, low-lift	**92-207**		16-1/2	5/8			2.50/.203	0	13/16	
							Xtended			
(3) for 48" cut, mulching	**92-743**		16-1/2	5/8			2.50/.203	0	1	
							Xtended			
(3) for 48" cut	**92-145**		16-1/2	5/8			2.50/.203	0	1	
(3) for 48" cut	**92-737**		16-1/2	5/8			2.50/.203	0	1-1/16	
							Xtended			
(3) for 48" cut	**99-126**		16-1/2	5/8			2.50/.203	0	1-1/16	
Gator G3 (3) for 48" cut, commercial walk-behind V style deck	**96-308**	AM104489 M73509 PT11136	16-1/2	5/8			2.50/.203	0	1	G3
Gator G5™	**596-308**		16-1/2	5/8			3.00/.203	0	1	
							High-Lift Xtended Fusion®			G5
Gator G6	**396-735**		16-1/2	5/8			3.00/.250	0	1	
							Heavy-Duty High-Lift Xtended Fusion®			G6
(3) for 48" cut, Yard Tractor, high-lift for bagging	**91-447**	M135589 M76466	**16-9/16**	13/16			2.50/.203	7/16	1-1/16	
Gator® G3™	**96-618**		16-9/16	13/16			2.50/.203	7/16	1	G3
(3) for 48" cut, new style	**91-381**	M114581 M115328 M115495	**16-5/8**	13/16			2.50/.203	3/8	1-3/16	
(3) for 48" cut	**91-401**		16-5/8	13/16			2.50/.203	5/16	13/16	

GROUP CONTINUES

Blades - OEM Replacements

John Deere

	OREGON	OEM No.	Length	Center	Outer	C to C	W / T	Off	Lift	Prod. Code
			GROUP CONTINUES							
	91-383	M113517	16-5/8	13/16			2.50/.203	1/4	3/4	
(3) for 48" cut, Tri-cycler										
	96-332	M111522	16-5/8	13/16			2.50/.203	3/8	1	G3
Gator G3 Do not use with mulching kit installed.										
	596-332		16-5/8	13/16			3.00/.203	3/8	1	G5
Gator G5™ — Hi-Lift Do not use with mulching kit installed.										High-Lift Xtended Fusion®
	396-732		16-5/8	13/16			3.00/.250	3/8	1	G6
Gator G6® Do not use with mulching kit installed.										Heavy-Duty High-Lift Xtended Fusion®
	90-348	M127500 M145476	**16-15/16**	13/16			2.50/.203	9/16	1-1/8	
(3) for 48" cut, 48C convertible deck X324, Z445										
	96-354	M127673	16-15/16	13/16			2.50/.203	9/16	3/4	G3
Gator G3										
	596-354		16-15/16	13/16			3.00/.203	5/8	1	G5
Gator® G5™										High-Lift Xtended Fusion®
	396-354		16-15/16	13/16			3.00/.250	1/2	1	G6
Gator G6®										Heavy-Duty High-Lift Xtended Fusion®
	191-108	GX20250 GY20568	**17**	11/16	3/8	3-11/16	2.51/.164	1/4	1	100
(3) for 48" cut, L120, L130, Sabre 1642HS, 1742HS, 1948GV, 1948HV, 2148HV										Xtended
	91-496	GX20434	17	11/16	3/8	3-11/16	2.50/.164	1/4	1-3/8	
(3) for 48" cut, high-lift										
	92-675	GX20819	17	11/16	3/8	3-11/16	2.50/.187	3/8	1-3/16	G3
Gator G3™										

B

John Deere

	OREGON	OEM No.	Length	Center	Outer	C to C	W / T	Off	Lift	Prod. Code
(3) for 48" cut, 100 Series, D140/ D160, X140, X165, Z245	**92-104**	GX21784 GY20852	**17**	7 pt. Star			2.75/.164	3/16	1-3/16	
(3) for 48" cut, high-lift, 100 Series, D140/D160, X140, X165, Z245	**91-586**	GX21785	17	7 pt. Star			2.50/.187	3/16	1-3/8	
(3) for 48" cut, mulching, 100 Series, D140/D160, X140, X165, Z245	**92-105**	GX21786	17	7 pt. Star			2.75/.164	1/4	1-1/4	
Gator G3	**92-616**	AM137757 AM137758 AM141035 AM141036	17	7 pt. Star			2.50/.187	1/4	3/4	G3
Gator G5	**592-616**		17	7 pt. Star			3.00/.164	5/16	1	G5 High-Lift Xtended Fusion®
(3) for 48" cut, 7-Iron deck	**91-079**	M136194	**17-1/16**	7/8			2.50/.250	7/16	1-1/16	
(3) for 48" cut, high-lift, 7-Iron deck	**92-144**		17-1/16	7/8			3.00/.250	7/16	1-5/16	
Gator G6	**396-770**	M136185 TCU14939 TCU18678 TCU21475 TCU30315	17-1/16	7/8			3.00/.250	1/2	1	G6 Heavy-Duty High-Lift Xtended Fusion®
(3) for 50" cut, 285 model series	**91-393**	AM39966 M86209	**17-3/16**	11/16			2.50/.203	0	13/16	
Gator® G6®	**396-738**	AM106634 M76461	17-3/16	11/16			3.00/.250	0	1	G6 Heavy-Duty High-Lift Xtended Fusion®
(2) for 36" cut, (3) for 52" cut 636M and 652M QuikTrak	**91-622**	TCU37208	**18**	5/8			2.50/.203	0	1	Xtended
(2) for 36" cut, (3) for 52" cut, High Lift 636M and 652M QuikTrak	**91-623**		18	5/8			3.00/.203	0	1-1/2	Xtended

GROUP CONTINUES

B

Blades - OEM Replacements

John Deere

	OREGON	OEM No.	Length	Center	Outer	C to C	W / T	Off	Lift	Prod. Code
			GROUP CONTINUES							
(2) for 36" cut, (3) for 52" cut, low-lift 636M and 652M QuikTrak	**91-235**		18	5/8			2.50/.250	0	7/8	
							Xtended			
(2) for 36" cut, (3) for 52" cut, mulching 636M and 652M QuikTrak	**91-218**		18	5/8			2.50/.164	0	1	
							Xtended			
(2) for 36" cut, (3) for 52" cut, mulching 636M and 652M QuikTrak	**91-335**	PT8721 TCU35393	18	5/8			2.50/.203	0	1	
							Xtended			
(2) for 36" cut, (3) for 52" cut, heavy-duty 636M and 652M QuikTrak	**91-184**		18	5/8			2.50/.250	0	1	
							Xtended			
(2) for 36" cut, (3) for 52" cut 636M and 652M QuikTrak	**91-256**	AM104490	18	5/8			2.50/.203	0	1	
							Xtended			
(2) for 36" cut, (3) for 52" cut 636M and 652M QuikTrak	**91-181**		18	5/8			2.50/.187	0	1	
							Xtended			
(2) for 36" cut, (3) for 52" cut 636M and 652M QuikTrak	**91-312**		18	5/8			2.50/.203	0	1	
							Xtended			
(2) for 36" cut, (3) for 52" cut 636M and 652M QuikTrak	**91-637**		18	5/8			2.50/.203	0	1	
(2) for 36" cut, (3) for 52" cut 636M and 652M QuikTrak	**94-053**		18	5/8			2.50/.250	0	1	
Gator® G3™	**96-344**		18	5/8			2.50/.203	0	3/4	G3
Gator G5™	**596-344**		18	5/8			3.00/.203	0	1	
							High-Lift Xtended Fusion®			G5
Gator G6®	**396-726**		18	5/8			3.00/.250	0	1	
							Heavy-Duty High-Lift Xtended Fusion®			G6

B

John Deere

	OREGON	OEM No.	Length	Center	Outer	C to C	W / T	Off	Lift	Prod. Code
(3) for 52" cut, Quicktrac 652R, 652B	**91-039**	TCU34280	**18**	5/8			2.50/.203	1/2	1	
(3) for 52" cut, Quicktrac, high-lift, 652R, 652B	**93-010**		18	5/8			2.50/.203	1/2	1-1/8	Xtended
Gator G3	**93-601**		18	5/8			2.50/.203	1/2	3/4	G3
Gator G5	**593-601**		18	5/8			3.00/.203	1/2	1	High-Lift Xtended Fusion® G5
Gator G6	**393-601**		18	5/8			3.00/.250	1/2	1	Heavy-Duty High-Lift Xtended Fusion® G6
(3) for 54" cut, 100 series and D170	**92-103**	GX21380 GY20679 GY20684 GY20686	**18-5/8**	7 pt. Star			2.75/.187	1/4	1-1/8	
Gator G3	**92-617**		18-5/8	7 pt. Star			2.50/.187	3/8	3/4	G3
Gator G5	**592-617**		18-5/8	7 pt. Star			3.00/.164	3/8	1	High-Lift Xtended Fusion® G5
(3) for 54" cut, new style	**91-380**	GY20569 M114582 M115329 M115496	**18-11/16**	13/16			2.50/.203	3/8	1-1/8	
(3) for 54" cut, performance blade	**91-404**	M135590 M76467	18-11/16	13/16			2.50/.203	5/16	7/8	
(3) for 54" cut, Tricycler	**91-384**	M113518	18-11/16	13/16			2.50/.203	3/8	3/4	
Gator® G3™	**96-306**	M111523	18-11/16	13/16			2.50/.203	3/8	1	G3
Gator G5™	**596-306**		18-11/16	13/16			3.00/.203	3/8	1	High-Lift Xtended Fusion® G5
Gator G6®	**396-706**		18-11/16	13/16			3.00/.250	3/8	1	Heavy-Duty High-Lift Xtended Fusion® G6

B

Blades - OEM Replacements

John Deere

	OREGON	OEM No.	Length	Center	Outer	C to C	W / T	Off	Lift	Prod. Code
(3) for 54" cut, 2210, 4010, 4110, 4115, 4210, 4310, 4410, 4510, 4610, 4710, GT225, GT235, GT235E, GT245, GX255, GX325, GX335, GT345, GX355, LX255, LX266, LX277, LX279, LX280, LX288, X series, Z425, Z445	**90-354**	M143520	**18-15/16**	13/16			2.75/.250	1/2	1-3/8	
Gator G5	**596-719**	M145516 M152726	18-15/16	13/16			3.00/.203	1/2	1	High-Lift Xtended Fusion® G5
Gator G6	**396-719**		18-15/16	13/16			3.00/.250	1/2	1	Heavy-Duty High-Lift Xtended Fusion® G6
(3) for 54" cut, 7-Iron deck, Z Track, Signature Series	**91-138**	M134305 M136195 TCU30316	**19**	7/8			2.50/.250	7/16	1-1/16	
(3) for 54", high-lift, Z Track, Signature Series	**92-118**	M144652 M164016 TCU30317	19	7/8			3.00/.250	7/16	1-5/16	
Gator G3	**96-364**	M135334	19	7/8			2.50/.203	7/16	3/4	G3
Gator® G5™	**596-769**		19	7/8			3.00/.203	7/16	1	High-Lift Xtended Fusion® G5
Gator G6®	**396-769**		19	7/8			3.00/.250	7/16	1	Heavy-Duty High-Lift Xtended Fusion® G6
(2) for 38" cut	**91-400**	AM100945 M84472	**19-1/2**	11/16			3.00/.203	7/16	1-1/2	
(2) for 38" cut, high-lift	**91-398**		19-1/2	11/16			3.00/.203	7/16	1-3/4	
(2) for 38" cut, low-lift	**191-392**	AM100946 M82408	19-1/2	11/16	3/8	4	2.53/.203	7/16	5/8	Xtended 100
(2) for 38" cut, mulcher	**91-403**	M112991	19-1/2	11/16			2.50/.203	3/8	1-3/16	
Gator G3™	**96-309**	AM104652 M112974 M118958 M74449	19-1/2	11/16			2.50/.203	7/16	3/4	G3

GROUP CONTINUES

John Deere

	OREGON	OEM No.	Length	Center	Outer	C to C	W / T	Off	Lift	Prod. Code
			GROUP CONTINUES							
Gator G5	596-309		19-1/2	11/16			3.00/.203	7/16	1	High-Lift Xtended Fusion® G5
Gator G6	396-709		19-1/2	11/16			3.00/.250	7/16	1	Heavy-Duty High-Lift Xtended Fusion® G6
(2) for 38" cut, standard deck	92-109	AM100991 AM137324 AM137326 AM141041 M153118 M154159 M83459	19-7/16	7 pt. Star			3.00/.203	7/16	1-3/4	
Gator G6	396-352		19-7/16	7 pt. Star			3.00/.250	7/16	1	Heavy-Duty High-Lift Xtended Fusion® G6
(3) for 60" cut, 1476, 160, 260, 261, 318, 400, 420, 430	91-391	AM35557 M112847 M48452	20-7/16	3/4			2.00/.203	0	1	Xtended
(3) 60" cut, 160, 2210, 261, 318, 400, 4010, 4100, 4110, 4115, 420, 4200, 4210, 430, 4300, 4310, 4400, 4410, 4500, 4510, 4600, 4610, 4700, 4710, 655, 755, 802, 855, 955	91-394	AM100538 M141785 M87622	20-1/2	7/8			2.50/.312	0	1	
Gator® G5™ Supplied with washer. Washer must be used on all models.	596-734	M113878	20-1/2	7/8			3.00/.203	0	1	High-Lift Xtended Fusion® G5
Gator G6®	396-734		20-1/2	7/8			3.00/.250	0	1	Heavy-Duty High-Lift Xtended Fusion® G6
21" cut, JS20, JS25, JS30, JS40, JS45, MowMentum	99-119	GX22250	20-11/16	3/8			2.50/.149	3/8	1-1/8	
21" cut walk-behind JS60, JS61, JS 63 and 8800 Fairway Mower, Gator G3™	96-811	GC00032 GC00175 GC00344 GX22190	20-3/4	3/8	7/16	1-15/16	2.75/.134	3/8	3/4	G3
21" cut, Tri-cycler walk-behind mower, 145Z	91-443	M111453 M112738 M112972 M125413 M77178	20-7/8	7/8	3/8	3-11/16	2.75/.134	3/8	1	

B

Blades - OEM Replacements

John Deere

	OREGON	OEM No.	Length	Center	Outer	C to C	W / T	Off	Lift	Prod. Code
	91-078	M128485	**20-7/8**	7/8			2.50/.312	7/16	7/8	

(3) for 60" cut, 7 Iron decks, 1400, 1500, 2520, 495, 4100, 4200, 4400, 4500, 4600, 4700, 595, 600L, M665, Z-Trac (520, 667, 757, 797,720, 820, 830, 840, 850, 860, 915)

	92-113	M144196 TCU15881	20-7/8	7/8			3.00/.250	1/2	1-1/4	

(3) for 60" cut, high-lift, 7 Iron decks, 1400, 1500, 2520, 495, 4100, 4200, 4400, 4500, 4600, 4700, 595, 600L, M665, Z-Trac (520, 667, 757, 797,720, 820, 830, 840, 850, 860, 915)

	91-587	M131958 M168223	20-7/8	7/8			2.50/.250	3/8	1	

(3) for 60" cut, mulching, 7 Iron decks, 1400, 1500, 2520, 495, 4100, 4200, 4400, 4500, 4600, 4700, 595, 600L, M665, Z-Trac (520, 667, 757, 797,720, 820, 830, 840, 850, 860, 915)

	596-730	M133381 M163983 TCU18990	20-7/8	7/8			3.00/.203	1/2	1	
							High-Lift Xtended Fusion®			G5

Gator® G5™
Supplied with washer. Washer must be used on all models

	396-730		20-7/8	7/8			3.00/.250	1/2	1	
							Heavy-Duty High-Lift Xtended Fusion®			G6

Gator G6®

	91-080 NEW	M163983	**20-15/16**	15/16			2.75/.203	9/16	1-7/16	

(3) for 60" deck, fits models John Deere 737, 757, 777, 797, 997, and 7 Iron

	92-011	PT14764 PT7132	20-15/16	5/8	1/2	2-9/16	3.00/.120	11/16	7/8	

21" cut, walk-behind mower made by Lawn Boy tri-cut design.

	91-584	SWP1001513KT	**20-15/16**	1	1/2	5	2.50/.250	7/16	1	

(3) for 60" cut, grooming mower

	91-135	TCU34281	**21**	5/8			2.50/.203	1/2	1	

(3) for 61" cut, 661R QuikTrak

	93-011		21	5/8			2.50/.250	1/2	1-1/8	
							Xtended			

(3) for 61" cut, High Lift, 661R QuikTrak

	93-013		21	5/8			2.50/.250	1/2	5/8	
							Xtended			

(3) for 61" cut, low-lift, 661R QuikTrak

GROUP CONTINUES

John Deere

	OREGON	OEM No.	Length	Center	Outer	C to C	W / T	Off	Lift	Prod. Code
(3) for 61" cut, mulching, 661R QuikTrak	**91-596**	TCU35394	21	5/8			2.50/.203	0	1	
Gator G3™	**96-702**		21	5/8			2.50/.203	1/2	1	G3
Gator G5	**596-702**		21	5/8			3.00/.203	1/2	1	High-Lift Xtended Fusion® G5
Gator G6	**396-702**		21	5/8			3.00/.250	1/2	1	Heavy-Duty High-Lift Xtended Fusion® G6
(2) for a 42" cut, 100 series tractor	**191-139**	GX20249 GX20433 GY20567	**21-3/8**	11/16	3/8	3-11/16	2.52/.164	7/16	1	Xtended 100
Gator G3	**92-676**		21-3/8	11/16	3/8	3-11/16	2.50/.187	3/8	1	G3
(2) for 42" cut, 102, 105, 107S, 115, 125, 135, D100, D105, D110, D120, D125, D130, LA100, LA105, LA110, LA115, LA120, LA125, LA135, LT160, LT180, SST15, SST16, X110, X120, X125, X145, X225, X300, X304, Z225, Z235	**92-110**	AM137327 AM137329 AM141032 AM141034 M154061 M154062	**21-3/8**	7 pt. Star			2.75/.203	3/8	1-5/16	
(2) for 42" cut, mulching, 102, 105, 107S, 115, 125, 135, D100, D105, D110, D120, D125, D130, LA100, LA105, LA110, LA115, LA120, LA125, LA135, LT160, LT180, SST15, SST16, X110, X120, X125, X145, X225, X300, X304, Z225, Z235	**192-106**	AM137328 AM137330 AM137333 AM141031 AM141033 GX22151 GY20850 M149422	21-3/8	7 pt. Star			2.75/.164	7/16	7/8	Xtended 100
Gator® G3™, left-hand blade / CCW rotation (2) for 42" cut, 102/115/125/135	**92-615**		21-3/8	7 pt. Star			2.50/.203	1/4	3/4	G3
Gator G5™	**592-615**		21-3/8	7 pt. Star			3.00/.203	3/8	1	High-Lift Xtended Fusion® G5
(2) for 42" cut, model GT225, LX225, LX279, GT225, GT235	**91-446**	M139976 M148613	**21-7/16**	13/16			2.50/.203	13/16	1-1/4	

GROUP CONTINUES

Blades - OEM Replacements

John Deere

	OREGON	OEM No.	Length	Center	Outer	C to C	W / T	Off	Lift	Prod. Code
			GROUP CONTINUES							
(2) for 42" cut, model GT225, LX225, LX279, GT225, GT235	**92-119**		**21-7/16**	13/16			2.75/.187	7/8	1-1/4	
Gator G3	**91-604**	M139975 M139977 M159046 M159047	21-7/16	13/16			2.50/.203	13/16	3/4	G3
(2) for 42" cut, yard tractor, mulcher models made by John Deere	**91-449**	M127129 M139802	**21-7/16**	11/16			2.50/.164	7/16	1-1/16	
Gator G3	**96-340**	M124896 M139803 M145969 M156416	21-7/16	11/16			2.50/.203	7/16	1	G3
(3) for 62" cut, 2305, 2000/3000/4000 series compact utility tractors, X(465, 475, 485, 495, 575, 585, 595, 700, 720, 724, 728, 740, 744, 748)	**90-309**	M143504	**21-5/8**	13/16			2.50/.250	1/2	1-1/4	
(3) for 62" cut, High Lift,2305, 2000/3000/4000 series compact utility tractors, X(465, 475, 485, 495, 575, 585, 595, 700, 720, 724, 728, 740, 744, 748)	**91-590**	M152727	21-5/8	13/16			3.00/.250	7/16	1-5/16	
Gator® G5™	**596-771**		21-5/8	13/16			3.00/.203	1/2	1	High-Lift Xtended Fusion® G5
Gator G6®	**396-771**		21-5/8	13/16			3.00/.250	1/2	1	Heavy-Duty High-Lift Xtended Fusion® G6
(3) for 62" cut, high-lift	**92-120**	TCU51118	**21-7/8**	7/8			2.50/.312	3/8	7/8	
Gator G5	**596-722**	M144297 M144935	21-7/8	7/8			3.00/.203	3/8	1	High-Lift Xtended Fusion® G5
Gator G6	**396-710**		21-7/8	7/8			3.00/.250	3/8	1	Heavy-Duty High-Lift Xtended Fusion® G6

B

John Deere

	OREGON	OEM No.	Length	Center	Outer	C to C	W / T	Off	Lift	Prod. Code
(3) for 72" cut	**91-395**	AM102401 AM38314 M141786 M80783	**24-15/16**	7/8			2.50/.312	0	1	
Gator G5 Supplied with washer. Washer must be used on all models.	**596-775**		24-15/16	7/8			3.00/.203	0	1	High-Lift Xtended Fusion® G5
Gator G6	**396-775**		24-15/16	7/8			3.00/.250	0	1	Heavy-Duty High-Lift Xtended Fusion® G6
(2) for 48" cut, (3) for 72" cut, grooming mower	**91-585**	5WP1008199K2 5WP1008199KT	**24-15/16**	1	1/2	5	2.50/.250	3/8	1	
Gator® G5™	**591-585**	5WP1001511K2 5WP100511KT	24-15/16	1	1/2	5	3.00/.203	3/8	1	High-Lift Xtended Fusion® G5
(3) for 72" cut, high-lift, 7-Iron Deck	**92-114**	TCU15882	**25**	7/8			3.00/.250	1/2	1-1/4	
(3) for 72" cut, mulching, 7-Iron Deck	**91-588**	M142514	25	7/8			2.50/.250	3/8	1	
Gator G5	**596-743**		25	7/8			3.00/.203	7/16	1	High-Lift Xtended Fusion® G5
Gator G6®	**396-743**	EPC201693 M141669	25	7/8			3.00/.250	1/2	1	Heavy-Duty High-Lift Xtended Fusion® G6
(1) for 27" cut, 7400, Gator G6	**391-595**	TCU27401 TCU27876	**27**	13/16			3.00/.250	0	1	Heavy-Duty High-Lift Xtended Fusion® G6
30" cut, formed center for washer, standard-lift	**91-399**	AM101538 AM36407 M89454	**29-9/16**	11/16			2.50/.203	7/16	1-3/8	

B

Blades - OEM Replacements

Kees

	OREGON	OEM No.	Length	Center	Outer	C to C	W / T	Off	Lift	Prod. Code
(3) for 42" cut, ZEK42200	**95-084**	539112078	**14-5/8**	5 pt. Star			2.50/.203	0	1	
Gator G3™	**95-088**		14-5/8	5 pt. Star			2.50/.203	0	3/4	G3
Gator G5	**595-088**		14-5/8	5 pt. Star			3.00/.164	0	1	High-Lift Xtended Fusion® G5
(3) for 48" cut, W48 series, W32 series, high-lift	**93-005**		**16-1/4**	5/8	1/4	1-5/8	2.50/.250	0	1-3/16	
(3) for 48" cut	**91-180**	483011	16-1/4	5/8			2.50/.187	0	1	
(3) for 48" cut	**91-313**		16-1/4	5/8			2.50/.203	0	1	
(2) for 32"cut, (3) for 48" cut, newer style models, HKW4814, HVG48161, MKW48121, MKW48141, MKH48141, ZMB48181, ZMKW48191	**99-127**	100340 101366	16-1/4	5/8			2.50/.203	0	1-1/16	
(3) for 48" cut, mulching	**91-368**		16-1/4	5/8			2.50/.203	0	1	Xtended
(3) for 48" cut, heavy-duty	**91-183**		16-1/4	5/8			2.50/.250	0	1	
Gator® G3™	**96-310**		16-1/4	5/8			2.50/.203	0	3/4	G3
Gator G5™	**596-310**		16-1/4	5/8			3.00/.203	0	1	High-Lift Xtended Fusion® G5
Gator G6®	**396-716**		16-1/4	5/8			3.00/.250	0	1	Heavy-Duty High-Lift Xtended Fusion® G6

B

Kees

	OREGON	OEM No.	Length	Center	Outer	C to C	W / T	Off	Lift	Prod. Code
(3) for 48" cut, ZEKH48240	**95-087**	539113425	**16-1/4**	5 pt. Star			2.50/.203	0	1	
Gator G5	**595-087**		16-1/4	5 pt. Star			3.00/.164	0	1	High-Lift Xtended Fusion® G5
(2) for 36" cut, (3) for 52" cut, use on series 0,1 medium duty	**91-181**	363055	**18**	5/8			2.50/.187	0	1	Xtended
(2) for 36" cut, (3) for 52" cut, heavy-duty HKW52141, HVG52161, HKH52181, MKW36121, MKW36141, ZMKH52231, ZKH5221, ZKH52251, ZMKW52231, ZWKH52253	**91-256**	100341 101485	18	5/8			2.50/.203	0	1	Xtended
(2) for 36" cut, (3) for 52" cut, heavy-duty, W36 series	**91-184**		18	5/8			2.50/.250	0	1	Xtended
(2) for 36" cut, (3) for 52" cut	**91-312**		18	5/8			2.50/.203	0	1	Xtended
(2) for 36" cut, (3) for 52" cut, mulching	**91-218**		18	5/8			2.50/.164	0	1	Xtended
(2) for 36" cut, (3) for 52" cut, mulching	**91-335**		18	5/8			2.50/.203	0	1	Xtended
Gator® G3™	**96-344**		18	5/8			2.50/.203	0	3/4	G3
Gator G5™	**596-344**		18	5/8			3.00/.203	0	1	High-Lift Xtended Fusion® G5
Gator G6®	**396-726**		18	5/8			3.00/.250	0	1	Heavy-Duty High-Lift Xtended Fusion® G6
(3) for 61" cut, ZKH61121, ZKH61251, ZMKW61231, ZVH061242, ZVKH61272, ZVKW61252, ZWKH61303, ZWKH61243, ZWKH61273	**91-308**	101733	**21**	5/8			2.50/.203	0	1	
(3) for 61" cut	**91-209**		21	5/8			2.50/.250	0	1	Xtended

GROUP CONTINUES

B

Blades - OEM Replacements

Kees

	OREGON	OEM No.	Length	Center	Outer	C to C	W / T	Off	Lift	Prod. Code
			GROUP CONTINUES							
(3) for 61" cut	**91-626**		21	5/8			2.50/.203	0	1	
(3) for 61" cut	**91-638**		21	5/8			2.50/.203	0	1	
(3) for 61" cut	**95-078**		21	5/8			2.50/.250	0	1	
(3) for 61" cut, high-lift	**91-628**		21	5/8			3.00/.203	0	1-1/2	
							Xtended			
(3) for 61" cut, mulching	**91-596**		21	5/8			2.50/.203	0	1	
Gator® G3™	**96-347**		21	5/8			2.50/.203	0	3/4	G3
Gator G5™	**596-347**		21	5/8			3.00/.203	0	1	
							High-Lift Xtended Fusion®			G5
Gator G6®	**396-727**		21	5/8			3.00/.250	0	1	
							Heavy-Duty High-Lift Xtended Fusion®			G6
(2) for 42" cut, sand	**195-048**		**21**	5 pt. Star	5/16	3-1/8	2.25/.187	0	3/4	
							Xtended			100
(3) for 61" cut, ZELKH6125	**95-086**	539113312	21	5 pt. Star			2.50/.203	0	1.000	
Gator G3	**96-900**		21	5 pt. Star			2.50/.187	0	3/4	G3
Gator G5	**596-900**		21	5 pt. Star			3.00/.164	0	1	
							High-Lift Xtended Fusion®			G5

B

	OREGON	OEM No.	Length	Center	Outer	C to C	W / T	Off	Lift	Prod. Code
Kees										
(3) for 72" cut	**91-609**		**25**	5/8			2.50/.250	0	1	
(3) for 72" cut, mulching	**92-169**		25	5/8			2.50/.203	0	1	Xtended
Gator G6	**396-731**	539105476 72303	25	5/8			3.00/.250	0	1	Heavy-Duty High-Lift Xtended Fusion® G6
King Kutter										
(3) for 60" cut, left-hand cut, RFM-60	**91-452**	190320 502320	**20-1/16**	1/2			2.00/.250	1/2	7/8	
(3) for 72" cut, left-hand cut, RFM-72, RSFM-72	**91-453**	190324 190424 502324	**24-1/16**	1/2			2.00/.250	1/2	7/8	
Kubota										
(3) for 44" cut, model RC44G	**91-430**	70000-2503 70712-34330	**15-3/8**	11/16	3/8	1-1/2	2.00/.187	0	1	
(3) for 48" cut, ZG2048	**92-047**	K5575-34330 K5575-97530	**16-9/16**	11/16			2.50/.250	1/2	1-1/8	
Gator® G3™	**96-047**	K5579-92330 K5579-92332	16-9/16	11/16			2.50/.203	1/2	3/4	G3
Gator G6®	**392-047**		16-9/16	11/16			3.00/.250	1/2	1	Heavy-Duty High-Lift Xtended Fusion® G6
Gator G6 (3) for 48" cut, BX, RCK48-18BX	**391-617**	K5181-71940	**16-5/8**	11/16			3.00/.250	5/16	1	Heavy-Duty High-Lift Xtended Fusion® G6
(3) for 48" cut, RCK48P-222Z	**92-124**	K5184-97532 K5576-34350 K5576-97530	**16-5/8**	7/8			2.50/.250	9/16	1-1/8	
Gator G5™	**592-124**	K5576-34340 K5915-34360 K5915-97530	16-5/8	7/8			3.00/.203	5/8	1	High-Lift Xtended Fusion® G5

B

Blades - OEM Replacements

Kubota

	OREGON	OEM No.	Length	Center	Outer	C to C	W / T	Off	Lift	Prod. Code
	91-613	K5583-34340 K5583-97530	**16-5/8**	1-1/8			2.50/.250	9/16	1-1/8	
(3) for 48" cut, Z700 series, RCK48P-723Z										
	391-613	K5583-34350	16-5/8	1-1/8			3.00/.250	1/2	1	
Gator G6							Heavy-Duty High-Lift Xtended Fusion®			G6
	91-433	70000-25005 76500-34330	**16-11/16**	11/16			2.00/.203	0	1-1/16	
(3) for 48" cut, model RC48G										
	91-435	70000-34330 76505-34330	**16-11/16**	11/16			2.00/.250	3/8	1-1/16	
(3) for 48" cut, deck RC48-62H, RC48-62A/F, & RC48G, center mount mower										
	91-436	70000-00605 70000-25004 76529-34330 K5615-34330 K5615-34340	**18-5/8**	1-1/8			2.50/.250	1/2	1-1/16	
(3) for 54" cut, RCK54-18Z, RCK54P-321Z, ZD18, ZD321										
	92-132	K5615-97520 K5764-34330 K5764-34340 K5764-34342	18-5/8	1-1/8			2.50/.250	5/8	13/16	
(3) for 54" cut, low-lift, RCK54-18Z, RCK54P-321Z, ZD18, ZD321										
	396-796	K5613-34340 K5613-97530 K5615-34342	18-5/8	1-1/8			3.00/.250	1/2	1	
Gator® G6®							Heavy-Duty High-Lift Xtended Fusion®			G6
	92-127	K5619-34350 K5619-97530	**18-5/8**	7/8			2.50/.250	9/16	1-1/8	
(3) for 54" cut, RCK54P-227Z, RCK54P-321Z, ZD221, ZG227										
	596-812	K5221-71920 K5351-34340 K5351-34342 K5351-99020 K5351-99040 K5935-34360 K5935-97530	18-5/8	7/8			3.00/.203	5/8	1	
Gator G5™							High-Lift Xtended Fusion®			G5
	396-812		18-5/8	7/8			3.00/.250	5/8	1	
Gator G6							Heavy-Duty High-Lift Xtended Fusion®			G6
	92-048	K5617-34330 K5617-97530	**18-5/8**	11/16			2.50/.250	1/2	1-1/8	
(3) for 54" cut, ZG2354, GR2120										

GROUP CONTINUES

B

Kubota

	OREGON	OEM No.	Length	Center	Outer	C to C	W / T	Off	Lift	Prod. Code
Gator® G3™	**96-748**	K5231-92340 K5617-97590 K5639-92300 K5639-92332	18-5/8	11/16			2.50/.203	1/2	3/4	Xtended G3
Gator G6®	**396-748**		18-5/8	11/16			3.00/.250	1/2	1	Heavy-Duty High-Lift Xtended Fusion® G6
(2) for 40" cut, RCK40LT, RCK40LTB, RCK40-16T, T1460	**92-121**	K5111-71940 K5111-97520	**20-3/8**	11/16			2.50/.250	5/8	1-1/8	
(2) for 40" cut, RCK40LT, RCK40LTB, RCK40-16T, T1460	**92-122**	K5112-71940	20-3/8	11/16			2.50/.250	9/16	1-1/8	
High lift for RCK60-27B, RCK60-24B, RC60B-21	**92-130**	K5645-97520 K5651-34330 K5651-34340	**20-1/2**	1-1/8			2.50/.250	5/8	13/16	
(3) for 60" cut, RCK60-21Z, RCK60-24B, B3030, B7510, B7610, B7800, F2560E, F3060, ZD18, ZD21	**92-128**	K5645-34330 K5645-34340 K5645-97530	20-1/2	1-1/8			2.50/.250	5/8	1-1/8	
Gator G3	**96-363**		20-1/2	1-1/8			2.50/.203	9/16	3/4	G3
Gator G5™	**596-810**		20-1/2	1-1/8			3.00/.203	5/8	1	High-Lift Xtended Fusion® G5
Gator G6	**396-810**		20-1/2	1-1/8			3.00/.250	5/8	1	Heavy-Duty High-Lift Xtended Fusion® G6
(3) for 60" cut, for Z Series riders	**92-115**	K5371-34330	**20-1/2**	7/8			2.50/.250	5/8	3/4	
Gator® G3™	**96-612**		20-1/2	7/8			2.50/.203	5/8	3/4	G3
Gator G6®	**396-612**		20-1/2	7/8			3.00/.250	5/8	1	Heavy-Duty High-Lift Xtended Fusion® G6
(3) for 60" cut, RCK60B-23BX, BX2660, BX24, BX7510	**92-123**	K5371-99040	**20-9/16**	7/8			2.50/.250	7/16	13/16	

B

Blades - OEM Replacements

Kubota

	OREGON	OEM No.	Length	Center	Outer	C to C	W / T	Off	Lift	Prod. Code
(3) for 60" cut, ZD(21, 25F, 28, 323, 326P, 331P, 331LP), ZG327	**92-049**	K5647-34340 K5647-97530 K5668-97530	**20-9/16**	1-1/8			2.50/.250	9/16	1-1/8	
(3) for 60" cut, B1550, B1750, F2560E, F3060, G1900, G2000	**91-438**	70000-00602 70000-25001 76539-34330	20-9/16	1-1/8			2.50/.250	1/2	1-1/8	
Gator G3	**96-787**	K5945-34360	20-9/16	1-1/8			2.50/.203	1/2	3/4	G3
Gator G5™	**596-787**		20-9/16	1-1/8			3.00/.203	1/2	1	High-Lift Xtended Fusion® G5
Gator G6	**396-787**		20-9/16	1-1/8			3.00/.250	1/2	1	Heavy-Duty High-Lift Xtended Fusion® G6
Gator G6 (3) for 60" cut, RCK60P-12000Z	**396-816**	K5955-34360 K5955-97530	**20-9/16**	1-5/16			3.00/.250	5/8	1	Heavy-Duty High-Lift Xtended Fusion® G6
21" cut, high-lift, self-propelled, 5HP walk-behind	**91-417**	65621-37210	**20-11/16**	3/4	9/16	3-9/16	2.25/.149	1/2	11/16	
(2) for 42" Zero Turn mowers, Z122R	**92-184** NEW	K5559-34330	**21-9/16**	11/16			2.50/.250	9/16	1-1/8	
Gator G6 (2) for 42" cut, RCK42P122Z	**391-612**	K5559-34330	21-9/16	11/16			3.00/.250	5/8	1	Heavy-Duty High-Lift Xtended Fusion® G6
(3) for 72" cut, Pro Deck	**92-116**	K5677-34340 K5677-97530	**24-1/2**	1-1/8			2.50/.250	5/8	1-3/16	
(3) for 72" cut, RC72 Deck used on B2150D, F2560, F3060	**91-493**	70000-25002 70000-25013 76553-34330 K5676-97520 K5698-34340 K5698-97530	24-1/2	1-1/8			2.50/.250	9/16	7/8	
Gator® G3™	**96-372**	70000-25030 70090-30708	24-1/2	1-1/8			2.50/.203	9/16	3/4	G3

GROUP CONTINUES

	OREGON	OEM No.	Length	Center	Outer	C to C	W / T	Off	Lift	Prod. Code
Kubota										
			GROUP CONTINUES							
Gator G5™	**596-717**		24-1/2	1-1/8			3.00/.203	5/8	1	G5 High-Lift Xtended Fusion®
Gator G6®	**396-814**		24-1/2	1-1/8			3.00/.250	5/8	1	G6 Heavy-Duty High-Lift Xtended Fusion®
Land Pride										
(3) for 44" cut	**90-205**	839-267C	**15-11/16**	5/8			2.50/.203	0	13/16	Xtended
Gator G3	**96-302**	839-270C	15-11/16	5/8			2.50/.203	0	1	G3 Xtended
(3) for 48" cut	**92-207**	839-157C	**16-1/2**	5/8			2.50/.203	0	13/16	Xtended
(3) for 48" cut, high-lift	**92-737**		16-1/2	5/8			2.50/.203	0	1-1/16	Xtended
(3) for 48" cut, mulching	**92-743**		16-1/2	5/8			2.50/.203	0	1	Xtended
(3) for 48" cut	**91-620**		16-1/2	5/8			2.50/.203	0	1	Xtended
(3) for 48" cut	**91-621**		16-1/2	5/8			3.00/.203	0	1-1/2	
(3) for 48" cut	**92-145**		16-1/2	5/8			2.50/.203	0	1	
(3) for 48" cut	**99-126**		16-1/2	5/8			2.50/.203	0	1-1/16	
Gator® G3™	**96-308**	839-270C	16-1/2	5/8			2.50/.203	0	1	G3
Gator G5™	**596-308**		16-1/2	5/8			3.00/.203	0	1	G5 High-Lift Xtended Fusion®
Gator G6®	**396-735**		16-1/2	5/8			3.00/.250	0	1	G6 Heavy-Duty High-Lift Xtended Fusion®

B

Blades - OEM Replacements

Land Pride

	OREGON	OEM No.	Length	Center	Outer	C to C	W / T	Off	Lift	Prod. Code
			GROUP CONTINUES							
AFM4011, 40133, 4211	**92-175**	890-326C	**16-7/8**	1			2.50/.250	3/4	13/16	
AFM4011, AMF4211, AMF40133, FDR1548, FDR1648, FDR2548	**91-087**	890-325C	**16-7/8**	1			2.50/.203	13/16	13/16	
(3) for 52" cut, Razor Z52, ZR52, ZRP52	**92-174**	890-874C	**17-13/16**	5/8			2.50/.203	0	7/8	
60" cut	**90-208**	839-179C	**20-15/16**	5/8			3.00/.250	5/8	1	
Gator G6	**396-703**	839-181C	20-15/16	5/8			3.00/.250	5/8	1	Heavy-Duty High-Lift Xtended Fusion® G6
(3) for 60" cut, AMF 4014, AT 2560, AT 2660, FD 2560, FDR 1560, FDR 1660, FDR 2560	**92-172**	890-375C	**20-15/16**	1			2.50/.250	3/4	15/16	
(3) for 60" cut, high-lift, AMF 4014, AT 2560, AT 2660, FD 2560, FDR 1560, FDR 1660, FDR 2560	**91-457**	890-171C 890-951C	20-15/16	1			2.50/.203	3/4	1-3/16	
(3) for 60" cut, low-lift, AMF 4014, AT 2560, AT 2660, FD 2560, FDR 1560, FDR 1660, FDR 2560	**92-173**	890-204C	20-15/16	1			2.50/.312	11/16	11/16	
Gator G5™	**596-627**	890-702C 891-428C	20-15/16	1			3.00/.203	3/4	1	High-Lift Xtended Fusion® G5
(3) for 72" cut, AFM 4016, AFM 40200, AFM 4016, AT2572, AT 2584, AT 2660, AT 2672, FD 2548, FD 2560, FD 2572, FDR 1572, FDR 1648, FDR 1660, FDR 2548, FDR 2572	**92-170**	890-318C	**25**	1	1/2	6-1/2	2.50/.250	11/16	13/16	
(3) for 72" cut, high-lift, AFM 4016, AFM 40200, AFM 4016, AT2572, AT 2584, AT 2660, AT 2672, FD 2548, FD 2560, FD 2572, FDR 1572, FDR 1648, FDR 1660, FDR 2548, FDR 2572	**91-456**	890-172C	25	1	1/2	6-1/2	2.50/.250	3/4	1-1/8	

GROUP CONTINUES

Land Pride

	OREGON	OEM No.	Length	Center	Outer	C to C	W / T	Off	Lift	Prod. Code
	92-171	890-200C	25	1	1/2	6-1/2	2.50/.312	11/16	11/16	

GROUP CONTINUES

(3) for 72" cut, low-lift, AFM 4016, AFM 40200, AFM 4016, AT2572, AT 2584, AT 2660, AT 2672, FD 2548, FD 2560, FD 2572, FDR 1572, FDR 1648, FDR 1660, FDR 2548, FDR 2572

	396-728	890-698C	25	1	1/2	6-1/2	3.00/.250	3/4	1	

Heavy-Duty High-Lift Xtended Fusion® G6

Gator G6®

Lastec

	91-622		**18**	5/8			2.50/.203	0	1	

Xtended

(3) for 52" cut, 2552, 2652, 2886

	91-637		18	5/8			2.50/.203	0	1	

(3) for 52" cut, (2) for 36" cut

	91-623	027048	18	5/8			3.00/.203	0	1-1/2	

Xtended

(3) for 52" cut, (2) for 36" cut, high-lift

	91-235		18	5/8			2.50/.250	0	7/8	

Xtended

(3) for 52" cut, low-lift

	91-218		18	5/8			2.50/.164	0	1	

Xtended

(3) for 52" cut, mulching

	91-181		18	5/8			2.50/.187	0	1	

Xtended

(3) for 52" cut

	91-184		18	5/8			2.50/.250	0	1	

Xtended

(3) for 52" cut

	91-256		18	5/8			2.50/.203	0	1	

Xtended

(3) for 52" cut

	91-312		18	5/8			2.50/.203	0	1	

Xtended

(3) for 52" cut

	91-335		18	5/8			2.50/.203	0	1	

Xtended

(3) for 52" cut

	94-053		18	5/8			2.50/.250	0	1	

(3) for 52" cut

GROUP CONTINUES

B

Blades - OEM Replacements

Lastec

GROUP CONTINUES

OREGON	OEM No.	Length	Center	Outer	C to C	W / T	Off	Lift	Prod. Code
96-344		18	5/8			2.50/.203	0	3/4	G3
Gator® G3™									
596-344		18	5/8			3.00/.203	0	1	G5
Gator G5™						High-Lift Xtended Fusion®			
396-726		18	5/8			3.00/.250	0	1	G6
Gator G6®						Heavy-Duty High-Lift Xtended Fusion®			
91-308	P246	**21**	5/8			2.50/.203	0	1	
(3) for 61" cut, low-lift, 2261, 2661, 2861, 2961, & EF 100 Series									
91-628	P128	21	5/8			3.00/.203	0	1-1/2	
(3) for 61" cut						Xtended			
91-626		21	5/8			2.50/.203	0	1	
(3) for 61" cut									
91-209		21	5/8			2.50/.250	0	1	
(3) for 61" cut						Xtended			
95-078		21	5/8			2.50/.250	0	1	
(3) for 61" cut									
91-596		21	5/8			2.50/.203	0	1	
(3) for 61" cut, mulching									
96-347	063265 P322	21	5/8			2.50/.203	0	3/4	G3
Gator® G3™									
596-347		21	5/8			3.00/.203	0	1	G5
Gator G5™						High-Lift Xtended Fusion®			
396-727		21	5/8			3.00/.250	0	1	G6
Gator G6®						Heavy-Duty High-Lift Xtended Fusion®			
91-609		**25**	5/8			2.50/.250	0	1	
(3) for 72" cut									
396-731	P107 P701 P848 P849	25	5/8			3.00/.250	0	1	G6
Gator G6						Heavy-Duty High-Lift Xtended Fusion®			

B

Lawn-Boy

	OREGON	OEM No.	Length	Center	Outer	C to C	W / T	Off	Lift	Prod. Code
Gator G3 (1) for 20" cut, walk-behind	**96-809**	112-8841-03	**19-3/4**	7/16	3/8	2-1/2	2.25/.134	7/16	3/4	Xtended G3
(1) for 21" cut, Insight walk mowers	**94-051**		**20-13/16**	7/16	3/8	2-1/2	2.25/.149	7/16	7/8	
Gator G3 — Insight walk mowers	**96-660**	108-0954-03	20-13/16	7/16	3/8	2-1/2	2.25/.134	7/16	1	G3
(1) for 21" cut, fits most 21" models	**92-011**	611240 612543 612543-01 612543-03 682915 683682 684380 89844	**20-15/16**	5/8	1/2	2-9/16	3.00/.120	11/16	7/8	

Lesco

(3) for 48" cut	**93-005**	13418	**16-1/4**	5/8	1/4	1-5/8	2.50/.250	0	1-3/16	
(3) for 48" cut	**91-313**		16-1/4	5/8			2.50/.203	0	1	
(3) for 48" cut	**91-180**		16-1/4	5/8			2.50/.187	0	1	
(3) for 48" cut	**99-127**		16-1/4	5/8			2.50/.203	0	1-1/16	
(3) for 48" cut mulching	**91-368**		16-1/4	5/8			2.50/.203	0	1	Xtended
Gator® G3™	**96-310**		16-1/4	5/8			2.50/.203	0	3/4	G3
Gator G5™	**596-310**		16-1/4	5/8			3.00/.203	0	1	High-Lift Xtended Fusion® G5
Gator G6®	**396-716**		16-1/4	5/8			3.00/.250	0	1	Heavy-Duty High-Lift Xtended Fusion® G6

B

Blades - OEM Replacements

Lesco

	OREGON	OEM No.	Length	Center	Outer	C to C	W / T	Off	Lift	Prod. Code
(3) for 48" cut	**93-009**	50227	**16-1/4**	5/8			2.50/.203	1/2	1-1/8	
Gator G5	**593-600**		16-1/4	5/8			3.00/.203	1/2	1	High-Lift Xtended Fusion® G5
(3) for 48" cut	**91-620**	21871 5011	**16-1/2**	5/8			2.50/.203	0	1	Xtended
(3) for 48" cut, high-lift	**91-621**	50111	16-1/2	5/8			3.00/.203	0	1-1/2	
Gator G3	**96-308**		16-1/2	5/8			2.50/.203	0	1	G3
Gator G5	**596-308**		16-1/2	5/8			3.00/.203	0	1	High-Lift Xtended Fusion® G5
Gator® G6®	**396-735**		16-1/2	5/8			3.00/.250	0	1	Heavy-Duty High-Lift Xtended Fusion® G6
(2) for 36" cut, (3) for 52" cut	**94-022**	50575	**18**	1/2			2.50/.187	3/16	1	
(2) for 36" cut, (3) for 52" cut, low-lift	**94-018**		18	1/2			2.50/.187	3/16	11/16	
Gator G3™	**94-618**		18	1/2			2.50/.203	3/16	3/4	G3
(2) for 36" cut, (3) for 54" cut	**91-622**	50125	**18**	5/8			2.50/.203	0	1	Xtended
(2) for 36" cut, (3) for 54" cut, high-lift	**91-623**	50140	18	5/8			3.00/.203	0	1-1/2	Xtended
(2) for 36" cut, (3) for 54" cut, low-lift	**91-235**		18	5/8			2.50/.250	0	7/8	Xtended
(2) for 36" cut, (3) for 54" cut	**91-181**		18	5/8			2.50/.187	0	1	Xtended

GROUP CONTINUES

Lesco

	OREGON	OEM No.	Length	Center	Outer	C to C	W / T	Off	Lift	Prod. Code
			GROUP CONTINUES							
(2) for 36" cut, (3) for 54" cut	91-184		18	5/8			2.50/.250	0	1	
							Xtended			
(2) for 36" cut, (3) for 54" cut	91-256		18	5/8			2.50/.203	0	1	
							Xtended			
(2) for 36" cut, (3) for 54" cut	91-312		18	5/8			2.50/.203	0	1	
							Xtended			
(2) for 36" cut, (3) for 54" cut	91-637		18	5/8			2.50/.203	0	1	
(2) for 36" cut, (3) for 54" cut	94-053		18	5/8			2.50/.250	0	1	
(2) for 36" cut, (3) for 54" cut, mulching	91-335		18	5/8			2.50/.203	0	1	
							Xtended			
(2) for 36" cut, (3) for 54" cut, mulching	91-218		18	5/8			2.50/.164	0	1	
							Xtended			
Gator® G3™	96-344		18	5/8			2.50/.203	0	3/4	G3
Gator G5™	596-344		18	5/8			3.00/.203	0	1	
							High-Lift Xtended Fusion®			G5
Gator G6®	396-726		18	5/8			3.00/.250	0	1	
							Heavy-Duty High-Lift Xtended Fusion®			G6
(2) for 36" cut, (3) for 52" cut	93-010	50241	18	5/8			2.50/.203	1/2	1-1/8	
							Xtended			
(2) for 36" cut, (3) for 52" cut	91-039		18	5/8			2.50/.203	1/2	1	
Gator G5	593-601		18	5/8			3.00/.203	1/2	1	
							High-Lift Xtended Fusion®			G5
Gator G6	393-601		18	5/8			3.00/.250	1/2	1	
							Heavy-Duty High-Lift Xtended Fusion®			G6

B

Blades - OEM Replacements

Lesco

	OREGON	OEM No.	Length	Center	Outer	C to C	W / T	Off	Lift	Prod. Code
	91-626	50170 5070	**21**	5/8			2.50/.203	0	1	
(3) for 61" cut										
	91-628	60116	21	5/8			3.00/.203	0	1-1/2	
							Xtended			
(3) for 61" cut, high-lift										
	91-596		21	5/8			2.50/.203	0	1	
(3) for 61" cut, mulching										
	91-209		21	5/8			2.50/.250	0	1	
							Xtended			
(3) for 61" cut										
	91-638		21	5/8			2.50/.203	0	1	
(3) for 61" cut										
	91-308		21	5/8			2.50/.203	0	1	
(3) for 61" cut										
	95-078		21	5/8			2.50/.250	0	1	
(3) for 61" cut										
	96-347		21	5/8			2.50/.203	0	3/4	G3
Gator® G3™										
	596-347		21	5/8			3.00/.203	0	1	
							High-Lift Xtended Fusion®			G5
Gator G5™										
	396-727		21	5/8			3.00/.250	0	1	
							Heavy-Duty High-Lift Xtended Fusion®			G6
Gator G6®										

Massey Ferguson

	99-132	1737228AYP 1737228BZYP	**16-1/8**	3/4			2.50/.203	0	1-1/16	
(3) for 46" cut, 130, 2000, 2523										
	599-132		16-1/8	3/4			3.00/.203	0	1	
							High-Lift Xtended Fusion®			G5
Gator G5										
	91-723	1704856ASM	**16-1/8**	3/4	3/8	2-9/16	2.00/.203	0	1-1/8	
(1) 91-723 & (1) 91-701 for 38" cut, 2521, 25195										

GROUP CONTINUES

Massey Ferguson

	OREGON	OEM No.	Length	Center	Outer	C to C	W / T	Off	Lift	Prod. Code
GROUP CONTINUES										
(3) for 44" cut, small frame garden tractor (1989 & newer)	**91-705**	1704100	16-1/8	3/4	3/8	2-9/16	2.00/.203	0	1-1/16	
Gator G3	**90-685**		16-1/8	3/4	3/8	2-9/16	2.50/.203	0	3/4	G3
Gator G5	**590-685**		16-1/8	3/4	3/8	2-9/16	3.00/.187	0	1	High-Lift Xtended Fusion® G5
(3) for 48" cut, 2900	**91-313**	5101986SYP	**16-1/4**	5/8			2.50/.203	0	1	
(3) for 48" cut, 2900	**91-183**		16-1/4	5/8			2.50/.250	0	1	
(3) for 48" cut, 2900	**91-180**		16-1/4	5/8			2.50/.187	0	1	
(3) for 48" cut, 2900	**99-127**		16-1/4	5/8			2.50/.203	0	1-1/16	
(3) for 48" cut, mulching, 2900	**91-368**		16-1/4	5/8			2.50/.203	0	1	Xtended
Gator® G3™	**96-310**		16-1/4	5/8			2.50/.203	0	3/4	G3
Gator G5™	**596-310**		16-1/4	5/8			3.00/.203	0	1	High-Lift Xtended Fusion® G5
Gator G6®	**396-716**		16-1/4	5/8			3.00/.250	0	1	Heavy-Duty High-Lift Xtended Fusion® G6
(3) for 48" cut	**91-606**	1757303YP	**16-1/2**	13/16			2.25/.149	0	5/8	
Gator G6	**391-606**		16-1/2	13/16			3.00/.250	0	1	Heavy-Duty High-Lift Xtended Fusion® G6

B

Blades - OEM Replacements

Massey Ferguson

	OREGON	OEM No.	Length	Center	Outer	C to C	W / T	Off	Lift	Prod. Code
(3) for 50" cut, 2600	**91-706**	1726453ASM	**18-1/8**	3/4	3/8	2-9/16	2.00/.203	0	1	
Gator G3	**90-698**	1726453ASM	18-1/8	3/4	3/8	2-9/16	2.50/.203	0	3/4	G3
Gator G5	**590-698**		18-1/8	3/4	3/8	2-9-16	3.00/.187	0	1	High-Lift Xtended Fusion® G5
Gator G6	**390-698**		18-1/8	3/4	3/8	2-9/16	3.00/.250	0	1	Heavy-Duty High-Lift Xtended Fusion® G6
(3) for 52" cut, 2300, MF2523, MF355X, MRZT26520	**99-133**	1737252 1737252BZYP	**18-1/2**	3/4			2.50/.203	0	1-1/1	
Gator® G3™	**96-133**	11913 11914 11949 539118672 539118673	18-1/2	3/4			2.50/.203	0	3/4	G3
Gator G5™	**599-133**		18-1/2	3/4			3.00/.203	0	1	High-Lift Xtended Fusion® G5
(3) for 61" cut, 3900	**91-209**	5101755S 5101755SYP	**21**	5/8			2.50/.250	0	1	Xtended
(3) for 61" cut, 3900	**91-628**		21	5/8			3.00/.203	0	1-1/2	Xtended
(3) for 61" cut, 3900	**91-308**	5104045SYP	21	5/8			2.50/.203	0	1	
(3) for 61" cut, 3900	**91-626**		21	5/8			2.50/.203	0	1	
(3) for 61" cut, 3900	**93-008**		21	5/8	1/4	1-5/8	2.50/.250	0	1-3/16	Xtended
(3) for 61" cut, 3900	**95-078**		21	5/8			2.50/.250	0	1	

GROUP CONTINUES

Massey Ferguson

	OREGON	OEM No.	Length	Center	Outer	C to C	W / T	Off	Lift	Prod. Code
			GROUP CONTINUES							
(3) for 61" cut, mulching, 3900	**91-596**		21	5/8			2.50/.203	0	1	
Gator G3	**96-347**		21	5/8			2.50/.203	0	3/4	G3
Gator G5	**596-347**		21	5/8			3.00/.203	0	1	High-Lift Xtended Fusion® G5
Gator G6®	**396-727**		21	5/8			3.00/.250	0	1	Heavy-Duty High-Lift Xtended Fusion® G6
(2) for 42" cut	**91-605**	1737816BM 1737816BMYP	**21-3/16**	13/16			2.25/.149	7/16	13/16	
Gator G6	**391-605**		21-3/16	13/16			3.00/.250	7/16	1	Heavy-Duty High-Lift Xtended Fusion® G6
(2) for 42" cut	**91-607**	1758878BMYP	**21-5/16**	13/16			2.25/.149	0	5/8	
Gator® G6®	**391-607**		21-5/16	13/16			3.00/.250	0	1	Heavy-Duty High-Lift Xtended Fusion® G6
(1) 91-723 & (1) 91-701 for 38" cut, 2521, 25195	**91-701**	1704101 1704101A 1704101ASM 1716695ASM	**22-1/4**	3/4	3/8	2-9/16	2.00/.203	0	1-1/16	
Gator G3™	**96-654**		22-1/4	3/4	3/8	2-9/16	2.50/.203	0	3/4	G3
(3) for 72" cut	**91-609**	5102227S	**25**	5/8			2.50/.250	0	1	
Gator G6	**396-731**		25	5/8			3.00/.250	0	1	Heavy-Duty High-Lift Xtended Fusion® G6

B

Blades - OEM Replacements

MTD

	OREGON	OEM No.	Length	Center	Outer	C to C	W / T	Off	Lift	Prod. Code
(2) 98-487 & (1) 98-486 for 46" cut, high-lift	**98-486**	742-0486 742-0486A 942-0486 942-0486A	**14-13/16**	3/8	5/16	2-1/2	3.00/.149	5/16	1-1/4	
(1) 98-056 & (2) 98-057 for 46" cut - star center hole, center blade for 600" & 800 series, deep deck, 1996 & before	**98-056**	742-0543 942-0543	**14-13/16**	11/16 6 pt. Star	5/16	2-1/2	3.00/.120	5/16	1-1/8	
(1) 98-069 and (2) 98-054, for 46" cut - star center hole, center blade for 46" cut model series 600 and 800 built since 1997	**98-069**	742-0645 942-0645	**14-7/8**	5/8 6 pt. Star			3.00/.120	5/16	1-3/16	
Gator G3	**98-670**		14-7/8	5/8 6 pt. Star			2.50/.187	5/16	3/4	G3
(1) 98-061 & (2) 198-063 for 46" cut - star center hole, center blade, 3 in 1 mulching blade, 1999 & after, fits auto-drive step through tractors	**98-061**	742-0612 742-0612A 942-0612 942-0612A	14-7/8	5/8 6 pt. Star			2.50/.149	7/16	1-3/16	Xtended
(1) 98-084 & (2) 98-085 for 46" cut - star center hole, center blade, 3 in 1 mulching blade, 1999 & after, fits auto-drive step through tractors	**98-084**		14-7/8	5/8 6 pt. Star			2.50/.203	7/16	1-1/8	Xtended
Gator® G3™	**98-637**	742-04049 742-04124-X 742-0612-X 942-04124-X 942-0612-X	14-7/8	5/8 6 pt. Star			2.50/.187	7/16	3/4	G3
(3) for 44" cut	**91-414**	742-03002-0637 742-3002 759-3812	**15-1/8**	3/4			2.50/.203	1/2	11/16	
(3) for 44" cut	**91-073**	742-3036 759-3929 759-3939 OCC-742-3036	**16**	3/4	5/16	2-1/2	2.50/.203	9/16	1-1/8	
(3) for 44" cut	**98-080**	02005020 1008616	16	3/4			3.00/.203	7/16	1-5/16	
Gator G5™	**596-373**		16	3/4	5/16	2-1/2	3.00/.187	1/2	1	High-Lift Xtended Fusion® G5

B

MTD

	OREGON	OEM No.	Length	Center	Outer	C to C	W / T	Off	Lift	Prod. Code
(2) for 32" cut, (2) 98-487 & (1) 98-486 for 46" cut, side discharge decks	**98-487**	742-0487 742-0487A 942-0487A	**16-1/4**	3/8	5/16	2-1/2	3.00/.149	5/16	1-3/16	
(1) 91-330 & (1) 91-327 for 46" cut, (2) for 32" cut, outside blade for 46" cut	**91-330**	742-3011 742-3011-0637 759-3819	**16-1/4**	3/4			3.00/.203	5/16	1-3/8	
(2) 198-063 & (1) 98-061 for 46" cut - star center hole, outside blades, 3 in 1 mulcher, 1999 & after,fits auto-drive step through tractors	**198-063**	742-0611 742-0611A 942-0611 942-0611A	**16-1/4**	5/8 6 pt. Star			2.50/.149	7/16	1-1/8	
							Xtended			100
(2) 98-085 & (1) 98-084 for 46" cut - star center hole, outside blades, 3 in 1 mulcher, 1999 & after,fits auto-drive step through tractors	**98-085**		16-1/4	5/8 6 pt. Star			2.50/.203	7/16	1-1/8	
							Xtended			
Gator® G3™	**98-640**	742-04043 742-04125-X 742-0611-X 942-04125-X 942-0611-X	16-1/4	5/8 6 pt. Star			2.50/.187	7/16	3/4	G3
Gator G5™	**598-640**		16-1/4	5/8 6 pt. Star			3.00/.164	7/16	1	
							High-Lift Xtended Fusion®			G5
(2) 98-054 & (1) 98-069 for 46" cut, outside blades for 46" cut model series 600 & 800 built since 1997	**98-054**	742-0644 942-0644	**16-1/4**	5/8 6 pt. Star			3.00/.120	5/16	1-3/16	
Gator G3	**98-634**		16-1/4	5/8 6 pt. Star			2.50/.187	5/16	3/4	G3
(1) 98-083 & (2) 98-082 for 46" cut LT1046, center blade, round hole	**98-082**	742-04015 759-04019	**16-5/16**	3/4			2.50/.203	7/16	1-1/8	
							Xtended			
(2) 98-057 & (1) 98-056 for 46" cut, outside blades for 600 & 800 series, deep deck, 1996 and before	**98-057**	742-0542 942-0542	**16-1/4**	11/16 6 pt. Star	5/16	2-1/2	3.00/.120	5/16	1-3/16	

B

Blades - OEM Replacements

MTD

	OREGON	OEM No.	Length	Center	Outer	C to C	W / T	Off	Lift	Prod. Code
(3) for 50" cut, side discharge, fits models 985, 992, 993, 958, 998 1997 & before	**98-037**	742-0171 742-0171B 942-0171B OEM-742-0171B	**17-1/4**	3/8	5/16	2-1/2	2.50/.187	5/16	1-1/8	
	98-152 NEW	942-05052	**17-1/4**	5/8 5 pt. Star			2.50/.164	9/16	1-3/16	
(3) for 50" cut, built since 1998	**98-064-1**	742-0623 942-0623 OEM-742-0623	**17-5/16**	5/8 6 pt. Star			2.50/.187	1/4	1-3/16	
Gator® G5™	**598-064**		17-5/16	5/8 6 pt. Star			3.00/.149	5/16	1	High-Lift Xtended Fusion® G5
(3) for 50" cut	**198-086**	742-04053 742-04053A 742-04053B 742-04053C 942-04053 942-04053A 942-04053B 942-04053C	**17-7/8**	5/8 6 pt. Star			2.50/.149	7/8	3/4	Xtended 100
(3) for 50" cut, high-lift bagger	**98-097**	742-04056 742-04056-0637 742-04056A 742-04056B 742-04056B-0637 742-04056C 942-04056A 942-04056C	17-7/8	5/8 6 pt. Star			2.50/.149	15/16	1-3/8	
Gator G3™	**91-938**	942-04053-X	17-7/8	5/8 6 pt. Star			2.50/.187	15/16	3/4	G3
Gator G5	**591-938**		17-7/8	5/8 6 pt. Star			3.00/.164	15/16	1	High-Lift Xtended Fusion® G5
(2) for 33" cut, wide-area mowers, 12AE764H099, 12AE76JU099, 12AE764Y099, 12A-764M099, 12A-764M799, 12A-764R299	**98-094**	742-04154 742-04154A 942-04154 942-04154A	**17-7/8**	bow-tie			2.50/.149	1	1-1/8	
Gator G3	**98-671**		17-7/8	bow-tie	5/16	2-1/2	2.50/.149	1	3/4	G3

B

MTD

	OREGON	OEM No.	Length	Center	Outer	C to C	W / T	Off	Lift	Prod. Code
(3) for 50" cut, LT1024, LT1050	**98-087**	742-04068 742-04068C 759-04047 OCC-742-04068	**17-7/8**	3/4			2.50/.149	1	1-1/8	Xtended
Gator G3	**96-387**		17-7/8	3/4			2.50/.187	1	3/4	Xtended — G3
Gator G5	**596-387**		17-7/8	3/4			3.00/.164	15/16	1	High-Lift Xtended Fusion® — G5
(3) for 50" cut, M50-KHS, Z Force	**92-015**	01010168 01010168-0637 01010168-X OCC-01010168	**17-7/8**	3/4			2.50/.203	0	1	
Gator® G5™	**592-015**		17-7/8	3/4			3.00/.164	0	1	High-Lift Xtended Fusion® — G5
18" cut, mulcher - 1995 and after, fits bowtie centerhole	**98-065**	742-0738 942-0738 OEM-742-0738	**18**	bow-tie	5/16	2-1/2	2.25/.134	5/16	1-1/8	
(2) for 36" cut, side discharge, deep deck - 1989 & after	**98-496**	742-0496 742-0496A 942-0496 942-0496A OEM-742-0496	**18-5/16**	3/4	5/16	2-1/2	3.00/.149	5/16	1-1/8	
(3) for 54" cut, 2002 and newer	**98-072**	490-110-M117 742-0677 742-0677A 742-0677B 942-0677 942-0677A 942-0677B OEM-742-0677	**18-1/2**	5/8 6 pt. Star			3.00/.203	1/2	1-1/4	Xtended
Gator G3™	**98-672**	942-04338-0684 942-0677-S	18-1/2	5/8 6 pt. Star			2.50/.203	1/2	1	G3
Gator G5	**598-672**		18-1/2	5/8 6 pt. Star			3.00/.203	1/2	1	High-Lift Xtended Fusion® — G5
Gator G6®	**398-672**		18-1/2	5/8 6 pt. Star			3.00/.250	1/2	1	Heavy-Duty High-Lift Xtended Fusion® — G6

B

Blades - OEM Replacements

MTD

	OREGON	OEM No.	Length	Center	Outer	C to C	W / T	Off	Lift	Prod. Code
	98-151 NEW	942-05056	**18-5/8**	5/8 5 pt. Star			2.50/.164	9/16	1-3/16	
(2) for 38" cut, side discharge, fits models 476, 487, 490, 493, 494, 495, 496, 497, 497F, 497P, 498, 628, 720, 760, 765 S/D, 138-495A, 138-497A, W7-BG-497B, etc.	**98-019**	0301-000 031203 07714 742-0122 742-0122A 942-0122A 942-0122B	**18-7/8**	3/8	5/16	2-1/2	2.00/.134	5/16	7/8	
19" cut, mulching, 11A-18M9002, 11A-18MZ202, 12A-18M7002, 12AE189D011, 12AE189E211, 12AE18JA002	**92-140**	942-0739	**19**	bow-tie	5/16	2-1/2	2.25/.134	1/4	1-1/8	
(3) for 54" cut, Tank, M54	**98-091**	01005337P 1005337 2005018 942-04416	**19**	3/4			3.00/.203	7/16	1-5/16	
Gator® G3™	**96-351**	02005018-X 742-04416-X 942-04416-X	19	3/4			3.00/.203	9/16	1	G3
Gator G5™	**596-351**		19	3/4			3.00/.203	5/8	1	High-Lift Xtended Fusion® G5
(2) 98-537 & (2) 98-539 for 38" cut, side discharge, deep deck - 1992 & after	**98-537**	742-0537 942-0537	**19-5/16**	3/8	7/16	2-1/2	3.00/.149	5/16	1	
(2) for 38" deck for bagging, (1) 98-044 & (1) 98-043 - 1986 to 1996 in non-bagging operations, right-hand side	**98-044**	490-110-M111 742-0323 742-0473 742-0473A 742-0504 742-0504A 942-0473A 942-0504 942-0504A OEM-742-0473 OEM-742-0473A	19-5/16	3/8	5/16	2-1/2	3.00/.149	5/16	1-3/8	
(2) for 38" cut, sand blade, deep deck 1986-1996	**98-493**	742-0493 942-0493	19-5/16	3/8	5/16	2-1/2	3.00/.149	5/16	1-3/16	
(2) for 38" cut	**91-329**		**19-3/8**	3/4			3.00/.203	5/16	7/8	

GROUP CONTINUES

MTD

	OREGON	OEM No.	Length	Center	Outer	C to C	W / T	Off	Lift	Prod. Code
(2) for 38" cut, mulching	**91-057**	742-0322 942-0473A	19-3/8	3/4	5/16	2-1/2	2.75/.187	5/16	1-1/2	
Gator G3	**96-697**		19-3/8	3/4			3.00/.203	5/16	3/4	G3
(2) for 38" cut, star center hole, mulcher, MTD , 3 in 1 blade, deep deck - 1992 & after	**198-058**	4720610 490-110-M114 742-0610 742-0610A 742-0610A-0637 942-0610 942-0610A GW-7420610 OEM-742-0610	**19-5/16**	5/8 6 pt. Star			2.75/.149	3/8	1-1/2	Xtended 100
(2) for 38" cut, use in place of our 198-058 for non-mulching	**198-052**	742-0654 942-0654	19-5/16	5/8 6 pt. Star			3.00/.149	5/16	1-1/4	Xtended 100
Gator® G3™	**98-628**		19-5/16	5/8 6 pt. Star			2.50/.187	5/16	3/4	G3
Gator G5™	**598-628**		19-5/16	5/8 6 pt. Star			3.00/.164	5/16	1	High-Lift Xtended Fusion® G5
20" cut, for walk-behinds with a splined shaft	**98-001**	742-0620 742-0720 942-0500 942-0620 942-0720 OEM-742-0620	**20**	13/16	3/8	2-1/2	2.25/.134	5/16	7/8	
20" cut, mulcher	**98-066**	490-100-M088 742-0740 942-0740 OEM-742-0740	**20**	bow-tie	5/16	2-1/2	2.25/.134	5/16	1-1/8	
20" cut, high-lift blade, fits walk-behind mowers since 1997 with bowtie center hole	**98-068**	490-100-M115 742-0640 942-0640 OEM-742-0640	20	bow-tie	5/16	2-1/2	2.25/.134	5/16	13/16	

GROUP CONTINUES

Blades - OEM Replacements

MTD

	OREGON	OEM No.	Length	Center	Outer	C to C	W / T	Off	Lift	Prod. Code
(3) for a 60" cut, 3660 and Z Force, some Tanks	**91-144**	01001805 01003280 01003805 01004719 01004719P 1004719-0637 OCC-01004719	**20-1/2**	3/4			3.00/.203	1/2	1-5/16	
Gator G3	**96-677**		20-1/2	3/4			3.00/.203	1/2	1	G3
21" cut, mulching blade for models 312R, 313R, 315R, 488, 828, 848, 100, 400, 500, s 800 - 1993 & after, walk-behind	**98-007**	742-0563 742-0721 942-0721 OEM-742-0721	**20-15/16**	13/16	3/8	2-1/2	2.25/.134	5/16	15/16	
21" cut, rear bagger, fits models 312R, 313R, 315R, 488, 828, 848	**98-002**	742-0306 742-0306A 742-0490 742-0521 742-0621 942-0621 OEM-742-0621	20-15/16	13/16	3/8	2-1/2	2.25/.134	1/4	13/16	
Gator® G3™	**98-102**		20-15/16	13/16	3/8	2-1/2	2.50/.134	5/16	3/4	G3
21" cut, mulcher, 1995 and newer, fits bowtie center hole	**198-049**	01002810 490-100-M084 742-04100 742-04276 742-04276S 742-0741 742-0741A 942-04100 942-0741 942-0741A OEM-742-0741	**21**	bow-tie	5/16	2-1/2	2.25/.134	1/4	15/16	Xtended 100
Gator G3	**98-631**	742-04380 742-04380-0684 742-0741A-X 742-0741-S 942-04380 942-04380-0684 942-0741A-X 942-0741-X	21	bow-tie	5/16	2-1/2	2.50/.187	5/16	3/4	G3
Gator G5	**598-631**		21	bow-tie	5/16	2-1/2	3.00/.149	5/16	1	High-Lift Xtended Fusion® G5
(3) for 60" cut, 325, 374	**91-442**	759-3411 759-3839 IH-83614-C1	**21**	1/2			2.00/.250	7/16	1-1/8	
(3) for 60" cut, Tank and RECON	**98-071**	01005338 01005338P 02005019 742-04415 942-04415	**21**	3/4			3.00/.203	1/2	1-5/16	

GROUP CONTINUES

MTD

	OREGON	OEM No.	Length	Center	Outer	C to C	W / T	Off	Lift	Prod. Code
			GROUP CONTINUES							
Gator® G3™	**96-300**	02005019-X 742-04415-X 742-04415-XG 942-04415-X	21	3/4			3.00/.203	1/2	1	G3
Gator G5™	**596-300**	02005019-X 742-04415-X 742-04415-XG 942-04415-X	21	3/4			3.00/.203	1/2	1	High-Lift Xtended Fusion® G5
(2) for 42" cut, RZT-17	**98-088**		**21-1/8**	5/8 6 pt. Star			3.00/.164	3/8	1-5/16	
(2) for 42" cut, LT1042	**98-090**	490-110-C119 742-04126 942-04126 OCC-742-04126	21-1/8	5/8 6 pt. Star			2.75/.187	1/4	1-3/8	
(2) for 42" cut, mulching, LT1042	**91-058**	490-110-C129 742-04101 759-04081 759-3830 CC-742-3033 OCC-742-04101	**21-1/8**	3/4	5/16	2-1/2	2.75/.187	1/4	1-3/8	
Gator G3	**91-635**	759-3830-X	21-1/8	3/4	5/16	2-1/2	2.50/.187	1/4	3/4	G3
Gator G5	**591-635**		21-1/8	3/4	5/16	2-1/2	3.00/.164	5/16	1	High-Lift Xtended Fusion® G5
(2) for 42" cut, high-lift, 1990-1996	**98-499**	490-110-M112 742-0499 742-0499A 742-0508 742-0508A 942-0499 942-0499A 942-0508 942-0508A OEM-742-0499 OEM-742-0499A	**21-3/16**	3/8	5/16	2-1/2	3.00/.149	5/16	1-1/4	
Gator G5™	**598-600**		21-3/16	3/8	5/16	2-1/2	3.00/.149	5/16	1	High-Lift Xtended Fusion® G5

B

Blades - OEM Replacements

MTD

	OREGON	OEM No.	Length	Center	Outer	C to C	W / T	Off	Lift	Prod. Code
(2) for 42" cut, deep deck - 1997 & after; auto-drive 1999 & after	**98-093**	490-110-M108 742-04308 742-0656 942-04308 942-0656 OEM-742-04308	**21-3/16**	5/8 6 pt. Star			2.75/.149	3/8	7/8	
(2) for 42" cut, high-lift, deep deck - 1997 & after; auto-drive 1999 & after	**198-153**	742-04087 942-04087	21-3/16	5/8 6 pt. Star			3.00/.149	5/16	1-1/4	Xtended — 100
(2) for 42" cut, mulcher, deep deck - 1997 & after; auto-drive 1999 & after	**198-059**	490-110-M115 7420616 742-0616A 942-0616 942-0616A GW-7420616 OEM-742-0616	21-3/16	5/8 6 pt. Star			2.75/.149	3/8	1-1/2	Xtended — 100
Gator G3	**98-629**	742-04312 742-04410 742-4360 942-04308-X 942-04312 942-04312-X 942-04360-0684 942-04410 942-04410-0684 942-0616-X 942-4360	21-3/16	5/8 6 pt. Star			2.50/.187	5/16	3/4	G3
Gator G5	**598-629**		21-3/16	5/8 6 pt. Star			3.00/.164	5/16	1	High-Lift Xtended Fusion® — G5
(2) for 42" cut, lawn tractors	**91-332**	742-3018 759-3824	**21-1/4**	3/4	5/16	2-1/2	3.00/.203	3/8	15/16	
Gator G3	**96-350**	742-04374 942-04374	21-1/4	3/4	5/16	2-1/2	2.50/.203	3/8	1	G3
	98-067 NEW	742-04312	**21-1/4**	5/8 5 pt. Star			2.50/.164	9/16	1-3/16	
(1) for 22" cut, walk-behind mower, recycler	**94-322**	742-04135-4045	**21-11/16**	7/16	3/8	2-1/2	2.25/.149	7/16	13/16	
Gator® G3™	**96-607**		21-11/16	7/16	3/8	2-1/2	2.25/.149	7/16	3/4	G3

B

MTD

	OREGON	OEM No.	Length	Center	Outer	C to C	W / T	Off	Lift	Prod. Code
22" cut, mulcher, used on models with splined shaft, models 050, 060, 070, 080, 200, 500- 1993 & after	**98-005**	742-0522 742-0572 742-0622 742-0722 942-0622 942-0722 OEM-742-0622 OEM-742-0722	**21-15/16**	13/16	3/8	2-1/2	2.25/.134	5/16	1-1/8	
22" cut, mowers after 1995, fits bowtie center hole	**98-050**	490-100-M087 742-0642 742-0642A 942-0642 942-0642A OEM-742-0642	**21-15/16**	bow-tie	5/16	2-1/2	2.25/.134	5/16	13/16	
22" cut, mulcher	**98-051**	742-0742 742-0742A 942-0742 942-0742A OEM-742-0742	21-15/16	bow-tie	5/16	2-1/2	2.25/.134	1/4	15/16	
2-in-1 blade for side discharge and bagging, fits lawn tractors and RZTs with 42" timing deck (2009 and newer)	**98-095** NEW	942-04217	**22**	5/8 5 pt. Star			3.15/.149	1/4	1-1/2	
(2) for 46" cut, LTX1045, LTX1046, LTX1046VT	**98-096**	490-110-C131 742-04244 742-04244A 742-04290 942-04244 942-04244A 942-04290 OCC-742-04244	**23-1/4**	5/8 6 pt. Star			3.75/.149	1/4	1-3/8	
Gator G3 Will not work on 2014 and newer 46" stamped decks	**96-401**	742-04290-X 742-04361 942-04244A-X 942-04244-X 942-04361 942-04361-0684	23-1/4	5/8 6 pt. Star			3.00/.149	1/4	1	G3
Gator G6®, (3) for 72" cut, Tank	**396-815**	01007522 742-04418 742-04418-0637	**25**	3/4			3.00/.250	0	1	Heavy-Duty High-Lift Xtended Fusion® G6

B

Blades - OEM Replacements

Murray

	OREGON	OEM No.	Length	Center	Outer	C to C	W / T	Off	Lift	Prod. Code
(3) for 46" cut, high-lift, 1991-1998 all decks	**97-123**	092117E701 092117E701MA 492117 492117MA 5511 5511MA 92117E700	**15-3/4**	13/16			2.25/.134	5/8	1	
(3) for 46" cut, high-lift, heavy-duty version of 97-123	**97-012**		15-3/4	13/16			2.25/.187	5/8	1	
(3) for 46" cut, mulcher, also used on Scotts mower, Murray "3 in 1" blade	**97-017**	056631E701 056631E701MA 456631 4566313 4566313MA 456631MA 5510 5510MA 56631E700 56631E701 656631	15-3/4	13/16			2.25/.134	11/16	1-1/8	
Gator® G3™	**97-606**		15-3/4	13/16			2.50/.187	5/8	3/4	G3
Gator G5™	**597-606**		15-3/4	13/16			3.00/.164	5/8	1	High-Lift Xtended Fusion® G5
(1) 91-615 & (2) 91-616 for 54" cut	**91-615**	1736044AYP	**16**	1	3/8	2-9/16	2.50/.203	0	1-1/4	
(3) for 46" cut	**99-132**	1737228BM 1737228BZYP	**16-1/8**	3/4			2.50/.203	0	1-1/16	
Gator G5	**599-132**	1739889AYP	16-1/8	3/4			3.00/.203	0	1	High-Lift Xtended Fusion® G5
(3) for 48" cut	**195-062**	180054	**16-11/16**	5 pt. Star	5/16	3-15/16	2.50/.203	0	1-1/4	Xtended 100
(3) for 48" cut, mulching	**95-068**		16-11/16	5 pt. Star			2.50/.203	5/16	13/16	Xtended

GROUP CONTINUES

B

Murray

	OREGON	OEM No.	Length	Center	Outer	C to C	W / T	Off	Lift	Prod. Code
			GROUP CONTINUES							
Gator® G3™	**96-615**		16-11/16	5 pt. Star			2.50/.203	0	1	G3
Gator G5™	**596-615**		16-11/16	5 pt. Star			3.00/.187	0	1	High-Lift Xtended Fusion® G5
(3) for 48" & 50" cut, LT rail frame models, used on Scotts mower, Murray 3 in 1 blade	**97-018**	094692E701 094692E701MA 774048 774048MA 774052 7740523 7740523MA 774052MA 7769205 94692 94692E700	**17-11/16**	13/16			2.25/.149	3/8	1-1/8	
(3) for 54" cut	**195-072**	187256	**18-7/16**	5 pt. Star	5/16	3-15/16	2.75/.187	1/2	1-3/16	Xtended 100
(3) for 54" cut, mulching	**95-082**		18-7/16	5 pt. Star			2.50/.187	5/16	13/16	
Gator G3	**95-605**		18-7/16	5 pt. Star			2.50/.187	1/2	3/4	G3
Gator G5	**595-605**		18-7/16	5 pt. Star			3.00/.164	1/2	1	High-Lift Xtended Fusion® G5
(2) for 36" cut, high-lift, 1977-1988	**97-105**	020930 02400 024116 025116 054372 054390E701 20930 2400 24116 25116 402400 429305 42930S 4543903 4543903MA 454390MA 54372 54390 54390HT	**18-3/16**	7/8 h 1" w			2.25/.149	3/16	15/16	
(2) for 38" cut	**195-033**	193957	**19-1/4**	5 pt. Star	3/8	3-1/8	2.25/.134	1/8	1-1/16	Xtended 100
(2) for 38" cut, heavy-duty version of 195-033	**95-038**		19-1/4	5 pt. Star			2.25/.187	1/8	1-1/16	
(2) for 38" cut, high-lift	**95-047**		19-1/4	5 pt. Star			2.25/.187	0	1	

GROUP CONTINUES

B

Blades - OEM Replacements

Murray

GROUP CONTINUES

	OREGON	OEM No.	Length	Center	Outer	C to C	W / T	Off	Lift	Prod. Code
(2) for 38" cut, mulching	**195-003**		19-1/4	5 pt. Star	5/16	3-1/8	2.25/.134	1/8	7/8	Xtended 100
(2) for 38" cut, mulching, heavy-duty version of 195-003	**95-099**		19-1/4	5 pt. Star			2.25/.149	1/8	1	
Gator® G3™	**95-601**		19-1/4	5 pt. Star			2.50/.187	0	3/4	G3
Gator G5™	**595-601**		19-1/4	5 pt. Star			3.00/.164	0	1	High-Lift Xtended Fusion® G5
(2) for 38" cut, sand blade, low-lift	**97-010**	092003E701 092003E701MA 92003E701	**19-7/16**	13/16			2.25/.120	3/8	1	
(2) for 38" cut, mulcher, Murray "3 in 1" blade	**97-021**	092543E701 092543E701MA 095104E701 095104E701MA 4951043 4951043MA 495104MA 5519 5519MA 7101751 7101751A 7101751AMA 95104E701	19-7/16	13/16			2.25/.134	5/16	1	
Gator G5	**597-602**		19-7/16	13/16			3.00/.164	3/8	1	High-Lift Xtended Fusion® G5
(2) for 36" & 38" cut, high-lift	**97-107**	091742E701 091742E701MA 491742 491742MA 540MA 5540 91742E700	**19-7/16**	13/16			2.25/.134	5/8	1-1/8	
(2) for 36" & 38" cut, high-lift, heavy-duty	**97-118**		19-7/16	13/16			2.25/.187	5/8	1-3/16	
20" cut, low-lift	**97-016**	042785E701 042785E701MA 642785 642785E701	**19-5/8**	3/8			2.25/.134	3/8	11/16	
20" cut, Murray "3 in 1" blade	**97-022**	5536 5536MA 671921E701 672763E701 672763E701MA	**19-7/8**	3/8			2.25/.134	3/8	7/8	

B

Murray

	OREGON	OEM No.	Length	Center	Outer	C to C	W / T	Off	Lift	Prod. Code
(2) for 40" cut, Murray "3 in 1" blade	**97-024**	092544E701 092544E701MA 095103E701 095103E701MA 095103E701WMA 92544E701 95103E701 951103E701	**20-5/16**	13/16			2.25/.134	5/16	1	
(2) for 40" cut, high-lift for bagging, 40603, 40604, 40606, 40620, 40622, 1989-98 models	**97-109**	091871E701 091871E701MA	**20-3/8**	13/16			2.25/.134	7/16	1-1/16	
(2) for 40" cut, high-lift, heavy-duty	**97-119**	491871 491871MA 5547 5547MA 91871E700	20-3/8	13/16			2.25/.187	7/16	1-1/8	
(2) for 40" cut, low-lift & sand blade	**97-006**	092002E701 092002E701MA 92002E701	20-3/8	13/16			2.25/.134	3/8	1	
Gator® G3™	**97-604**		20-3/8	13/16			2.50/.187	7/16	3/4	G3
(1) 91-615 & (2) 91-616 for 54" cut	**91-616**	1736043AYP	**20-9/16**	1	3/8	2-9/16	2.50/.203	0	1-1/4	
Gator G3	**96-398**		20-9/16	1	3/8	2-9/16	2.50/.203	0	1	G3
21" cut, blade for bagging, 1983-1989	**97-110**	022860E701 22860 22860E701 422860 42739 5518MA	**20-7/8**	3/8	5/16 x 1/2	2-5/16	2.25/.149	3/8	3/4	
(2) for 42" cut	**195-032**	138971	**21**	5 pt. Star	5/16	3-1/8	2.25/.149	1/8	1-1/16	Xtended 100
(2) for 42" cut, heavy-duty version of195-032	**195-039**		21	5 pt. Star	5/16	3-1/8	2.25/.187	1/8	1-1/18	Xtended 100
(2) for 42" cut, sand	**195-048**		21	5 pt. Star	5/16	3-1/8	2.25/.187	0	3/4	Xtended 100

GROUP CONTINUES

B

Blades - OEM Replacements

Murray

	OREGON	OEM No.	Length	Center	Outer	C to C	W / T	Off	Lift	Prod. Code
			GROUP CONTINUES							
(2) for 42" cut, mulching	**195-005**		21	5 pt. Star			2.25/.134	1/8	7/8	Xtended 100
(2) for 42" cut, mulching, heavy-duty version of 195-005	**195-019**		21	5 pt. Star			2.25/.149	1/8	15/16	Xtended 100
Gator® G3™	**96-900**		21	5 pt. Star			2.50/.187	0	3/4	G3
Gator G5™	**596-900**		21	5 pt. Star			3.00/.164	0	1	High-Lift Xtended Fusion® G5
(2) for 42" cut	**91-610**	1731898ASM	**21-3/16**	1			2.25/.149	7/16	1	
Gator G6®	**391-610**		21-3/16	1			3.00/.250	7/16	1	Heavy-Duty High-Lift Xtended Fusion® G6
(2) for 42" cut, also used on Scotts mower, Murray "3 in 1" blade	**197-019**	095100E701 095100E701MA 495100 4951003 4951003MA 495100MA 5539 5539MA 721392 721392A 721392BM 7769203 95100 95100E701	**21-1/4**	7/8	3/8	3-9/16	2.25/.134	3/8	1	Xtended 100
(2) for 42" cut, high-lift	**97-020**	095101E701 095101E701MA 5527 5527MA 95101E701	21-1/4	7/8			2.25/.134	7/16	1	
(2) for 42" cut, high-lift	**97-008**	492418 492418MA 92418E701	21-1/4	7/8			2.25/.149	3/8	1-1/8	
(2) for 42" cut, high-lift, heavy-duty	**97-013**		21-1/4	7/8			2.25/.187	3/8	1-1/8	

GROUP CONTINUES

B

Murray

	OREGON	OEM No.	Length	Center	Outer	C to C	W / T	Off	Lift	Prod. Code
GROUP CONTINUES										
(2) for 42" cut, low-lift, non-bagging, heavy-duty	**97-014**	0905101E701 92419 92419E701	21-1/4	7/8			2.25/.149	7/16	13/16	
(2) for 42" cut, mulcher, 1992-96, Murray "3-in-1" blade	**97-005**	056252E701 056252E701MA 456252 456252MA 56252E701	21-1/4	13/16			2.75/.134	5/16	13/16	
Gator® G3™	**97-601**		21-1/4	7/8			2.50/.187	3/8	3/4	G3
Gator G5™	**597-601**		21-1/4	7/8			3.00/.164	3/8	1	High-Lift Xtended Fusion® G5
22" cut, walk-behind	**99-134**	1101823 1101823E701 1101823E701MA 5570 5570MA	**21-5/8**	3/8	3/8	1-7/8	2.25/.134	1/4	1-1/8	
22" cut, high-lift	**97-015**	042225E701 042225E701MA 42225E701 442225 442225MA	**21-7/8**	3/8			2.25/.134	3/8	11/16	
22" cut, mulcher, 1987 to present, Murray "3 in 1" blade	**97-001**	07113E701 1101120E701 1101120E701MA 471499 4714993 4714993MA	21-7/8	3/8			2.25/.149	3/8	1-5/16	
			471499MA 672059E701 672735E701							
(1) for 22" cut, walk-behind	**91-611**	7103288YP	**22**	3/8	3/8	2-3/4	2.25/.164	3/16	1-1/4	Xtended
Gator® G5™	**591-611**	7103288YP	22	3/8	3/8	2-3/4	3.00/.134	5/16	1	High-Lift Xtended Fusion® G5

B

Blades - OEM Replacements

Murray

	OREGON	OEM No.	Length	Center	Outer	C to C	W / T	Off	Lift	Prod. Code
	99-131	7104196BMYP	**28**	1-1/16	1/2	7-1/2	2.75/.164	1/4	13/16	
28" cut, rear engine, no deflector holes										
	99-113		28	1-1/16	1/2	7-1/2	2.75/.164	1/4	13/16	
28" cut, rear engine, punched for high-lift deflector 79-728										
	99-114		28	1-1/16	1/2	7-1/2	2.75/.187	1/4	13/16	
28" cut, rear engine, heavy-duty, punched for high-lift deflector 79-728										
	96-628		28	1-1/16	1/2	7-1/2	2.75/.187	1/4	3/4	G3
Gator G3™										
	596-628		28	1-1/16	1/2	7-1/2	3.00/.187	5/16	1	G5
Gator G5										High-Lift Xtended Fusion®
	97-330	055969E701 055969E701MA 056246E701 056246E701MA 056246E701WMA 5557	**30**	13/16			2.75/.149	5/8	1-1/8	
		5557MA 55969 55969MA 56246E701								
30" cut, high-lift for bagging										

Can't find what you're looking for?
Try us online to search the latest products available.

OregonProducts.com

Poulan

OREGON	OEM No.	Length	Center	Outer	C to C	W / T	Off	Lift	Prod. Code
95-014	532106635	**15-3/8**	3/8			2.25/.187	0	1	
(3) for 44" cut, models XEG1182VAR, PP1844B, PP16H44, 418014 (2006-01), 418024 (2006-01), 418034 (2006-01), PP14H44, PP14H44A, PP16H44, PP16H44B, PP16H44C, PP1844, PP1844B, XEG1182VAR									
95-607		15-3/8	3/8			2.25/.187	0	3/4	G3
Gator® G3™									
195-062	532180054 539107519 575938201 575938301	**16-11/16**	5 pt. Star	5/16	3-15/16	2.50/.203	0	1-1/4	100
(3) for 48" cut, high-lift, PB20VA48, PB23H48LGT, PB23H48YT, PP22V48						Xtended			
95-068	532173921	16-11/16	5 pt. Star			2.50/.203	5/16	13/16	
(3) for 48" cut, mulching, PB20VA48 (2008-2013), PB23H48YT (2004-2013)						Xtended			
96-615		16-11/16	5 pt. Star			2.50/.203	0	1	G3
Gator G3									
596-615		16-11/16	5 pt. Star			3.00/.187	0	1	G5
Gator G5™						High-Lift Xtended Fusion®			
95-027	532121798	**17-3/8**	3/8			2.25/.187	0	1	
(3) for 50" cut, fits models XEG1182HAR, PP2050, PP2050D, XC1182HB									
95-018	532137380	**17-3/8**	5 pt. Star			2.25/.149	1/8	15/16	
(3) for 50" cut, fits models PP20H50J, PP20H50JA, PP22H50K, PP22H50KA									
95-050		17-3/8	5 pt. Star			2.25/.187	0	1	
(3) for 50" cut, high-lift									
95-609		17-3/8	5 pt. Star			2.50/.187	0	3/4	G3
Gator G3									
595-609		17-3/8	5 pt. Star			3.00/.164	0	1	G5
Gator G5						High-Lift Xtended Fusion®			

B

Blades - OEM Replacements

Poulan

	OREGON	OEM No.	Length	Center	Outer	C to C	W / T	Off	Lift	Prod. Code
(2) for 36" cut	**95-034**	532126338	**18-3/16**	3/8	3/8	10	2.50/.187	0	7/8	
(2) for 36" cut, model PP1136, star center hole	**95-036**	532127841	**18-3/16**	5 pt. Star			2.25/.134	1/8	1	
(2) for 36" cut, model PP1136, heavy-duty version of 95-036	**95-026**	532138496	18-3/16	5 pt. Star			2.25/.187	1/8	1	
Gator® G3™	**95-613**		18-3/16	5 pt. Star			2.50/.187	0	3/4	G3
Gator G5™	**595-613**		18-3/16	5 pt. Star			3.00/.164	0	1	High-Lift Xtended Fusion® G5
(3) for 54" cut, 541ZX, PB22VA54, PB26H54YT, PBGT26H54, PBLGT26H54	**195-072**	187254 532187256 539112053 574292401 575938401 777187256	**18-7/16**	5 pt. Star	5/16	3-15/16	2.75/.187	1/2	1-3/16	Xtended 100
(3) for 54" cut, mulching, 541ZX, PB22VA54, PB26H54YT, PBGT26H54, PBLGT26H54	**95-082**	187255 532187255 575938501 582923101	18-7/16	5 pt. Star			2.50/.187	5/16	13/16	
Gator G3	**95-605**		18-7/16	5 pt. Star			2.50/.187	1/2	3/4	G3
Gator G5	**595-605**		18-7/16	5 pt. Star			3.00/.164	1/2	1	High-Lift Xtended Fusion® G5
(2) for 38" cut, fits XEL1120	**95-031**	532121263 532143978	**19-1/4**	3/8			2.25/.187	0	1	
(2) for 38" cut, model PP125H38B	**195-033**	531307221 532127842 532138497	**19-1/4**	5 pt. Star	3/8	3-1/8	2.25/.134	1/8	1-1/16	Xtended 100

GROUP CONTINUES

B

Poulan

	OREGON	OEM No.	Length	Center	Outer	C to C	W / T	Off	Lift	Prod. Code
			GROUP CONTINUES							
(2) for 38" cut, model PP125H38B, heavy-duty version of 195-033	**95-038**		19-1/4	5 pt. Star			2.25/.187	1/8	1-1/16	
(2) for 38" cut, high-lift	**95-047**		19-1/4	5 pt. Star			2.25/.187	0	1	
(2) for 38" cut, mulcher	**195-003**	531307220 532134148 532193957 53234148 539110324 581116301	19-1/4	5 pt. Star	5/16	3-1/8	2.25/.134	1/8	7/8	Xtended — 100
(2) for 38" cut, mulcher	**95-099**		19-1/4	5 pt. Star			2.25/.149	1/8	1	
Gator® G3™	**95-601**		19-1/4	5 pt. Star			2.50/.187	0	3/4	G3
Gator G5™	**595-601**		19-1/4	5 pt. Star			3.00/.164	0	1	High-Lift Xtended Fusion® — G5
20" cut, walk-behind	**95-024**	532850972	**20**	5/8	3/8	1-7/8	2.50/.149	9/16	7/8	
20" cut, walk-behind, mulching	**95-051**	532145106	20	5/8	3/8	1-7/8	2.25/.134	7/16	11/16	
20" cut, walk-behind, mulching	**95-044**	204340218 531307212 532752233 PP22055	20	5/8	3/8	1-7/8	2.00/.134	5/16	13/16	
Gator G5	**595-024**		20	5/8	3/8	1-7/8	3.00/.134	5/8	1	High-Lift Xtended Fusion® — G5
(2) for 42" cut	**195-032**	531307224 532138498 532138971 PP24004	**21**	5 pt. Star	5/16			1/8	1-1/16	Xtended — 100
(2) for 42" cut, heavy-duty version of 195-032	**195-039**		21	5 pt. Star	5/16	3-1/8	2.25/.187	1/8	1-1/18	Xtended — 100
			GROUP CONTINUES							

Blades - OEM Replacements

Poulan

GROUP CONTINUES

	OREGON	OEM No.	Length	Center	Outer	C to C	W / T	Off	Lift	Prod. Code
(2) for 42" cut, sand	**195-048**		21	5 pt. Star	5/16	3-1/8	2.25/.187	0	3/4	Xtended — 100
(2) for 42" cut, mulcher	**195-005**	531307223 532134149	21	5 pt. Star			2.25/.134	1/8	7/8	Xtended — 100
(2) for 42" cut, heavy-duty version of 195-005	**195-019**	532139775	21	5 pt. Star			2.25/.149	1/8	15/16	Xtended — 100
(2) for 42" cut	**95-086**		21	5 pt. Star			2.50/.203	0	1.000	
Gator® G3™	**96-900**	521981601	21	5 pt. Star			2.50/.187	0	3/4	G3
Gator G5™	**596-900**		21	5 pt. Star			3.00/.164	0	1	High-Lift Xtended Fusion® — G5
21" cut, walk-behind	**95-071**	531307235	**21**	5/8	3/8	1-7/8	2.75/.134	1/2	1-1/8	
21" cut, walk-behind, mulching	**195-067**	531307213 532189028 539111878 PP23020	21	5/8	3/8	1-7/8	2.25/.134	9/16	1-1/16	Xtended — 100
21" cut walk-behind	**95-057**	532175064 532406712 581694101	21	5/8	3/8	1-7/8	2.75/.134	1/2	1-9/16	
Gator G3	**95-621**	580258101 580258102	21	5/8	3/8	1-7/8	2.50/.187	1/2	3/4	G3
Gator G5	**595-621**		21	5/8	3/8	1-7/8	3.00/.149	1/2	1	High-Lift Xtended Fusion® — G5
22" cut, walk-behind	**95-023**	532406707 532406713 532850973 56401 69334 8021	**21-3/4**	5/8	3/8	1-7/8	2.50/.149	9/16	7/8	
22" cut, walk-behind, mulching	**95-042**		21-3/4	5/8	3/8	1-7/8	2.50/.149	7/16	15/16	

GROUP CONTINUES

Poulan

	OREGON	OEM No.	Length	Center	Outer	C to C	W / T	Off	Lift	Prod. Code
22" cut, walk-behind, mulching	**195-021**	141114 531301252 531307214 531307236 531307237 532134768 532141114 532152202 575157101	21-3/4	5/8	3/8	1-7/8	2.25/.134	1/2	15/16	Xtended — 100
22" cut, walk-behind, mulching	**95-073**	532192682 582931401 917532406707	21-3/4	5/8	3/8	1-7/8	2.25/.134	9/16	1-3/16	
Gator® G3™	**95-602**		21-3/4	5/8	3/8	1-7/8	2.50/.187	1/2	3/4	G3
Gator G5™	**595-602**		21-3/4	5/8	3/8	1-7/8	3.00/.149	1/2	1	High-Lift Xtended Fusion® — G5
22" Walk behind	**95-076**	532420463	**21-15/16**	5 pt. Star			2.25/.134	9/16	13/16	
Gator G3	**95-615**	580244001 585587701	21-15/16	5 pt. Star			2.25/.134	9/16	3/4	G3
(2) for 46" cut, high-lift, PB185A46LT, PB18VA46, PB19546LT, PB20A46YT, PB22H46YT, PB23H46YT, 461ZX	**195-070**	532405380 575937901 777405380	**22-7/8**	5 pt. Star	5/16	3-15/16	2.75/.164	5/16	1-1/8	Xtended — 100
(2) for 46" cut, heavy-duty	**95-370**		22-7/8	5 pt. Star			2.50/.203	5/16	1-1/4	Xtended
(2) for 46" cut, mulching, PB19546LT	**95-074**	532403107	22-7/8	5 pt. Star			2.25/.149	1/8	15/16	Xtended
Gator G3	**96-370**		22-7/8	5 pt. Star			2.75/.187	1/4	3/4	Xtended — G3
Gator G5	**596-370**		22-7/8	5 pt. Star			3.00/.187	5/16	1	High-Lift Xtended Fusion® — G5
Gator® G5™	**595-807**	532419273 532419274 582928101 777419274	**29-5/8**	5 pt. Star			3.00/.149	5/16	1	High-Lift Xtended Fusion® — G5

GROUP CONTINUES

Blades - OEM Replacements

Progressive Turf

	OREGON	OEM No.	Length	Center	Outer	C to C	W / T	Off	Lift	Prod. Code
	91-594 NEW	526615	**5-1/4**	3/4			2.50/.187	1/2	5/16	
	94-124 NEW	526601	5-1/4	3/4			2.50/.187	1/2	5/8	
	94-121 NEW	522360	**23**	1	9/16	6-1/2	2.50/.312	11/16	3/4	
(3) for 65" decks, fits SDR-65, high-lift										
	94-122 NEW	522364	**24**	1	9/16	6-1/2	2.50/.312	11/16	3/4	
(4) for 90" deck, fits SDR-90, high-lift										
	91-593 NEW	522372	**27**	1	9/16	6-1/2	2.50/.312	3/4	1-3/8	
	94-123 NEW	522376	**32**	1	9/16	10	2.50/.312	13/16	3/4	

RedHawk

	99-127	148-005	**16-1/4**	5/8			2.50/.203	0	1-1/16	
(3) for 48" cut, 48KO180B/48KO180H										
	91-180		16-1/4	5/8			2.50/.187	0	1	
(3) for 48" cut										
	91-183		16-1/4	5/8			2.50/.250	0	1	
(3) for 48" cut										
	91-313		16-1/4	5/8			2.50/.203	0	1	
(3) for 48" cut										
	91-368		16-1/4	5/8			2.50/.203	0	1	
							Xtended			
(3) for 48" cut, mulching										
	96-310		16-1/4	5/8			2.50/.203	0	3/4	G3
Gator G3™										

GROUP CONTINUES

	OREGON	OEM No.	Length	Center	Outer	C to C	W / T	Off	Lift	Prod. Code
RedHawk			GROUP CONTINUES							
Gator G5	**596-310**		16-1/4	5/8			3.00/.203	0	1	G5
							High-Lift Xtended Fusion®			
Gator G6®	**396-716**		16-1/4	5/8			3.00/.250	0	1	G6
							Heavy-Duty High-Lift Xtended Fusion®			
Scag										
(3) for 36" cut, Z-Cat	**91-636**	482959	**12-3/16**	5/8			2.50/.203	0	1	
							Xtended			
Gator G3	**96-661**		12-3/16	5/8			2.50/.203	0	1	G3
(2) for 32" cut, (3) for 48" cut	**91-620**		**16-1/2**	5/8			2.50/.203	0	1	
							Xtended			
(2) for 32" cut, (3) for 48" cut, high-lift	**91-621**	48110 481706 481710 48184 482461 482877	16-1/2	5/8			3.00/.203	0	1-1/2	
(2) for 32" cut, (3) for 48" cut, Freedin Z, Tiger Cat, Tiger Cub, Wildcat	**92-145**		16-1/2	5/8			2.50/.203	0	1	
(3) for 48" cut, sand blade, for use only on Scag Velocity Plus decks	**99-500**		16-1/2	5/8			3.00/.203	0	1-3/16	
							Xtended			
Gator® G3™	**96-308**		16-1/2	5/8			2.50/.203	0	1	G3
Gator G5™	**596-308**		16-1/2	5/8			3.00/.203	0	1	G5
							High-Lift Xtended Fusion®			
Gator G6®	**396-735**		16-1/2	5/8			3.00/.250	0	1	G6
							Heavy-Duty High-Lift Xtended Fusion®			

B

Blades - OEM Replacements

Scag

	OREGON	OEM No.	Length	Center	Outer	C to C	W / T	Off	Lift	Prod. Code
(3) for 52" cut, (2) for 36" cut, fits Tiger Cub, Wildcat, Turf Tiger and Freedom Z52" deck	**91-622**	48108 481707 482462	**18**	5/8			2.50/.203	0	1	
							Xtended			
(3) for 52" cut, (2) for 36" cut	**91-637**	482878	18	5/8			2.50/.203	0	1	
(2) for 36" cut, (3) for 52" cut, high-lift	**91-623**	481711 48185	18	5/8			3.00/.203	0	1-1/2	
							Xtended			
(3) for 52" cut, sand blade, for use only on Scag Velocity Plus decks	**99-501**		18	5/8			3.00/.203	0	1-3/16	
							Xtended			
Gator G3	**96-344**	482961	18	5/8			2.50/.203	0	3/4	G3
Gator® G5™	**596-344**		18	5/8			3.00/.203	0	1	
							High-Lift Xtended Fusion®			G5
Gator G6®	**396-726**		18	5/8			3.00/.250	0	1	
							Heavy-Duty High-Lift Xtended Fusion®			G6
(3) for 61" cut, all models	**91-626**	48111 481708	**21**	5/8			2.50/.203	0	1	
(3) for 61" cut, all models	**91-638**	482787 482879 482881 48304	21	5/8			2.50/.203	0	1	
(3) for 61" cut, high-lift version of 91-626	**91-628**	481712	21	5/8			3.00/.203	0	1-1/2	
							Xtended			
(3) for 61" cut, mulching	**91-596**		21	5/8			2.50/.203	0	1	
(3) for 61" cut, sand blade, for use only on Scag Velocity Plus decks	**99-502**		21	5/8			3.00/.203	0	1-3/16	

GROUP CONTINUES

Scag

	OREGON	OEM No.	Length	Center	Outer	C to C	W / T	Off	Lift	Prod. Code
Gator G3™	96-347		21	5/8			2.50/.203	0	3/4	G3
Gator G5	596-347		21	5/8			3.00/.203	0	1	High-Lift Xtended Fusion® G5
Gator G6	396-727		21	5/8			3.00/.250	0	1	Heavy-Duty High-Lift Xtended Fusion® G6

GROUP CONTINUES

(3) for 72" cut	91-627	48112 481709 482788 482882	24-1/2	5/8			2.50/.203	0	1	Xtended
(3) for 72" cut, high-lift	92-035		24-1/2	5/8			3.00/.250	0	1-3/16	
Gator® G3™	96-341		24-1/2	5/8			2.50/.203	0	3/4	G3
Gator G5™	596-341		24-1/2	5/8			3.00/.203	0	1	High-Lift Xtended Fusion® G5
Gator G6®	396-764		24-1/2	5/8			3.00/.250	0	1	Heavy-Duty High-Lift Xtended Fusion® G6

Scotts

(3) for 46" cut, high-lift, models made by Murray	97-123		15-3/4	13/16			2.25/.134	5/8	1	
(3) for 46" cut, heavy-duty version of 97-123, models made by Murray	97-012		15-3/4	13/16			2.25/.187	5/8	1	
(3) for 46" cut, mulcher, models made by Murray	97-017	56631E701	15-3/4	13/16			2.25/.134	11/16	1-1/8	
Gator G3	97-606		15-3/4	13/16			2.50/.187	5/8	3/4	G3
Gator G5	597-606		15-3/4	13/16			3.00/.164	5/8	1	High-Lift Xtended Fusion® G5

B

Blades - OEM Replacements

Scotts

	OREGON	OEM No.	Length	Center	Outer	C to C	W / T	Off	Lift	Prod. Code
(3) for 46" cut, lawn tractor, models made by John Deere	**91-448**	M127466	**16**	11/16			2.50/.203	0	15/16	
(3) for 46" cut, lawn tractor, models made by John Deere	**91-389**		16	11/16			2.00/.203	0	13/16	
Gator G3	**96-394**		16	11/16			2.50/.203	0	1	G3
Gator G6	**396-725**		16	11/16			3.00/.250	0	1	Heavy-Duty High-Lift Xtended Fusion® G6
(3) for 48" cut, Yard Tractor, high-lift for bagging	**91-447**	M135589	**16-9/16**	13/16			2.50/.203	7/16	1-1/16	
Gator® G3™	**96-618**		16-9/16	13/16			2.50/.203	7/16	1	G3
(3) for 48" & 50" cut, LT rail frame models, used on Scotts mower, models made by Murray	**97-018**	774048 94692	**17-11/16**	13/16			2.25/.149	3/8	1-1/8	
(3) for 54" cut, style models made by John Deere	**91-380**	M115496	**18-11/16**	13/16			2.50/.203	3/8	1-1/8	
(3) for 54" cut, style models made by John Deere	**91-404**		18-11/16	13/16			2.50/.203	5/16	7/8	
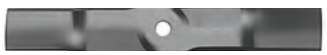 (3) for 54" cut, style models made by John Deere	**91-384**		18-11/16	13/16			2.50/.203	3/8	3/4	
Gator G3	**96-306**		18-11/16	13/16			2.50/.203	3/8	1	G3
Gator G5™	**596-306**		18-11/16	13/16			3.00/.203	3/8	1	High-Lift Xtended Fusion® G5
Gator G6®	**396-706**		18-11/16	13/16			3.00/.250	3/8	1	Heavy-Duty High-Lift Xtended Fusion® G6

Scotts

(2) for 42" cut, used on Scotts mower models made by Murray

OREGON	OEM No.	Length	Center	Outer	C to C	W / T	Off	Lift	Prod. Code
197-019	495100 95100	**21-1/4**	7/8	3/8	3-9/16	2.25/.134	3/8	1	Xtended — 100

(2) for 42" cut, mulcher, yard tractor, models made by John Deere

91-449	M139802	**21-7/16**	11/16			2.50/.164	7/16	1-1/16	

Gator G3

96-340		21-7/16	11/16			2.50/.203	7/16	1	G3

Simplicity

(3) for 42" cut, 600, 1800, 5000, 6000 series

92-146	1656147 1656147A 1656147ASM 1656147SM 71656147	**15-5/16**	3/4	3/8	2-9/16	2.00/.187	0	1	

(1) 91-615 & (2) 91-616 for 54" cut

91-615	1687016 1687016SM 1722090	**16**	1	3/8	2-9/16	2.50/.203	0	1-1/4	

(3) for 46" cut, 2620, 2724H, 2726H, AC23420, Broadmoor, Conquest, MF130, MF2523, Prestige, Regent, Regent EX, ZT3000, ZT27460

99-132	1737228 1737228A 1737228AYP 1737228BM 1737228BMA 1737228BZ	**16-1/8**	3/4 1737228BZYP 1737228SM 1737228YP			2.50/.203	0	1-1/16	

Gator® G5™

599-132	1739889 1739889A 1739889AYP 1739889BM 1739889BMA 179889BZ	16-1/8	3/4			3.00/.203	0	1	High-Lift Xtended Fusion® — G5

(1) 91-723 & (1) 91-701 for 38" cut, 500 series, 1600 series, 2500-2600 series, Broadmoor, GTG, GTH, Landlord, LTG, LTH, Regent, ZT

91-723	1704856 1704856A 1704856ASM 1704856BMA 1704856BZ 1704856SM 71704856	**16-1/8**	3/4	3/8	2-9/16	2.00/.203	0	1-1/8	

GROUP CONTINUES

B

Blades - OEM Replacements

Simplicity

GROUP CONTINUES

OREGON	OEM No.	Length	Center	Outer	C to C	W / T	Off	Lift	Prod. Code
91-705	17027774 17027774SM 1704100 1704100A 1704100ASM 1704100BMA 1704100BZ 1704100SM 1716696 1716696A 1716696ASM 1716696SM	16-1/8	3/4	3/8	2-9/16	2.00/.203	0	1-1/16	
(3) for 44" cut, 1600 & 1700 series, 2616H, Broadmoor, Conquest, GTG, GTH, Landlord, LTH, Prestige, Regent	1727774 1727774A 1727774ASM 1727774BMA 1727774BZ 1727774SM 71704100 71704100A								
90-685		16-1/8	3/4	3/8	2-9/16	2.50/.203	0	3/4	G3
Gator® G3™									
590-685		16-1/8	3/4	3/8	2-9/16	3.00/.187	0	1	
Gator G5™						High-Lift Xtended Fusion®			G5
91-313	5101986S 5101986SYP	**16-1/4**	5/8			2.50/.203	0	1	
(3) for 48" cut									
91-183		16-1/4	5/8			2.50/.250	0	1	
(3) for 48" cut									
91-180		16-1/4	5/8			2.50/.187	0	1	
(3) for 48" cut									
99-127		16-1/4	5/8			2.50/.203	0	1-1/16	
(3) for 48" cut									
91-368		16-1/4	5/8			2.50/.203	0	1	
(3) for 48" cut, mulching						Xtended			
96-310		16-1/4	5/8			2.50/.203	0	3/4	
Gator G3									G3
596-310		16-1/4	5/8			3.00/.203	0	1	
Gator G5						High-Lift Xtended Fusion®			G5
396-716		16-1/4	5/8			3.00/.250	0	1	
Gator G6®						Heavy-Duty High-Lift Xtended Fusion®			G6
391-614	1759055YP	**16-1/2**	3/4			3.00/.250	0	1	
Gator G6 (3) for 48" cut						Heavy-Duty High-Lift Xtended Fusion®			G6

B

Simplicity

	OREGON	OEM No.	Length	Center	Outer	C to C	W / T	Off	Lift	Prod. Code
(3) for 48" cut	**91-606**	1757303YP	**16-1/2**	13/16			2.25/.149	0	5/8	
Gator G6	**391-606**		16-1/2	13/16			3.00/.250	0	1	Heavy-Duty High-Lift Xtended Fusion® G6
(3) for 48" cut, left-hand cut, large frame garden tractors 1987 & later	**91-703**	1659916A 1659916ASM 1659916BMA 1659916BZ 1659916SM 1679916 1679916ASM 1679916BZYP 71679916	**16-3/4**	1			2.50/.203	9/16	1-1/8	
(3) for 48" cut, 5200, 6100, 6200, 6500, FC & GT series	**91-715**	1656146 1656146ASM 1656149A	**17**	3/4	3/8	2-9/16	2.00/.187	0	1	
(3) for 52" cut	**91-256**	1756152AYP 1756152SYP	**18**	5/8			2.50/.203	0	1	Xtended
(2) for 36", (3) for 52" cut, high-lift	**91-623**	A48185	18	5/8			3.00/.203	0	1-1/2	Xtended
(3) for 52" cut, low-lift	**91-235**		18	5/8			2.50/.250	0	7/8	Xtended
(3) for 52" cut, mulching	**91-335**	5103304SYP	18	5/8			2.50/.203	0	1	Xtended
(3) for 52" cut	**91-181**		18	5/8			2.50/.187	0	1	Xtended
(3) for 52" cut	**91-312**	5101756S 5101756SYP	18	5/8			2.50/.203	0	1	Xtended
(3) for 52" cut	**91-622**		18	5/8			2.50/.203	0	1	Xtended
(3) for 52" cut	**91-637**		18	5/8			2.50/.203	0	1	

GROUP CONTINUES

GROUP CONTINUES

Blades - OEM Replacements

Simplicity

	OREGON	OEM No.	Length	Center	Outer	C to C	W / T	Off	Lift	Prod. Code
			GROUP CONTINUES							
(3) for 52" cut	**94-053**		18	5/8			2.50/.250	0	1	
(3) for 52" cut	**91-184**		18	5/8			2.50/.250	0	1	Xtended
Gator® G3™	**96-344**		18	5/8			2.50/.203	0	3/4	G3
Gator G5™	**596-344**		18	5/8			3.00/.203	0	1	High-Lift Xtended Fusion® G5
Gator G6®	**396-726**		18	5/8			3.00/.250	0	1	Heavy-Duty High-Lift Xtended Fusion® G6
(3) for 50" cut, fits large frame tractors	**91-706**	1708229 1708229A 1708229ASM 1708229BMA 1708229BZ 1708229SM 1716697 1716697A 1716697ASM 1716697BMA 1716697BZ	**18-1/8**	3/4	3/8	2-9/16	2.00/.203	0	1	
		1716697SM 1726453 1726453A 1726453ASM 1726453BMA 1726453BZ 1726453BZYP 1726453SM								
Gator G3	**90-698**	1721086 1721086A 1721086ASM	18-1/8	3/4	3/8	2-9/16	2.50/.203	0	3/4	G3
Gator G5	**590-698**		18-1/8	3/4	3/8	2-9-16	3.00/.187	0	1	High-Lift Xtended Fusion® G5
Gator G6	**390-698**		18-1/8	3/4	3/8	2-9/16	3.00/.250	0	1	Heavy-Duty High-Lift Xtended Fusion® G6
(3) for 52" cut, 2620, 2724H, 2726H, Broadmoor, Champion 2652, Champion 2752, Conquest, MF2523, MF355X, MRZT26520, Prestige, Regent, Regent EX, ZT2752, ZT27460	**99-133**	1737252 1737252A 1737252AYP 1737252BM 1737252BMA 1737252BZ 1737252BZYP 1737252SM 1737252YP	**18-1/2**	3/4			2.50/.203	0	1-1/8	
		GROUP CONTINUES								

B

Simplicity

	OREGON	OEM No.	Length	Center	Outer	C to C	W / T	Off	Lift	Prod. Code
Gator G3	**96-133**	11913 11914 11949 539118672 539118673	18-1/2	3/4			2.50/.203	0	3/4	G3
Gator G5	**599-133**		18-1/2	3/4			3.00/.203	0	1	G5
							High-Lift Xtended Fusion®			
(2) for 36" cut, (1) 91-713 & (1) 91-714 for 36" cut bagger, 1036 Sprint, 3110, 4108, 4111, 4208, 4211, 5116, 6008, 6108, 608LT, 608LTD, 611LT, 616SPL, 808GT	**91-713**	1653975 1656043 1657589 1657589A 1657589ASM 1657589SM 71657589	**18-1/2**	3/4	3/8	2-9/16	2.00/.187	0	3/4	
(2) for 36" cut, (High-lift bagging version of 91-713), 1036 Sprint, 3110, 4108, 4111, 4208, 4211, 5116, 6008, 6108, 608LT, 608LTD, 611LT, 616SPL, 808GT	**91-714**	1671593 1671593A 1671593ASM 1671593SM 71671593	18-1/2	3/4	3/8	2-9/16	2.50/.164	0	1-5/16	
(1) 91-615 & (2) 91-616 for 54" cut	**91-616**	1687017 1687017SM 1736043 1736043A 1736043AYP 1736043BM 1736043BMA 1736043BMYP 1736043BZ	**20-9/16**	1	3/8	2-9/16	2.50/.203	0	1-1/4	
Gator G3	**96-398**	1725921 1725921A 1725921ASM 1725921SM	20-9/16	1	3/8	2-9/16	2.50/.203	0	1	G3
(3) for 61" cut	**91-626**	5022808ASM	**21**	5/8			2.50/.203	0	1	
(3) for 61" cut	**91-209**		21	5/8			2.50/.250	0	1	
							Xtended			
(3) for 61" cut	**91-628**		21	5/8			3.00/.203	0	1-1/2	
							Xtended			
(3) for 61" cut	**91-308**	5104045SYP	21	5/8			2.50/.203	0	1	

GROUP CONTINUES

Blades - OEM Replacements

Simplicity

	OREGON	OEM No.	Length	Center	Outer	C to C	W / T	Off	Lift	Prod. Code
			GROUP CONTINUES							
(3) for 61" cut	**93-008**		21	5/8	1/4	1-5/8	2.50/.250	0	1-3/16	Xtended
(3) for 61" cut	**95-078**		21	5/8			2.50/.250	0	1	
(3) for 61" cut, mulching	**91-596**		21	5/8			2.50/.203	0	1	
Gator® G3™	**96-347**		21	5/8			2.50/.203	0	3/4	G3
Gator G5™	**596-347**		21	5/8			3.00/.203	0	1	High-Lift Xtended Fusion® G5
Gator G6®	**396-727**		21	5/8			3.00/.250	0	1	Heavy-Duty High-Lift Xtended Fusion® G6
(2) for 42" cut	**91-610**	1731898 1731898A 1731898ASM 1731898BMA 1731898BZ 1731898BZYP	**21-3/16**	1			2.25/.149	7/16	1	
Gator G6	**391-610**		21-3/16	1			3.00/.250	7/16	1	Heavy-Duty High-Lift Xtended Fusion® G6
(2) for 42" cut	**91-605**	1737816 1737816BM 1737816BMA 1737816BMYP 1737816BZ 1737816SM 1737816YP	**21-3/16**	13/16			2.25/.149	7/16	13/16	
Gator G6	**391-605**		21-3/16	13/16			3.00/.250	7/16	1	Heavy-Duty High-Lift Xtended Fusion® G6
(2) for 42" cut	**91-607**	1758878BMYP	**21-5/16**	13/16			2.25/.149	0	5/8	
Gator G6	**391-607**		21-5/16	13/16			3.00/.250	0	1	Heavy-Duty High-Lift Xtended Fusion® G6

B

Simplicity

	OREGON	OEM No.	Length	Center	Outer	C to C	W / T	Off	Lift	Prod. Code
	99-134	7100851A 7100851AYP 7100851BM 7100851BMYP 7100851BZ	**21-5/8**	3/8	3/8	1-7/8	2.25/.134	1/4	1-1/8	
 (1) 91-701 & (1) 91-723 for 38" cut, LT8 series	**91-701**	1704101 1704101A 1704101ASM 1704101BM 1704101BMA 1704101BZ 1704101SM 1716695 1716695A 1716695ASM 1716695SM 71704101	**22-1/4**	3/4	3/8	2-9/16	2.00/.203	0	1-1/16	
 Gator® G3™	**96-654**		22-1/4	3/4	3/8	2-9/16	2.50/.203	0	3/4	G3
 (3) for 72" cut	**91-609**		**25**	5/8			2.50/.250	0	1	
 Gator G6®	**396-731**	5102227S 5102227SYP	25	5/8			3.00/.250	0	1	Heavy-Duty High-Lift Xtended Fusion® G6

Snapper

 (3) for 42" cut, low-lift, ZTR	**91-557**	7079215 7079221 7079221BM 7079221YP 79215 79221	**15**	1/2			2.50/.250	5/16	3/4	
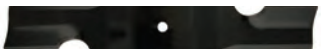 (3) for 42" cut, high-lift, ZTR	**91-536**		15	1/2			2.50/.250	5/16	1	
 (3) for 42" cut, high-lift, ZTR	**92-150**		15	1/2			2.50/.203	5/16	1-1/4	
 Gator G3	**96-343**		15	1/2			2.50/.203	5/16	1	Xtended G3
 Gator G6	**396-713**		15	1/2			3.00/.250	5/16	1	Heavy-Duty High-Lift Xtended Fusion® G6

B

Blades - OEM Replacements

Snapper

	OREGON	OEM No.	Length	Center	Outer	C to C	W / T	Off	Lift	Prod. Code
			GROUP CONTINUES							
	92-146	1656147A	**15-5/16**	3/4	3/8	2-9/16	2.00/.187	0	1	
(1) 91-615 & (2) 91-616 for 54" cut	**91-615**	1687016 1687016SM 1687398 1722090 1722090A 1736044 1736044A 1736044AYP	**16**	1	3/8	2-9/16	2.50/.203	0	1-1/4	
(3) for 46" & 52" cut, 150, 200Z, 285Z, 300Z, 355Z, LT125, LT200, NXT200, RZT, SPX, ZT, ZTR	**99-132**	1737228 1737228AYP 1737228BZYP	**16-1/8**	3/4			2.50/.203	0	1-1/16	
Gator® G5™	**599-132**	1739889 1739889A 1739889AYP 1739889BM 1739889BMA 179889BZ	16-1/8	3/4			3.00/.203	0	1	High-Lift Xtended Fusion® G5
	91-723	1704856 1704856A 1704856ASM 1704856BMA 1704856BZ	**16-1/8**	3/4	3/8	2-9/16	2.00/.203	0	1-1/8	
(3) for 44" cut, 355Z, 360Z, 400Z, ACS, Fastcut, LT200, LT300, RMO, RZT, YT400	**91-705**	17027774 1704100 1704100A 1704100BMA 1704100BZ 1716696 1716696A 1716696ASM	16-1/8 1716696SM 1727774 1727774A 1727774BMA 1727774BZ	3/4	3/8	2-9/16	2.00/.203	0	1-1/16	
Gator G3™	**90-685**		16-1/8	3/4	3/8	2-9/16	2.50/.203	0	3/4	G3
Gator G5	**590-685**		16-1/8	3/4	3/8	2-9/16	3.00/.187	0	1	High-Lift Xtended Fusion® G5
(3) for 48" cut, series 2 decks	**91-180**	7076675 76675	**16-1/4**	5/8			2.50/.187	0	1	
(3) for 48" cut, heavy-duty	**91-183**		16-1/4	5/8			2.50/.250	0	1	

GROUP CONTINUES

Snapper

	OREGON	OEM No.	Length	Center	Outer	C to C	W / T	Off	Lift	Prod. Code
(3) for 48" cut	**91-313**	5101986 5101986BM 5101986BMYP 5101986S 5101986SYP 5101986YP	16-1/4	5/8			2.50/.203	0	1	
(2) for 32" cut, (3) for 48" cut, commercial-series 2 decks	**99-127**	7014036BMI 7014036BMYP 7014036YP 7017036BM 7017036BMI 7077377	16-1/4	5/8			2.50/.203	0	1-1/16	
(3) for 48" cut	**91-368**	5103303S 5103303SX2 5103303SYP	16-1/4	5/8			2.50/.203	0	1	Xtended
Gator® G3™	**96-310**		16-1/4	5/8			2.50/.203	0	3/4	G3
Gator G5™	**596-310**		16-1/4	5/8			3.00/.203	0	1	High-Lift Xtended Fusion® G5
Gator G6®	**396-716**		16-1/4	5/8			3.00/.250	0	1	Heavy-Duty High-Lift Xtended Fusion® G6
(3) for 48" cut	**91-606**	1757303 1757303BM 1757303YP	**16-1/2**	13/16			2.25/.149	0	5/8	
Gator G6	**391-606**		16-1/2	13/16			3.00/.250	0	1	Heavy-Duty High-Lift Xtended Fusion® G6
(3) for 48" cut, commercial, model PMA480, Pro Series 0, Pro 7 Series 0,1,2,4	**99-126**	17043 7017043 7017043YP 7075771 7075771BMA 7075771BZ 7075771BZYP	**16-1/2**	5/8			2.50/.203	0	1-1/16	
(3) for 48" cut, high-lift, commercial, model PMA480, Pro Series 0, Pro 7 Series 0,1,2,4	**91-621**		16-1/2	5/8			3.00/.203	0	1-1/2	
(3) for 48" cut, low-lift, commercial, model PMA480, Pro Series 0, Pro 7 Series 0,1,2,4	**92-207**		16-1/2	5/8			2.50/.203	0	13/16	Xtended

GROUP CONTINUES

B

Blades - OEM Replacements

Snapper

	OREGON	OEM No.	Length	Center	Outer	C to C	W / T	Off	Lift	Prod. Code
			GROUP CONTINUES							
(3) for 48" cut, mulching, commercial, model PMA480, Pro Series 0, Pro 7 Series 0,1,2,4	**92-737**		16-1/2	5/8			2.50/.203	0	1-1/16	Xtended
(3) for 48" cut, commercial, model PMA480, Pro Series 0, Pro 7 Series 0,1,2,4	**91-620**		16-1/2	5/8			2.50/.203	0	1	Xtended
(3) for 48" cut, commercial, model PMA480, Pro Series 0, Pro 7 Series 0,1,2,4	**92-036**		16-1/2	5/8			2.50/.250	0	1	
(3) for 48" cut, commercial, model PMA480, Pro Series 0, Pro 7 Series 0,1,2,4	**92-145**		16-1/2	5/8			2.50/.203	0	1	
(3) for 48" cut, commercial, model PMA480, Pro Series 0, Pro 7 Series 0,1,2,4	**92-743**		16-1/2	5/8			2.50/.203	0	1	Xtended
Gator® G3™	**96-308**		16-1/2	5/8			2.50/.203	0	1	G3
Gator G5™	**596-308**		16-1/2	5/8			3.00/.203	0	1	High-Lift Xtended Fusion® G5
Gator G6®	**396-735**		16-1/2	5/8			3.00/.250	0	1	Heavy-Duty High-Lift Xtended Fusion® G6
Gator G6 (3) for 48" cut, 150, 360Z	**391-614**	175303 175303YP 1759055 1759055YP	**16-1/2**	3/4			3.00/.250	0	1	Heavy-Duty High-Lift Xtended Fusion® G6
(3) for 48" cut, high-lift, ZTR	**91-123**	7079388 79388	**16-15/16**	1/2			2.50/.203	5/16	1-5/16	
(3) for 48" cut, low-lift, ZTR	**91-126**	7079369 7079369BM 7079369YP 79369	16-15/16	1/2			2.50/.203	5/16	3/4	
Gator G3	**99-617**		16-15/16	1/2			2.50/.203	5/16	3/4	G3

B

Snapper

	OREGON	OEM No.	Length	Center	Outer	C to C	W / T	Off	Lift	Prod. Code
(2) for 36" cut, (3) for 52" cut, Series 2 decks, Pro Series 0, Pro 7 series 0,1,2,4	**91-181**	17037 7017037 7075751 7075751BMA 7075751BZ 7075751BZYP 7076450 7077344 76450 77344	**18**	5/8			2.50/.187	0	1	Xtended
(2) for 36" cut, (3) for 52" cut, high-lift, Series 2 decks, Pro Series 0, Pro 7 series 0,1,2,4	**91-623**		18	5/8			3.00/.203	0	1-1/2	Xtended
(2) for 36" cut, (3) for 52" cut, low-lift, Series 2 decks, Pro Series 0, Pro 7 series 0,1,2,4	**91-235**		18	5/8			2.50/.250	0	7/8	Xtended
(2) for 36" cut, (3) for 52" cut, mulching, Series 2 decks, Pro Series 0, Pro 7 series 0,1,2,4	**91-335**	5103304S 5103304SYP 5103304X2	18	5/8			2.50/.203	0	1	Xtended
(2) for 36" cut, (3) for 52" cut, mulching, Series 2 decks, Pro Series 0, Pro 7 series 0,1,2,4	**91-256**	1756152SYP	18	5/8			2.50/.203	0	1	Xtended
(2) for 36" cut, (3) for 52" cut, Series 2 decks, Pro Series 0, Pro 7 series 0,1,2,4	**91-312**	5101756S 5101756SYP 5101756X2	18	5/8			2.50/.203	0	1	Xtended
(2) for 36" cut, (3) for 52" cut, Series 2 decks, Pro Series 0, Pro 7 series 0,1,2,4	**91-622**		18	5/8			2.50/.203	0	1	Xtended
(2) for 36" cut, (3) for 52" cut, Series 2 decks, Pro Series 0, Pro 7 series 0,1,2,4	**91-637**		18	5/8			2.50/.203	0	1	
(2) for 36" cut, (3) for 52" cut, Series 2 decks, Pro Series 0, Pro 7 series 0,1,2,4	**94-053**		18	5/8			2.50/.250	0	1	
(2) for 36" cut, (3) for 52" cut, heavy-duty, Series 2 decks, Pro Series 0, Pro 7 series 0,1,2,4	**91-184**		18	5/8			2.50/.250	0	1	Xtended

GROUP CONTINUES

Blades - OEM Replacements

Snapper

	OREGON	OEM No.	Length	Center	Outer	C to C	W / T	Off	Lift	Prod. Code
			GROUP CONTINUES							
Gator® G3™	**96-344**		18	5/8			2.50/.203	0	3/4	G3
Gator G5™	**596-344**		18	5/8			3.00/.203	0	1	High-Lift Xtended Fusion® G5
Gator G6®	**396-726**		18	5/8			3.00/.250	0	1	Heavy-Duty High-Lift Xtended Fusion® G6
(3) for 50" cut, 1695141, 1695418, 1695588, (CSC2650) (SC2450) (SC2650) (ZT2450) 150Z, (LT18500) (LT2250) LT200, (RZT22500BVE2 (7800011 & 7800153)) RZT, YT1850, YT2050, (YT2350) (YT23500 (2690752)) (YT2250 (1694627)) (YT22500 (2690269)) YT400	**91-706**	1708229 1708229A 1708229ASM 1708229BMA 1716697 1716697A 1716697ASM 1716697BMA 1716697BZ 1716697SM	**18-1/8**	3/4	3/8	2-9/16	2.00/.203	0	1	
										1726453 1726453A 1726453ASM 1726453BMA 1726453BZ 1726453BZP 1726453BZYP
Gator G3	**90-698**	1721086 1721086A 1721086ASM	18-1/8	3/4	3/8	2-9/16	2.50/.203	0	3/4	G3
Gator G5	**590-698**		18-1/8	3/4	3/8	2-9-16	3.00/.187	0	1	High-Lift Xtended Fusion® G5
Gator G6	**390-698**		18-1/8	3/4	3/8	2-9/16	3.00/.250	0	1	Heavy-Duty High-Lift Xtended Fusion® G6
(3) for 52" cut, 150, 150Z, 285Z, 300Z, 365Z, LT125, LT200, LT300, NXT200, RMO, RZT, SPX, YT400, ZT, ZTR	**99-133**	1737252 1737252A 1737252AYP 1737252BM 1737252BMA 1737252BZ 1737252BZYP 1737252YP	**18-1/2**	3/4			2.50/.203	0	1-1/8	
Gator G3	**96-133**	11913 11914 11949 539118672 539118673	18-1/2	3/4			2.50/.203	0	3/4	G3
Gator G5	**599-133**		18-1/2	3/4			3.00/.203	0	1	High-Lift Xtended Fusion® G5

B

Snapper

	OREGON	OEM No.	Length	Center	Outer	C to C	W / T	Off	Lift	Prod. Code
	91-713	1657589A	**18-1/2**	3/4	3/8	2-9/16	2.00/.187	0	3/4	
	91-714	1671593A	18-1/2	3/4	3/8	2-9/16	2.50/.164	0	1-5/16	
Gator G3	**99-614**	24466 42998 7024466 7042998 7042998BMA 7042998BZ 7042998BZYP	**19-7/16**	1			2.50/.203	3/16	3/4	G3
(1) 91-615 & (2) 91-616 for 54" cut	**91-616**	1687017 1687017SM 1736043 1736043A 1736043AYP 1736043BM	**20-9/16**	1	3/8	2-9/16	2.50/.203	0	1-1/4	
				1736043BMA 1736043BMYP 1736043BZ						
Gator G3	**96-398**	1725921 1725921A 1725921ASM 1725921AYP 1725921SM	20-9/16	1	3/8	2-9/16	2.50/.203	0	1	G3
21" cut, walk-behind, steel deck	**99-103**	17002 26691 7017002 7026691 7026691BZYP 702669BMA	**20-11/16**	3/8	3/8	2-3/4	2.75/.164	3/16	1	
				702669BZ 702669YP 7028524						
21" cut walk-behind, (2) for 41" cut tractor, punched for high-lift deflector 79-732	**99-107**	19795 7019795BMA 7019795BZ 7019795BZYP 7019795YP	20-11/16	3/8	3/8	2-3/4	2.75/.164	3/16	1	
21" cut, recycler	**99-121**	17168 7017086 7017168 7026407 7026407AYP 7041939	20-11/16	3/8	3/8	2-3/4	2.75/.164	3/16	1-1/4	
				7041939BMA 7041939BZ 7041939BZYP						
Gator G3	**96-620**		20-11/16	3/8	3/8	2-3/4	2.75/.164	3/16	3/4	G3

B

Blades - OEM Replacements

Snapper

	OREGON	OEM No.	Length	Center	Outer	C to C	W / T	Off	Lift	Prod. Code
	99-119	7100242 7100242A 7100242AYP 7100242BM 7100242BMA 7100242BZ 7100242BZYP 7100242ZZZZ	**20-11/16**	3/8			2.50/.149	3/8	1-1/8	
 21" cut walk-behind	**98-007**		**20-15/16**	13/16	3/8	2-1/2	2.25/.134	5/16	15/16	
 Gator® G3™	**98-102**	7026428 7026428BMA 7026428BZ 7026428BZYP	20-15/16	13/16	3/8	2-1/2	2.50/.134	5/16	3/4	G3
 (3) for 60" cut, high-lift, ZTR	**91-128**	7079371 7079371BM 7079371BMYP 7079371YP 79371	**20-15/16**	1/2			2.50/.203	5/16	1-1/4	
 (3) for 60" cut, low-lift, ZTR	**91-127**	7079222 79222	20-15/16	1/2			2.50/.203	5/16	3/4	
 Gator G3	**99-615**		20-15/16	1/2			2.50/.203	5/16	3/4	G3
 (3) for 61" cut	**91-308**	17081 5104045SYP 7017081 7073396 7073396YP 7075770	**21** 7075770BMA 7075770BZ 7075770YP 75770	5/8			2.50/.203	0	1	
 (3) for 61" cut, high-lift	**91-628**		21	5/8			3.00/.203 Xtended	0	1-1/2	
 (3) for 61" cut, mulching	**91-596**		21	5/8			2.50/.203	0	1	
 (3) for 61" cut	**91-209**		21	5/8			2.50/.250 Xtended	0	1	
 (3) for 61" cut	**91-626**		21	5/8			2.50/.203	0	1	
 (3) for 61" cut	**91-638**		21	5/8			2.50/.203	0	1	

GROUP CONTINUES

Snapper

OREGON	OEM No.	Length	Center	Outer	C to C	W / T	Off	Lift	Prod. Code
		GROUP CONTINUES							
93-008		21	5/8	1/4	1-5/8	2.50/.250	0	1-3/16	
						Xtended			
(3) for 61" cut									
95-078		21	5/8			2.50/.250	0	1	
(3) for 61" cut									
96-347	5103305S	21	5/8			2.50/.203	0	3/4	G3
Gator® G3™									
596-347		21	5/8			3.00/.203	0	1	
						High-Lift Xtended Fusion®			G5
Gator G5™									
396-727		21	5/8			3.00/.250	0	1	
						Heavy-Duty High-Lift Xtended Fusion®			G6
Gator G6®									
195-032	704429	**21**	5 pt. Star	5/16	3-1/8	2.25/.149	1/8	1-1/16	
						Xtended			100
(2) for 42" cut									
195-039		21	5 pt. Star	5/16	3-1/8	2.25/.187	1/8	1-1/18	
						Xtended			100
(2) for 42" cut, heavy-duty version of195-032									
195-048		21	5 pt. Star	5/16	3-1/8	2.25/.187	0	3/4	
						Xtended			100
(2) for 42" cut, sand									
195-005		21	5 pt. Star			2.25/.134	1/8	7/8	
						Xtended			100
(2) for 42" cut, mulching									
195-019		21	5 pt. Star			2.25/.149	1/8	15/16	
						Xtended			100
(2) for 42" cut, mulching, heavy-duty version of 195-005									
96-900		21	5 pt. Star			2.50/.187	0	3/4	G3
Gator G3									
596-900		21	5 pt. Star			3.00/.164	0	1	
						High-Lift Xtended Fusion®			G5
Gator G5									
198-049	703371	**21**	bow-tie	5/16	2-1/2	2.25/.134	1/4	15/16	
						Xtended			100
21" walk-behind, mulching									
98-098		21	bow-tie	5/16	2-1/2	2.25/.134	1/4	13/16	
21" walk-behind									

GROUP CONTINUES

B

Blades - OEM Replacements

Snapper

	OREGON	OEM No.	Length	Center	Outer	C to C	W / T	Off	Lift	Prod. Code
			GROUP CONTINUES							
Gator® G3™	**98-631**		21	bow-tie	5/16	2-1/2	2.50/.187	5/16	3/4	G3
Gator G5™	**598-631**		21	bow-tie	5/16	2-1/2	3.00/.149	5/16	1	High-Lift Xtended Fusion® G5
(2) for 42" cut	**91-605**	1737816 1737816BM 1737816BMA 1737816BMYP 1737816BZ 1737816SM 1737816YP	**21-3/16**	13/16			2.25/.149	7/16	13/16	
Gator G6®	**391-605**		21-3/16	13/16			3.00/.250	7/16	1	Heavy-Duty High-Lift Xtended Fusion® G6
(2) for 42" cut	**91-610**	1731898 1731898A 1731898ASM 1731898BMA 1731898BZ 1731898BZYP	**21-3/16**	1			2.25/.149	7/16	1	
Gator G6	**391-610**		21-3/16	1			3.00/.250	7/16	1	Heavy-Duty High-Lift Xtended Fusion® G6
(2) for 42" cut	**91-607**	1758878BMYP	**21-5/16**	13/16			2.25/.149	0	5/8	
Gator G6	**391-607**		21-5/16	13/16			3.00/.250	0	1	Heavy-Duty High-Lift Xtended Fusion® G6
22" cut, 6.5GT, 6.75GT	**99-134**	7100851 7100851A 7100851AYP 7100851BM 7100851BMA 7100851BMYP 7100851BZ 721865	**21-5/8**	3/8	3/8	1-7/8	2.25/.134	1/4	1-1/8	
(1) for 22" cut, walk-behind	**91-611**	7103288 7103288BM 7103288BMA 7103288BZ 7103288YP	**22**	3/8	3/8	2-3/4	2.25/.164	3/16	1-1/4	Xtended
Gator® G5™	**591-611**		22	3/8	3/8	2-3/4	3.00/.134	5/16	1	High-Lift Xtended Fusion® G5

B

Snapper

	OREGON	OEM No.	Length	Center	Outer	C to C	W / T	Off	Lift	Prod. Code
(2) for 46" cut	**195-070**	704425	**22-7/8**	5 pt. Star	5/16	3-15/16	2.75/.164	5/16	1-1/8	Xtended — 100
(2) for 46" cut, mulching	**95-074**		22-7/8	5 pt. Star			2.25/.149	1/8	15/16	Xtended
Gator G3™	**96-370**		22-7/8	5 pt. Star			2.75/.187	1/4	3/4	Xtended — G3
Gator G5	**596-370**		22-7/8	5 pt. Star			3.00/.187	5/16	1	High-Lift Xtended Fusion® — G5
(3) for 72" cut	**91-609**	5102227S	**25**	5/8			2.50/.250	0	1	
Gator G6®	**396-731**	7046625 7046625BM 7046625BMYP 7046625YP	25	5/8			3.00/.250	0	1	Heavy-Duty High-Lift Xtended Fusion® — G6
28" cut, rear engine rider, punched for high-lift deflector 79-728	**99-113**	19515 7019515 7019515BMA 7019515BZ 7019515BZYP	**28**	1-1/16	1/2	7-1/2	2.75/.164	1/4	13/16	
28" cut, rear engine rider, no deflector holes	**99-131**	7104196 7104196BM 7104196BMA 7104196BZ 7104196BZYP 7104196YP	28	1-1/16	1/2	7-1/2	2.75/.164	1/4	13/16	
28" cut, rear engine rider, heavy-duty, punched for high-lift deflector 79-728	**99-114**		28	1-1/16	1/2	7-1/2	2.75/.187	1/4	13/16	
Gator® G3™	**96-628**	7016980 7016980BMA 7016980BZ 7016980BZYP 7026453 7035635 71040383	28	1-1/16	1/2	7-1/2	2.75/.187	1/4	3/4	G3
										71040383BM 71040383BZYP 7104083BMA 7104083BZ 7104083BZYP
Gator® G5™	**596-628**		28	1-1/16	1/2	7-1/2	3.00/.187	5/16	1	High-Lift Xtended Fusion® — G5

B

Blades - OEM Replacements

Snapper

	OREGON	OEM No.	Length	Center	Outer	C to C	W / T	Off	Lift	Prod. Code
30" cut, rear engine rider, punched for high-lift deflector 79-724	**99-112**	18069 7018069 7018069BMA 7018069BZ 7018069BZYP	**30**	1-1/16	1/2	7-1/2	2.75/.187	1/4	13/16	
Gator G3	**96-630**	7026565 7026565BM 7026565BMA 7026565BZ 7026565BZYP 7026565YP	30	1-1/16	1/2	7-1/2	2.75/.187	1/16	3/4	G3
33" cut, rear engine riders, punched for high-lift deflector 79-728	**99-117**	19523 7019523 7019523BMA 7019523BZ 7019523BZYP 7019523YP	**32-7/8**	1-1/16	1/2	7-1/2	2.75/.187	1/4	1	
Gator G3	**96-633**	7016982 7016982BMA 7016982BZ 7024741 7024741A 7024741AYP 7024741BMA 7024741BZ	32-7/8 7034168 7034168BMA 7034168BZ 7034168BZYP 7034185YP	1-1/16	1/2	7-1/2	2.75/.187	1/4	3/4	G3
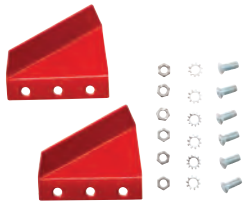 contains (2) 3 hole deflectors, (6) starlock washers, (6) 5/16-24 x 21/32 Grade #5, Oval head screws, (6) hex nuts. Fits 28" & 33" blades	**79-728**	3-7723 Air lift set	**4**							
Air lift set contains (2) deflectors, (4) starlock washers, (4) 5/16-24 x 21/32 Grade #5, Oval head screws, (4) hex nuts. Fits 28" & 33" blades	**79-724**	3-1724	**5-5/8**							

B

Can't find what you're looking for?
Try us online to search the latest products available.

OregonProducts.com

Spartan

	OREGON	OEM No.	Length	Center	Outer	C to C	W / T	Off	Lift	Prod. Code
(3) for 61" cut, RT and SRT	**93-011**	438-0002-00	**21**	5/8			2.50/.250	1/2	1-1/8	Xtended
(3) for 61" cut, low-lift, RT and SRT	**93-013**		21	5/8			2.50/.250	1/2	5/8	Xtended
Gator® G5™	**596-702**		21	5/8			3.00/.203	1/2	1	High-Lift Xtended Fusion® G5
Gator G6®	**396-702**		21	5/8			3.00/.250	1/2	1	Heavy-Duty High-Lift Xtended Fusion® G6

Steiner

	OREGON	OEM No.	Length	Center	Outer	C to C	W / T	Off	Lift	Prod. Code
(3) for 48" cut, ZTM 200 Series Zero Turn	**93-009**	112111-01	**16-1/4**	5/8			2.50/.203	1/2	1-1/8	
Gator G5	**593-600**		16-1/4	5/8			3.00/.203	1/2	1	High-Lift Xtended Fusion® G5
(3) for 52" cut, ZTM 200 Series Zero Turn	**93-010**	112111-02	**18**	5/8			2.50/.203	1/2	1-1/8	Xtended
(3) for 52" cut, ZTM 200 Series Zero Turn	**91-039**		18	5/8			2.50/.203	1/2	1	
Gator G3™	**93-601**		18	5/8			2.50/.203	1/2	3/4	G3
Gator G5	**593-601**		18	5/8			3.00/.203	1/2	1	High-Lift Xtended Fusion® G5
Gator G6	**393-601**		18	5/8			3.00/.250	1/2	1	Heavy-Duty High-Lift Xtended Fusion® G6

B

Blades - OEM Replacements

Steiner

	OREGON	OEM No.	Length	Center	Outer	C to C	W / T	Off	Lift	Prod. Code
(3) for 60" cut	**91-188**	79-035	**20-1/2**	1/2			2.50/.203	0	1	
							Xtended			
(3) for 60" cut, mulching	**91-217**		20-1/2	1/2			2.50/.203	0	1	
Gator G6®	**396-739**		20-1/2	1/2			3.00/.250	0	1	
							Heavy-Duty High-Lift Xtended Fusion®			G6
(3) for 61" cut, ZTM 200 Series Zero Turn	**93-011**	112111-03	**21**	5/8			2.50/.250	1/2	1-1/8	
							Xtended			
(3) for 61" cut, low-lift, ZTM 200 Series Zero Turn	**93-013**		21	5/8			2.50/.250	1/2	5/8	
							Xtended			
(3) for 61" cut, ZTM 200 Series Zero Turn	**91-135**		21	5/8			2.50/.203	1/2	1	
Gator G3™	**96-702**		21	5/8			2.50/.203	1/2	1	
										G3
Gator G5	**596-702**		21	5/8			3.00/.203	1/2	1	
							High-Lift Xtended Fusion®			G5
Gator G6	**396-702**		21	5/8			3.00/.250	1/2	1	
							Heavy-Duty High-Lift Xtended Fusion®			G6
(3) for 72" cut, standard-lift, also fits Ventrac OEM# 79-0038	**91-731**	79-068	**24-3/4**	1/2			2.50/.250	0	11/16	
Gator G6	**391-731**	79-037 79-038	24-3/4	1/2			3.00/.250	0	1	
							Heavy-Duty High-Lift Xtended Fusion®			G6

B

Sutech

OREGON	OEM No.	Length	Center	Outer	C to C	W / T	Off	Lift	Prod. Code
91-802	2107/11	**12-1/2**	5/8 h 3/4 w	1/4	1-5/8	2.00/.203	0	7/8	
(3) for 33" cut (straight cutting edge)									
96-632	2107/09 2107/10	12-1/8	5/8 h 3/4 w	1/4	1-5/8	2.50/.203	0	3/4	
Gator® G3™						Xtended			G3

Swisher

92-147	10358	**15-1/2**	3/4			2.50/.312	1/2	0	
(4) for 52" cut, RTB18552									
91-573	3295 5059	**17-1/2**	3/8	3/8	3	2.50/.187	1/2	3/4	
Gator G3 Fits ZT2350A, ZT2450A									G3
91-732	660	**20-1/2**	5/8 h 3/4 w			2.25/.187	0	7/8	
(3) for 60" cut									
91-050	9004 9037	**20-1/2**	3/8	3/8	3	2.25/.187	1/2	13/16	
(3) for 60" cut, model T-60 Finish Cut Trailmower									
91-574	3293	20-1/2	3/8	3/8	3	2.50/.187	1/2	3/4	
Gator G3 (3) For 60" cut, T-60, T1360, T14560, T18560, T1360H, ZT2350, ZT2660, ZT2560, ZT2660B									G3
391-574	20186	20-1/2	3/8	3/8	3	3.00/.250	1/2	1	
Gator G6®						Heavy-Duty High-Lift Xtended Fusion®			G6
91-051	9005 9036 B32S	**22**	3/8	3/8	3	2.25/.187	1/2	13/16	
(2) for 44" cut, model T-44 Finish Cut Trailmower									
392-677	12504 12925 15767	**22-1/2**	3/8	3/8	3	3.00/.250	0	1	
Gator G6 (2) for 44" cut and (3) for 66" cut						Heavy-Duty High-Lift Xtended Fusion®			G6

B

Blades - OEM Replacements

Toro

	OREGON	OEM No.	Length	Center	Outer	C to C	W / T	Off	Lift	Prod. Code
(3) for 36" cut, high-lift, for 1973-1976 side discharge mowers, fits long & short frame tractors. Plus, Commando 800, 5-0720, 5-0721, 5-0722 & 65-26M201 & 1-100776	**91-802**	100776 100777 101335	**12-1/8**	5/8 h 3/4 w	1/4	1-5/8	2.00/.203	0	7/8	
Gator® G3™	**96-632**		12-1/8	5/8 h 3/4 w	1/4	1-5/8	2.50/.203 Xtended	0	3/4	G3
(3) for 42" cut, side discharge	**91-805**	106077 106077-03 106636	**13-7/8**	3/4			2.00/.203	0	1-1/16	
Gator G3	**90-643**		13-7/8	3/4			2.50/.203	0	3/4	G3
Gator G3 (3) for 40" cut, turbo force deck	**96-374**	108-4081 108-4081-03 108-4089-03 108-4110-03 108-4111-03 108-4112-03 114-4961	**14** 114-4962 114-4963 114-4964 114-4965	5/8			2.50/.250	0	3/4	G3
(3) for 42" cut, rear discharge	**91-804**	106108 106635 14-4879 79-2920 79-2920-03	**14-1/2**	3/4			2.00/.203	0	7/8	
(1) 98-061 & (2) 198-063 for 46" cut, center blade, LX460, LX465, LX466, LX468	**98-061**	112-0302 112-3692	**14-7/8**	5/8 6 pt. Star			2.50/.149 Xtended	7/16	1-3/16	
(1) 98-084 & (2) 98-085 for 46" cut, center blade, LX460, LX465, LX466, LX46	**98-084**		14-7/8	5/8 6 pt. Star			2.50/.203 Xtended	7/16	1-1/8	
Gator G3	**98-637**		14-7/8	5/8 6 pt. Star			2.50/.187	7/16	3/4	G3
Gator G5, (2) for 30" cut, 22200 Turfmaster walk-behind	**594-601**	116-6358-03 116-6358-S	**15-3/8**	5/8	5/16	1-1/4	3.00/.134 High-Lift Xtended Fusion®	5/16	1	G5

B

Toro

	OREGON	OEM No.	Length	Center	Outer	C to C	W / T	Off	Lift	Prod. Code
(3) for 44" cut, SFS deck	**94-026**	106-0627 54-0010 54-0010-03 54-0010-09	**15-1/2**	5/8			2.50/.187	5/16	3/4	
(3) for 44" cut, high-lift, SFS deck	**94-039**	108-1125 44-5480 55-4940 55-4940-03 55-4940-09	15-1/2	5/8			2.50/.203	5/16	15/16	
(3) For 44" cut, mulcher, SFS deck, recycler	**94-061**	106-0630 92-7952 92-7952-03 92-7952-09	15-1/2	5/8			2.50/.187	5/16	1	
Gator® G3™	**94-615**	100200 100-6490-03 104-1300 108-1116	15-1/2	5/8			2.50/.203	5/16	3/4	G3
(3) for 48" cut, side discharge, 5XI, XT Series, Z480, ZX480	**91-806**	106078 106637	**16-1/16**	3/4			2.00/.203	0	15/16	
Gator G3	**90-644**		16-1/16	3/4			2.50/.203	0	3/4	G3
(1) 98-061 & (2) 198-063 for 46" cut, outside blades, LX460, LX465, LX466, LX468	**198-063**	112-0304 112-3691	**16-1/4**	5/8 6 pt. Star			2.50/.149	7/16	1-1/8	Xtended 100
(1) 98-084 & (2) 98-085 for 46" cut, outside blades, LX460, LX465, LX466, LX468	**98-085**		16-1/4	5/8 6 pt. Star			2.50/.203	7/16	1-1/8	Xtended
Gator G3	**98-640**		16-1/4	5/8 6 pt. Star			2.50/.187	7/16	3/4	G3
Gator G5™	**598-640**		16-1/4	5/8 6 pt. Star			3.00/.164	7/16	1	High-Lift Xtended Fusion® G5

B

Blades - OEM Replacements

Toro

	OREGON	OEM No.	Length	Center	Outer	C to C	W / T	Off	Lift	Prod. Code
(2) for 32" cut, (3) for 48" cut	**91-313**	103-2527 1-323515 E323515	**16-1/4**	5/8			2.50/.203	0	1	
(2) for 32" cut, (3) for 48" cut	**91-180**		16-1/4	5/8			2.50/.187	0	1	
(2) for 32" cut, (3) for 48" cut, heavy-duty	**91-183**		16-1/4	5/8			2.50/.250	0	1	
(2) for 32" cut, (3) for 48" cut	**99-127**		16-1/4	5/8			2.50/.203	0	1-1/16	
(2) for 32" cut, (3) for 48" cut, mulching	**91-368**	103-2507 103-2517 1-403149 E403149	16-1/4	5/8			2.50/.203 Xtended	0	1	
Gator® G3™	**96-310**		16-1/4	5/8			2.50/.203	0	3/4	G3
Gator G5™	**596-310**		16-1/4	5/8			3.00/.203 High-Lift Xtended Fusion®	0	1	G5
Gator G6®	**396-716**		16-1/4	5/8			3.00/.250 Heavy-Duty High-Lift Xtended Fusion®	0	1	G6
(3) for 48" cut, Titan	**92-029**	109-6872	**16-1/4**	15/16			2.50/.203 Xtended	0	1	
(3) for 48" cut, mulching, Titan	**92-026**		16-1/4	15/16			2.50/.203 Xtended	0	1	
Gator G3	**96-321**		16-1/4	15/16			2.50/.203	0	1	G3
Gator G5	**596-321**		16-1/4	15/16			3.00/.203 High-Lift Xtended Fusion®	0	1	G5
Gator G6	**396-321**		16-1/4	15/16			3.00/.250 Heavy-Duty High-Lift Xtended Fusion®	0	1	G6

B

Toro

	OREGON	OEM No.	Length	Center	Outer	C to C	W / T	Off	Lift	Prod. Code
			GROUP CONTINUES							
(3) for 48" deck, fits Toro Commercial Recycler Mowers	**94-125** NEW	1073196	**16-1/2**	5/8			2.50/.250	0	1-1/8	
(3) for 48" cut, high-lift, turbo force deck	**92-036**	107-3192 107-3192-03	16-1/2	5/8			2.50/.250	0	1	
(3) for 48" cut, Extra high-lift, turbo force decks built 2010 and later	**91-621**		16-1/2	5/8			3.00/.203	0	1-1/2	
(3) for 48" cut, low-lift, turbo force deck	**92-207**		16-1/2	5/8			2.50/.203	0	13/16	
							Xtended			
(3) for 48" cut, mulching, turbo force deck	**92-743**		16-1/2	5/8			2.50/.203	0	1	
							Xtended			
(3) for 48" cut, turbo force deck	**91-620**		16-1/2	5/8			2.50/.203	0	1	
							Xtended			
(3) for 48" cut, turbo force deck	**92-145**		16-1/2	5/8			2.50/.203	0	1	
(3) for 48" cut, turbo force deck	**99-126**		16-1/2	5/8			2.50/.203	0	1-1/16	
Gator® G3™	**96-308**	107-3193 107-3193-03 107-3194 107-3194-03 107-3195 107-3195-03 107-3196	16-1/2 107-3196-03 110-0415 110-0416 110-0417	5/8			2.50/.203	0	1	G3
Gator G5™, turbo force decks built 2010 and later	**596-308**		16-1/2	5/8			3.00/.203	0	1	
							High-Lift Xtended Fusion®			G5
Gator G6®, turbo force decks built 2010 and later	**396-735**		16-1/2	5/8			3.00/.250	0	1	
							Heavy-Duty High-Lift Xtended Fusion®			G6
(3) for 50" cut, model 718Z	**91-502**	113579 113579-09	**17**	5/8			2.50/.203	0	1-3/16	
							Xtended			
(3) for 50" cut, high-lift, model 718Z	**91-505**		17	5/8			2.50/.250	0	1-1/8	
							Xtended			

GROUP CONTINUES

B

Blades - OEM Replacements

Toro

	OREGON	OEM No.	Length	Center	Outer	C to C	W / T	Off	Lift	Prod. Code
			GROUP CONTINUES							
Gator G3	**96-323**	108-4115-03 108-4117-03 110-9915-03 110-9961-03 114-4956 114-4957 114-4959 114-4960	17	5/8			2.50/.203	0	1	G3
Gator G5	**596-323**		17	5/8			3.00/.203	0	1	High-Lift Xtended Fusion® G5
Gator G6	**396-723**		17	5/8			3.00/.250	0	1	Heavy-Duty High-Lift Xtended Fusion® G6
(2) for 34" cut, Turbo Force, Z Master, Z300, Z334	**94-085**	110-9915-03 114-4959	**17-1/2**	5/8			2.50/.250	0	1	
Gator® G5™	**594-085**	108-4115-03 108-4117-03 110-9961-03 114-4956 114-4957 114-4960	17-1/2	5/8			3.00/.203	0	1	High-Lift Xtended Fusion® G5
(3) for 50" cut, high-lift, TimeCutter (MX5060, SS5000, SS5035, SS5060)	**94-128**	115-5059 115-5059-03	**17-1/2**	5/8			2.25/.164	5/16	1-1/4	
Gator G5	**594-078**	115-5062-03	17-1/2	5/8			3.00/.164	3/8	1	High-Lift Xtended Fusion® G5
(3) for 50" cut, TimeCutter Z(5000, 5020, 5030, 5035, 5040, 5060)	**94-063**	112-9759-03	**17-1/2**	5/8			2.25/.164	1/2	15/16	
(3) for 50" cut, high-lift, TimeCutter Z(5000, 5020, 5030, 5035, 5040, 5060)	**94-059**	110-6837-03	17-1/2	5/8			2.25/.164	7/16	1-3/16	
Gator G3™	**96-382**		17-1/2	5/8			2.25/.187	7/16	3/4	G3

B

Toro

	OREGON	OEM No.	Length	Center	Outer	C to C	W / T	Off	Lift	Prod. Code
(3) for 50" cut, GT2100, GT2200, LX500, SL500	**198-086**	112-0316	**17-3/4**	5/8 6 pt. Star			2.50/.149	7/8	3/4	Xtended — 100
(3) for 50" cut, high-lift, GT2100, GT2200, LX500, SL500	**98-097**		17-7/8	5/8 6 pt. Star			2.50/.149	15/16	1-3/8	
Gator G3	**91-938**		17-7/8	5/8 6 pt. Star			2.50/.187	15/16	3/4	G3
Gator G5	**591-938**		17-7/8	5/8 6 pt. Star			3.00/.164	15/16	1	High-Lift Xtended Fusion® — G5
(2) for 36" cut, (3) for 52" cut, SFS deck	**94-018**	106-0628 27-0990 27-0990-03 27-0990-09 44-5480	**18**	1/2			2.50/.187	3/16	11/16	
(2) for 36" cut, (3) for 52" cut, high-lift, SFS deck	**94-022**	106-0626 56-2390 56-2390-03 56-2390-09	18	1/2			2.50/.187	3/16	1	
Gator® G3™	**94-618**	104-1301 108-1127 108-1477 92-7961 92-7961-03 92-7961-09	18	1/2			2.50/.203	3/16	3/4	G3
(3) for 52" cut, Time Cutter ZX	**94-064**	107-1741-03	**18**	5/8			2.50/.187	3/16	11/16	
Gator G3	**96-395**	107-1742 107-1742-03 120-2379 120-2379-03	18	5/8			2.50/.203	3/16	3/4	G3
(3) for 52" Z Force Turbo master decks	**94-135** NEW	110-0406 105779503	**18**	5/8			2.50/.250	0	11/16	
(2) for 36" cut, (3) for 52" cut, turbo force deck, Laser Z, Metro, ProLine,Turf Ranger, Turf Tracer, Viking	**91-181**	1-633485 E633485	18	5/8			2.50/.187	0	1	Xtended

GROUP CONTINUES

B

Blades - OEM Replacements

Toro

	OREGON	OEM No.	Length	Center	Outer	C to C	W / T	Off	Lift	Prod. Code
			GROUP CONTINUES							
	94-053	105-7781 105-7781-03	18	5/8			2.50/.250	0	1	
(2) for 36", (3) for 52" cut, high-lift, turbo force deck, Laser Z, Metro, ProLine,Turf Ranger, Turf Tracer, Viking										
	91-312	103-2528 1-633482 E633482	18	5/8			2.50/.203	0	1	
							Xtended			
(2) for 36", (3) for 52" cut, turbo force deck, Laser Z, Metro, ProLine,Turf Ranger, Turf Tracer, Viking										
	94-132 NEW	105777903	18	5/8			2.50/.250	0	1-1/8	
(3) for 52", 2 for 36" decks										
	91-623		18	5/8			3.00/.203	0	1-1/2	
							Xtended			
(2) for 36" cut, (3) for 52", super high-lift cut, turbo force deck, Laser Z, Metro, ProLine,Turf Ranger, Turf Tracer, Viking										
	91-235		18	5/8			2.50/.250	0	7/8	
							Xtended			
(2) for 36" cut, (3) for 52" cut, low-lift, turbo force deck, Laser Z, Metro, ProLine,Turf Ranger, Turf Tracer, Viking										
	91-184		18	5/8			2.50/.250	0	1	
							Xtended			
(2) for 36" cut, (3) for 52" cut, heavy-duty, turbo force deck, Laser Z, Metro, ProLine,Turf Ranger, Turf Tracer, Viking										
	91-335	103-2518	18	5/8			2.50/.203	0	1	
							Xtended			
(2) for 36" cut, (3) for 52" mulching, recycler, turbo force deck, Laser Z, Metro, ProLine,Turf Ranger, Turf Tracer, Viking										
	91-256	105-7794 105-7794-03	18	5/8			2.50/.203	0	1	
							Xtended			
(2) for 36" cut, (3) for 52" mulching, turbo force deck, Laser Z, Metro, ProLine,Turf Ranger, Turf Tracer, Viking										
	91-622		18	5/8			2.50/.203	0	1	
							Xtended			
(2) for 36" cut, (3) for 52" cut, turbo force deck, Laser Z, Metro, ProLine,Turf Ranger, Turf Tracer, Viking										
			GROUP CONTINUES							

B

Toro

	OREGON	OEM No.	Length	Center	Outer	C to C	W / T	Off	Lift	Prod. Code
(2) for 36" cut, (3) for 52" cut, turbo force deck, Laser Z, Metro, ProLine,Turf Ranger, Turf Tracer, Viking	**91-637**		18	5/8			2.50/.203	0	1	
Gator® G3™	**96-344**	103-2508 105-7779 105-7779-03 105-7795 105-7795-03 105-7796 105-7796-03	18 108-1118 110-0406 110-0408 110-0409	5/8			2.50/.203	0	3/4	G3
(3) for 52" cut, Titan Z5200	**92-030**	109-6873	**18**	15/16			2.50/.203	0	1	Xtended
(3) for 52" cut, mulching, Titan Z5200	**92-027**		18	15/16			2.50/.203	0	1	
Gator G3	**96-322**		18	15/16			2.50/.203	0	1	Xtended G3
Gator G5™	**596-322**		18	15/16			3.00/.203	0	1	High-Lift Xtended Fusion® G5
Gator G6®	**396-322**		18	15/16			3.00/.250	0	1	Heavy-Duty High-Lift Xtended Fusion® G6
(3) for 54" cut, mulching, Titan MX5400, MX5480, ZX5400, ZX5420, ZX5450	**94-060**	115-9650-03	**18-3/4**	5/8			2.25/.164	5/16	1-1/8	G3
(3) for 54" cut, mulcher, Titian ZX5400 and ZX5420	**94-070**	115-4999 115-4999-03	18-3/4	5/8			2.25/.164	5/16	7/8	
Gator G3	**96-803**	115-2454-03 115-9650-03	18-3/4	5/8			2.25/.164	5/16	3/4	G3
Gator G6	**396-803**		18-3/4	5/8			3.00/.250	5/16	1	Heavy-Duty High-Lift Xtended Fusion® G6

B

Blades - OEM Replacements

Toro

	OREGON	OEM No.	Length	Center	Outer	C to C	W / T	Off	Lift	Prod. Code
(7) for 455D, 4100D	**94-043**	106-7166-03 86-0010 86-0010-03	**19**	1/2			2.50/.250	3/16	7/8	
Gator G3	**96-701**	107-0210-03 107-0215 107-0215-03 108-1451 108-1452 110-6116-03	19	1/2			2.50/.250	3/16	1	G3
(2) for 38" cut, recycler mulching blade	**94-032**	14-4889 14-7799 79-1720 79-3060 79-3061 79-3061-03	**19-1/4**	5/8			2.50/.187	9/16	3/4	
(2) for 38" cut, high-lift, front engine rider	**94-038**	57-4700 57-4700-03 57-4700-09	19-1/4	5/8			2.50/.187	9/16	1-1/4	
Gator® G3™	**94-602**		19-1/4	5/8			2.50/.203	9/16	3/4	G3
(11) for 192" cut, Groundsmaster 5900 and 5910	**94-079**	110-5946 110-5946-03	**20**	1/2			2.50/.250	1/2	15/16	
Gator G3	**96-802**	110-5948 110-5948-03	20	1/2			2.50/.250	1/2	3/4	G3
(11) for 16' cut, Groundsmaster 580D model	**94-029**	69-6920	**20**	5/8			2.50/.250	3/16	1	
Gator G3	**94-620**	107-0217-03 108-1453	20	5/8			2.50/.203	3/16	3/4	G3
(3) for 60" cut, Groundsmaster 7200	**94-072**	110-4702-03	**20-1/2**	1/2			2.50/.250	0	3/4	
(3) for 60" rear discharge Z Master decks	**94-133** NEW	108-1128 105771603	20-1/2	5/8			2.50/.250	0	11/16	
(3) for 60" Deck	**94-138** NEW	110-4701	20-1/2	5/8			2.50/.250	0	1	

GROUP CONTINUES

B

Toro

	OREGON	OEM No.	Length	Center	Outer	C to C	W / T	Off	Lift	Prod. Code
(3) for 60" deck, fits Professional Z Master with 7-guage side	**94-126** NEW	105771503	20-1/2	5/8			2.50/.250	0	1	
Gator G3	**96-801**	110-4701 110-4701-03 110-4703 110-4703-03	20-1/2	1/2			2.50/.250	0	1	G3
(3) for 60" cut	**91-503**	112947	**20-1/2**	5/8			2.50/.203	0	1-3/16	Xtended
(3) for 60" deck, Recycler decks	**94-130** NEW	105777703	20-1/2	5/8			2.50/.250	0	1-1/8	
(3) for 60" cut, high-lift, turbo force deck	**94-055**	105-7718 105-7718-03 108-1114	20-1/2	5/8			2.50/.250	0	1	
Gator G3	**96-319**	105-7715 105-7715-03 105-7716 105-7716-03 105-7777 105-7777-03 105-8777 105-8777-03	20-1/2 106-8777 108-1115 108-1123 108-1128 110-0405 125-9329-01	5/8			2.50/.203	0	3/4	G3
Gator G5™ Turbo Force deck built 2010 and later	**596-319**		20-1/2	5/8			3.00/.203	0	1	High-Lift Xtended Fusion® G5
Gator G6® Turbo Force deck built 2010 and later	**396-740**		20-1/2	5/8			3.00/.250	0	1	Heavy-Duty High-Lift Xtended Fusion® G6
(1) for 21" cut, walk-behind recycler	**94-127**	14-1659 62-7700 62-7700-03 62-7700-03P 75-9420 91-2256	**20-15/16** 91-2256-03 91-2256-03P 91-2256-03-PLT	7/16	3/8	2-7/16	2.25/.134	5/16	7/8	
21" cut, super high-lift, Vacu-Power models, walk-behind mower	**94-770**		20-15/16	7/16	3/8	2-7/16	2.25/.134	3/8	7/8	
Gator® G3™ Will not fit BBC equipped mowers.	**96-600**		20-15/16	7/16	3/8	2-7/16	2.25/.134	5/16	3/4	G3

GROUP CONTINUES

Blades - OEM Replacements

Toro

	OREGON	OEM No.	Length	Center	Outer	C to C	W / T	Off	Lift	Prod. Code
(1) for 21" cut, walk-behind mower	**94-051**	108-3762-03 108-3762-03P 91-3106 93-4106-03 93-4106-03P	**20-7/8**	7/16	3/8	2-1/2	2.25/.149	7/16	7/8	
Gator G3	**96-660**	108-0954 108-0954-03	20-7/8	7/16	3/8	2-1/2	2.25/.134	7/16	1	G3
(1) for 21" cut, walk-behind mower	**92-011**	612543 612543-01 612543-03 683682 684380	**20-15/16**	5/8	1/2	2-9/16	3.00/.120	11/16	7/8	
21" cut, Grassmaster models 1974-1977, used on models with blade brake clutch	**94-017**	107-4276-03 26-0880 3-8615 42-1000 42-1000-03 5-0751	**21**	7/16	3/8	2-7/16	2.25/.134	5/16	7/8	
(3) for 62" cut, SFS deck	**94-019**	106-0629 44-6250 44-6250-03	**21-1/2**	1/2			2.50/.187	3/16	11/16	
Gator G3	**94-621**	104-1303 106-0631	21-1/2	1/2			2.50/.203	3/16	3/4	G3
Gator G6 (2) for 42" cut, Timecutter MX4200, MX4250 SS4200, SS4225, SS4250, SW4200	**394-129**	114-1625 131-3939-03 131-3939-03P 79220 79220P	**21-9/16**	5/8			3.00/.250	5/16	1	Heavy-Duty High-Lift Xtended Fusion® G6
(2) for 42" cut, Time Cutter Z	**94-069**	110-1857-03 110-6568 110-6568-03 117-5372-03	**21-9/16**	5/8			2.25/.164	5/8	1-1/4	
(2) for 42" cut, mulcher, recycler, Time Cutter Z	**94-068**	106-2247 106-2247-03	21-9/16	5/8			2.25/.164	9/16	13/16	
Gator® G3™	**96-362**		21-9/16	5/8			2.25/.187	5/8	3/4	G3
Gator G5™	**596-362**		21-9/16	5/8			3.00/.187	5/8	1	High-Lift Xtended Fusion® G5

B

Toro

	OREGON	OEM No.	Length	Center	Outer	C to C	W / T	Off	Lift	Prod. Code
	94-045	92-5608 92-5608-03	**21-11/16**	1/2			2.50/.250	1/2	1	
(3) for 62" cut, recycler, (7) for 11' Groundmaster 4000d										
	96-708	107-0241-03 110-6115-03	21-11/16	1/2			2.50/.250	1/2	1	G3
Gator G3										
	94-322	104-8697 104-8697-03 104-8697-03P	**21-11/16**	7/16	3/8	2-1/2	2.25/.149	7/16	13/16	
(1) for 22" cut, walk-behind mower, recycler										
	96-607	108-9764 108-9764-03 108-9764-03P 131-4546-03 131-4547-03 59534 59534P	21-11/16	7/16	3/8	2-1/2	2.25/.149	7/16	3/4	G3
Gator G3										
	94-075	108-7395-03	**22**	1/2			2.50/.250	1/2	15/16	
Combo, 4300-D										
	94-077	117-0209-03	22	1/2			2.50/.187	7/16	1	
Angle, 4300-D										
	94-076	114-0434-03	22	1/2			2.50/.250	1/2	1	
High-lift, 4300-D										
	96-075		22	1/2			2.50/.187	1/2	3/4	G3
Gator® G3™										
	394-075	114-0435-03	22	1/2			3.00/.250	1/2	1	
Gator G6®										Heavy-Duty High-Lift Xtended Fusion® G6
	94-074	110-0621 110-0621-03	**24-1/2**	1/2			2.50/.250	0	1	
(3) for Groundsmaster 3280-D3320										
	94-071	110-0622-03 110-0624 110-0624-03	24-1/2	1/2			2.50/.250	0	3/4	G3
Gator G3										

B

Blades - OEM Replacements

Toro

	OREGON	OEM No.	Length	Center	Outer	C to C	W / T	Off	Lift	Prod. Code
(3) for 72" deck, low-lift	**94-136** NEW	110-0410 105771203	**24-1/2**	5/8			2.50/.250	0	11/16	
(3) for 72" mid-flow deck, Z Master	**94-134** NEW	110-0404 105771103	24-1/2	5/8			2.50/.250	0	1	
(3) for 72" cut, high-lift, turbo force deck	**92-035**	105-7784 105-7784-03 108-1120	24-1/2	5/8			3.00/.250	0	1-3/16	
(3) for 72" deck	**94-131** NEW	105777803	24-1/2	5/8			2.50/.250	0	1-1/8	
Gator G3	**96-341**	105-7711 105-7711-03 105-7712 105-7712-03 105-7719 105-7719-03 105-7778	24-1/2	5/8			2.50/.203	0	3/4	G3
		105-7778-03 108-1126 110-0404 110-0410 110-0411								
Gator G5™, Turbo Force deck built 2010 and later	**596-341**		24-1/2	5/8			3.00/.203	0	1	High-Lift Xtended Fusion® G5
Gator G6, Turbo Force deck built 2010 and later	**396-764**		24-1/2	5/8			3.00/.250	0	1	Heavy-Duty High-Lift Xtended Fusion® G6
Gator G3 (3) for 72" cut, rear discharge, right-hand cut, Groundmaster	**96-724**	52-0240 52-0250 52-0260	**24-3/4**	1/2			2.50/.250	1/2	1	G3
(3) for 72" cut, high-lift, left-hand cut, heavy-duty, Groundsmaster	**94-011**	29-5530 29-5530-03	**25**	3/4			2.50/.250	1/4	1-1/16	
Gator G3	**96-602**		25	3/4			2.50/.250	1/4	1	G3
(1) 92-167 & (1) 92-168 for 48" cut, left-hand cut, Z Master	**92-167**	130-2862	**25**	7/8	1/4	3	2.75/.164	1-1/16	13/16	
(1) 92-167 & (1) 92-168 for 48" cut, Z Master	**92-168**	130-2861	25	7/8	1/4	3	2.75/.164	1-1/16	13/16	

B

Toro

	OREGON	OEM No.	Length	Center	Outer	C to C	W / T	Off	Lift	Prod. Code
(3) for 72" cut, recycler, Groundsmaster	**94-040**	85-6040 85-6040-03	**25-3/16**	1/2			2.50/.250	1/4	1-1/8	
Gator® G3™	**96-705**		25-3/16	1/2			2.50/.250	1/4	1	G3
(3) for 72" cut, Z597-D Z Master	**94-073**	108-1958 108-1958-03	**25-3/16**	1/2			2.50/.250	1/2	1-1/8	
(3) for 72" cut, 3500-D, 3505-D, 4500-D, 4700-D	**94-052**	100-5754 100-5754-03 105-9810 105-9810-03 105-9810-05	**27**	1/2			2.50/.250	1/2	15/16	
(3) for 72" cut, 3500-D, 3505-D, 4500-D, 4700-D	**94-049**	108-9026-03	27	1/2			2.50/.250	1/2	3/4	
Gator G3	**96-741**	104-5183 105-4089 105-4089-03 107-0235-03	27	1/2			2.50/.250	1/2	1	G3
(1) for 32" cut, timecutter, recycler	**94-021**	33-4750 33-4750-03	**31-7/16**	5/8			2.50/.187	5/16	1-3/16	

Troy-Bilt (also see MTD)

(2) 198-063 & (1) 98-061 for 46" cut - star center hole, outside blades, MTD 3-in-1 mulcher, 1999 & after, fits auto-drive step-through tractors	**198-063**		**16-1/4**	5/8 6 pt. Star			2.50/.149	7/16	1-1/8	Xtended 100
(2) 98-057 & (1) 98-056 for 46" cut, outside blades for 600" & 800 series, deep deck, 1996 and before	**98-057**	742-0542 942-0542	16-1/4	11/16 6 pt. Star	5/16	2-1/2	3.00/.120	5/16	1-3/16	
(2) 198-063 & (1) 98-061 for 46" cut - star center hole, outside blades, 3-in-1 mulcher, 1999 & after, fits auto-drive step-through tractors	**198-063**	742-0611 742-0611A 942-0611 942-0611A	**16-1/4**	5/8 6 pt. Star			2.50/.149	7/16	1-1/8	Xtended 100
(2) 98-085 & (1) 98-084 for 46" cut - star center hole, outside blades, 3-in-1 mulcher, 1999 & after, fits auto-drive step-through tractors	**98-085**		16-1/4	5/8 6 pt. Star			2.50/.203	7/16	1-1/8	Xtended

GROUP CONTINUES

Blades - OEM Replacements

Troy-Bilt (also see MTD)

	OREGON	OEM No.	Length	Center	Outer	C to C	W / T	Off	Lift	Prod. Code
Gator® G3™	**98-640**	742-04043 742-04125-X 742-0611-X 942-04125-X 942-0611-X	16-1/4	5/8 6 pt. Star			2.50/.187	7/16	3/4	G3
Gator G5™	**598-640**	742-04043 742-04125-X 742-0611-X 942-04125-X 942-0611-X	16-1/4	5/8 6 pt. Star			3.00/.164	7/16	1	G5 High-Lift Xtended Fusion®
(3) for 46" cut - star center hole, deep deck, 1997 & after use (2) 98-054 with (1) 98-069 for 46" cut, outside blades for 46" cut model series 600 & 800 built since 1997	**98-054**	742-0644 942-0644	**16-1/4**	5/8 6 pt. Star			3.00/.120	5/16	1-3/16	
Gator G3	**98-634**		16-1/4	5/8 6 pt. Star			2.50/.187	5/16	3/4	G3
(3) for 50" cut, side discharge, fits models 985,992,993, 958, 998 - 1997 & before	**98-037**	742-0171 742-0171B 942-0171B OEM-742-0171B	**17-1/4**	3/8	5/5/16	2-1/2	2.50/.187	5/16	1-1/8	
(2) for 33" cut, wide-area mowers, TBWC33XP	**98-094**	742-04154 742-04154A 942-04154 942-04154A	**17-7/8**	bow-tie			2.50/.149	1	1-1/8	
Gator G3	**98-671**		17-7/8	bow-tie	5/16	2-1/2	2.50/.149	1	3/4	G3
19" cut, mulching, 12AE189D011, 12AE189E211	**92-140**	742-0739 942-0739	**19**	bow-tie	5/16	2-1/2	2.25/.134	1/4	1-1/8	
(2) for 38" cut, star center hole, mulcher, MTD , 3-in-1 blade, deep deck - 1992 & after	**198-058**		**19-5/16**	5/8 6 pt. Star			2.75/.149	3/8	1-1/2	100 Xtended
(2) for 38" cut, use in place of our 198-058 for non-mulching	**198-052**		19-5/16	5/8 6 pt. Star			3.00/.149	5/16	1-1/4	100 Xtended

GROUP CONTINUES

B

Troy-Bilt (also see MTD)

	OREGON	OEM No.	Length	Center	Outer	C to C	W / T	Off	Lift	Prod. Code
			GROUP CONTINUES							
Gator® G3™	**98-628**		19-5/16	5/8 6 pt. Star			2.50/.187	5/16	3/4	G3
Gator G5™	**598-628**		19-5/16	5/8 6 pt. Star			3.00/.164	5/16	1	High-Lift Xtended Fusion® G5
21" cut, mulcher, 1995 and er, fits bowtie center hole	**198-049**	490-100-M084 742-0741 742-0741A 942-0641 OEM-742-0741	**21**	bow-tie	5/16	2-1/2	2.25/.134	1/4	15/16	Xtended 100
21" cut	**98-098**		21	bow-tie	5/16	2-1/2	2.25/.134	1/4	13/16	
Gator G3	**98-631**		21	bow-tie	5/16	2-1/2	2.50/.187	5/16	3/4	G3
Gator G5	**598-631**		21	bow-tie	5/16	2-1/2	3.00/.149	5/16	1	High-Lift Xtended Fusion® G5
(2) for 42" cut, deep deck - 1997 & after; auto-drive 1999 & after	**98-093**	490-110-M108 742-04308 742-0656 942-04308 942-0656 OEM-742-04308	**21-3/16**	5/8 6 pt. Star			2.75/.149	3/8	7/8	
(2) for 42" cut, high-lift, deep deck - 1997 & after; auto-drive 1999 & after	**198-153**	742-04087 942-04087	21-3/16	5/8 6 pt. Star			3.00/.149	5/16	1-1/4	Xtended 100
(2) for 42" cut, mulcher, deep deck - 1997 & after; auto-drive 1999 & after	**198-059**	490-110-M115 7420616 742-0616A 942-0616 942-0616A GW-7420616 OEM-742-0616	21-3/16	5/8 6 pt. Star			2.75/.149	3/8	1-1/2	Xtended 100
Gator® G3™	**98-629**	742-04312 742-04410 742-4360 942-04308-X 942-04312 942-04312-X 942-04360-0684 942-04410 942-04410-0684 942-0616-X 942-4360	21-3/16	5/8 6 pt. Star			2.50/.187	5/16	3/4	G3
Gator G5™	**598-629**		21-3/16	5/8 6 pt. Star			3.00/.164	5/16	1	High-Lift Xtended Fusion® G5

B

Blades - OEM Replacements

Troy-Bilt (also see MTD)

	OREGON	OEM No.	Length	Center	Outer	C to C	W / T	Off	Lift	Prod. Code
(2) for 46" cut, LTX1045, LTX1046, LTX1046VT	**98-096**	490-110-C131 742-04244 742-04244A 742-04290 942-04244 942-04244A 942-04290	**23-1/4**	5/8 6 pt. Star			3.75/.149	1/4	1-3/8	
Gator G3	**96-401**	742-04290-X 742-04361 942-04244A-X 942-04244-X 942-04361	23-1/4	5/8 6 pt. Star			3.00/.149	1/4	1	G3

Walker

(2) for 36" cut, (3) for 56" cut, (4) for 74" cut, side discharge	**91-911**	5705-0 5705-1	**20**	5/8	3/16	3	2.75/.203	1-1/16	3/4	
(1) 91-912 & (1) 91-913 for 42", rear discharge left-hand cut	**91-912**	5705-4	**22**	5/8	3/16	3	2.75/.203	1-1/16	3/4	
(1) 91-913 & (1) 91-912 for 42", rear discharge, right-hand cut, (3) for 62" cut, (2) for 42" cut, side discharge	**91-913**	5705-3	**22**	5/8	3/16	3	2.75/.203	1-1/16	3/4	
(1) 91-919 & (1) 91-920 for 48" cut, rear discharge, low-lift, left-hand cut	**91-919**	7705-2	**25**	5/8	3/16	3	2.75/.203	1-1/16	3/4	
(1) 91-917 & (1) 91-918 for 48" cut, rear discharge, high-lift, left-hand cut	**91-917**		25	5/8	3/16	3	2.75/.203	1-1/16	7/8	
(1) 91-920 & (1) 91-919 for 48" cut, rear discharge, low-lift, right-hand cut	**91-920**	7705-1	**25**	5/8	3/16	3	2.75/.203	1-1/16	3/4	
(1) 91-918 & (1) 91-917 for 48" cut, rear discharge, high-lift, right-hand cut	**91-918**		25	5/8	3/16	3	2.75/.203	1-1/16	7/8	
(1) 92-176 & (1) 91-177 for 52" cut, left-hand cut	**92-176**	7705-7	**27**	5/8	3/16	3	2.75/.203	1-1/16	7/8	
(1) 92-176 & (1) 91-177 for 52" cut, right-hand cut	**92-177**	7705-6	27	5/8	3/16	3	2.75/.203	1-1/16	7/8	

B

Woods

	OREGON	OEM No.	Length	Center	Outer	C to C	W / T	Off	Lift	Prod. Code
(6) for 44" cut	**91-767**	24590 24590KT	**11-3/8**	7/8			2.50/.250	7/16	1-1/4	Xtended
(3) for 44" cut, (1) 91-557 & (2) 91-558 for 48" cut, 1250, 1850, 1855, 2855, 5120, 5140, 5180, 5182, 5200, 5210, 5215, 5250, 6170, D4414, D4414-3, D14414T, D4818-2, DM4415, DM5219, DO4814, DO4818-3, DO4818T Mow`n Machine	**91-557**	70014 7014KT	**15**	1/2			2.50/.250	5/16	3/4	
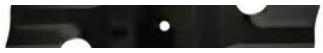 (3) for 44" cut, (1) 91-557 & (2) 91-558 for 48" cut, high-lift, 1250, 1850, 1855, 2855, 5120, 5140, 5180, 5182, 5200, 5210, 5215, 5250, 6170, D4414, D4414-3, D14414T, D4818-2, DM4415, DM5219, DO4814, DO4818-3, DO4818T Mow`n Machine	**91-536**		15	1/2			2.50/.250	5/16	1	
(3) for 44" cut, 1250, 1850, 1855, 2855, 5120, 5140, 5180, 5182, 5200, 5210, 5215, 5250, 6170, D4414, D4414-3, D14414T, D4818-2, DM4415, DM5219, DO4814, DO4818-3, DO4818T Mow`n Machine	**92-150**		15	1/2			2.50/.203	5/16	1-1/4	
Gator® G3™	**96-343**	70062KT 72896KT	15	1/2			2.50/.203	5/16	1	Xtended G3
Gator G6®	**396-713**		15	1/2			3.00/.250	5/16	1	Heavy-Duty High-Lift Xtended Fusion® G6
(3) for 52" cut, (2) 91-558 & (1) 91-557 for 48" cut	**91-558**	70104KT 72897KT	**18**	1/2			2.50/.250	5/16	3/4	
(3) for 52" cut, contour blade	**91-535**	70117KT 72896KT	18	1/2			2.50/.250	5/16	1-3/16	
(3) for 52" cut, (2) 91-532 & (1) 91-536 for 48" cut, high-lift	**91-532**		18	1/2			2.50/.250	5/16	1	
(3) for 52" cut, mulching	**91-538**	72505KT 72904KT	18	1/2			2.50/.203	0	1	

GROUP CONTINUES

B

Blades - OEM Replacements

Woods

	OREGON	OEM No.	Length	Center	Outer	C to C	W / T	Off	Lift	Prod. Code
			GROUP CONTINUES							
Gator G3	**96-329**		18	1/2			2.50/.203	5/16	1	G3
Gator G5™	**596-329**		18	1/2			3.00/.203	5/16	1	High-Lift Xtended Fusion® G5
Gator G6	**396-729**		18	1/2			3.00/.250	5/16	1	Heavy-Duty High-Lift Xtended Fusion® G6
(3) for 60" cut, left-hand cut, fits models RM500, F35, RM59	**91-761**	23825 23825KT 31359 31359KT	**20-3/16**	5/8			2.00/.203	13/16	3/4	
(3) for 60" cut, medium lift, model 59C2	**91-762**	6950 6950KT	20-3/16	5/8			2.00/.203	13/16	11/16	
(3) for 60" cut	**92-159**	08899100CKT	**20-1/2**	5/8			2.50/.250	5/16	1-1/8	
Gator® G5™	**596-815**	09246600CKT	20-1/2	5/8			3.00/.203	5/16	1	High-Lift Xtended Fusion® G5
Gator G6®	**396-807**		20-1/2	5/8			3.00/.250	5/16	1	Heavy-Duty High-Lift Xtended Fusion® G6
	91-584	1001513 1001513KT	**20-15/16**	1	1/2	5	2.50/.250	7/16	1	
(3) for 61" cut, (2) for 41" cut	**91-531**		**21**	1/2			2.50/.250	5/16	1	
(3) for 61" cut, (2) for 41" cut, high-lift	**91-534**	70142KT	21	1/2			2.50/.250	5/16	1-3/16	
(3) for 61" cut, (2) for 41" cut, extreme high-lift	**91-537**		21	1/2			3.00/.250	5/16	1-1/4	

GROUP CONTINUES

Woods

	OREGON	OEM No.	Length	Center	Outer	C to C	W / T	Off	Lift	Prod. Code
GROUP CONTINUES										
(3) for 61" cut, (2) for 41" cut, low-lift	**91-547**	70134 70134KT	21	1/2			2.50/.250	5/16	3/4	
(3) for 61" cut, (2) for 41" cut, mulching	**91-539**	72517KT	21	1/2			2.50/.203	0	1	
Gator G3™	**96-346**		21	1/2			2.50/.203	5/16	1	G3
Gator G5	**596-346**		21	1/2			3.00/.203	5/16	1	High-Lift Xtended Fusion® G5
Gator G6	**396-712**		21	1/2			3.00/.250	5/16	1	Heavy-Duty High-Lift Xtended Fusion® G6
(3) for 72" cut, left-hand cut, fits models L306, RM306, RM600	**91-764**	13404 13404KT 31306 31306KT	**24-7/16**	1			2.50/.203	3/4	1-3/16	
(3) for 72" cut	**91-766**	15127 15127CKT 15127KT 65172	**24-5/8**	5/8			2.50/.250	0	7/8	Xtended
(3) for 72" cut, PRD7200, RD72, RD7200, RD7200-2	**91-585**	10081899KT2 1008199 1008199KT	**24-15/16**	1	1/2	5	2.50/.250	3/8	1	
Gator® G5™	**591-585**		24-15/16	1	1/2	5	3.00/.203	3/8	1	High-Lift Xtended Fusion® G5

Wright Stander

(3) for 48" cut, (2) for 32" cut, Sentar2, Sentar3, Sentar Sport, Stander	**91-620**	71440002	**16-1/2**	5/8			2.50/.203	0	1	Xtended
(3) for 48" cut, (2) for 32" cut, high-lift, Sentar2, Sentar3, Sentar Sport, Stander	**91-621**		16-1/2	5/8			3.00/.203	0	1-1/2	
(3) for 48" cut, (2) for 32" cut, low-lift, Sentar2, Sentar3, Sentar Sport, Stander	**92-207**		16-1/2	5/8			2.50/.203	0	13/16	Xtended

GROUP CONTINUES

B

Blades - OEM Replacements

Wright Stander

	OREGON	OEM No.	Length	Center	Outer	C to C	W / T	Off	Lift	Prod. Code
			GROUP CONTINUES							
(3) for 48" cut, (2) for 32" cut, mulching, Sentar2, Sentar3, Sentar Sport, Stander	**92-743**		16-1/2	5/8			2.50/.203	0	1	
							Xtended			
(3) for 48" cut, (2) for 32" cut, Sentar2, Sentar3, Sentar Sport, Stander	**92-036**		16-1/2	5/8			2.50/.250	0	1	
(3) for 48" cut, (2) for 32" cut, Sentar2, Sentar3, Sentar Sport, Stander	**92-145**		16-1/2	5/8			2.50/.203	0	1	
(3) for 48" cut, (2) for 32" cut, Sentar2, Sentar3, Sentar Sport, Stander	**92-737**		16-1/2	5/8			2.50/.203	0	1-1/16	
							Xtended			
(3) for 48" cut, (2) for 32" cut, Sentar2, Sentar3, Sentar Sport, Stander	**99-126**		16-1/2	5/8			2.50/.203	0	1-1/16	
Gator® G3™	**96-308**		16-1/2	5/8			2.50/.203	0	1	G3
Gator G5™	**596-308**		16-1/2	5/8			3.00/.203	0	1	
							High-Lift Xtended Fusion®			G5
Gator G6®	**396-735**		16-1/2	5/8			3.00/.250	0	1	
							Heavy-Duty High-Lift Xtended Fusion®			G6
(3) for 48" cut, Sport X, Stander X	**92-165**	71440004 71440008	**16-1/2**	5/8			2.50/.203	1/2	1	
							Xtended			
Gator G6	**392-165**		16-1/2	5/8			3.00/.250	1/2	1	
							Heavy-Duty High-Lift Xtended Fusion®			G6
(2) for 36" cut, (3) for 52" cut	**91-622**	71440001	**18**	5/8			2.50/.203	0	1	
							Xtended			
(2) for 36" cut, (3) for 52" cut, high-lift	**91-623**		18	5/8			3.00/.203	0	1-1/2	
							Xtended			
			GROUP CONTINUES							

B

Wright Stander

	OREGON	OEM No.	Length	Center	Outer	C to C	W / T	Off	Lift	Prod. Code
			GROUP CONTINUES							
(2) for 36" cut, (3) for 52" cut, low-lift	91-235		18	5/8			2.50/.250	0	7/8	Xtended
(2) for 36" cut, (3) for 52" cut, mulcher	91-335		18	5/8			2.50/.203	0	1	Xtended
(2) for 36" cut, (3) for 52" cut, mulcher	91-218		18	5/8			2.50/.164	0	1	Xtended
(2) for 36" cut, (3) for 52" cut	91-181		18	5/8			2.50/.187	0	1	Xtended
(2) for 36" cut, (3) for 52" cut	91-184		18	5/8			2.50/.250	0	1	Xtended
(2) for 36" cut, (3) for 52" cut	91-256		18	5/8			2.50/.203	0	1	Xtended
(2) for 36" cut, (3) for 52" cut	91-312		18	5/8			2.50/.203	0	1	Xtended
(2) for 36" cut, (3) for 52" cut	91-637		18	5/8			2.50/.203	0	1	
(2) for 36" cut, (3) for 52" cut	94-053		18	5/8			2.50/.250	0	1	
Gator® G3™	96-344		18	5/8			2.50/.203	0	3/4	G3
Gator G5™	596-344		18	5/8			3.00/.203	0	1	High-Lift Xtended Fusion® G5
Gator G6®	396-726		18	5/8			3.00/.250	0	1	Heavy-Duty High-Lift Xtended Fusion® G6
(3) for 52" cut, StanderX, SportX	91-039	71440005 71440009	18	5/8			2.50/.203	1/2	1	
(3) for 52" cut, high-lift, StanderX, SportX	93-010		18	5/8			2.50/.203	1/2	1-1/8	Xtended
			GROUP CONTINUES							

B

Blades - OEM Replacements

Wright Stander

GROUP CONTINUES

	OREGON	OEM No.	Length	Center	Outer	C to C	W / T	Off	Lift	Prod. Code
Gator G3	93-601		18	5/8			2.50/.203	1/2	3/4	G3
Gator G5	593-601		18	5/8			3.00/.203	1/2	1	High-Lift Xtended Fusion® G5
Gator G6	393-601		18	5/8			3.00/.250	1/2	1	Heavy-Duty High-Lift Xtended Fusion® G6
(3) for 61" cut, (2) for 42" cut, all models	91-626	71440003	**21**	5/8			2.50/.203	0	1	
(3) for 61" cut, (2) for 42" cut, mulching, all models	91-596		21	5/8			2.50/.203	0	1	
Gator® G3™	96-347		21	5/8			2.50/.203	0	3/4	G3
Gator G5™	596-347		21	5/8			3.00/.203	0	1	High-Lift Xtended Fusion® G5
Gator G6®	396-727		21	5/8			3.00/.250	0	1	Heavy-Duty High-Lift Xtended Fusion® G6
(3) for 61" cut, Sport X, Stander X	91-135	71440007 71440010	**21**	5/8			2.50/.203	1/2	1	
(3) for 61" cut, high-lift Sport X, Stander X	93-011		21	5/8			2.50/.250	1/2	1-1/8	Xtended
(3) for 61" cut, low-lift Sport X, Stander X	93-013		21	5/8			2.50/.250	1/2	5/8	Xtended
Gator G3	96-702		21	5/8			2.50/.203	1/2	1	G3
Gator G5	596-702		21	5/8			3.00/.203	1/2	1	High-Lift Xtended Fusion® G5
Gator G6	396-702		21	5/8			3.00/.250	1/2	1	Heavy-Duty High-Lift Xtended Fusion® G6

B

Zipper

	OREGON	OEM No.	Length	Center	Outer	C to C	W / T	Off	Lift	Prod. Code
(3) for 64" cut	**91-598**	10090295	**22-3/16**	1/2			2.50/.250	0	1	
Gator G6	**391-598**	1009049-5 1009068-5	22-3/16	1/2			3.00/.250	0	1	Heavy-Duty High-Lift Xtended Fusion® G6
(3) for 74" cut	**91-034**		**25**	1/2			2.25/.250	0	1	
(3) for 74" cut, mulching	**92-164**		25	1/2			2.50/.203	0	1	
Gator G6®	**396-737**	10090525 10090545 10090575	25	1/2			3.00/.250	0	1	Heavy-Duty High-Lift Xtended Fusion® G6

B

Blade Edgers

Ariens

	OREGON	OEM No.	Length	Center	Type**	Design*	Width	Thickness	Product Code
	40-130	03789800	9	1/2	NS	SC	2	.090	
		Fits model: 986101, 986103, & 986501							

Black+Decker

	40-121	82-024	7-5/8	7/16	NS	SC	1-1/2	.090	
		Fits model: 8224							
	40-519	243801-00 243797-00	7-3/4	1/2	NS	-	2-3/4	.090	
		Fits model: E750 Edge Hog							

Earth Quake & Powermate

	40-110	400009	9	1/2 x 7/16	NS	SC	2	.090	
		Fits models: PWLE0799, PWLE1639							

Echo

	40-139		8	1	NS	SC	2	.120	
		Economy							
	40-140	720237001 69601552632	8	1	NS	SC	2	.090	
		Fits models: PAS-225, PAS-230, PAS-266, PAS-280, PE-200, PE-2000, PE-201, PE-2201, PE-225, PE-230, PE-231, PE-2400, PE-260, PE-2601, PE-261, PE-265, PE-265S, PE-266, PE-266S, PE-280, PE-3100, PE-311, PE-2620							
	40-141	69601552631	8	1	NS	SC	2	.120	
	40-147	69601553630	8	1	NS	SC	2	.187	

Homelite

	40-142	D04359 D04359A UP06765	9	1	NS	SC	2	.090	
		Fits models: PSE3000, E200, BC2500AZSB, BC900, C300, EA250, F2040, ST725, D825CA, xpand-It, Expand-It Plus, Expand-It 3-in-1							

**Types

NS	Not Sharpened
S2	Sharpened, 2-sides
S4	Sharpened, 4-sides

*Designs

AC	Angle Cut Edge
RE3T	Rounded Edges, 3-teeth
SC	Straight Cut Edge

Note: All edger blades are heat treated to provide maximum life and durability (except 40-139).

B

	OREGON	OEM No.	Length	Center	Type**	Design*	Width	Thickness	Product Code
Husqvarna									
	40-141	503848202 531004044 505175301 531300233	8	1	NS	SC	2	.120	
		Fits models: 123L, 125E, 125LD, 225E, 225LD, 225RD, 232L, 232RBD, 233RBD, 240RBD, 322E, 322E, 323E, 323EX, 325E, 325EX, 326E, 326ES, 326EX, 327ES, 426EX, 525ES							
	40-502	505289963	9	1/2	S2	SC	2	.149	
		Fits model: LE475							
	40-411	601001974 601002454	9	5/8	S4	AC	2	.120	
		Fits models: LE359, LE309							
Jacobsen									
	40-807	309444	9	1/2	NS		9	.090	
		Outside hole dia.: 5/16, center to center: 3-1/4 c-c, 8-tooth round							
John Deere									
	40-502	M47147	9	1/2	S2	SC	2	.149	
		Fits models: #2, #3, 3K, and E35 edgers							
Kawasaki									
	40-141	59074-2053A 59074-2053	8	1	NS	SC	2	.120	
		Fits models: HE026A, HE027A, KEL27B, KEL27BC, KME01A							
Lawn Boy									
	40-502	603687	9	1/2	S2	SC	2	.149	
Lesco									
	40-141	73974	8	1	NS	SC	2	.120	
Little Wonder									
	40-409	129	10	1/2	S4	SC	2	.120	
		Fits models: 5001, 5002, 6001, 6002, 6031, 6032, 6001IC, 6001K, 6002IC, 6002K, 6031IC, 6031K, 6032IC, 6032K, 6033							

**Types	
NS	Not Sharpened
S2	Sharpened, 2-sides
S4	Sharpened, 4-sides

*Designs	
AC	Angle Cut Edge
RE3T	Rounded Edges, 3-teeth
SC	Straight Cut Edge

Note: **All edger blades are heat treated to provide maximum life and durability (except 40-139).**

B

Blade Edgers

McCulloch

	OREGON	OEM No.	Length	Center	Type**	Design*	Width	Thickness	Product Code
	40-144	301272 301272-00	7-3/4	1	NS	SC	2	.120	
		Fits models: ELE80, Titan 2380, MAC328, Promac (2320L, 2335I, 2635B, GLE2600)							

McLane

	40-130	2059	9	1/2	NS	SC	2	.090	
		Fits model: 100-series							
	40-131	2059-10	10	1/2	NS	SC	2	.090	
		Fits models: 200 & 300 series							
	40-502	2059HD	9	1/2	S2	SC	2	.149	

Maruyama

	40-141	69601552631 216062 840084	8	1	NS	SC	2	.120	
		Fits models: ED2321, ED2621, E27, E30S							

MTD

	40-316	781-0080 781-0080-0637 787-01503	9	5/8	NS	RE3T	2-1/2	.090	
		Fits models: 500-600 series edgers							
	40-141	791-613223B 791-613223	8	1	NS	SC	2	.120	
		Fits models: LE720, LE720R, CL25LE, 725RE, 770REB, 720REB, 41ADZ2CC799, 41AJLE-C799, 41BJLE-C799, 720r DE							
	40-009	781-0748 781-0748-0637	9	5/8	NS	RE3T	9	.090	

Power Trim

	40-130	-	9	1/2	NS	SC	2	.090	
		Fits model: 100-series							
	40-131	310	10	1/2	NS	SC	2	.090	
		Fits models: 150, 200, 200-4, 200-8, 200-H, 208-H, 208-V, 300-IC, 308-IC, 300-H, 308-H							
	40-132	-	12	1/2	NS	SC	2	.090	
		Golf course application							

**Types	
NS	Not Sharpened
S2	Sharpened, 2-sides
S4	Sharpened, 4-sides

*Designs	
AC	Angle Cut Edge
RE3T	Rounded Edges, 3-teeth
SC	Straight Cut Edge

Note: All edger blades are heat treated to provide maximum life and durability (except 40-139).

B

Red Max

	OREGON	OEM No.	Length	Center	Type**	Design*	Width	Thickness	Product Code
	40-140	6367-15110 521453001 180064 Z6367-15110 505175301 613223	8	1	NS	SC	2	.090	
		Fits models: EXZ2460S, HE2200LDC, HE2600, HE261, HEZ2460F, HEZ2460S, HEZ2601S, HEZ2610F, HEZ2650F, HEZ3060E, HEZ3060S							

Ryobi

	40-143	613223 791-613223 791-613223B	7-3/4	1	NS	SC	2	.149	
		Fits models: 130ER, 720ER, 720R, 725RE, 770REB, LE720R, LE720TP							

Sears / Craftsman

	40-845		9	5/8	NS	-	9	.090	
		Curvature of blade prevents clogging							
	40-402	740297 740297MA 85755MA	9	1/2	S4	S2	2	.120	
		Fits models: EV3550 and EV3850							
	40-951	85757	7-1/8	1/4	NS	SC	1-1/2	.062	
		Includes locking plate							

Shindaiwa

	40-141	69601552631 69601552630 69601552632 99909-0020	8	1	NS	SC	2	.120	
		Fits models: 80544, LE230, LE231, LE242, LE250, LE2510, LE254, LE260, LE261, LHE2475							

Stihl

	40-144	301272	7-3/4	1	NS	SC	2	.120	
	40-141	4133 713 4101 4133 713 4102	8	1	NS	SC	2	.120	
		Fits models: All FC models							

**Types		*Designs	
NS	Not Sharpened	**AC**	Angle Cut Edge
S2	Sharpened, 2-sides	**RE3T**	Rounded Edges, 3-teeth
S4	Sharpened, 4-sides	**SC**	Straight Cut Edge

Note: **All edger blades are heat treated to provide maximum life and durability (except 40-139).**

B

Blade Edgers

Tanaka

	OREGON	OEM No.	Length	Center	Type**	Design*	Width	Thickness	Product Code
	40-503	43533110200 6690192	10	1/2	S2	SC	2	.149	
		Fits models: TLE-500, TLE-550, TLE-600, 550 edger							
	40-141	6690193 4353729020 301272 323619	8	1	NS	SC	2	.120	
		Fits models: TPE-250, TPE-2501, TPE-250PF, TPR-2510, TPE-260PF, TPE-270PF, TPE-270PN, TBC-255SKF, TBC-SF							

Troy-Bilt

	40-004	753-06561 781-0080-0637	9	5/8	NS	SC	2	.090	
		Fits model: TB516EC							
	40-143	613223 791-613223 791-613223B	7-3/4	1	NS	SC	2	.149	
	40-009	781-0748 781-0748-0637	9	5/8	NS	RE3T	9	.090	
		Fits model: TB554							

Weedeater

	40-010	952701674	8-3/4	9/16-D	NS	SC	1-1/2	.090	

Star Edger Blades

OREGON	Center Length	Hole	**Type	*Design	Width	Thickness	Product Code
40-840	8 circular	1	NS	--	8	.090	
40-843	9 circular	1/2	NS	--	9	.090	
40-845	9 circular	5/8	NS	--	9	.090	

Curvature of blade prevents clogging

Stick Edger Blades

OREGON	Description	Center Length	Hole	**Type	*Design	Width	Thickness	Product Code
40-002	Magnum	8	1	NS	SC	2	.090	
40-140		8	1	NS	SC	2	.090	
40-141		8	1	NS	SC	2	.120	
40-139	Economy	8	1	NS	SC	2	.120	
40-147		8	1	NS	SC	2	.187	

**Types	
NS	Not Sharpened
S2	Sharpened, 2-sides
S4	Sharpened, 4-sides

*Designs	
AC	Angle Cut Edge
RE3T	Rounded Edges, 3-teeth
SC	Straight Cut Edge

Note: All edger blades are heat treated to provide maximum life and durability (except 40-139).

Angle-Beveled Edger Blades

OREGON	Length	Center Hole	**Type	*Design	Width	Thickness	Product Code
40-408	9	3/8	S4	AC	2	.120	
40-402	9	1/2	S4	AC	2	.120	
40-411	9	5/8	S4	AC	2	.120	
40-403	10	1/2	S4	AC	2	.120	

Magnum Edger™ Blades

OREGON	Length	Center Hole	**Type	*Design	Width	Thickness	Product Code
40-002	8	1	NS	SC	2	.090	
40-004	9	5/8	NS	SC	2	.090	

Heavy-Duty Edger Blades

OREGON	Length	Center Hole	**Type	*Design	Width	Thickness	Product Code
40-502	9	1/2	S2	SC	2	.149	
40-514	9	5/8	S2	SC	2	.149	
40-503	10	1/2	S2	SC	2	.149	
40-518	10	5/8	S2	SC	2	.149	

Edger Blades by Length

OREGON	Length	Center Hole	**Type	*Design	Width	Thickness
40-951	7-1/8	1/4	NS	SC	1-1/2	0.062
40-121	7-5/8	7/16	NS	SC	1-1/2	0.090
40-144	7-3/4	1	NS	SC	2	0.120
40-143	7-3/4	1	NS	SC	2	0.149
40-140	8	1	NS	SC	2	0.090
40-840	8	1	NS	—	8	0.090
40-002	8	1	NS	SC	2	0.090
40-141	8	1	NS	SC	2	0.120
40-139	8	1	NS	SC	2	0.120
40-147	8	1	NS	SC	2	0.187
40-010	8-3/4	9/16 D	NS	SC	1-1/2	0.090
40-408	9	3/8	S4	AC	2	0.120
40-130	9	1/2	NS	SC	2	0.090
40-807	9	1/2	NS	—	9	0.090
40-843	9	1/2	NS	—	9	0.090
40-402	9	1/2	S4	AC	2	0.120
40-502	9	1/2	S2	SC	2	0.149
40-004	9	5/8	NS	SC	2	0.090
40-316	9	5/8	NS	RE3T	2-1/2	0.090
40-009	9	5/8	NS	RE3T	9	0.090
40-845	9	5/8	NS	—	9	0.090
40-411	9	5/8	S4	AC	2	0.120
40-514	9	5/8	S2	SC	2	0.149
40-142	9	1	NS	SC	2	0.090
40-131	10	1/2	NS	SC	2	0.090
40-403	10	1/2	S4	AC	2	0.120
40-409	10	1/2	S4	SC	2	0.120
40-503	10	1/2	S2	SC	2	0.149
40-518	10	5/8	S2	SC	2	0.149
40-132	12	1/2	NS	SC	2	0.090

**Types	
NS	Not Sharpened
S2	Sharpened, 2-sides
S4	Sharpened, 4-sides

*Designs	
AC	Angle Cut Edge
RE3T	Rounded Edges, 3-teeth
SC	Straight Cut Edge

Note: **All edger blades are heat treated to provide maximum life and durability (except 40-139).**

B

Blade Edgers

OREGON	Replaces	Description	Product Code

Bluebird

40-707
Bluebird 5201
Bluebird 539005201
Billy Goat 350205

Flail Set - 52 pc. set
For thatcher aerators
3-1/2" x 1" x 1/8" material
Hole diameter: .530"
Priced as a set

Fits models: 120B, F20B, C18

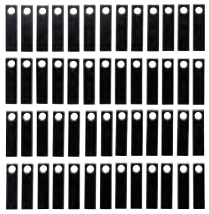

41-008
Bluebird 5002

Power Rake Shaft
Set of 4 with c-clips
Priced as a set
Diameter: 1/2", length between c-clips: 8-7/8"

41-899
Bluebird 108111

Power Rake Shaft
Set of 4 with c-clips
Fits PR22
Priced as a set
Diameter: 1/2", length between c-clips: 10-11/16"

89-001
Bluebird 0522361
Bluebird 7190
Bobcat 2701410
Bobcat 522361
Classen 100032
Exmark 121-4894
Ryan 2701410
Ryan 522361
Toro 121-4894
Toro T7112

Aerator Tine
1/2" closed spoon

Exmark

40-703
Exmark 1-503031
Encore 253027

Flail Set - 52 pc. set
4-1/4" x 1" x 1/8" material
Hole diameter: .540"
Priced as a set

EZ Rake

43-025
E-Z Rake 91010

Dethatcher Spring
Complete with plastic sleeve

B

Hydro oil level should not
exceed 1" cold
use S.A.E. 20W-20
KAWASAKI

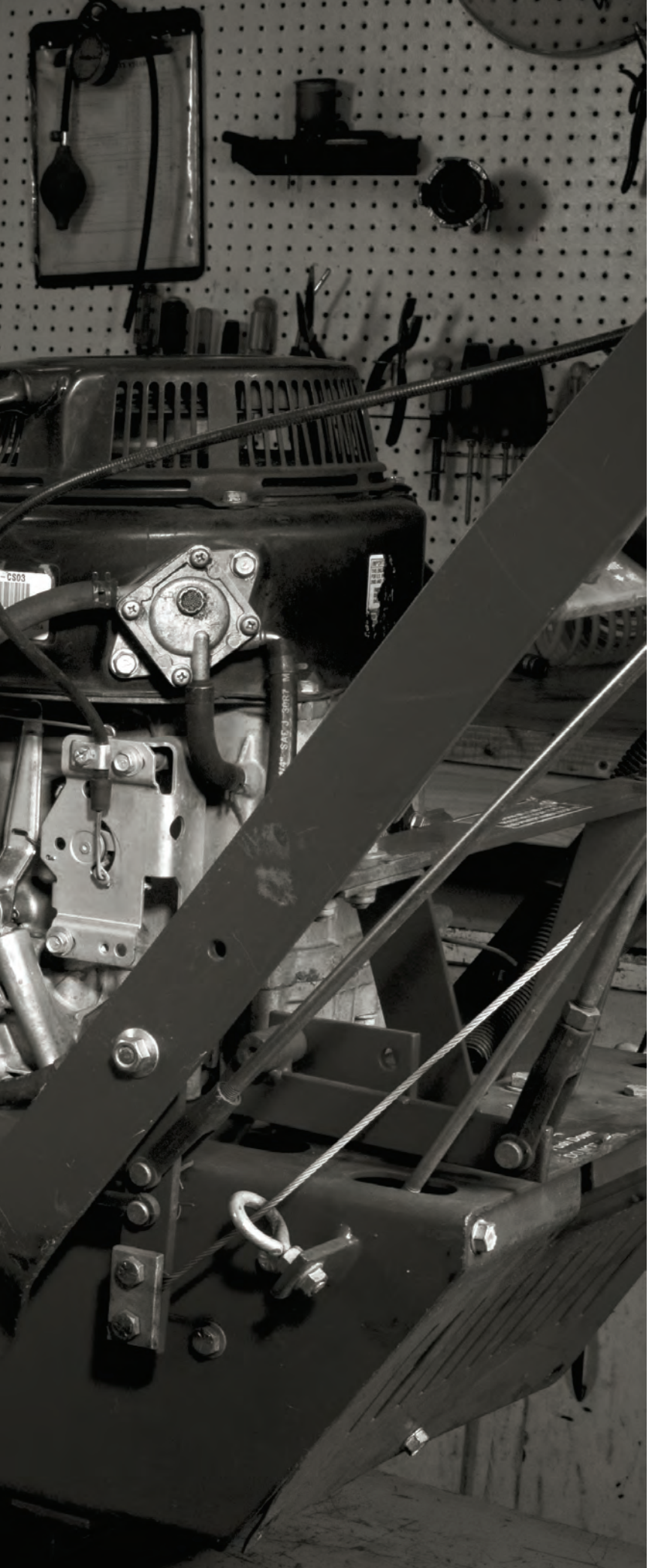

SECTIONS C–N

Carburetor Parts . . . . . LG 592–674

Centrifugal Clutches . . . . . LG 675

Chain Roller Parts . . . . . LG 676

Chainsaw & Cut-Off Saw Parts . . . LG 677–693

Commercial Parts . . . . . LG 694–698

Control Cables . . . . . LG 699–723

Drive Parts. . . . . LG 724–728

Electrical Parts . . . . . LG 729–744

Engine Parts . . . . . LG 745–760

Fuel Line & Accessories. . . . . LG 761–780

Grass Bags . . . . . LG 781–782

Hedgetrimmer Parts . . . . . LG 783

Ignition Parts . . . . . LG 784–791

LInkage, Jacks, & Hardware . . . . LG 792–801

Miscellaneous Parts. . . . . LG 802–805

Mufflers . . . . . LG 806–811

Carburetor Parts

Tecumseh to Oregon® Carburetor Replacement Chart

Tecumseh No.	OREGON No.	Carb Kit No.	Float No.	Inlet No.
631612	50-650	49-428	49-242	49-244
631831	50-650	49-428	49-242	49-244
631902	50-650	49-428	49-242	49-244
632046	50-650	49-428	49-242	49-244
632050	50-650	49-428	49-242	49-244
632051	50-650	49-428	49-242	49-244
632052	50-650	49-428	49-242	49-244
632053	50-650	49-428	49-242	49-244
632055	50-650	49-428	49-242	49-244
632070	50-650	49-428	49-242	49-244
632078	50-650	49-428	49-242	49-244
632086	50-650	49-428	49-242	49-244
632087	50-650	49-428	49-242	49-244
632088	50-650	49-428	49-242	49-244
632098	50-650	49-428	49-242	49-244
632110	50-663	49-436	49-242	49-244
632113	50-662	49-436	49-242	49-244
632113A	50-662	49-436	49-242	49-244
632214	50-650	49-428	49-242	49-244
632230	50-646	49-425	49-242	49-244
632272	50-646	49-425	49-242	49-244
632334A	50-642	49-422	49-242	49-244
632349	50-650	49-428	49-242	49-244
632370	50-663	49-436	49-242	49-244
632370A	50-663	49-436	49-242	49-244
632380	50-650	49-428	49-242	49-244
632387	50-650	49-428	49-242	49-244
632388	50-650	49-428	49-242	49-244
632389	50-650	49-428	49-242	49-244
632391	50-650	49-428	49-242	49-244
632420	50-650	49-428	49-242	49-244
632466	50-650	49-428	49-242	49-244
632467	50-650	49-428	49-242	49-244
632468	50-650	49-428	49-242	49-244
632575	50-650	49-428	49-242	49-244
632610	50-650	49-428	49-242	49-244
632611	50-650	49-428	49-242	49-244
632614	50-649	49-427	49-243	–
632615	50-647	49-426	49-242	49-244
632635	50-650	49-428	49-242	49-244
632644	50-650	49-428	49-242	49-244
632645	50-650	49-428	49-242	49-244
632646	50-650	49-428	49-242	49-244
632669	50-650	49-428	49-242	49-244
632670	50-650	49-428	49-242	49-244
632671A	50-649	49-427	49-243	–
632671B	50-649	49-427	49-243	–
632671C	50-649	49-427	49-243	–
632678	50-650	49-428	49-242	49-244
632681	50-650	49-428	49-242	49-244
632733	50-650	49-428	49-242	49-244
632744	50-650	49-428	49-242	49-244
632747	50-650	49-428	49-242	49-244
632750	50-650	49-428	49-242	49-244
632769	50-650	49-428	49-242	49-244

Tecumseh No.	OREGON No.	Carb Kit No.	Float No.	Inlet No.
632772	50-650	49-428	49-242	49-244
632795	50-650	49-428	49-242	49-244
632795A	50-650	49-428	49-242	49-244
633014	50-650	49-428	49-242	49-244
640004	50-653	49-431	49-242	49-244
640014	50-653	49-431	49-242	49-244
640017B	50-651	49-429	49-242	49-244
640020	50-652	49-430	49-243	–
640020A	50-652	49-430	49-243	–
640020B	50-652	49-430	49-243	–
640023	50-655	49-433	49-242	49-244
640025	50-653	49-431	49-242	49-244
640025A	50-653	49-431	49-242	49-244
640025B	50-653	49-431	49-242	49-244
640025C	50-653	49-431	49-242	49-244
640034A	50-641	49-421	49-243	–
640051	50-655	49-433	49-242	49-244
640052	50-659	49-436	49-242	49-244
640054	50-659	49-436	49-242	49-244
640060	50-664	49-436	49-242	49-244
640060A	50-664	49-436	49-242	49-244
640065	50-654	49-432	49-243	–
640065A	50-654	49-432	49-243	–
640072	50-641	49-421	49-243	–
640072A	50-641	49-421	49-243	–
640084B	50-640	49-420	49-242	49-244
640140	50-655	49-433	49-242	49-244
640152A	50-655	49-433	49-242	49-244
640159	50-641	49-421	49-243	–
640222	50-664	49-436	49-242	49-244
640222A	50-664	49-436	49-242	49-244
640260	50-656	49-434	49-242	49-244
640260A	50-656	49-434	49-242	49-244
640260B	50-656	49-434	49-242	49-244
640262A	50-644	49-424	49-242	49-244
640278A	50-661	49-431	49-242	49-244
640298	50-666	49-436	49-242	49-244
640305	50-665	49-436	49-242	49-244
640306	50-664	49-436	49-242	49-244
640306A	50-664	49-436	49-242	49-244
640330	50-641	49-421	49-243	–
640330A	50-641	49-421	49-243	–
640340	50-664	49-436	49-242	49-244
640346	50-665	49-436	49-242	49-244
640347	–	49-436	49-242	49-244
640347	50-667 **	49-436	49-242	49-244
640349	50-659	49-436	49-242	49-244
640350	50-643	49-423	49-242	49-244

* Applications without air vane
** Applications with air vane

C

Tecumseh Manufacturing Number to Oregon® Number

Tecumseh MFG No.	OREGON
226	50-650
339	50-650
386	50-650
418	50-650
419	50-650
422	50-650
433	50-650
438	50-650
445	50-650
703	50-650
1010	50-650
1021	50-650
1022	50-650
1034	50-650
1035	50-650
1036	50-650
1056	50-650
1059	50-650
1060	50-650
1099	50-642

Tecumseh MFG No.	OREGON
1107	50-646
1126	50-650
1135	50-647
1137	50-650
1159	50-646
1277	50-650
1278	50-650
1279	50-650
1427	50-662
1432	50-642
1433	50-663
1471	50-647
1474	50-650
1483	50-647
1499	50-650
1500	50-650
1529	50-650
1538	50-649
1548	50-650
1549	50-650

Tecumseh MFG No.	OREGON
1550	50-650
1552	50-650
1554	50-650
1555	50-650
1558	50-650
1604	50-650
1610	50-650
1619	50-650
1623	50-650
1650	50-650
1652	50-650
1670	50-649
5001	50-655
5002	50-659
5005	50-652
5017	50-655
5017	50-665
5019	50-641
5023	50-651
5028	50-653

Tecumseh MFG No.	OREGON
5036	50-659
5041	50-664
5043	50-654
5044	50-653
5047	50-641
5048	50-651
5087	50-653
5097	50-655
5128	50-655
5143	50-664
5165	50-655
5185	50-664
5192	50-641
5194	50-641
5196	50-654
5199	50-656
5208	50-644
5211	50-644
5241	50-664
5243	50-653

Tecumseh MFG No.	OREGON
5246	50-665
5252	50-666
5274	50-641
5285	50-640
5294	50-664
5310	50-665
5312	–
5312	50-667**
5313	50-659
5333	50-653

* without air vane
** with air vane

Complete Carburetors

50-603 Walbro WYJ-192

Carburetor
Fits Echo SRM2601 brushcutter

50-607 Walbro WYL-19

Carburetor
Fits Shindaiwa S230 brushcutter

50-619 Zama C1U-K52
Echo 125200-13312
Zama C1U-K54
Echo 125200-49030

Carburetor
Fits Echo models SRM2100, GT2000, GT2100, ST2000SB, PAS, & PDSR

50-620 Zama C1U-K54
Echo 125200-13123

Carburetor
Fits Echo model TC2100

50-621 Zama RB-K66A
Echo A02100380

Carburetor
Rotary Barrel
Fits Echo models GT200, GT201, SRM200, SRM201, SRM230, SRM231, HC160, HC180, & HC200

C

Carburetor Parts

OREGON	Replaces	Description	Product Code	

Complete Carburetors

50-657	Briggs & Stratton 498170 Briggs & Stratton 497586	**Carburetor** For vertical-shaft models 120XXX, 121XXX, 122XXX, 12EXXX, & 12TXXX with primer system		
50-658	Briggs & Stratton 499059	**Carburetor** For vertical-shaft models 121XXX, 122XXX, 123XXX, & 125XXX with choke		
49-226	Robin 106-62516-00	**Carburetor** Fits EC10 engine		
49-227	Robin 226-62341-00	**Carburetor** Fits EC15 engine		
49-228	Robin 227-62333-00	**Carburetor** Fits EC50 engine		
50-635	Honda 16100-ZE6-W01 Code 5189725 Honda 16100-ZE6-W00	**Carburetor** Fits Honda model GXV120		
50-636	Honda 16100-ZE7-W21 Honda 16100-ZE7-W20 Code 517693	**Carburetor** Fits Honda model GXV160 with BE66C carburetor		
50-638	Honda 16100-ZH8-W51 Honda 16100-ZH8-W50 Code 5152491	**Carburetor** Fits Honda model GX160 with BE65B carburetor		

C

OREGON	Replaces	Description	Product Code

Complete Carburetors

50-634	Honda 16100-ZE2-W71 Honda 16100-ZE2-W70 Code 5222211	**Carburetor** Fits Honda model GX240 with BE70B carburetor	
49-915	Honda 16100-ZE3-V01 Code 5222120	**Carburetor** Fits Honda model GX340 with BE85B carburetor	
50-637	Honda 16100-ZF6-V01 Honda 16100-ZF6-V00 Code 5222211	**Carburetor** Fits Honda model GX390 with BE85B carburetor	
50-673	Honda 16100-ZH7-W51	**Carburetor** Fits GX120 engine with the BE60B/B carburetor	
50-668	Honda 16100-ZH8-W61	**Carburetor** Fits GX160 engine with the BE65C/B carburetor	
50-669	Honda 16100-ZH9-W21 Honda 16100-ZH9-W20	**Carburetor** Fits GX270 engine with the BE75B/C carburetor	
50-670	Honda 16100-ZL0-W51	**Carburetor** Fits GX200 engine with the BE64B/C carburetor	
50-674	Honda 16100-ZK9-R61	**Carburetor** Fits GX270 generator engines with electric start	

C

Carburetor Parts

OREGON	Replaces	Description	Product Code

Complete Carburetors

50-034	Kohler 14 853 49-S Kohler 14 853 36-S	**Carburetor** - NEW Fits Kohler XT650 & XT675	
50-640	Tecumseh 640084B	**Carburetor** Fits models HSK50, HSK40, & LH195SP Replaces MFG No. 5285	
50-641	Tecumseh 640330A Tecumseh 640159 Tecumseh 640072A Tecumseh 640072 Tecumseh 640034A	**Carburetor** Fits models OHV140, OHV170, OHV175, OHV180, & OV490 Includes fuel shutoff solenoid Replaces MFG No. 5274	
50-642	Tecumseh 632334A	**Carburetor** Fits models HM70, HM80, HMSK80, & HMSK90 Replaces MFG No. 1099 & 1432	
50-646	Tecumseh 632230 Tecumseh 632272	**Carburetor** Fits models H50, H60, & HH60 Replaces MFG No. 1107 & 1159	
50-647	Tecumseh 632615	**Carburetor** Fits models H30 & H35 Replaces MFG No. 1483, 1135, & 1471	
50-649	Tecumseh 632671C Tecumseh 632614 Tecumseh 632671A Tecumseh 632671B	**Carburetor** Fits VLV50, VLV60, & VLV126 Replaces MFG No. 1538 & 1670	

C

OREGON	Replaces	Description	Product Code

Complete Carburetors

50-650

Tecumseh 631612
Tecumseh 631831
Tecumseh 631902
Tecumseh 632046
Tecumseh 632050
Tecumseh 632051
Tecumseh 632052
Tecumseh 632053
Tecumseh 632055
Tecumseh 632070
Tecumseh 632078
Tecumseh 632086
Tecumseh 632087
Tecumseh 632088
Tecumseh 632098
Tecumseh 632214
Tecumseh 632349
Tecumseh 632380
Tecumseh 632387
Tecumseh 632388
Tecumseh 632389
Tecumseh 632391
Tecumseh 632420
Tecumseh 632466
Tecumseh 632467
Tecumseh 632468
Tecumseh 632575
Tecumseh 632610
Tecumseh 632611
Tecumseh 632635
Tecumseh 632644
Tecumseh 632645
Tecumseh 632646
Tecumseh 632669
Tecumseh 632670
Tecumseh 632678
Tecumseh 632681
Tecumseh 632733
Tecumseh 632744
Tecumseh 632747
Tecumseh 632750
Tecumseh 632769
Tecumseh 632772
Tecumseh 632795
Tecumseh 632795A
Tecumseh 633014

Carburetor
Fits models TVS90, TVS100, ECV100, TVS120, TVS105, TVS115, TVXL115, TVXL90, TNT120, LAV35, TVXL115, TVS75, TVXL105, LAV30, LAV50, & LAV40

Replaces MFG. No. 226, 339, 386, 418, 419, 422, 433, 438, 445, 703, 1056, 1010, 1021, 1022, 1036, 1034, 1035, 1137, 1126, 1278, 1279, 1474, 1499, 1500, 1529, 1555, 1550, 1548, 1604, 1619, 1650, 1652, 1059, 1060, 1277, 1552, 1549, 1554, 1558, 1610, & 1623

50-651

Tecumseh 640017
Tecumseh 640017A
Tecumseh 640017B

Carburetor
Fits models OHH45 & OHH50
Replaces MFG. No. 5023, 5048

50-652

Tecumseh 640020
Tecumseh 640020A
Tecumseh 640020B

Carburetor
Fits models VLV50, VLV55, VLV60, VLV66, & VLV126
Replaces MFG. No. 5005

50-653

Tecumseh 640004
Tecumseh 640014
Tecumseh 640025
Tecumseh 640025A
Tecumseh 640025B
Tecumseh 640025C

Carburetor
Fits models OHH55, OHH60, & OHH65
Replaces MFG. No. 5028, 5044, 5087, 5243, & 5333

50-654

Tecumseh 640065
Tecumseh 640065A

Carburetor
Fits models OHV110, OHV125, OHV130, OHV115, OHV120, OV358EA, & OVH135
Replaces MFG. No. 5043 & 5196

C

Carburetor Parts

OREGON	Replaces	Description	Product Code

Complete Carburetors

50-655
Tecumseh 640023
Tecumseh 640051
Tecumseh 640140
Tecumseh 640152A
Tecumseh 640152

Carburetor
Fits models HM80 & HM100
Replaces MFG. No. 5001, 5017, 5097, 5128, & 5165

50-656
Tecumseh 640260
Tecumseh 640260A
Tecumseh 640260B

Carburetor
Fits models HM80, HM90, HM100,
LH318XA, & LH358EA
Replaces MFG. No. 5199

50-661
Tecumseh 640278
640278A

Carburetor
Fits LEV115 & LEV120
Replaces MFG. No. 5202

50-659
Tecumseh 640349

Carburetor
Fits models HMSK90, LH318SA, & LH358SA
Replaces MFG. No. 5313, 5002, & 5036

50-667
Tecumseh 640347

Carburetor
Fits model TM049XA
Replaces MFG. No. 5312
For units with air vane attached to the throttle shaft

50-662
Tecumseh 632113A
Tecumseh 632113

Carburetor
Fits models HS40 & HSSK40
Replaces MFG. No. 1427

50-663
Tecumseh 632370A
Tecumseh 632370
Tecumseh 632110

Carburetor
Fits models HM100 & HMSK100
Replaces MFG. No. 1433

50-664
Tecumseh 640340
Tecumseh 640306A
Tecumseh 640306
Tecumseh 640222A
Tecumseh 640222
Tecumseh 640060A
Tecumseh 640060

Carburetor
Fits models OH195EA, OH195EP, OH195XA, OH195XP,
OHH50, OHH55, OHH60, & OHH65
Replaces MFG. No. 5041, 5143, 5185, 5241, & 5294

C

OREGON	Replaces	Description	Product Code

Complete Carburetors

50-665	Tecumseh 640346 Tecumseh 640305	**Carburetor** Fits models OH195EA, OH195EP, OH195XA,OH195XP, OHH50, OHH55, OHH60, & OHH65 Replaces MFG. No. 5246 & 5310	
50-666	Tecumseh 640298	**Carburetor** Fits OH195SA & OHSK70	
50-674	Yamakoyo 49-68	**Carburetor** Fits YK900 generator engines with electric start	

Carburetor Insulators – Honda

49-233	Honda 16211-ZE1-000	**Carburetor Insulator** Fits GX140 & GX160	
49-234	Honda 16211-ZE2-000	**Carburetor Insulator** Fits GX240 & GX270	
49-236	Honda 16211-ZE2-W00	**Carburetor Insulator** Fits GX340 & GX390	

C

Carburetor Parts

OREGON	Replaces	Description	Product Code

Carburetor Kits

49-868		**Carburetor Rebuild Kit** Fits Stihl model 038 with Bing carburetors	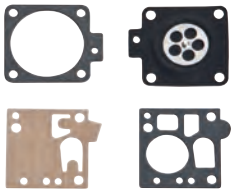
49-216	Briggs & Stratton 398992	**Carburetor Rebuild Kit** Fits 3 and 3.5 HP horizontal engines with two-piece Flo-jet carburetor	
49-991	Briggs & Stratton 398235	**Carburetor Rebuild Kit** Fits models 170400, 171400, 190400, 194400, & 195400 series For 7 HP and 8 HP engines after code 84100800	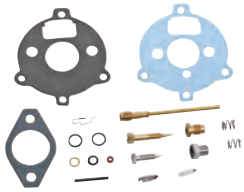
49-071	Briggs & Stratton 391071	**Carburetor Rebuild Kit** For older style 10-12, and 16 HP single cylinder engines Fits series 220400, 221400 & 222400 before code 81060200, 243400 after code 81101200, 302400, & 326400 before code 81090900	
49-693	Briggs & Stratton 394693	**Carburetor Rebuild Kit** For 7 – 9 HP horizontal float carburetor Fits model series 170400 (type 0500 thru 1999), 190400 (type 0010 thru 2100), 195400 (type 0600 thru 1999 & above 2100), 200500, & 233400 (type 0010 thru 0350)	
49-102	Briggs & Stratton 394698 Briggs & Stratton 299852	**Carburetor Rebuild Kit** For 6, 7, 8, 10, 11, and 12 HP vertical engines Fits 146700, 170700, 190700, 191700, 192700, 193700, 220700, 252700, 253700, 255700, 256700, 280700, & 281700 series with float carburetors	
49-101		**Carburetor Rebuild Kit** For Pulsa-jet carburetors on 3, 4, and 5 HP horizontal shaft engines and older 3 HP vertical-shaft engines Fits 80300, 100200, & 130200 series	
49-989	Briggs & Stratton 394989	**Carburetor Rebuild Kit** For 10, 11, and 16 HP horizontal single cylinder engines For model series 220400, 221400, & 222400 after code 81060100, 243400 after code 81101100, 254400, & 326400 after code 81090800	

C

OREGON	Replaces	Description	Product Code	

Carburetor Kits

49-145	Briggs & Stratton 494349 Briggs & Stratton 492072 Briggs & Stratton 398158	**Carburetor Rebuild Kit** Fits 130700 & 131700 series engines with Walbro LMS-3, 4, 10, and 19 carburetors		
49-078	Briggs & Stratton 495606	**Carburetor Rebuild Kit** Fits 100200, 112200, 130200 (type 0016), 131200, 132200, & 133200 For 3 – 5 HP horizontal engines with Pulsa-jet carburetors		
49-220	Briggs & Stratton 498116	**Carburetor Rebuild Kit** For Walbro carburetors on 28CID engines		
49-305	Briggs & Stratton 493762 Briggs & Stratton 498260 Briggs & Stratton 492495	**Carburetor Rebuild Kit** Fits 3 – 5 HP engines with Walbro-built carburetors 110700 & 121700 after date code 95110200, 123700, 126700, 135700, 12E700, & 12F700		
49-304	Briggs & Stratton 498261 Briggs & Stratton 490937 Briggs & Stratton 398183	**Carburetor Rebuild Kit** For engines with Walbro carburetor Fits 96000 & 97000 series engines		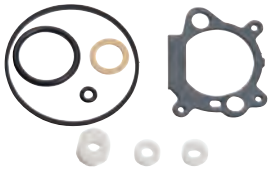
49-146	Briggs & Stratton 497481 Briggs & Stratton 496622	**Carburetor Rebuild Kit** Fits 282700, 283700, 286700, 28A700, 28B700, 28C700, 28D700, & 28M700 engines with Walbro LMT-63, 65, & 66 carburetors		
49-147	Briggs & Stratton 497535 Briggs & Stratton 494880 Briggs & Stratton 494384 Briggs & Stratton 495799	**Carburetor Rebuild Kit** Fits 194700, 195700, 196700, 197700, 198700, 283700, 284700, 289700, & 28M700 series engines with Walbro LMT-5, 37, & 77 carburetors		
49-148	Briggs & Stratton 497578	**Carburetor Rebuild Kit** Fits 19B400, 19C400, & 19K400 series engines		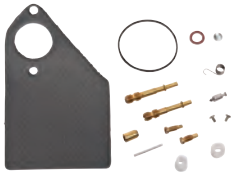

C

Carburetor Parts

OREGON	Replaces	Description	Product Code

Carburetor Kits

49-221	Briggs & Stratton 499220	**Carburetor Rebuild Kit** Fits Walbro carburetors on 28CID engines	
49-222	Briggs & Stratton 690191	**Carburetor Rebuild Kit** Fits Walbro carburetors on 28CID engines	
49-223	Briggs & Stratton 692703 Briggs & Stratton 499685 Briggs & Stratton 698185 Briggs & Stratton 792385	**Carburetor Rebuild Kit** Fits Walbro carburetors on 11CID vertical-shaft engines	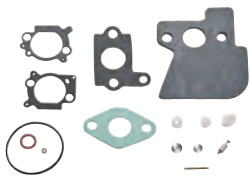
49-149	Briggs & Stratton 693503	**Carburetor Rebuild Kit** Fits 422400, 422700, 42A700, 42B700, 42D700, & 42E700 series engines with four-screw mount fuel pump carburetors	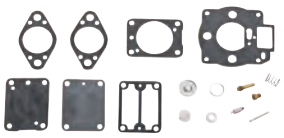
49-225	Briggs & Stratton 695157 Briggs & Stratton 690032	**Carburetor Rebuild Kit** Fits Walbro carburetors on 11CID horizonatal shaft engines	
49-070	Briggs & Stratton 694056 Briggs & Stratton 394502 Briggs & Stratton 491539	**Carburetor Rebuild Kit** Fits twin cylinder 16 thru 18 HP L head engines, models 400400 thru 422700, 42D700, 42A700, 460700, & 461700 Used on three-screw, fuel pump mount carburetors	
49-329	Cub Cadet 951-12760A Cub Cadet 951-11332A Cub Cadet 951-11332 Cub Cadet 751-12760A Cub Cadet 751-11332A Cub Cadet 751-11332	**Carburetor Kit** Fits 31A model series snow throwers with 483-SUB engines (2008–2014)	
49-331	Cub Cadet 951-12762A Cub Cadet 951-11219A Cub Cadet 951-11219 Cub Cadet 751-12762A Cub Cadet 751-11219A Cub Cadet 751-11219	**Carburetor Kit** Fits 31A model series snow throwers with 478-SUA/SUB engines (2012–2014)	

C

OREGON	Replaces	Description	Product Code

Carburetor Kits

49-328	Cub Cadet 951-12788A Cub Cadet 951-11021A Cub Cadet 951-11021 Cub Cadet 751-12788A Cub Cadet 751-11021A Cub Cadet 751-11021	**Carburetor Kit** Fits 31A model series snow throwers with 370-JUA/370-SUC engines (2012–2014)	
49-327	Cub Cadet 951-14231 Cub Cadet 951-11355 Cub Cadet 951-11355 Cub Cadet 751-14321 Cub Cadet 751-11355A Cub Cadet 751-11355	**Carburetor Kit** Fits 31A model series snow throwers with 490-SU/490-SUA engines	
49-829	Homelite A98064-11 Shindaiwa 99909-105	**Diaphragm and Gasket Kit** Fits ST80, 100, 120, 160, & 200 models with Kawasaki engines and TK carburetors, and Shindaiwa model T-20	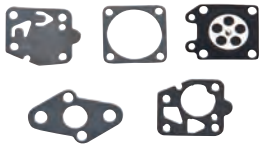
49-312	Honda 16010-ZE0-025 Honda 16010-ZE0-015	**Carburetor Gasket Set** Fits GX120, GX160, GX200, GXV120, GXV140, & GXV160	
49-325	Honda 16010-ZE1-812 Honda 16010-ZE1-811	**Gasket Set—Carburetor** Fits GX110, GX120, GX140, GX160, & GX200 engines	
49-401	Kohler 25-757-01S Kohler 231555	**Carburetor Rebuild Kit** For 4-16 HP engines Fits K91, K141, K161, K181,K241,K301, K321, & K341 series	
49-700	Kohler 25-757-115 Kohler 25-757-08 Kohler 25-757-13	**Carburetor Rebuild Kit** For K & M series models with Walbro carburetor	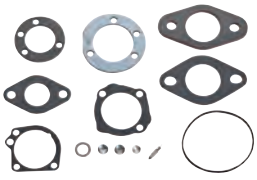

C

Carburetor Parts

OREGON	Replaces	Description	Product Code	

Carburetor Kits

49-301	Lawn Boy 678415 Lawn Boy 677271	**Carburetor Rebuilt Kit** For C & D series engines		
49-329	MTD 951-12760A MTD 951-11332A MTD 951-11332 MTD 751-12760A MTD 751-11332A MTD 751-11332	**Carburetor Kit** Fits 31A model series snow throwers with 483-SUB engines (2008 – 2014)		
49-331	MTD 951-12762A MTD 951-11219A MTD 951-11219 MTD 751-12762A MTD 751-11219A MTD 751-11219	**Carburetor Kit** Fits 31A model series snow throwers with 478-SUA/SUB engines (2012 – 2014)		
49-328	MTD 951-12788A MTD 951-11021A MTD 951-11021 MTD 751-12788A MTD 751-11021A MTD 751-11021	**Carburetor Kit** Fits 31A model series snow throwers with 370-JUA/370-SUC engines (2012–2014)		
49-327	MTD 951-14231 MTD 951-11355A MTD 951-11355 MTD 751-14321 MTD 751-11355A MTD 751-11355	**Carburetor Kit** Fits 31A model series snow throwers with 490-SU/490-SUA engines		
49-825	Nikki	**Diaphragm and Gasket Kit** Fits Mitsubishi T110, T140, T180, & T200, TAS and Maruyama trimmers, Snapper 210SST, 211SST, 240SS, & 2450, Toro TC1000, 3000, 4000, & 5000		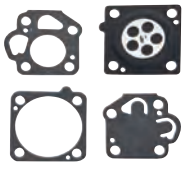
49-826	Nikki	**Diaphragm and Gasket Kit** Fits Mitsubishi T300 and up with BA401 engine, Snapper 410, 411SST, & 4150, and Redmax BA401 blower		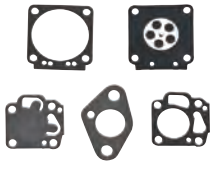
49-420	Oregon®	**Carburetor Kit** For Oregon carburetors Fits Oregon 50-640 carburetor		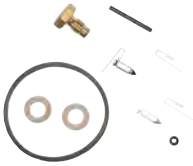

C

OREGON	Replaces	Description	Product Code

Carburetor Kits

49-421	Oregon	**Carburetor Kit** For Oregon® carburetors Fits Oregon 50-641 & 50-654 carburetors	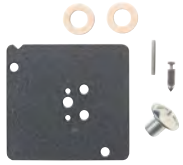
49-422	Oregon	**Carburetor Kit** For Oregon carburetors Fits Oregon 50-642 carburetor	
49-426	Oregon	**Carburetor Kit** For Oregon carburetors Fits Oregon 50-650 carburetor	
49-427	Oregon	**Carburetor Kit** For Oregon carburetors Fits Oregon 50-653 carburetor	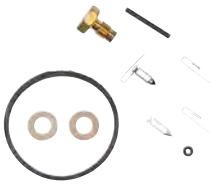
49-428	Oregon®	**Carburetor Kit** For Oregon carburetors Fits Oregon 50-651 carburetor	
49-429	Oregon	**Carburetor Kit** For Oregon carburetors Fits Oregon 50-646 carburetor	
49-430	Oregon	**Carburetor Kit** For Oregon carburetors Fits Oregon 50-655 & 50-656 carburetors	
49-432	Oregon	**Carburetor Kit** For Oregon carburetors Fits Oregon 50-647 carburetor	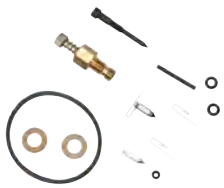

C

Carburetor Parts

OREGON	Replaces	Description	Product Code	

Carburetor Kits

49-433	Oregon®	**Carburetor Kit** For Oregon carburetors Fits Oregon 50-649 & 50-652 carburetors		
49-435	Oregon	**Carburetor Kit** Fits Oregon 50-657 & 50-658 carburetors		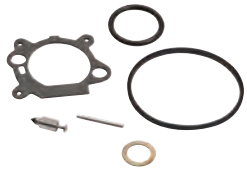
49-436	Oregon	**Carburetor Kit** For all Oregon Tecumseh replacement carburetors with metal float bowl		
49-827	TK	**Diaphragm and Gasket Kit** Fits Green Machine and John Deere with Fuji engines, Hoffco and Robin with Fuji engines, Green Machine models 2000, 2500, 3000, & 3100 For carburetors with round fuel pump		
49-828	TK	**Carburetor Rebuild Kit** Fits Green Machine and John Deere with Fuji engines, Hoffco and Robin with Fuji engines, Green Machine models 2000, 2500, 3000, & 3100, and Shindaiwa models T20 & T25 For carburetors with round fuel pump		
49-846	TK	**Carburetor Rebuild Kit** Fits Homelite ST80, 100, 120, 160, & 200 models with Kawasaki engines and TK carburetors		
49-201	Tecumseh 29155 Tecumseh 29157 Tecumseh 30359 Tecumseh 31390 Walbro K1LMB Walbro K3-LMB	**Carburetor Rebuild Kit** For 2-8 HP engines with Walbro carburetors		

C

Carburetor Kits

OREGON	Replaces	Description	Product Code
49-840	Tecumseh 31840	**Carburetor Rebuild Kit** For Tecumseh-built carburetors	
49-029	Tecumseh 631029 Tecumseh 631240	**Carburetor Rebuild Kit** For Tecumseh-built carburetors	
49-133	Tecumseh 631782	**Carburetor Rebuild Kit** Fits V60, H80, HM80, VM80, & TVM140 model engines	
49-978	Tecumseh 631978	**Carburetor Rebuild Kit** Fits Tecumseh-built carburetors	
49-229	Tecumseh 631584 Tecumseh 631839	**Carburetor Rebuild Kit** Fits H25-70, LAV25-35, HM40-70, V50-70, & VH50-70 engines	
49-239	Tecumseh 631893A	**Carburetor Repair Kit** Fits many Tecumseh-built diaphragm carburetors	
49-019	Tecumseh 632760 Tecumseh 632760A	**Carburetor Rebuild Kit** Fits all Tecumseh-built carburetors, and H25-70, LAV25-35, HM40-70, V50-70, & VH50-70 engines	
49-230	Tecumseh 632347	**Carburetor Rebuild Kit** Fits many HM80-HM100 engines	
49-805	Tillotson RK14HU Tillotson RK13HU	**Carburetor Rebuild Kit** For HU series carburetors	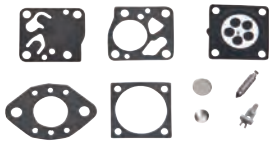

C

Carburetor Parts

OREGON	Replaces	Description	Product Code	

Carburetor Kits

49-804	Tillotson DG2HU Tillotson DG1HU Tillotson DG3HU	**Diaphragm and Gasket Kit** For HU series carburetors		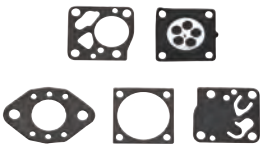
49-803	Tillotson RK23HS Tillotson RK17HS	**Carburetor Rebuild Kit** For HS series carburetors		
49-802	Tillotson DG5HS Tillotson DG1HS Roper 9576H	**Diaphragm and Gasket Kit** For HS series carburetors		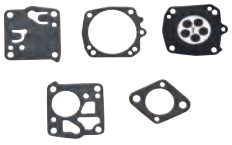
49-800	Tillotson DG1HK Roper 2504J	**Diaphragm and Gasket Kit** For HK series carburetors		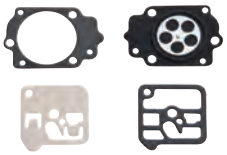
49-813-1	Tillotson DG3HL	**Diaphragm and Gasket Kit** Fits Stihl model 070 chainsaw		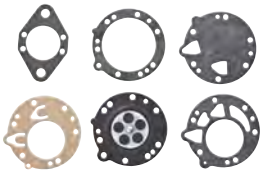
49-801	Tillotson DG5HL Tillotson DG2HL	**Diaphragm and Gasket Kit** For HL series carburetors		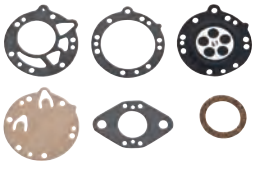
49-304	Toro 77-8930	**Carburetor Rebuild Kit** For engines with Walbro carburetors and 5-1/2 HP walk-behind mowers Complete with bowl gasket, throttle shaft seals, and o-rings		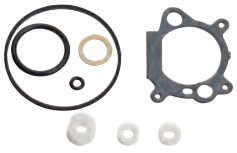
49-849	Walbro K10HD	**Carburetor Rebuild Kit** For HD series carburetors		
49-847	Walbro D10HD	**Diaphragm and Gasket Kit** For HD series carburetors		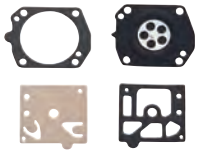

C

Carburetor Kits

OREGON	Replaces	Description	Product Code
49-845	Walbro K20-HDA	**Carburetor Rebuild Kit** For HDA series carburetors	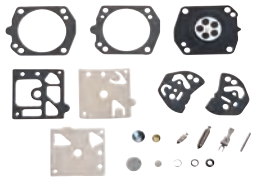
49-835	Walbro D20-HDA Sachs-Dolmar 119.151.540.7	**Diaphragm and Gasket Kit** For HDA series carburetors	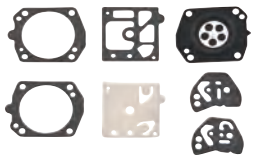
49-853	Walbro K22HDA	**Carburetor Rebuild Kit** For HDA series carburetors Economy version of 49-845	
49-852	Walbro D22HDA	**Diaphragm and Gasket Kit** For HDA series carburetors Economy version of 49-835	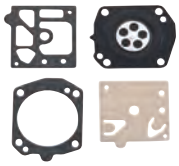
49-832	Walbro K10HDB	**Carburetor Rebuild Kit** For HDB series carburetors	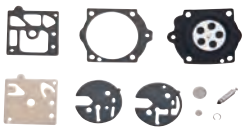
49-806	Walbro D10HDB Walbro D1HDB Walbro 350-518 McCulloch 217076 Weed Eater 35128 Echo 123101-12330	**Diaphragm and Gasket Kit** For HDB series carburetors	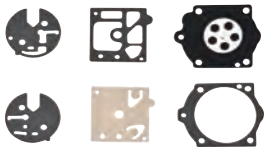
49-833	Walbro K10HDC	**Carburetor Rebuild Kit** For HDC series carburetors	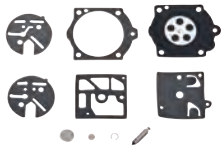
49-807	Walbro D10HDC Walbro D1HDC Walbro 350-503 Sach Dolmar 118.151.520.0	**Diaphragm and Gasket Kit** For HDC series carburetors	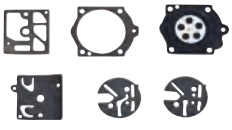
49-834	Walbro K10-SDC AYP 2413J	**Carburetor Rebuild Kit** For SDC series carburetors	

C

Carburetor Parts

OREGON	Replaces	Description	Product Code

Carburetor Kits

49-810	Walbro D1-SDC Walbro D10-SDC Walbro 350-501 Echo 123101-12430 AYP 2421J	**Diaphragm and Gasket Kit** For SDC series carburetors	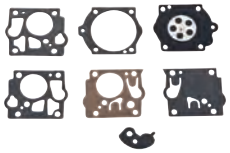
49-816	Walbro K10WA&T Walbro K6WA Echo 123100-16330	**Carburetor Rebuild Kit** For WA & WT series carburetors	
49-812	Walbro D1WA&T Walbro D10WA&T Walbro 350-502 Echo 123101-0393 Echo 123100-03930 Weed Eater 35146	**Diaphragm and Gasket Kit** For WA & WT series carburetors	
49-831	Walbro K20WAT	**Carburetor Rebuild Kit** For newer WA & WT series carburetors	
49-844	Walbro D20-WAT	**Diaphragm and Gasket Kit** For newer WA & WT series carburetors	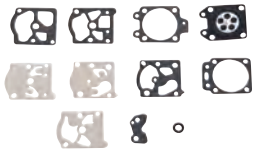
49-872	Walbro K10-WB	**Carburetor Rebuild Kit** For all WB series carburetors except WB25, WB32, & WB33	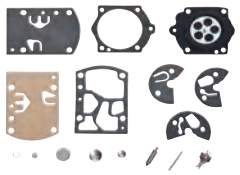
49-873	Walbro K10-WJ	**Carburetor Rebuild Kit** For WJ series carburetors	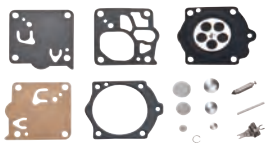
49-843	Walbro D10-WJ	**Diaphragm and Gasket Kit** For WJ series carburetors	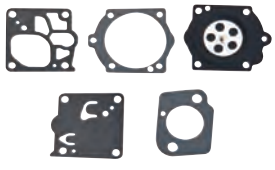
49-875	Walbro K10-WY	**Carburetor Rebuild Kit** For WY series carburetors	

C

Carburetor Kits

OREGON	Replaces	Description	Product Code
49-839	Walbro D10WY	**Diaphragm and Gasket Kit** For WY series carburetors	
49-281	Walbro D20-WYJ	**Diaphragm and Gasket Kit** For WYJ series carburetors	
49-882-0	Walbro K20-WYJ	**Carburetor Rebuild Kit** For WYJ series carburetor	
49-317	Walbro D11-WYL	**Diaphragm and Gasket Kit** For WYL carburetors	
49-316	Walbro K20-WYL	**Carburetor Rebuild Kit** For WYL carburetors	
49-877	Walbro K10-WZ	**Carburetor Rebuild Kit** For WZ series carburetors	
49-848	Walbro D10WZ	**Diaphragm and Gasket Kit** For WZ series carburetors	
49-809	Walbro D1-MDC Walbro 350-504	**Diaphragm and Gasket Kit** For many McCulloch saws and MDC series carburetors	

C

Carburetor Parts

OREGON	Replaces	Description	Product Code	

Carburetor Kits

49-814	Walbro D1WS Walbro D10WS Walbro 350-511	**Diaphragm and Gasket Kit** For WS series carburetors		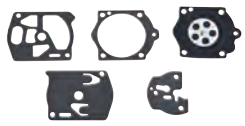
49-272	Zama RB-47	**Carburetor Rebuild Kit** Fits C1Q-E3, C1Q-E4, C1Q-E6, A C1Q-11, A-G C1Q-W31, A, B C1Q-W34, A C1Q-W35, A C1Q-W36, A C1Q-W37, C1Q-W38, C1Q-W39, C1Q-W40, C1Q-W41, C1U-W10, B, C C1U-W12, A, B C1U-W13, A, B C1U-W16, B, C C1U-W22, & C1U-W46 model carburetors		
49-439	Zama RB-64	**Carburetor Rebuild Kit** Fits C1U-K47, C1U-K51, C1U-K52, C1U-K53, C1U-K55, C1U-K58, C1U-K59, C1U-K62, & C1U-SK17		
49-904	Zama RB-69	**Carburetor Rebuild Kit** Fits model C1Q-EL11, EL11A, EL11B, EL13, & S32 series carburetors OEM KIT		
49-271	Zama RB-71	**Carburetor Rebuild Kit** For C1U-K54, A C1U-181, & A, B C1U-K82 model carburetors		
49-908	Zama RB-73	**Carburetor Rebuild Kit** Fits model C1U-W4A, W4B, W4C, W7, W7A, & W7C series carburetors OEM KIT		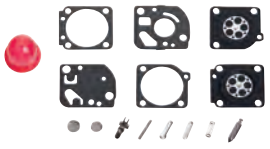
49-274	Zama RB-77	**Carburetor Rebuild Kit** For C1Q-S43, A, B C1Q-S57, A, B C1Q-S137, & A C1Q-S152 model carburetors		
49-902	Zama RB-39	**Carburetor Rebuild Kit** Fits model C1Q-H14, H14A, H14B, H19A, H19B, H19C, H27, H32, H32A, M27, M27A, M27B, M27C, M27D, M28, M28A, M28B, M28C, M28D, M33, M33A, M33B, M33C, M36A, & W2A series carburetors OEM KIT		
49-437	Zama RB-40	**Carburetor Rebuild Kit** For model C1Q-S33, S33A, S33B, S34, S34A, S34B, S34C, S34D, S34E, S34F, S34G, S34H, S35, S35A, S35B, S36, S36A, S36B, S36C, S36D, S36E, S36F, S36G, S51, S51A, S51S, SK4, SK5, SK6, SK6A, & SK7 series carburetors		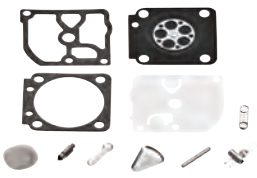

C

Carburetor Kits

OREGON	Replaces	Description	Product Code
49-903	Zama RB-44	**Carburetor Rebuild Kit** Fits C1M-K24, K24A, K24B, K25, K25A, K25B, K49, K49A, K49B, & K49C series carburetors OEM KIT	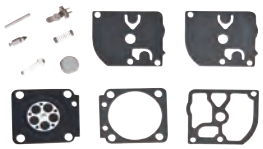
49-438	Zama RB-45	**Carburetor Rebuild Kit** Fits C1Q-EL1, EL5, EL6, EL7, EL10, & M43 series carburetors	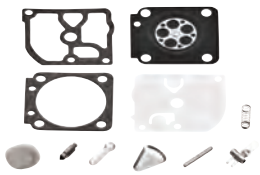
49-286	Zama RB-59	**Carburetor Rebuild Kit** For C1U series carburetors C1U-K42(A-B), C1U-K43(A-B), & C1U-K44(A-B)	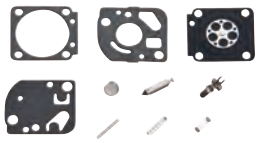
49-901	Zama RB-59	**Carburetor Rebuild Kit** OEM KIT	
49-906	Zama RB-61	**Carburetor Rebuild Kit** Fits model C1M-K37A, K37B, K37C, & K37D series carburetors OEM KIT	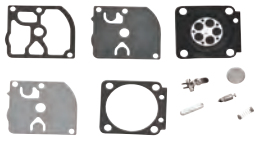
49-861	Zama RB-1 Zama RB-01	**Carburetor Rebuild Kit** Fits C1-17-01C, C1-17-02A, & C1-M2B Use on McCulloch and others	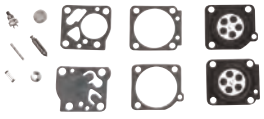
49-854	Zama GND1	**Diaphragm and Gasket Kit** Fits C1-17-01C, C1-17-02A, & C1-M2B models carburetors, McCulloch models PM510 & PM300	
49-819-0	Zama RB-1 Zama RB-01	**Carburetor Rebuild Kit** Fits C1-17-01C, C1-17-02A, C1-M2B For McCulloch and others OEM KIT	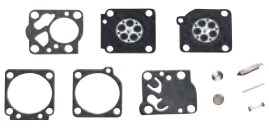
49-837-0	Zama RB-6 Zama RB-06	**Carburetor Rebuild Kit** Fits Echo 280E & 290 with C1S-K1 carburetors	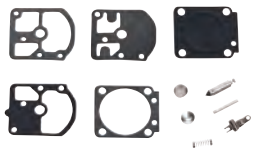
49-818-0	Zama RB-10 McCulloch 218071 Toro 4-2181 Snapper 4-2181	**Carburetor Rebuild Kit** Fits C1S-M, M9, M12, & M13 series carburetors For McCulloch and others OEM KIT	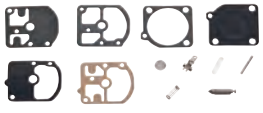

C

Carburetor Parts

OREGON	Replaces	Description	Product Code	

Carburetor Kits

49-863	Zama RB11	**Carburetor Rebuild Kit** Fits models C1S-S1, S1A, S1B, & S1C carburetors on Stihl and others		
49-859	Zama GND07 Zama GND07	**Diaphragm and Gasket Kit** Fits CSS series carburetors used on Stihl and others		
49-836-0	Zama RB15	**Carburetor Rebuild Kit** Fits Homelite XL-12, & SXL chainsaws, McCulloch PM800, PM850, & SP81 chainsaws OEM KIT		
49-860	Zama GND8 Zama GND08	**Diaphragm and Gasket Kit** Fits Homelite and McCulloch models using C2-20, C2-L1, & C2-M series carburetors		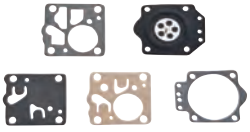
49-864	Zama RB20 Homelite A00288	**Carburetor Rebuild Kit** Fits C1U series on Homelite and others		
49-817-0	Zama RB20 Homelite A00288	**Carburetor Rebuild Kit** OEM KIT		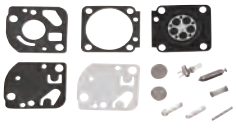
49-822-0	Zama RB21 Echo 125302-42030 Echo 125302-11520 John Deere AM104875	**Carburetor Rebuild Kit** Fits C1U-K7 thru K11, K16, K26, K29, & K32 carburetors, Echo models GT1100, GT2100, GT2103, HC1000, PB1000, PB1010, SRM1400, SRM2300, & HC1500 OEM KIT		
49-865	Zama RB21	**Carburetor Rebuild Kit** Fits Echo HC1500 & SRM2301 with C1U-K10 & K12 carburetors		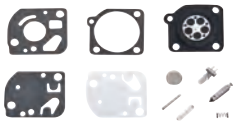
49-283	Zama RB-23	**Carburetor Rebuild Kit** Fits carburetor models C1U-K17, C1U-K27, CIU-K27A, C1U-K27B, C1K-27C, & C1K-27D		
49-887-0	Zama RB-23	**Carburetor Rebuild Kit** OEM KIT		

C

Carburetor Kits

OREGON	Replaces	Description	Product Code
49-284	Zama RB-26	**Carburetor Rebuild Kit** Fits C1U series carburetors: C1U-K20(A-C), C1U-K21(A-B), C1U-K23, C1U-K31, C1U-K34A, C1U-SK11, C1U-SK12, C1U-SK13A, & C1U-SK14	
49-888-0	Zama RB-26	**Carburetor Rebuild Kit** OEM KIT	
49-880	Zama GND17 Zama GND14	**Diaphragm and Gasket Kit** Fits C1Q & C1U series carburetors, Echo SK11, 12, 13, H, & W7B, also some CQQSK, C1UD, & C1UK carburetors	
49-897	Zama RB-27 Zama RB-22	**Carburetor Rebuild Kit** Fits C1U-K10A carburetors, Echo SV-4, HC1500, & SRM2301	
49-866	Zama RB28 McCulloch 222404 Snapper 4-2414 Zama K500080	**Carburetor Rebuild Kit** Fits C1U series For McCulloch, Green Machine, Hoffco, and others	
49-285	Zama RB-29	**Carburetor Rebuild Kit** For C1U series carburetors: C1U-H12(C-D), C1U-H18(A-D), C1U-H29, C1U-H30B, C1U-H31(A-C), C1U-H33, C1U-H39A, C1U-H40, C1U-H41, C1U-H47, C1U-H48A, C1U-H60(A-E), C1U-M35A, C1U-P5, C1U-P6A, C1U-P7, C1U-P10A, C1U-P11(A-B), C1U-P12A, & C1U-P14A	
49-891-0	Zama RB-29	**Carburetor Rebuild Kit** OEM KIT	
49-855	Zama GND-12 Zama GND-15	**Diaphragm Gasket Kit** Fits C1U carburetors	
49-899	Zama RB31	**Carburetor Rebuild Kit** Fits C3A series carburetors	
49-893	Zama GND-21	**Diaphragm and Gasket kit** Fits C3A series carburetors	

C

Carburetor Parts

OREGON	Replaces	Description	Product Code

Carburetor Kits

49-921	Zama GND-27	**Diaphragm and Gasket Kit** - NEW Fits C1Q-D13 A, C1Q-DM14, C1Q-E5A, C1Q-E5B, C1Q-H14 A-B, C1Q-H17 A-D, C1Q-H19 A-C, C1Q-H27, C1Q-H32A, C1Q-H35, C1Q-H42, C1Q-H42, C1Q-H44, C1Q-H45, C1Q-M24, C1Q-M25, C1Q-M26, C1Q-M39, C1Q-W2A, C1Q-W5 A-C, C1Q-W6, A-C, & C1Q-W8 carburetors	
49-867	Zama RB36	**Carburetor Rebuild Kit** Fits C3M, Stihl 044 saws with C3M-S5D, C3M S5E, & S3M-S12A carburetors	
49-823-0	Zama RB36	**Carburetor Rebuild Kit** For C3M, Stihl 044 saws with C3M-S5D, C3M S5E, & S3M-S12A carburetors OEM KIT	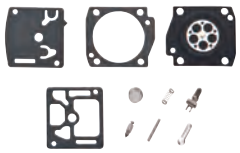
49-898	Zama RB-41	**Carburetor Rebuild Kit** Fits C1Q-EL21, 22, 23, C1Q-S11, 16, C1Q-W14, & 20	
49-879	Zama 11081200608 Zama RB42	**Carburetor Rebuild Kit** Fits LAS8 carburetors on Stihl model 08	
49-440	Zama RB-66	**Carburetor Rebuild Kit** Fits C1Q-S28, 29, 30, 41, 42, 44, & 45 series carburetors	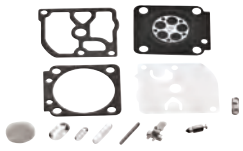
49-441	Zama RB-100	**Carburetor Rebuild Kit** Fits C1Q-S69A, S70, S71, S73, S79, S80B, S93, S95, S97, & S97A series carburetors	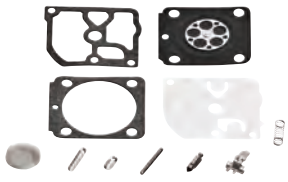
49-883	Zama GND-28	**Diaphragm and Gasket Kit** Fits C1Q carburetors used on Stihl	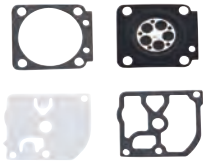
49-881	Zama GND-2	**Diaphragm and Gasket Kit** Fits C1S for Echo and Homelite	

C

Carburetor Kits

OREGON	Replaces	Description	Product Code
49-282	Zama GND4	**Diaphragm and Gasket Kit** Fits C1S-K1D carburetors	
49-885-0	Zama GND4	**Diaphragm and Gasket Kit** OEM KIT	
49-894	Zama GND-29 Zama GND-35	**Diaphragm and Gasket Kit** Fits C1Q series	
49-924	Zama GND-35	**Diaphragm and Gasket Kit** - NEW Fits most C10 type carburetors	
49-856	Zama GND-13	**Diaphragm and Gasket Kit** Fits C1U series: C1U-M16 & C1U-M20 used on Echo, McCulloch, and Toro	
49-270	GND-18	**Diaphragm and Gasket Kit** Fits C1Q & C1U series carburetors	
49-884	Zama GND-33 Zama GND-39	**Diaphragm and Gasket Kit** Fits C1Q carburetors on Husqvarna and Jonsered	
49-857	Zama GND-25	**Diaphragm and Gasket Kit** Fits C3M series carburetors on Stihl and others	
49-442	Zama GND-56	**Diaphragm and Gasket Kit** Fits C1Q-S68, S68A, S68B, S68C, S68D, S69A, S70, S71, S73, S79, S80B, S93, S95, S97, S97A, S105, S111, S112, S112A, S115, S115A, S116, S116A, S119, S119A, S120, S120A, S121, S121A, S122, S122A, S123, & S123A series carburetors	
49-288	ZAMA RB-89	**Carburetor Rebuild Kit** Fits C1Q series carburetors: C1Q-S48A, C1Q-S55, C1Q-S58, C1Q-S64, C1Q-S82, C1Q-S83, C1Q-S138, & C1Q-S139	

C

Carburetor Parts

OREGON	Replaces	Description	Product Code	

Carburetor Kits

49-276	RB99	**Carburetor Rebuild Kit** Fits C1Q-S68, A-D C1Q-S105, C1Q-S111, & C1Q-S115, & A, B C1Q-S116 A model carburetors		
49-273	RB105	**Carburetor Rebuild Kit** Fits C1Q-S75, A, B C1Q-S76, A, B C1Q-S77, A, B C1Q-S84, A-C C1Q-S85, A-C C1Q-S68, A-C C1Q-S86, A-C C1Q-S87, A-C C1Q-S89, A-C C1Q-S90, A, B C1Q-91, A C1Q-S92, A C1Q-S102, A C1Q-S106, & A C1Q-S107 A model carburetors		
49-287	ZAMA RB-114	**Carburetor Rebuild Kit** For C1Q series carburetors: C1Q-S72B, C1Q-S81, & C1Q-S88		
49-277	RB129	**Carburetor Rebuild Kit** For C1M-W26 A & C model carburetors		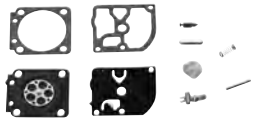
49-275	RB142	**Carburetor Rebuild Kit** For C1U-W32 A model carburetors		
49-322	ZAMA GND-53	**Diaphragm and Gasket Kit** Fits C1Q-S62 & C1Q-S67		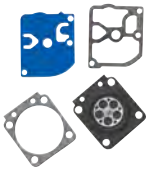
49-923	Zama GND-55, Zama GND-72, Zama GND-91, Zama GND-93,	**Diaphragm and Gasket Kit** - NEW Fits C1Q-S110B, C1Q-S110C, & C1Q-S110D		
49-313	ZAMA GND-84	**Diaphragm and Gasket Kit** Fits C1Q-S118		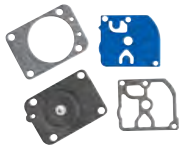
49-319	ZAMA RB-151	**Carburetor Rebuild Kit** Fits C1Q-S118		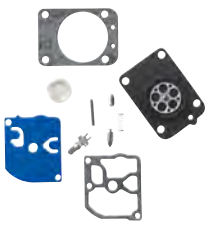

C

OREGON	Replaces	Description	Product Code

Carburetor Kits

49-320 ZAMA GND-89

Diaphragm and Gasket Kit
Fits C1Q-S140 & C1Q-S143

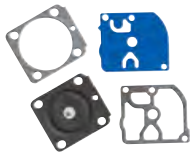

49-323 ZAMA GND-88

Diaphragm and Gasket Kit
Fits C1M-S141, C1M-S142, C1M-S144, C1M-S145, C1M-S146, & C1M-S151

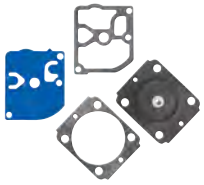

49-318 RB-155, RB-164, RB-180

Carburetor Rebuild Kit
Fits C1M-S141, C1M-S142, C1M-S144, C1M-S145, C1M-S146, & C1M-S151

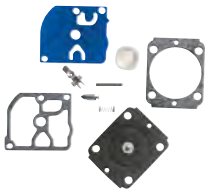

Gasket / Intake – 2-Cycle Engines

OREGON	Qty.	Description	Product Code
08-010	114	Gasket/Intake 2-Cycle engines Standard refill qty. 10	

Components

–	10	Intake gasket for HU*	
–	5	Intake gasket for HK*	
–	5	Intake gasket for HK*	
–	10	Intake gasket for HCA, HDA*	
–	5	Intake gasket for HL*	
–	5	Intake gasket for HS*	
–	10	Intake gasket for WS**	
–	5	Intake gasket for MDC**	
–	2	Intake gasket for WZ**	
–	2	Intake gasket for WZ**	
–	5	Intake gasket for HL*	
–	10	Intake gasket*	
–	10	Intake gasket•	
49-262	10	Intake gasket	
–	10	Intake gasket	
–	5	Gasket material	
–	5	Intake gasket*	

* Tillotson **Walbro

49-603 Kohler 17 755 06-S

Gasket Set - NEW
Fits Kohler CH260 & CH270

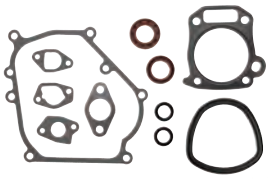

49-604 Kohler 17 755 44-S

Gasket Set - NEW
Fits Kohler CH440

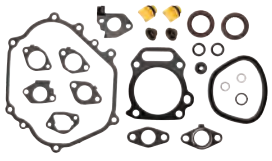

C

Carburetor Parts

OREGON	Replaces	Description	Product Code

Gasket / Intake – 2-Cycle Engines

49-605	Kohler 17 755 43-S	**Gasket Set** - NEW Fits Kohler CH395	
49-606	Kohler 24 153 30-S	**Gasket Valve-cover** - NEW Fits Kohler CH, CV, ECH, & SV series engines	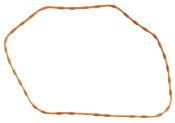
49-607	Kohler 24 841 04-S	**Gasket Kit, Head** - NEW Fits CH25, CH730, CH740, & CV25 For 25 HP engines	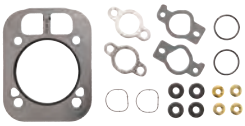

Diaphragms

49-004	Briggs & Stratton 270026	**Diaphragm** For 3, 3-1/2, 4, & 5 HP engines Fits 60000, 80000, 100000, & 130000 series	
49-003	Briggs & Stratton 270253	**Diaphragm** For 3 and 3-1/2 HP vertical engines with manual choke 82500 & 92000 series before type 0500	
49-001	Briggs & Stratton 272538 Briggs & Stratton 272538S	**Diaphragm** New style for horizontal 3-1/2 HP engines	
49-005	Briggs & Stratton 299637 Briggs & Stratton 496418	**Diaphragm** Fits 3 HP vertical engines with automatic choke 92500 series above type 0500	
49-006	Briggs & Stratton 391681 Briggs & Stratton 391643 Briggs & Stratton 496416	**Diaphragm** For 3-1/2 and 4 HP engines with automatic choke Fits 92900 series type 0500 & above, & 110900 series	
49-007	Briggs & Stratton 495770 Briggs & Stratton 795083	**Diaphragm Kit – Carburetor** Fits model 95900 & 96900	
49-037	Briggs & Stratton 5021	**Diaphragm Kit – Carburetor** For 5 HP horizontal engines	

C

Diaphragms

OREGON	Replaces	Description	Product Code
53-001	Briggs & Stratton 221377 Briggs & Stratton 690766	**Diaphragm Spring Cup** Fits Oregon® 49-080	
49-213	Briggs & Stratton 272638	**Fuel Pump Diaphragm** Fits 40 & 42 CID twin cylinder engines	
49-008	Briggs & Stratton 393397	**Diaphragm Kit – Fuel Pump** For 16 and 18 HP twin cylinder engines Fits 401400, 402400, 402700, 422400, & 422700 series	
49-224	Briggs & Stratton 693502	**Fuel Pump Rebuild Kit** For 40 & 42 CID twin cylinder engines with four-screw mounting	
49-002	Tecumseh 630978	**Diaphragm** For all engines with diaphragm carburetors 3 – 5 HP	
49-922	Zama A015002	**Metering Diaphragm** - NEW Fits C1-17-01C & C1-17-02A carburetors	
49-917	Zama A015010 Zama A015018	**Metering Diaphragm** - NEW Fits C1U & C1Q carburetors	
49-918	Zama A015052 Zama A015053 Zama A015046 Zama A015048 Zama A015070	**Metering Diaphragm** - NEW Fits C1Q-S carburetors	
49-919	Zama A015006	**Metering Diaphragm** - NEW Fits C1S carburetors	
49-920	Zama A015011 Zama A015016 Zama A015019 Zama A015041 Zama A015042 Zama A015044 Zama A015050 Zama A015077	**Metering Diaphragm** - NEW Fits C1Q-S & C1U carburetors	

Carburetor Parts

Carburetor Floats

OREGON	Replaces	Description	Product Code	
49-362	Briggs & Stratton 298514/ 692265	**Float** Fits large two-piece Flo-jet carburetors 240000 series engines		
49-363	Briggs & Stratton 99333	**Float** Fits small two-piece Flo-jet carburetors 140000 to 190000 series engines		
49-214	Briggs & Stratton 299707	**Float** Fits 14, 17, & 19 CID horizontal shaft engines with one-piece Flo-jet carburetors		
49-992	Honda 16013-ZA0-931	**Carburetor Float** Fits model GX240 & GX270 series engines		
49-993	Honda 16013-ZA0-065	**Carburetor Float** Fits model G110 & GX120 series engines		
49-911	Honda 16013-ZA0-005	**Carburetor Float** Fits model G160 series engine		
49-912	Honda 16013-ZA0-931	**Carburetor Float** Fits model G340 & GX390 series engines		
49-913	Honda 16013-883-005	**Carburetor Float** Fits model G200 series engine		
49-242	Oregon®	**Float** For Oregon carburetors only Fits Oregon 50-640, 50-648, 50-650, 50-653, 50-651, 50-646, 50-656, 50-655, & 50-647 carburetors		
49-243	Oregon®	**Float** For Oregon carburetors only Float for Oregon 50-641, 50-654, 50-649, & 50-652 carburetors		

C

OREGON	Replaces	Description	Product Code	

Carburetor Floats

49-009	Tecumseh 632019	**Carburetor Float** For all Tecumseh-built carburetors		

Carburetor Float Bowls

49-209	Briggs & Stratton 221995	**Float Bowl** For 14, 17, & 19 CID vertical-shaft engines with one-piece Flo-jet carburetors		
49-235	Briggs & Stratton 493640	**Float Bowl** Fits 93300 series engines and LME carburetors Replaces Walbro 20-141-1 & 20-141		
49-219	Briggs & Stratton 495933	**Float Bowl** Fits Walbro carburetors on 19 & 28 CID engines		
49-985	Honda 16015-892-505	**Carburetor Float Bowl and Gasket** Fits GCV135-160		
49-994	Honda 16015-ZE0-811	**Float Bowl** Fits model G100 & G200 series engines 1.678" dia. x 1.275" height. Includes o-ring and nut		
49-995	Honda 16015-ZE1-811 Honda 16015-ZE0-831	**Float Bowl** For GX110, GX120, GX140, GX160, & GX200 1.830" dia. x 1.380" height Includes o-ring and nut		
49-307	Tecumseh 631700	**Float Bowl** For most Tecumseh-built carburetors Use Oregon® 49-841 bowl gasket		
49-308	Tecumseh 631867	**Carburetor Bowl**		

C

Carburetor Parts

OREGON	Replaces	Description	Product Code

Carburetor Float Bowl Assembly – Repair Kits

49-237	Tecumseh 730638	**Float Bowl Assembly Repair Kit** Fits Tecumseh carburetors 640065, 640065A, & 640176, engines OHV110, OHV115, OHV120, OHV130, & OHV135	
49-238	Tecumseh 730639	**Float Bowl Assembly Repair Kit** Fits Tecumseh carburetors 632786A, 640034, 640034A, 640072, 640072A, & 640159, engines OHV135, OHV14, OHV140, OHV145, OHV15, OHV150, OHV155, OHV16, OHV160, OHV165, OHV17, OHV170, & OHV175	
49-240	Tecumseh 730235B	**Float Bowl Assembly Repair Kit** Fits Tecumseh carburetors 632671, 632671A, 632671B, & 632671C, use on VLV126, VLV40, VLV50, VLV55, VLV60, VLV65, VLV66, VLX50, & VLX55 (non-EPA)	
49-241	Tecumseh 730637A	**Float Bowl Assembly Repair Kit** Fits Tecumseh carburetors 640020, 640020A, 640020B, 640158, & 640158A, use on VLV126, VLV50, VLV55, VLV60, VLV65, & VLV66	

Carburetor Float Bowl Gaskets

49-999		**Carb Bowl Gasket Kit with Bowl Nut** For Oregon® 49-995, Fits GX110, GX120, GX140, GX160, & GX200 1.830" dia. x 1.380" height	
49-300	Lawn Boy 683778 John Deere AM104806	**Carburetor Bowl Gasket Kit** For newer Lawn Boy mowers with Walbro carburetors	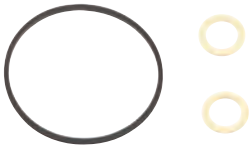
49-815	Honda 16010-883-005	**Carburetor Bowl Gasket Kit** Fits HR21 series with Pulsa-jet carburetors	
49-841	Tecumseh 631028	**Carburetor Bowl Gasket** Fits Tecumseh float bowls 631867 & 631700	
49-998		**Carb Bowl Gasket Kit with Bowl Nut** For Oregon® 49-994 Fits G100 & G200 series engines	

C

OREGON	Replaces	Description	Product Code

Carburetor Float Bowl Gaskets

49-160	Briggs & Stratton 27034	**Carburetor Body Gasket** Fits models 142000 thru 147000, 252000, 301000, & 325000	
49-123	Briggs & Stratton 27918 Briggs & Stratton 394209	**Carburetor Body Gasket** Fits models 142700, 147000, 170000, 190000, 191000, & 200000	
49-246	Briggs & Stratton 281165S	**Carburetor Bowl Gasket** Fits LMT Walbro carburetors used on model 192400 engines	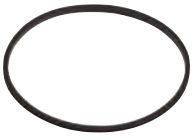
49-986	Honda 16010-883-015	**Carburetor Float Bowl Gasket** Fits GCV135/160, G-15, G-200, G-300, & G-400	
49-608	Honda 16010-ZE2-812	**Float Bowl Gasket Kit** - NEW Fits GX240, GX270, GX340, & GX390	
50-502	Lawn Boy 602850	**Carburetor Bowl Gasket** For F series engines 2-3/4" x 2-1/4"	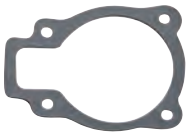
49-315	Walbro 92-351	**Carburetor Bowl Gasket** For LMF carburetors	

Fuel Screens

55-340	Tillotson 95-197	**Fuel Screen** For HK series	
55-342	Walbro 140-70-08	**Fuel Screen** Fits HDA, HDB, HDC, SDC, WA, WAT, WB, WS, WT, WTA, WY, & WYP	
55-343	Walbro 140-69-08	**Fuel Screen** Fits HDA, HDB, HDC, SDC, WA, WAT, WTA, WT, & WB	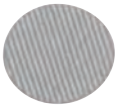

C

Carburetor Parts

OREGON	Replaces	Description	Product Code	

Needle Valves / Kits

49-210	Briggs & Stratton 231855S	**Float Valve** For Walbro carburetors		
49-077	Briggs & Stratton 299060	**Needle Valve Kit** For 3, 3.5, and 5 HP engines		
49-033	Briggs & Stratton 394681	**Float Valve and Seat Kit** 7 – 18 HP engines, model series 170400 thru 422700		
49-038	Briggs & Stratton 394682	**Float Valve and Seat Kit** Fits 7 thru 16 HP engines with press-in brass seat		
49-360	Briggs & Stratton 394683	**Float Valve and Seat Kit** Fits large two-piece Flo-jet carburetors		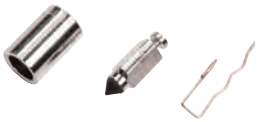
49-036	Briggs & Stratton 398188	**Float Valve and Seat Kit** For Max and Quantum series engines Fits Walbro carburetors models 83400, 90700, 91700, 93452, 99700, 111700, 114700, 121700, 12G700, 12G800, 133700, & 135700 series		
49-218	Briggs & Stratton 494788	**Float Valve and Seat Kit** For Walbro carburetors		
49-359	Briggs & Stratton 715075	**Float Valve** Fits 115400 series engines		
49-361	Briggs & Stratton 715155	**Float Valve** Fits 185400 series engines		
49-997	Honda 16011-ZA0-931	**Float Valve** Fits models GX240, GX270, GX340, & GX390 series engines		

C

OREGON	Replaces	Description	Product Code	

Needle Valves / Kits

49-996	Honda 16011-ZE0-005	**Float Valve** Fits models GX110, GX120, GX140, & GX160 series engines		
49-035	Lawn Boy 396521 Lawn Boy 92-9697	**Float Valve and Seat Kit** For Lawn Boy-built carburetors Fits D-600 and F series engines 7 – 18 HP horizontal engines		
49-244	Oregon®	**Needle Valve** For Oregon carburetors only Fits Oregon 50-640, 50-648, 50-650, 50-653, 50-651, 50-646, 50-656, 50-655, 50-659, 50-662, 50-663, 50-664, 50-665, & 50-666 carburetors		
49-039	Tecumseh 630932A	**Needle and Seat Kit** Diaphragm carburetors on LAV series and H22 thru H40 4-cycle engines and 638, 650 and 670 2-cycle engines		
49-025	Tecumseh 631021	**Float Valve and Seat Kit** 3.5 – 18 HP horizontal engines Fits all Tecumseh-built carburetors		
49-916	Tecumseh 631021B	**Inlet Needle and Seat with Gaskets** Fits many Tecumseh-built carburetors		
49-021	Tillotson 34-188 Tillotson 34-216 Walbro 82-26, 82-75, 82-76 Zama 0018002	**Needle Valve** 7 – 18 HP horizontal engines 5/8" length needle Viton tip		
49-023	Tillotson 34-210 Tillotson 34-219 Walbro 82-82 / 82-87 Zama 0018004	**Needle Valve** 3/8" length needle Viton tip		

Primer Bulbs

49-058	Briggs & Stratton 494408	**Primer Bulb** Fits Quantum series engines 3.5, 3.75 and 4 HP engines Fits models with Pulsa-Prime carburetors	
49-079	Briggs & Stratton 496115	**Primer Bulb** Fits Quantum engines 5, 5.5, and 6 HP engines	

C

Carburetor Parts

OREGON	Replaces	Description	Product Code

Primer Bulbs

49-609	Briggs & Stratton 793382	**Primer Bulb Assembly** - NEW Fits most 10D000, 120000, 12A000, 12D000, & 12C000 models	
49-326	MTD 951-10639A MTD 951-10639 MTD 751-10639A MTD 751-10639 Cub Cadet 951-10639A Cub Cadet 951-10639 Cub Cadet 751-10639A Cub Cadet 751-10639	**Primer Assembly** Fits 31A model series snow throwers (2008–2014)	
49-611	MTD 951-10639 MTD 951-10639A MTD 951-10888B	**Primer Bulb** - NEW Fits 161-JW, 161-JWA, 165-SU, 478-SU, 483-SU, 365-SUA, 490-SU, 365-SUB, 370-SUB, & 370-SUA Height: 1", outer diameter: 1-5/8"	
55-118	Kawasaki 49043-2065	**Primer Bulb** Models TD18, TD24, & TG33	
49-034	Tecumseh 632047	**Primer Bulb** Fits TNT100, TNT120, ECV105, ECV110, ECV120, & TVS series With retainer clip, OD: 1", height: 3/4"	
49-085	Tecumseh 36045A Tecumseh 640259	**Primer Bulb** Fits VLV-126, VLV-50, VLV-60, VLV-65, & VLV-66 model Vector series engines	
49-231	Tecumseh 632694A	**Primer Bulb** With vent hole Fits VLV and LEV engines	
49-444	Poulan 530038874	**Primer Bulb** For trimmer models BC2400, GTI16, GTI15, GTI17, GTI18, GTI19, LT17, LT7000, LT7500, PP111, PP114, PP115, PP165, PP175, PP176, PP185, PP195, PT7000, PROLITE, XT20, XT30, XT45, XT90, & XT125	
49-443	Poulan 530071835	**Primer Bulb** For chainsaw models 222, 255, 262, 1900, 1950, 2025, 2050, 2075, 2055, 2150, 2155, 2175, 2250, 2350, 2375, 2450, 2550, BH2160, BH2660, PP210, PP220, PP221, PP230, PP260, PPB1634, PPB1838, & SM4018	

C

OREGON	Replaces	Description	Product Code

Primer Bulbs

49-088-0	Ryobi 683974 Walbro 188-512 MTD 791-683974B	**Primer Bulb** For WT23A,WYJ33, WYJ34, WYJ45, & WYJ86 carburetors	
49-612	Husqvarna 505 30 67-01 Shindaiwa 68206-81430 Shindaiwa 20036-81670 Shindaiwa 70029-81480 Shindaiwa 188-121 Shindaiwa 123181-09560	**Primer Bulb** - NEW Fits Red Max/Shindaiwa AH230, AH231, AH242, AH2510, AHS231, AHS242, AHS2510, DH230, DH231, HT230, HT231, LE230, P230, P231, PB230, PB3410, C242, C282, C2510, EB240S, EB480, EB500, EB630, EB802, EB2510, EB3410, T231, T242, T282, & T3410; Walbro/Echo PB260, PB261, PB500H, PB650, PE2400, PE260, PE280, PE310, PE3100, PE311, SRM3001, SRM3010, SRM310, SRM3100, SRM311, SRM3110, SRM340, GT1100, & GT2200	
49-020	Walbro 188-12	**Primer Bulb** OD: .60", height: .55"	
55-187	Walbro 188-506	**Primer Bulb** Fits model WA-135, WA-148A, WA-150, WA-154, WA161, & WA-162 carburetors	
55-188	Walbro 188-508	**Primer Bulb** Fits model HDA-97 carburetor	
55-189	Walbro 188-509	**Primer Bulb** Fits model HDA-51, WA-180, WA-181, WA-184 WA-185, WA-187, WA-194, WT139, WT-145, WT-184, WT-243, & WT50 carburetors	

C

Can't find what you're looking for?

Try us online to search the latest products available.

OregonProducts.com

Carburetor Parts

OREGON	Replaces	Description	Product Code

Primer Bulbs

49-610	Walbro AYP47721, Echo 12318110860 Echo 12318139130 Echo 3801081330 Echo 5213001400 Homelite 01183 Homelite 1183 Homelite 300780002 Homelite 308088001 Husqvarna 503936601 Husqvarna 530047721 Makita 168398-2 MTD 753-1185 MTD 791-180000B MTD 791-181558 MTD 791-181801 MTD 791-683974 MTD 791-683974B MTD 791-BQ03241 Poulan 530047721 Red Max 530047721 Ryobi 683974 Ryobi 791-683974 B Stihl 4130 350 6200 Tanaka 6685139 Walbro 188-512 Walbro 188-512-1	**Primer Bulb** - NEW Fits Husqvarna K750 & K760 cut-off saws and many chainsaws, blowers, hedge trimmers, and string trimmers Height: 1-5/16", outer diameter: 7/8"	
49-026	Walbro 188-11	**Primer Bulb** For WZ series OD: .575", height: .390"	
49-027	Walbro 188-13	**Primer Bulb** For HDA series OD: .725", height: .60"	
49-028	Zama 0057003	**Primer Bulb** For C1Q series OD: .675", height: .575"	

Throttle Shaft

49-054	Briggs & Stratton 491006	**Throttle Shaft** For 8, 10, 11, and 12 HP vertical engines	

Welch Plugs

53-005	Tecumseh 631027	**Welch Plug** 9/16"	
53-006	Tecumseh 630748	**Welch Plug** 7/16"	

C

OREGON	Replaces	Description	Product Code	

Welch Plugs

55-332	Tillotson 179-60	**Welch Plug** For HS series, 7/32" diameter	
55-333	Walbro 88-28 Walbro 88-171	**Welch Plug** For WA series, Walbro 630746 5/16" diameter	
55-334	Walbro 88-89	**Welch Plug** WA series 5/32" diameter	

C

Carburetor Kit Reference

OEM CARBURETOR			OREGON	
Model	Kit	Gaskets	Kit	Gaskets
Walbro				
HD-10B	K10-HD	D10-HD	49-849	49-847
HD-1-1	K10-HD	D10-HD	49-849	49-847
HD-11A	K10-HD	D10-HD	49-849	49-847
HD-12-1	K10-HD	D10-HD	49-849	49-847
HD-13-1	K10-HD	D10-HD	49-849	49-847
HD-14	K10-HD	D10-HD	49-849	49-847
HD-15	K10-HD	D10-HD	49-849	49-847
HD-16	K10-HD	D10-HD	49-849	49-847
HD-17	K10-HD	D10-HD	49-849	49-847
HD-18A	K10-HD	D10-HD	49-849	49-847
HD-19A	K10-HD	D10-HD	49-849	49-847
HD-20-1	K20-HD	D20-HD		
HD-2-1	K10-HD	D10-HD	49-849	49-847
HD-21A	K10-HD	D10-HD	49-849	49-847
HD-22-1	K10-HD	D10-HD	49-849	49-847
HD-30-1	K20-HD	D20-HD		
HD-3-1	K10-HD	D10-HD	49-849	49-847
HD-40-318	K20-HD	D10-HD		49-847
HD-4-1	K10-HD	D10-HD	49-849	49-847
HD-43-1	K10-HD	D10-HD	49-849	49-847
HD44-1	K10-HD	D10-HD	49-849	49-847
HD-48-1	K10-HD	D10-HD	49-849	49-847
HD-5-1	K10-HD	D10-HD	49-849	49-847
HD-55-1	K21-HD			
HD-56-1	K21-HD			
HD-6-1	K10-HD	D10-HD	49-849	49-847
HD-7-1	K10-HD	D10-HD	49-849	49-847
HD-8A	K10-HD	D10-HD	49-849	49-847
HD-9A	K10-HD	D10-HD	49-849	49-847
HDA-10-1	K20-HDA	D10-HDA	49-845	49-835
HDA-101-1	K20-HDA	D10-HDA	49-845	49-835
HDA-102-1	K20-HDA	D10-HDA	49-845	49-835
HDA-103-1	K20-HDA	D10-HDA	49-845	49-835
HDA-104-1	K20-HDA	D10-HDA	49-845	49-835
HDA-105-1	K12-HDA	D11-HDA		
HDA-106-1	K20-HDA	D10-HDA	49-845	49-835
HDA-107-1	k20-HDA	D10-HDA		49-835
HDA-108-1	K20-HDA	D10-HDA	49-845	49-835
HDA-109-1	K20-HDA	D10-HDA	49-845	49-835
HDA-1-1	K20-HDA	D10-HDA	49-845	49-835
HDA-110-1	K20-HDA	D10-HDA	49-845	49-835
HDA-111-1	K20-HDA	D10-HDA	49-845	49-835
HDA-112-1	K12-HDA	D11-HDA		
HDA-113-2	K12-HDA	D11-HDA		
HDA-114-1	K20-HDA	D10-HDA	49-845	49-835
HDA-115-1	K20-HDA	D10-HDA	49-845	49-835
HDA-116	K20HDA	D10HDA	49-845	49-835
HDA-116-1	K20-HDA	D10-HDA	49-845	49-835
HDA-117-1	K20-HDA	D10-HDA	49-845	49-835
HDA-118	K20HDA	D10HDA	49-845	49-835
HDA-118-1	K20-HDA	D10-HDA	49-845	49-835
HDA-119-1	K20-HDA	D10-HDA	49-845	49-835
HDA-120-1	K20-HDA	D10-HDA	49-845	49-835
HDA-12-1	K20-HDA	D10-HDA	49-845	49-835
HDA-122-1	K20-HDA	D10-HDA	49-845	49-835
HDA-123-1	K23-HDA	D20-HDA		49-835
HDA-125-1	K20-HDA	D10-HDA	49-845	49-835
HDA-126-1	K20-HDA	D10-HDA	49-845	49-835
HDA-127-1	K10-HDA	D10-HDA		49-835
HDA-128-1	K20-HDA	D10-HDA	49-845	49-835
HDA-130-1	K20-HDA	D10-HDA	49-845	49-835
HDA-13-1	K20-HDA	D10-HDA	49-845	49-835
HDA-131-1	K20-HDA	D10-HDA	49-845	49-835
HDA-132-1	K23-HDA	D20-HDA		49-835
HDA-133-1	K20-HDA	D10-HDA	49-845	49-835
HDA-134-1	K12-HDA	D11-HDA		
HDA-135-1	K20-HDA	D10-HDA	49-845	49-835
HDA-136	K20HDA	D10HDA	49-845	49-835
HDA-136-1	K20-HDA	D10-HDA	49-845	49-835
HDA-137-1	K20-HDA	D10-HDA	49-845	49-835
HDA-138-1	K20-HDA	D10-HDA	49-845	49-835
HDA-139	K20HDA	D10HDA	49-845	49-835
HDA-139-1	K20-HDA	D10-HDA	49-845	49-835
HDA-140-1	K21-HDA	D10-HDA		49-835
HDA-14-1	K20-HDA	D10-HDA	49-845	49-835
HDA-141-1	K20-HDA	D10-HDA	49-845	49-835
HDA-142-1	K21-HDA	D10-HDA		49-835
HDA-143-1	K20-HDA	D10-HDA	49-845	49-835

OEM CARBURETOR			OREGON	
Model	Kit	Gaskets	Kit	Gaskets
Walbro				
HDA-144-1	K20-HDA	D10-HDA	49-845	49-835
HDA-145-1	K12-HDA	D11-HDA		
HDA-146-1	K20-HDA	D10-HDA	49-845	49-835
HDA-147-1	K12-HDA	D11-HDA		
HDA-148-1	K20-HDA	D10-HDA	49-845	49-835
HDA-149	K20HDA	D10HDA	49-845	49-835
HDA-150-1	K12-HDA	D11-HDA		
HDA-15-1	K22-HDA	D22-HDA	49-853	49-852
HDA-151-1	K12-HDA	D11-HDA		
HDA-153-1	K25-HDA			
HDA-154-1	K22-HDA	D22-HDA	49-853	49-852
HDA-155-1	K22-HDA	D22-HDA	49-853	49-852
HDA-156-1	K20-HDA	D10-HDA	49-845	49-835
HDA-157-1	K23-HDA	D20-HDA		49-835
HDA-158-1	K22-HDA	D22-HDA	49-853	49-852
HDA-159-1	K21-HDA	D10-HDA		49-835
HDA-160-1	K22-HDA	D22-HDA	49-853	49-852
HDA-162-1	K22-HDA	D22-HDA	49-853	49-852
HDA-164-1	K22-HDA	D22-HDA	49-853	49-852
HDA-165-1	K22-HDA	D22-HDA	49-853	49-852
HDA-166-1	K12-HDA	D11-HDA		
HDA-167-1	K12-HDA	D11-HDA		
HDA-168-1	K22-HDA	D22-HDA	49-853	49-852
HDA-169-1	K22-HDA	D22-HDA	49-853	49-852
HDA-170-1	K22-HDA	D22-HDA	49-853	49-852
HDA-17-1	K22-HDA	D22-HDA	49-853	49-852
HDA-171-1	K24-HDA	D24-HDA		
HDA-172-1	K22-HDA	D22-HDA	49-853	49-852
HDA-173-1	K22-HDA	D22-HDA	49-853	49-852
HDA-174-1	K24-HDA	D24-HDA		
HDA-175-1	K24-HDA	D24-HDA		
HDA-176-1	K20-HDA	D20-HDA	49-845	49-835
HDA-177-1	K20-HDA	D11-HDA	49-845	
HDA-178-1	K22-HDA	D22-HDA	49-853	49-852
HDA-179-1	K22-HDA	D22-HDA	49-853	49-852
HDA-180-1	K20-HDA	D20-HDA	49-845	49-835
HDA-18-1	K22-HDA	D22-HDA	49-853	49-852
HDA-181-1	K24-HDA	D24-HDA		
HDA-182-1	K24-HDA	D20-HDA		49-835
HDA-183-1	K20-HDA	D22-HDA	49-845	49-852
HDA-184-1	K20-HDA	D20-HDA	49-845	49-835
HDA-187-1	K22-HDA	D22-HDA	49-853	49-852
HDA-188-1	K22-HDA	D22-HDA	49-853	49-852
HDA-189-1	K25-HDA			
HDA-190-1	K24-HDA	D24-HDA		
HDA-19-1	K20-HDA	D10-HDA	49-845	49-835
HDA-191-1	K24-HDA	D24-HDA		
HDA-192-1	K22-HDA	D22-HDA	49-853	49-852
HDA-193-1	K22-HDA	D22-HDA	49-853	49-852
HDA-195-1	K22-HDA	D22-HDA	49-853	49-852
HDA-196-1	K22-HDA	D22-HDA	49-853	49-852
HDA-197-1	K23-HDA	D20-HDA		49-835
HDA-198-1	K24-HDA	D24-HDA		
HDA-199-1	K24-HDA	D24-HDA		
HDA-20-1	K20-HDA	D10-HDA	49-845	49-835
HDA-201-1	K12-HDA	D11-HDA		
HDA-202-1	K12-HDA	D11-HDA		
HDA-203-1	K12-HDA	D11-HDA		
HDA-204-1	K12-HDA	D11-HDA		
HDA-205-1	K22-HDA	D22-HDA	49-853	49-852
HDA-206-1	K12-HDA	D11-HDA		
HDA-207-1	K12-HDA	D11-HDA		
HDA-208-1	K21-HDA	D11-HDA		
HDA-209-1	K12-HDA	D11-HDA		
HDA-210-1	K20-HDA	D11-HDA	49-845	
HDA-21-1	K20-HDA	D10-HDA	49-845	49-835
HDA-211-1	K21-HDA	D14-HDA		
HDA-212-1	K21-HDA	D14-HDA		
HDA-213-1	K13-HDA	D11-HDA		
HDA-214-1	K21-HDA	D13-HDA		
HDA-215-1	K20-HDA	D20-HDA	49-845	49-835
HDA-216-1	K20-HDA	D20-HDA	49-845	49-835
HDA-217-1	K21-HDA	D14-HDA		
HDA-218-1	K20-HDA	D20-HDA	49-845	49-835
HDA-219-1	K21-HDA	D13-HDA		
HDA-220-1	K20-HDA	D11-HDA	49-845	
HDA-22-1	K20-HDA	D10-HDA	49-845	49-835
HDA-221-1	K20-HDA	D13-HDA	49-845	

OEM CARBURETOR			OREGON	
Model	Kit	Gaskets	Kit	Gaskets
Walbro				
HDA-222-1	K21-HDA	D20-HDA		49-835
HDA-223-1	K20-HDA	D20-HDA	49-845	49-835
HDA-224-1	K20-HDA	D20-HDA	49-845	49-835
HDA-225-1	K20-HDA	D20-HDA	49-845	49-835
HDA-226-1	K20-HDA	D20-HDA	49-845	49-835
HDA-227-1	K20-HDA	D20-HDA	49-845	49-835
HDA-228-1	K20-HDA	D20-HDA	49-845	49-835
HDA-229-1	K20-HDA	D20-HDA	49-845	49-835
HDA-230-1	K20-HDA	D20-HDA	49-845	49-835
HDA-23-1	K20-HDA	D10-HDA	49-845	49-835
HDA-231-1	K20-HDA	D20-HDA	49-845	49-835
HDA-232-1	K20-HDA	D20-HDA	49-845	49-835
HDA-233-1	K20-HDA	D11-HDA	49-845	
HDA-234-1	K20-HDA	D11-HDA	49-845	
HDA-235-1	K20-HDA	D20-HDA	49-845	49-835
HDA-236-1	K20-HDA	D11-HDA	49-845	
HDA-238-1	K20-HDA	D11-HDA	49-845	
HDA-239-1	K20-HDA	D11-HDA	49-845	
HDA-24-1	K20-HDA	D10-HDA	49-845	49-835
HDA-244-1	K20-HDA	D11-HDA	49-845	
HDA-246-1	K20-HDA	D11-HDA	49-845	
HDA-248-1	K20-HDA	D11-HDA	49-845	
HDA-255-1	K21-HDA	D20-HDA		49-835
HDA-256-1	K21-HDA	D20-HDA		49-835
HDA-258-1	K20-HDA	D20-HDA	49-845	49-835
HDA-26-1	K12-HDA	D11-HDA		
HDA-268-1	K20-HDA	D20-HDA	49-845	49-835
HDA-269-1	K20-HDA	D20-HDA	49-845	49-835
HDA-27-1	K20-HDA	D10-HDA	49-845	49-835
HDA-271-1	K20-HDA	D20-HDA	49-845	49-835
HDA-272-1	K20-HDA	D20-HDA	49-845	49-835
HDA-274-1	K20-HDA	D20-HDA	49-845	49-835
HDA-275-1	K22-HDA		49-853	
HDA-28-1	K20-HDA	D10-HDA	49-845	49-835
HDA-285-1	K20-HDA	D20-HDA	49-845	49-835
HDA-286-1	K27-HDA	D20-HDA		49-835
HDA-29-1	K20-HDA	D10-HDA	49-845	49-835
HDA-297-1	K20-HDA		49-845	
HDA-30-1	K20-HDA	D10-HDA	49-845	49-835
HDA-301-1	K20-HDA		49-845	
HDA-308-1	K27-HDA			
HDA-3-1	K20-HDA	D10-HDA	49-845	
HDA-31-1	K22-HDA	D22-HDA	49-853	49-852
HDA-32-1	K22-HDA	D22-HDA	49-853	49-852
HDA-33-1	K20-HDA	D10-HDA	49-845	49-835
HDA-34-1	K20-HDA	D10-HDA	49-845	49-835
HDA-35-1	K20-HDA	D10-HDA	49-845	49-835
HDA-36-1	K20-HDA	D10-HDA	49-845	49-835
HDA-40-1	K20-HDA	D10-HDA	49-845	49-835
HDA-41-1	K20-HDA	D10-HDA	49-845	49-835
HDA-42-1	K20-HDA	D10-HDA	49-845	49-835
HDA-43-1	K20-HDA	D10-HDA	49-845	49-835
HDA-44-1	K12-HDA	D11-HDA		
HDA-45-1	K20-HDA	D10-HDA	49-845	49-835
HDA-46-1	K20-HDA	D10-HDA	49-845	49-835
HDA-47-1	K20-HDA	D10-HDA	49-845	49-835
HDA-48-1	K20-HDA	D10-HDA	49-845	49-835
HDA-49-1	K20-HDA	D10-HDA	49-845	49-835
HDA-50-1	K20-HDA	D10-HDA	49-845	49-835
HDA-51-1	K12-HDA	D11-HDA		
HDA-52-1	K20-HDA	D10-HDA	49-845	49-835
HDA-53-1	K12-HDA	D11-HDA		
HDA-54-1	K22-HDA	D22-HDA	49-853	49-852
HDA-55-1	K20-HDA	D10-HDA	49-845	49-835
HDA-56-1	K22-HDA	D22-HDA	49-853	49-852
HDA-57-1	K20-HDA	D10-HDA	49-845	49-835
HDA-58-1	K20-HDA	D10-HDA	49-845	49-835
HDA-59-1	K20-HDA	D10-HDA	49-845	49-835
HDA-60-1	K20-HDA	D10-HDA	49-845	49-835
HDA-6-1	K20-HDA	D10-HDA	49-845	49-835
HDA-61-1	K20-HDA	D10-HDA	49-845	49-835
HDA-62-1	K12-HDA	D11-HDA		
HDA-63-1	K20-HDA	D10-HDA	49-845	49-835
HDA-64-1	K20-HDA	D10-HDA	49-845	49-835
HDA-66-1	K20-HDA	D10-HDA	49-845	49-835
HDA-67-1	K22-HDA	D22-HDA	49-853	49-852
HDA-68-1	K22-HDA	D22-HDA	49-853	49-852
HDA-69-1	K22-HDA	D22-HDA	49-853	49-852

C

OEM CARBURETOR			OREGON	
Model	Kit	Gaskets	Kit	Gaskets
Walbro				
HDA-70-1	K12-HDA	D11-HDA		
HDA-7-1	K22-HDA	D22-HDA	49-853	49-852
HDA-71-1	K20-HDA	D10-HDA	49-845	49-835
HDA-72-1	K20-HDA	D10-HDA	49-845	49-835
HDA-73-1	K22-HDA	D22-HDA	49-853	49-852
HDA-74-1	K20-HDA	D10-HDA	49-845	49-835
HDA-75-1	K20-HDA	D10-HDA	49-845	49-835
HDA-75X-1	K20-HDA	D10-HDA	49-845	49-835
HDA-76-1	K20-HDA	D10-HDA	49-845	49-835
HDA-77-1	K22-HDA	D22-HDA	49-853	49-852
HDA-79-1	K23-HDA	D20-HDA		49-835
HDA-80-1	K12-HDA	D11-HDA		
HDA-82-1	K12-HDA	D11-HDA		
HDA-83-1	K20-HDA	D10-HDA	49-845	49-835
HDA-84-1	K22-HDA	D22-HDA	49-853	49-852
HDA-85-1	K12-HDA	D11-HDA		
HDA-86-1	K22-HDA	D22-HDA	49-853	49-852
HDA-87-1	K22-HDA	D22-HDA	49-853	49-852
HDA-88-1	K22-HDA	D22-HDA	49-853	49-852
HDA-89-1	K12-HDA	D11-HDA		
HDA-90-1	K12-HDA	D11-HDA		
HDA-92-1	K22-HDA	D22-HDA	49-853	49-852
HDA-93-1	K22-HDA	D22-HDA	49-853	49-852
HDA-95-1	K12-HDA	D11-HDA		
HDA-96-1	K22-HDA	D22-HDA	49-853	49-852
HDA-97-1	K12-HDA	D11-HDA		
HDA-98-1	K22-HDA	D22-HDA	49-853	49-852
HDA-99-1	K22-HDA	D22-HDA	49-853	49-852
HDB-10-1	K10-HDB	D10-HDB	49-832	49-806
HDB-1-1	K10-HDB	D10-HDB	49-832	49-806
HDB-11-1	K10-HDB	D10-HDB	49-832	49-806
HDB-12-1	K10-HDB	D10-HDB	49-832	49-806
HDB-13-1	K10-HDB	D10-HDB	49-832	49-806
HDB-17-1	K10-HDB	D10-HDB	49-832	49-806
HDB-18-1	K10-HDB	D10-HDB	49-832	49-806
HDB-19-1	K10-HDB	D10-HDB	49-832	49-806
HDB-2-1	K10-HDB	D10-HDB	49-832	49-806
HDB-3-1	K10-HDB	D10-HDB	49-832	49-806
HDB-4-1	K10-HDB	D10-HDB	49-832	49-806
HDB-5-1	K10-HDB	D10-HDB	49-832	49-806
HDB-6-1	K10-HDB	D10-HDB	49-832	49-806
HDB-7-1	K10-HDB	D10-HDB	49-832	49-806
HDB-8-1	K10-HDB	D10-HDB	49-832	49-806
HDB-9-1	K10-HDB	D10-HDB	49-832	49-806
HDC-1-1	K10-HDC	D10-HDC	49-833	49-807
HDC-15-1	K10-HDC	D10-HDC	49-833	49-807
HDC-16-1	K10-HDC	D10-HDC	49-833	49-807
HDC-17-1	K10-HDC	D10-HDC	49-833	49-807
HDC-20-1	K10-HDC	D10-HDC	49-833	49-807
HDC-2-1	K10-HDC	D10-HDC	49-833	49-807
HDC-21-1	K10-HDC	D10-HDC	49-833	49-807
HDC-23-1	K10-HDC	D10-HDC	49-833	49-807
HDC-26-1	K10-HDC	D10-HDC	49-833	49-807
HDC-27-1	K10-HDC	D10-HDC	49-833	49-807
HDC-28-1	K10-HDC	D10-HDC	49-833	49-807
HDC-29-1	K10-HDC	D10-HDC	49-833	49-807
HDC-3-1	K10-HDC	D10-HDC	49-833	49-807
HDC-32-1	K10-HDC	D10-HDC	49-833	49-807
HDC-33-1	K10-HDC	D10-HDC	49-833	49-807
HDC-35-1	K10-HDC	D10-HDC	49-833	49-807
HDC-37-1	K10-HDC	D10-HDC	49-833	49-807
HDC-39-1	K10-HDC	D10-HDC	49-833	49-807
HDC-40-1	K10-HDC	D10-HDC	49-833	49-807
HDC-4-1	K10-HDC	D10-HDC	49-833	49-807
HDC-41-1	K10-HDC	D10-HDC	49-833	49-807
HDC-42-1	K10-HDC	D10-HDC	49-833	49-807
HDC-44-1	K10-HDC	D10-HDC	49-833	49-807
HDC-45-1	K10-HDC	D10-HDC	49-833	49-807
HDC-46-1	K10-HDC	D10-HDC	49-833	49-807
HDC-47-1	K10-HDC	D10-HDC	49-833	49-807
HDC-48-1	K10-HDC	D10-HDC	49-833	49-807
HDC-49-1	K10-HDC	D10-HDC	49-833	49-807
HDC-50-1	K10-HDC	D10-HDC	49-833	49-807
HDC-51-1	K10-HDC	D10-HDC	49-833	49-807
HDC-52-1	K10-HDC	D10-HDC	49-833	49-807
HDC-54-1	K10-HDC	D10-HDC	49-833	49-807
HDC-55-1	K10-HDC	D10-HDC	49-833	49-807

OEM CARBURETOR			OREGON	
Model	Kit	Gaskets	Kit	Gaskets
Walbro				
HDC-57-1	K10-HDC	D10-HDC	49-833	49-807
HDC-58-1	K10-HDC	D10-HDC	49-833	49-807
HDC-59-1	K10-HDC	D10-HDC	49-833	49-807
HDC-63-1	K10-HDC	D10-HDC	49-833	49-807
HDC-64-1	K10-HDC	D10-HDC	49-833	49-807
HDC-65-1	K10-HDC	D10-HDC	49-833	49-807
HDC-66-1	K10-HDC	D10-HDC	49-833	49-807
HDC-67-1	K10-HDC	D10-HDC	49-833	49-807
HDC-68-1	K10-HDC	D10-HDC	49-833	49-807
HDC-69-1	K10-HDC	D10-HDC	49-833	49-807
HDC-70-1	K10-HDC	D10-HDC	49-833	49-807
HDC-72-1	K10-HDC	D10-HDC	49-833	49-807
HDC-73-1	K10-HDC	D10-HDC	49-833	49-807
HDC-74-1	K10-HDC	D10-HDC	49-833	49-807
HDC-75-1	K10-HDC	D10-HDC	49-833	49-807
HDC-76-1	K10-HDC	D10-HDC	49-833	49-807
HDC-77-1	K10-HDC	D10-HDC	49-833	49-807
HDC-78-1	K10-HDC	D10-HDC	49-833	49-807
HDC-80-1	K10-HDC	D10-HDC	49-833	49-807
HDC-81-1	K10-HDC	D10-HDC	49-833	49-807
LMB-118-1	K1-LMB	G1-LM	49-201	
LMB-166-1	K1-LMB	G1-LM	49-201	
LMB-167-1	K1-LMB	G1-LM	49-201	
LMB-182-1	K1-LMB	G1-LM	49-201	
LMB-195-1	K3-LMB	G1-LM	49-201	
LMB-206-1	K3-LMB	G1-LM	49-201	
LMB-215-1	K5-LMB	G1-LM	49-201	
LMB-216-1	K3-LMB	G1-LM	49-201	
LMB-218-1	K3-LMB	G1-LM	49-201	
LMB-224-1	K1-LMB	G1-LM	49-201	
LMB-229-1	K5-LMB	G1-LM	49-201	
SDC-1-1	K10-SDC	D10-SDC	49-834	49-810
SDC-16-1	K10-SDC	D10-SDC	49-834	49-810
SDC-18-1	K10-SDC	D10-SDC	49-834	49-810
SDC-2-1	K10-SDC	D10-SDC	49-834	49-810
SDC-29-1	K10-SDC	D10-SDC	49-834	49-810
SDC-3-1	K10-SDC	D10-SDC	49-834	49-810
SDC-31-1	K10-SDC	D10-SDC	49-834	49-810
SDC-33-1	K10-SDC	D10-SDC	49-834	49-810
SDC-37-1	K10-SDC	D10-SDC	49-834	49-810
SDC-38-1	K10-SDC	D10-SDC	49-834	49-810
SDC-40-1	K10-SDC	D10-SDC	49-834	49-810
SDC-41-1	K10-SDC	D10-SDC	49-834	49-810
SDC-43-1	K10-SDC	D10-SDC	49-834	49-810
SDC-44-1	K10-SDC	D10-SDC	49-834	49-810
SDC-48-1	K10-SDC	D10-SDC	49-834	49-810
SDC-49-1	K10-WAT	D10-WAT	49-816	49-812
SDC-50-1	K10-SDC	D10-SDC	49-834	49-810
SDC-51-1	K10-SDC	D10-SDC	49-834	49-810
SDC-52-1	K10-SDC	D10-SDC	49-834	49-810
SDC-53-1	K10-SDC	D10-SDC	49-834	49-810
SDC-54-1	K10-SDC	D10-SDC	49-834	49-810
SDC-58-1	K10-SDC	D10-SDC	49-834	49-810
SDC-60-1	K10-SDC	D10-SDC	49-834	49-810
SDC-62-1	K10-SDC	D10-SDC	49-834	49-810
SDC-65-1	K10-SDC	D10-SDC	49-834	49-810
SDC-68-1	K10-SDC	D10-SDC	49-834	49-810
SDC-69-1	K10-SDC	D10-SDC	49-834	49-810
SDC-70-1	K10-SDC	D10-SDC	49-834	49-810
SDC-71-1	K10-SDC	D10-SDC	49-834	49-810
SDC-73-1	K10-SDC	D10-SDC	49-834	49-810
SDC-74-1	K10-SDC	D10-SDC	49-834	49-810
SDC-76-1	K10-SDC	D10-SDC	49-834	49-810
SDC-77-1	K10-SDC	D10-SDC	49-834	49-810
SDC-78-1	K10-SDC	D10-SDC	49-834	49-810
SDC-79-1	K10-SDC	D10-SDC	49-834	49-810
SDC-80-1	K10-SDC	D10-SDC	49-834	49-810
SDC-8-1	K10-SDC	D10-SDC	49-834	49-810
SDC-81-1	K10-SDC	D10-SDC	49-834	49-810
SDC-82-1	K10-SDC	D10-SDC	49-834	49-810
SDC-83-1	K10-SDC	D10-SDC	49-834	49-810
SDC-84-1	K10-SDC	D10-SDC	49-834	49-810
SDC-85-1	K10-SDC	D10-SDC	49-834	49-810
SDC-86-1	K10-SDC	D10-SDC	49-834	49-810
SDC-87-1	K10-SDC	D10-SDC	49-834	49-810
SDC-88-1	K10-SDC	D10-SDC	49-834	49-810
SDC-89-1	K10-SDC	D10-SDC	49-834	49-810

OEM CARBURETOR			OREGON	
Model	Kit	Gaskets	Kit	Gaskets
Walbro				
WA-100-1	K20-WAT	D20-WAT	49-831	49-812
WA-101-1	K10-WAT	D10-WAT	49-816	49-812
WA-102-1	K10-WAT	D10-WAT	49-816	49-812
WA-103-1	K10-WAT	D10-WAT	49-816	49-812
WA-105-1	K10-WAT	D10-WAT	49-816	49-812
WA-106-1	K10-WAT	D10-WAT	49-816	49-812
WA-107-1	K10-WAT	D10-WAT	49-816	49-812
WA-108-1	K10-WAT	D10-WAT	49-816	49-812
WA-1-1	K10-WAT	D10-WAT	49-816	49-812
WA-110-1	K10-WAT	D10-WAT	49-816	49-812
WA-112-1	K10-WAT	D10-WAT	49-816	49-812
WA-113-1	K10-WAT	D10-WAT	49-816	49-812
WA-114-1	K10-WAT	D10-WAT	49-816	49-812
WA-115-1	K10-WAT	D10-WAT	49-816	49-812
WA-118-1	K10-WAT	D10-WAT	49-816	49-812
WA-120-1	K10-WAT	D10-WAT	49-816	49-812
WA-12-1	K10-WAT	D10-WAT	49-816	49-812
WA-121-1	K10-WAT	D10-WAT	49-816	49-812
WA-123-1	K10-WAT	D10-WAT	49-816	49-812
WA-124-1	K10-WAT	D10-WAT	49-816	49-812
WA-125-1	K10-WAT	D10-WAT	49-816	49-812
WA-126-1	K10-WAT	D10-WAT	49-816	49-812
WA-127-1	K10-WAT	D10-WAT	49-816	49-812
WA-128-1	K10-WAT	D10-WAT	49-816	49-812
WA-130-1	K10-WAT	D10-WAT	49-816	49-812
WA-131-1	K10-WAT	D10-WAT	49-816	49-812
WA-132-1	K10-WAT	D10-WAT	49-816	49-812
WA-133-1	K10-WAT	D10-WAT	49-816	49-812
WA-134-1	K10-WAT	D10-WAT	49-816	49-812
WA-135-1	K10-WAT	D10-WAT	49-816	49-812
WA-136-1	K10-WAT	D10-WAT	49-816	49-812
WA-137-1	K10-WAT	D10-WAT	49-816	49-812
WA-138-1	K10-WAT	D10-WAT	49-816	49-812
WA-139-1	K10-WAT	D10-WAT	49-816	49-812
WA-140-1	K10-WAT	D10-WAT	49-816	49-812
WA-141-1	K10-WAT	D10-WAT	49-816	49-812
WA-142-1	K10-WAT	D10-WAT	49-816	49-812
WA-143-1	K10-WAT	D10-WAT	49-816	49-812
WA-144-1	K10-WAT	D10-WAT	49-816	49-812
WA-145-1	K10-WAT	D10-WAT	49-816	49-812
WA-146-1	K10-WAT	D10-WAT	49-816	49-812
WA-148-1	K10-WAT	D10-WAT	49-816	49-812
WA-149-1	K10-WAT	D10-WAT	49-816	49-812
WA-150-1	K10-WAT	D10-WAT	49-816	49-812
WA-151-1	K10-WAT	D10-WAT	49-816	49-812
WA-153-1	K10-WAT	D10-WAT	49-816	49-812
WA-154-1	K10-WAT	D10-WAT	49-816	49-812
WA-155-1	K10-WAT	D10-WAT	49-816	49-812
WA-157-1	K10-WAT	D10-WAT	49-816	49-812
WA-158-1	K10-WAT	D10-WAT	49-816	49-812
WA-159-1	K10-WAT	D10-WAT	49-816	49-812
WA-160-1	K10-WAT	D10-WAT	49-816	49-812
WA-161-1	K10-WAT	D10-WAT	49-816	49-812
WA-162-1	K10-WAT	D10-WAT	49-816	49-812
WA-163-1	K10-WAT	D10-WAT	49-816	49-812
WA-164-1	K10-WAT	D10-WAT	49-816	49-812
WA-165-1	K10-WAT	D10-WAT	49-816	49-812
WA-166-1	K10-WAT	D10-WAT	49-816	49-812
WA-167-1	K10-WAT	D10-WAT	49-816	49-812
WA-168-1	K10-WAT	D10-WAT	49-816	49-812
WA-169-1	K10-WAT	D10-WAT	49-816	49-812
WA-170-1	K10-WAT	D10-WAT	49-816	49-812
WA-171-1	K10-WAT	D10-WAT	49-816	49-812
WA-173-1	K10-WAT	D10-WAT	49-816	49-812
WA-174-1	K10-WAT	D10-WAT	49-816	49-812
WA-175-1	K10-WAT	D10-WAT	49-816	49-812
WA-177-1	K10-WAT	D10-WAT	49-816	49-812
WA-178-1	K10-WAT	D10-WAT	49-816	49-812
WA-179-1	K10-WAT	D10-WAT	49-816	49-812
WA-180-1	K10-WAT	D10-WAT	49-816	49-812
WA-181-1	K10-WAT	D10-WAT	49-816	49-812
WA-182-1	K10-WAT	D10-WAT	49-816	49-812
WA-183-1	K10-WAT	D10-WAT	49-816	49-812
WA-184-1	K10-WAT	D10-WAT	49-816	49-812
WA-185	K10WAT	D10WAT	49-816	49-812
WA-185-1	K10-WAT	D10-WAT	49-816	49-812
WA-186-1	K10-WAT	D10-WAT	49-816	49-812

Carburetor Kit Reference

OEM CARBURETOR			OREGON	
Model	Kit	Gaskets	Kit	Gaskets
Walbro				
WA-187-1	K10-WAT	D10-WAT	49-816	49-812
WA-188-1	K10-WAT	D10-WAT	49-816	49-812
WA-189-1	K10-WAT	D10-WAT	49-816	49-812
WA-190-1	K10-WAT	D10-WAT	49-816	49-812
WA-19-1	K10-WAT	D10-WAT	49-816	49-812
WA-191-1	K10-WAT	D10-WAT	49-816	49-812
WA-192-1	K10-WAT	D10-WAT	49-816	49-812
WA-193-1	K10-WAT	D10-WAT	49-816	49-812
WA-194-1	K10-WAT	D10-WAT	49-816	49-812
WA-195-1	K10-WAT	D10-WAT	49-816	49-812
WA-196-1	K10-WAT	D10-WAT	49-816	49-812
WA-197-1	K10-WAT	D10-WAT	49-816	49-812
WA-198-1	K20-WAT	D20-WAT	49-831	49-812
WA-199-1	K10-WAT	D10-WAT	49-816	49-812
WA-200-1	K10-WAT	D10-WAT	49-816	49-812
WA-201-1	K10-WAT	D10-WAT	49-816	49-812
WA-202-1	K10-WAT	D10-WAT	49-816	49-812
WA-203-1	K10-WAT	D10-WAT	49-816	49-812
WA-204-1	K10-WAT	D10-WAT	49-816	49-812
WA-205-1	K10-WAT	D10-WAT	49-816	49-812
WA-206-1	K10-WAT	D10-WAT	49-816	49-812
WA-207-1	K20-WAT	D20-WAT	49-831	49-812
WA-208-1	K10-WAT	D10-WAT	49-816	49-812
WA-209-1	K10-WAT	D10-WAT	49-816	49-812
WA-2-1	K10-WAT	D10-WAT	49-816	49-812
WA-210-1	K10-WAT	D10-WAT	49-816	49-812
WA-21-1	K10-WAT	D10-WAT	49-816	49-812
WA-212-1	K10-WAT	D10-WAT	49-816	49-812
WA-213-1	K10-WAT	D10-WAT	49-816	49-812
WA-214-1	K20-WAT	D20-WAT	49-831	49-812
WA-215-1	K20-WAT	D20-WAT	49-831	49-812
WA-216-1	K20-WAT	D20-WAT	49-831	49-812
WA-217-1	K20-WAT	D20-WAT	49-831	49-812
WA-218-1	K20-WAT	D20-WAT	49-831	49-812
WA-219-1	K20-WAT	D20-WAT	49-831	49-812
WA-22-1	K10-WAT	D10-WAT	49-816	49-812
WA-221-1	K20-WAT	D20-WAT	49-831	49-812
WA-222-1	K10-WAT	D10-WAT	49-816	49-812
WA-223-1	K20-WAT	D20-WAT	49-831	49-812
WA-224-1	K20-WAT	D20-WAT	49-831	49-812
WA-225-1	K23-WAT	D23-WAT		
WA-226-1	K20-WAT	D20-WAT	49-831	49-812
WA-227-1	K20-WAT	D20-WAT	49-831	49-812
WA-228-1	K23-WAT	D23-WAT		
WA-229-1	K20-WAT	D20-WAT	49-831	49-812
WA-230-1	K10-WAT	D10-WAT	49-816	49-812
WA-231-1	K20-WAT	D20-WAT	49-831	49-812
WA-25-1	K10-WAT	D10-WAT	49-816	49-812
WA-27-1	K10-WAT	D10-WAT	49-816	49-812
WA-28-1	K10-WAT	D10-WAT	49-816	49-812
WA-32-1	K10-WAT	D10-WAT	49-816	49-812
WA-33-1	K10-WAT	D10-WAT	49-816	49-812
WA-34-1	K10-WAT	D10-WAT	49-816	49-812
WA-38-1	K10-WAT	D10-WAT	49-816	49-812
WA-39-1	K10-WAT	D10-WAT	49-816	49-812
WA-40-1	K10-WAT	D10-WAT	49-816	49-812
WA-42-1	K10-WAT	D10-WAT	49-816	49-812
WA-44-1	K10-WAT	D10-WAT	49-816	49-812
WA-45-1	K10-WAT	D10-WAT	49-816	49-812
WA-46-1	K10-WAT	D10-WAT	49-816	49-812
WA-49-1	K10-WAT	D10-WAT	49-816	49-812
WA-50-1	K10-WAT	D10-WAT	49-816	49-812
WA-5-1	K10-WAT	D10-WAT	49-816	49-812
WA-51-1	K10-WAT	D10-WAT	49-816	49-812
WA-52-1	K10-WAT	D10-WAT	49-816	49-812
WA-53-1	K10-WAT	D10-WAT	49-816	49-812
WA-54-1	K10-WAT	D10-WAT	49-816	49-812
WA-55-1	K10-WAT	D10-WAT	49-816	49-812
WA-56-1	K10-WAT	D10-WAT	49-816	49-812
WA-58-1	K10-WAT	D10-WAT	49-816	49-812
WA-59-1	K10-WAT	D10-WAT	49-816	49-812
WA-59R-1	K10-WAT	D10-WAT	49-816	49-812
WA-62-1	K10-WAT	D10-WAT	49-816	49-812
WA-63-1	K10-WAT	D10-WAT	49-816	49-812
WA-64-1	K10-WAT	D10-WAT	49-816	49-812
WA-65-1	K10-WAT	D10-WAT	49-816	49-812
WA-66-1	K10-WAT	D10-WAT	49-816	49-812
WA-68-1	K10-WAT	D10-WAT	49-816	49-812

OEM CARBURETOR			OREGON	
Model	Kit	Gaskets	Kit	Gaskets
Walbro				
WA-7-1	K10-WAT	D10-WAT	49-816	49-812
WA-73-1	K10-WAT	D10-WAT	49-816	49-812
WA-74-1	K10-WAT	D10-WAT	49-816	49-812
WA-75-1	K10-WAT	D10-WAT	49-816	49-812
WA-78-1	K10-WAT	D10-WAT	49-816	49-812
WA-79-1	K10-WAT	D10-WAT	49-816	49-812
WA-80-1	K10-WAT	D10-WAT	49-816	49-812
WA-8-1	K10-WAT	D10-WAT	49-816	
WA-81-1	K10-WAT	D10-WAT	49-816	49-812
WA-82-1	K10-WAT	D10-WAT	49-816	49-812
WA-83-1	K10-WAT	D10-WAT	49-816	49-812
WA-84-1	K10-WAT	D10-WAT	49-816	49-812
WA-85-1	K10-WAT	D10-WAT	49-816	49-812
WA-86-1	K10-WAT	D10-WAT	49-816	49-812
WA-87-1	K10-WAT	D10-WAT	49-816	49-812
WA-89-1	K10-WAT	D10-WAT	49-816	49-812
WA-90-1	K10-WAT	D10-WAT	49-816	49-812
WA-91-1	K10-WAT	D10-WAT	49-816	49-812
WA-92-1	K10-WAT	D10-WAT	49-816	49-812
WA-93-1	K10-WAT	D10-WAT	49-816	49-812
WA-94-1	K10-WAT	D10-WAT	49-816	49-812
WA-95-1	K10-WAT	D10-WAT	49-816	49-812
WA-96-1	K10-WAT	D10-WAT	49-816	49-812
WA-97-1	K10-WAT	D10-WAT	49-816	49-812
WA-98-1	K10-WAT	D10-WAT	49-816	49-812
WA-99-1	K10-WAT	D10-WAT	49-816	49-812
WB-10-1	K10-WB	D10-WB	49-872	
WB-11-1	K10-WB	D10-WB	49-872	
WB-12-1	K10-WB	D10-WB	49-872	
WB-13-1	K10-WB	D10-WB	49-872	
WB-17-1	K10-WB	D10-WB	49-872	
WB-18-1	K10-WB	D10-WB	49-872	
WB-19-1	K10-WB	D10-WB	49-872	
WB-20-1	K10-WB	D10-WB	49-872	
WB-2-1	K10-WB	D10-WB	49-872	
WB-21-1	K10-WB	D10-WB	49-872	
WB-24-1	K11-WB	D11-WB		
WB-25-1	K11-WB	D11-WB		
WB-26-1	K10-WB	D10-WB	49-872	
WB-27-1	K10-WB	D10-WB	49-872	
WB-28-1	K10-WB	D10-WB	49-872	
WB-29-1	K10-WB	D10-WB	49-872	
WB-30-1	K10-WB	D10-WB	49-872	
WB-3-1	K13-WB	D13-WB		
WB-31-1	K10-WB	D10-WB	49-872	
WB-32-1	K11-WB	D11-WB		
WB-33-1	K12-WB	D12-WB		
WB-34-1	K10-WB	D10-WB	49-872	
WB-35-1	K12-WB	D12-WB		
WB-36-1	K10-WB	D10-WB	49-872	
WB-37-1	K10-WB	D10-WB	49-872	
WB-39-1	K10-WB	D10-WB	49-872	
WB-40-1	K10-WB	D10-WB	49-872	
WB-4-1	K10-WB	D10-WB	49-872	
WB-41-1	K10-WB	D10-WB	49-872	
WB-42-1	K10-WB	D10-WB	49-872	
WB-44-1	K10-WB	D10-WB	49-872	
WB-45-1	K10-WB	D10-WB	49-872	
WB-46-1	K10-WB	D10-WB	49-872	
WB-6-1	K10-WB	D10-WB	49-872	
WB-8-1	K10-WB	D10-WB	49-872	
WJ-100-1	K10-WJ	D10-WJ	49-873	49-843
WJ-10-1	K10-WJ	D10-WJ	49-873	49-843
WJ-101-1	K15-WJ	D10-WJ		49-843
WJ-104-1	K10-WJ	D10-WJ	49-873	49-843
WJ-105-1	K10-WJ	D10-WJ	49-873	49-843
WJ-106-1	K15-WJ	D10-WJ		49-843
WJ-109-1	K15-WJ	D10-WJ		49-843
WJ-1-1	K10-WJ	D10-WJ	49-873	49-843
WJ-110-1	K15-WJ	D10-WJ		49-843
WJ-11-1	K10-WJ	D10-WJ	49-873	49-843
WJ-111-1	K10-WJ	D10-WJ	49-873	49-843
WJ-115-1	K15-WJ	D10-WJ		49-843
WJ-116-1	K15-WJ	D10-WJ		49-843
WJ-117-1	K15-WJ	D10-WJ		49-843
WJ-118-1	K15-WJ	D10-WJ		49-843
WJ-119-1	K15-WJ	D10-WJ		49-843
WJ-12-1	K10-WJ	D10-WJ	49-873	49-843

OEM CARBURETOR			OREGON	
Model	Kit	Gaskets	Kit	Gaskets
Walbro				
WJ-121-1	K15-WJ	D10-WJ		49-843
WJ-122-1	K15-WJ	D10-WJ		49-843
WJ-123-1	K15-WJ	D10-WJ		49-843
WJ-124-1	K15-WJ			49-843
WJ-126-1	K10-WJ	D10-WJ	49-873	49-843
WJ-13-1	K10-WJ	D10-WJ	49-873	49-843
WJ-15-1	K10-WJ	D10-WJ	49-873	49-843
WJ-16-1	K10-WJ	D10-WJ	49-873	49-843
WJ-17-1	K10-WJ	D10-WJ	49-873	49-843
WJ-18-1	K10-WJ	D10-WJ	49-873	49-843
WJ-19-1	K10-WJ	D10-WJ	49-873	49-843
WJ-20-1	K10-WJ	D10-WJ	49-873	49-843
WJ-2-1	K10-WJ	D10-WJ	49-873	49-843
WJ-21-1	K10-WJ	D10-WJ	49-873	49-843
WJ-22-1	K10-WJ	D10-WJ	49-873	49-843
WJ-23-1	K10-WJ	D10-WJ	49-873	49-843
WJ-24-1	K10-WJ	D10-WJ	49-873	49-843
WJ-25-1	K10-WJ	D10-WJ	49-873	49-843
WJ-26-1	K10-WJ	D10-WJ	49-873	49-843
WJ-27-1	K10-WJ	D10-WJ	49-873	49-843
WJ-28-1	K10-WJ	D10-WJ	49-873	49-843
WJ-29-1	K10-WJ	D10-WJ	49-873	49-843
WJ-30-1	K10-WJ	D10-WJ	49-873	49-843
WJ-3-1	K10-WJ	D10-WJ	49-873	49-843
WJ-31-1	K10-WJ	D10-WJ	49-873	49-843
WJ-32-1	K10-WJ	D10-WJ	49-873	49-843
WJ-33-1	K10-WJ	D10-WJ	49-873	49-843
WJ-34-1	K10-WJ	D10-WJ	49-873	49-843
WJ-35-1	K10-WJ	D10-WJ	49-873	49-843
WJ-36-1	K10-WJ	D10-WJ	49-873	49-843
WJ-37-1	K10-WJ	D10-WJ	49-873	49-843
WJ-38-1	K10-WJ	D10-WJ	49-873	49-843
WJ-39-1	K10-WJ	D10-WJ	49-873	49-843
WJ-40-1	K10-WJ	D10-WJ	49-873	49-843
WJ-4-1	K10-WJ	D10-WJ	49-873	49-843
WJ-41-1	K10-WJ	D10-WJ	49-873	49-843
WJ-42	K10-WJ	D10-WJ	49-873	49-843
WJ-44-1	K15-WJ	D10-WJ		49-843
WJ-45-1	K10-WJ	D10-WJ	49-873	49-843
WJ-46-1	K10-WJ	D10-WJ	49-873	49-843
WJ-47-1	K10-WJ	D10-WJ	49-873	49-843
WJ-48-1	K10-WJ	D10-WJ	49-873	49-843
WJ-49-1	K10-WJ	D10-WJ	49-873	49-843
WJ-50-1	K10-WJ	D10-WJ	49-873	49-843
WJ-5-1	K10-WJ	D10-WJ	49-873	49-843
WJ-52	K10-WJ	D10-WJ	49-873	49-843
WJ-54-1	K10-WJ	D10-WJ	49-873	49-843
WJ-55-1	K10-WJ	D10-WJ	49-873	49-843
WJ-56-1	K10-WJ	D10-WJ	49-873	49-843
WJ-57-1	K10-WJ	D10-WJ	49-873	49-843
WJ-58-1	K10-WJ	D10-WJ	49-873	49-843
WJ-59-1	K10-WJ	D10-WJ	49-873	49-843
WJ-60-1	K10-WJ	D10-WJ	49-873	49-843
WJ-6-1	K10-WJ	D10-WJ	49-873	49-843
WJ-61-1	K10-WJ	D10-WJ	49-873	49-843
WJ-63-1	K15-WJ	D10-WJ		49-843
WJ-64-1	K10-WJ	D10-WJ	49-873	49-843
WJ-68-1	K10-WJ	D10-WJ	49-873	49-843
WJ-69	K10-WJ	D10-WJ	49-873	49-843
WJ-70-1	K10-WJ	D10-WJ	49-873	49-843
WJ-7-1	K10-WJ	D10-WJ	49-873	49-843
WJ-71-1	K10-WJ	D10-WJ	49-873	49-843
WJ-72-1	K15-WJ	D10-WJ		49-843
WJ-73-1	K15-WJ	D10-WJ		49-843
WJ-74-1	K15-WJ	D10-WJ		49-843
WJ-75-1	K15-WJ	D10-WJ		49-843
WJ-77-1	K10-WJ	D10-WJ	49-873	49-843
WJ-78-1	K10-WJ	D10-WJ	49-873	49-843
WJ-79-1	K10-WJ	D10-WJ	49-873	49-843
WJ-80-1	K10-WJ	D10-WJ	49-873	49-843
WJ-8-1	K10-WJ	D10-WJ	49-873	49-843
WJ-81-1	K10-WJ	D10-WJ	49-873	49-843
WJ-82-1	K10-WJ	D10-WJ	49-873	49-843
WJ-83-1	K15-WJ	D10-WJ		49-843
WJ-84-1	K10-WJ	D10-WJ	49-873	49-843
WJ-85-1	K15-WJ	D10-WJ		49-843
WJ-87-1	K10-WJ	D10-WJ	49-873	49-843
WJ-89-1	K10-WJ	D13-WJ	49-873	49-843

C

OEM CARBURETOR			OREGON	
Model	Kit	Gaskets	Kit	Gaskets
Walbro				
WJ-90-1	K10-WJ	D10-WJ	49-873	49-843
WJ-9-1	K10-WJ	D10-WJ	49-873	49-843
WJ-95-1	K10-WJ	D10-WJ	49-873	49-843
WJ-96-1	K10-WJ	D10-WJ	49-873	49-843
WJ-97-1	K10-WJ	D10-WJ	49-873	49-843
WJ-98-1	K10-WJ	D10-WJ	49-873	49-843
WJ-99-1	K10-WJ	D10-WJ	49-873	49-843
WS-10-1	K10-WS	D10-WS		49-814
WS-1-1	K10-WS	D10-WS		49-814
WS-11-1	K10-WS	D10-WS		49-814
WS-13-1	K10-WS	D10-WS		49-814
WS-14-1	K10-WS	D10-WS		49-814
WS-17-1	K10-WS	D10-WS		49-814
WS-18-1	K10-WS	D10-WS		49-814
WS-21-1	K10-WS	D10-WS		49-814
WS-22-1	K10-WS	D10-WS		49-814
WS-24-1	K10-WS	D10-WS		49-814
WS-25-1	K10-WS	D10-WS		49-814
WS-26-1	K10-WS	D10-WS		49-814
WS-3-1	K10-WS	D10-WS		49-814
WT-100-1	K22-WAT	D22-WAT		
WT-1008-1	K27-WAT			
WT-1009-1	K27-WAT			
WT-10-1	K10-WAT	D10-WAT	49-816	49-812
WT-101-1	K10-WAT	D10-WAT	49-816	49-812
WT-1011-1	K27-WAT			
WT-1012-1	K27-WAT			
WT-1014-1	K27-WAT			
WT-1015-1	K27-WAT			
WT-1016-1	K27-WAT			
WT-1017-1	K27-WAT			
WT-1018-1	K27-WAT			
WT-1019-1	K27-WAT			
WT-1020-1	K27-WAT			
WT-102-1	K10-WAT	D10-WAT	49-816	49-812
WT-1026-1	K27-WAT			
WT-1028-1	K27-WAT			
WT-1030-1	K27-WAT			
WT-103-1	K10-WAT	D10-WAT	49-816	49-812
WT-1031-1	K27-WAT			
WT-1036-1	K20-WAT		49-831	
WT-1037-1	K27-WAT			
WT-1039-1	K27-WAT			
WT-104-1	K10-WAT	D10-WAT	49-816	49-812
WT-1041-1	K27-WAT			
WT-1042-1	K27-WAT			
WT-1046-1	K27-WAT			
WT-105-1	K10-WAT	D10-WAT	49-816	49-812
WT-106-1	K10-WAT	D10-WAT	49-816	49-812
WT-107-1	K10-WAT	D10-WAT	49-816	49-812
WT-108-1	K20-WAT	D10-WAT	49-831	49-812
WT-109-1	K20-WAT	D10-WAT	49-831	49-812
WT-1-1	K10-WAT	D10-WAT	49-816	49-812
WT-11-1	K10-WAT	D10-WAT	49-816	49-812
WT-111-1	K10-WAT	D10-WAT	49-816	49-812
WT-112-1	K10-WAT	D10-WAT	49-816	49-812
WT-113-1	K10-WAT	D10-WAT	49-816	49-812
WT-114-1	K10-WAT	D10-WAT	49-816	49-812
WT-115-1	K10-WAT	D10-WAT	49-816	49-812
WT-116-1	K20-WAT	D10-WAT	49-831	49-812
WT-117-1	K20-WAT	D10-WAT	49-831	49-812
WT-118-1	K20-WAT	D10-WAT	49-831	49-812
WT-119-1	K20-WAT	D10-WAT	49-831	49-812
WT-120-1	K10-WAT	D10-WAT	49-816	49-812
WT-12-1	K10-WAT	D10-WAT	49-816	49-812
WT-123-1	K10-WAT	D10-WAT	49-816	49-812
WT-124-1	K10-WAT	D10-WAT	49-816	49-812
WT-125-1	K20-WAT	D10-WAT	49-831	49-812
WT-126-1	K20-WAT	D10-WAT	49-831	49-812
WT-127-1	K20-WAT	D10-WAT	49-831	49-812
WT-130-1	K10-WAT	D10-WAT	49-816	49-812
WT-13-1	K20-WAT	D10-WAT	49-831	49-812
WT-131-1	K10-WAT	D10-WAT	49-816	49-812
WT-132-1	K20-WAT	D20-WAT	49-831	49-812
WT-133-1	K10-WAT	D10-WAT	49-816	49-812
WT-134-1	K10-WAT	D10-WAT	49-816	49-812
WT-137-1	K10-WAT	D10-WAT	49-816	49-812
WT-138-1	K10-WAT	D10-WAT	49-816	49-812

OEM CARBURETOR			OREGON	
Model	Kit	Gaskets	Kit	Gaskets
Walbro				
WT-139-1	K10-WAT	D10-WAT	49-816	49-812
WT-140-1	K10-WAT	D10-WAT	49-816	49-812
WT-14-1	K20-WAT	D10-WAT	49-831	49-812
WT-141-1	K10-WAT	D10-WAT	49-816	49-812
WT-142-1	K10-WAT	D10-WAT	49-816	49-812
WT-143-1	K10-WAT	D10-WAT	49-816	49-812
WT-144-1	K10-WAT	D10-WAT	49-816	49-812
WT-145-1	K10-WAT	D10-WAT	49-816	49-812
WT-146-1	K10-WAT	D10-WAT	49-816	49-812
WT-147-1	K10-WAT	D10-WAT	49-816	49-812
WT-148-1	K10-WAT	D10-WAT	49-816	49-812
WT-149-1	K10-WAT	D10-WAT	49-816	49-812
WT-150-1	K20-WAT	D10-WAT	49-831	49-812
WT-15-1	K10-WAT	D10-WAT	49-816	49-812
WT-151-1	K20-WAT	D20-WAT	49-831	49-812
WT-152-1	K10-WAT	D10-WAT	49-816	49-812
WT-153-1	K10-WAT	D10-WAT	49-816	49-812
WT-156-1	K20-WAT	D10-WAT	49-831	49-812
WT-157-1	K10-WAT	D10-WAT	49-816	49-812
WT-158-1	K10-WAT	D10-WAT	49-816	49-812
WT-159-1	K10-WAT	D10-WAT	49-816	49-812
WT-160-1	K20-WAT	D20-WAT	49-831	49-812
WT-16-1	K10-WAT	D10-WAT	49-816	49-812
WT-161-1	K10-WAT	D10-WAT	49-816	49-812
WT-162-1	K20-WAT	D10-WAT	49-831	49-812
WT-163-1	K20-WAT	D20-WAT	49-831	49-812
WT-165-1	K20-WAT	D10-WAT	49-831	49-812
WT-166-1	K10-WAT	D10-WAT	49-816	49-812
WT-167-1	K10-WAT	D10-WAT	49-816	49-812
WT-168-1	K10-WAT	D10-WAT	49-816	49-812
WT-169-1	K20-WAT	D10-WAT	49-831	49-812
WT-170-1	K20-WAT	D10-WAT	49-831	49-812
WT-17-1	K20-WAT	D10-WAT	49-831	49-812
WT-171-1	K20-WAT	D10-WAT	49-831	49-812
WT-172-1	K20-WAT	D10-WAT	49-831	49-812
WT-173-1	K20-WAT	D10-WAT	49-831	49-812
WT-174-1	K20-WAT	D10-WAT	49-831	49-812
WT-175-1	K10-WAT	D10-WAT	49-816	49-812
WT-176-1	K10-WAT	D10-WAT	49-816	49-812
WT-178-1	K10-WAT	D10-WAT	49-816	49-812
WT-179-1	K20-WAT	D10-WAT	49-831	49-812
WT-180-1	K10-WAT	D10-WAT	49-816	49-812
WT-18-1	K10-WAT	D10-WAT	49-816	49-812
WT-181-1	K10-WAT	D10-WAT	49-816	49-812
WT-182-1	K10-WAT	D10-WAT	49-816	49-812
WT-183-1	K20-WAT	D10-WAT	49-831	49-812
WT-184-1	K10-WAT	D10-WAT	49-816	49-812
WT-185-1	K20-WAT	D10-WAT	49-831	49-812
WT-186-1	K10-WAT	D10-WAT	49-816	49-812
WT-187-1	K10-WAT	D10-WAT	49-816	49-812
WT-188-1	K10-WAT	D10-WAT	49-816	49-812
WT-189-1	K20-WAT	D10-WAT	49-831	49-812
WT-190-1	K10-WAT	D10-WAT	49-816	49-812
WT-19-1	K20-WAT	D10-WAT	49-831	49-812
WT-191-1	K20-WAT	D10-WAT	49-831	49-812
WT-192-1	K20-WAT	D10-WAT	49-831	49-812
WT-194-1	K20-WAT	D10-WAT	49-831	49-812
WT-195A	K10-WAT	D10-WAT	49-816	49-812
WT-196-1	K20-WAT	D20-WAT	49-831	49-812
WT-198-1	K10-WAT	D10-WAT	49-816	49-812
WT-199-1	K10-WAT	D10-WAT	49-816	49-812
WT-20-1	K10-WAT	D10-WAT	49-816	49-812
WT-201-1	K20-WAT	D20-WAT	49-831	49-812
WT-202-1	K20-WAT	D10-WAT	49-831	49-812
WT-204-1	K10-WAT	D10-WAT	49-816	49-812
WT-205-1	K10-WAT	D10-WAT	49-816	49-812
WT-206-1	K10-WAT	D10-WAT	49-816	49-812
WT-207-1	K20-WAT	D20-WAT	49-831	49-812
WT-208-1	K20-WAT	D10-WAT	49-831	49-812
WT-209-1	K20-WAT	D10-WAT	49-831	49-812
WT-2-1	K10-WAT	D10-WAT	49-816	49-812
WT-210-1	K10-WAT	D10-WAT	49-816	49-812
WT-21-1	K10-WAT	D10-WAT	49-816	49-812
WT-211-1	K20-WAT	D20-WAT	49-831	49-812
WT-212-1	K20-WAT	D10-WAT	49-831	49-812
WT-213-1	K10-WAT	D10-WAT	49-816	49-812
WT-214-1	K10-WAT	D10-WAT	49-816	49-812
WT-215-1	K20-WAT	D10-WAT	49-831	49-812

OEM CARBURETOR			OREGON	
Model	Kit	Gaskets	Kit	Gaskets
Walbro				
WT-216-1	K10-WAT	D10-WAT	49-816	49-812
WT-217-1	K10-WAT	D10-WAT	49-816	49-812
WT-218-1	K20-WAT	D10-WAT	49-831	49-812
WT-219-1	K10-WAT	D10-WAT	49-816	49-812
WT-220-1	K10-WAT	D10-WAT	49-816	49-812
WT-22-1	K10-WAT	D10-WAT	49-816	49-812
WT-221-1	K20-WAT	D10-WAT	49-831	49-812
WT-223-1	K20-WAT	D10-WAT	49-831	49-812
WT-224-1	K20-WAT	D10-WAT	49-831	49-812
WT-225-1	K20-WAT	D10-WAT	49-831	49-812
WT-226-1	K10-WAT	D10-WAT	49-816	49-812
WT-227-1	K10-WAT	D10-WAT	49-816	49-812
WT-228-1	K20-WAT	D10-WAT	49-831	49-812
WT-229-1	K20-WAT	D10-WAT	49-831	49-812
WT-230-1	K10-WAT	D10-WAT	49-816	49-812
WT-231-1	K10-WAT	D10-WAT	49-816	49-812
WT-232-1	K10-WAT	D10-WAT	49-816	49-812
WT-233-1	K10-WAT	D10-WAT	49-816	49-812
WT-234-1	K20-WAT	D10-WAT	49-831	49-812
WT-235-1	K10-WAT	D10-WAT	49-816	49-812
WT-236-1	K10-WAT	D10-WAT	49-816	49-812
WT-237-1	K10-WAT	D10-WAT	49-816	49-812
WT-238-1	K20-WAT	D20-WAT	49-831	49-812
WT-239-1	K20-WAT	D10-WAT	49-831	49-812
WT-24-1	K10-WAT	D10-WAT	49-816	49-812
WT-241-1	K20-WAT	D20-WAT	49-831	49-812
WT-242-1	K10-WAT	D10-WAT	49-816	49-812
WT-243-1	K10-WAT	D10-WAT	49-816	49-812
WT-244-1	K10-WAT	D10-WAT	49-816	49-812
WT-245-1	K20-WAT	D10-WAT	49-831	49-812
WT-246-1	K20-WAT	D10-WAT	49-831	49-812
WT-247-1	K10-WAT	D10-WAT	49-816	49-812
WT-248-1	K10-WAT	D10-WAT	49-816	49-812
WT-249-1	K20-WAT	D10-WAT	49-831	49-812
WT-250-1	K10-WAT	D10-WAT	49-816	49-812
WT-25-1	K10-WAT	D10-WAT	49-816	49-812
WT-251-1	K10-WAT	D10-WAT	49-816	49-812
WT-252-1	K10-WAT	D10-WAT	49-816	49-812
WT-253-1	K10-WAT	D10-WAT	49-816	49-812
WT-254-1	K10-WAT	D10-WAT	49-816	49-812
WT-255-1	K10-WAT	D10-WAT	49-816	49-812
WT-257-1	K10-WAT	D10-WAT	49-816	49-812
WT-258-1	K10-WAT	D10-WAT	49-816	49-812
WT-259-1	K10-WAT	D10-WAT	49-816	49-812
WT-260-1	K20-WAT	D10-WAT	49-831	49-812
WT-26-1	K10-WAT	D10-WAT	49-816	49-812
WT-261-1	K10-WAT	D10-WAT	49-816	49-812
WT-262-1	K10-WAT	D10-WAT	49-816	49-812
WT-264-1	K10-WAT	D10-WAT	49-816	49-812
WT-265-1	K10-WAT	D10-WAT	49-816	49-812
WT-266-1	K10-WAT	D10-WAT	49-816	49-812
WT-267-1	K10-WAT	D10-WAT	49-816	49-812
WT-270-1	K10-WAT	D10-WAT	49-816	49-812
WT-271-1	K10-WAT	D10-WAT	49-816	49-812
WT-272-1	K10-WAT	D10-WAT	49-816	49-812
WT-273-1	K20-WAT	D20-WAT	49-831	49-812
WT-274-1	K24-WAT	D22-WAT		
WT-275-1	K10-WAT	D10-WAT	49-816	49-812
WT-276-1	K10-WAT	D10-WAT	49-816	49-812
WT-277-1	K10-WAT	D10-WAT	49-816	49-812
WT-278-1	K10-WAT	D10-WAT	49-816	49-812
WT-279-1	K10-WAT	D10-WAT	49-816	49-812
WT-280-1	K10-WAT	D10-WAT	49-816	49-812
WT-281-1	K20-WAT	D10-WAT	49-831	49-812
WT-282-1	K20-WAT	D10-WAT	49-831	49-812
WT-283-1	K20-WAT	D10-WAT	49-831	49-812
WT-284-1	K10-WAT	D10-WAT	49-816	49-812
WT-285-1	K10-WAT	D10-WAT	49-816	49-812
WT-286-1	K20-WAT	D10-WAT	49-831	49-812
WT-287-1	K10-WAT	D10-WAT	49-816	49-812
WT-288-1	K10-WAT	D10-WAT	49-816	49-812
WT-289-1	K20-WAT	D10-WAT	49-831	49-812
WT-290-1	K20-WAT	D10-WAT	49-831	49-812
WT-29-1	K10-WAT	D10-WAT	49-816	49-812
WT-291-1	K20-WAT	D10-WAT	49-831	49-812
WT-292-1	K10-WAT	D10-WAT	49-816	49-812
WT-294-1	K22-WAT	D22-WAT		
WT-295-1	K22-WAT	D22-WAT		

Carburetor Kit Reference

OEM CARBURETOR			OREGON	
Model	Kit	Gaskets	Kit	Gaskets
Walbro				
WT-296-1	K20-WAT	D20-WAT	49-831	49-844
WT-297-1	K22-WAT	D22-WAT		
WT-298-1	K10-WAT	D10-WAT	49-816	49-812
WT-299-1	K20-WAT	D10-WAT	49-831	49-812
WT-300-1	K10-WAT	D10-WAT	49-816	49-812
WT-301-1	K10-WAT	D10-WAT	49-816	49-812
WT-302-1	K10-WAT	D10-WAT	49-816	49-812
WT-303-1	K20-WAT	D20-WAT	49-831	49-812
WT-305-1	K20-WAT	D20-WAT	49-831	49-812
WT-306-1	K20-WAT	D10-WAT	49-831	49-812
WT-307-1	K10-WAT	D10-WAT	49-816	49-812
WT-308-1	K20-WAT	D20-WAT	49-831	49-812
WT-309-1	K10-WAT	D10-WAT	49-816	49-812
WT-3-1	K10-WAT	D10-WAT	49-816	49-812
WT-310-1	K10-WAT	D10-WAT	49-816	49-812
WT-311-1	K10-WAT	D10-WAT	49-816	49-812
WT-312-1	K10-WAT	D10-WAT	49-816	49-812
WT-313-1	K20-WAT	D10-WAT	49-831	49-812
WT-314-1	K22-WAT	D22-WAT		
WT-315-1	K20-WAT	D20-WAT	49-831	49-812
WT-317-1	K10-WAT	D10-WAT	49-816	49-812
WT-318-1	K10-WAT	D10-WAT	49-816	49-812
WT-321-1	K10-WAT	D10-WAT	49-816	49-812
WT-322-1	K10-WAT	D10-WAT	49-816	49-812
WT-323-1	K10-WAT	D10-WAT	49-816	49-812
WT-324-1	K10-WAT	D10-WAT	49-816	49-812
WT-325-1	K20-WAT	D10-WAT	49-831	49-812
WT-326-1	K10-WAT	D10-WAT	49-816	49-812
WT-327-1	K20-WAT	D10-WAT	49-831	49-812
WT-329-1	K10-WAT	D10-WAT	49-816	49-812
WT-330-1	K10-WAT	D10-WAT	49-816	49-812
WT-33-1	K10-WAT	D10-WAT	49-816	49-812
WT-331-1	K10-WAT	D10-WAT	49-816	49-812
WT-332-1	K10-WAT	D10-WAT	49-816	49-812
WT-333-1	K20-WAT	D20-WAT	49-831	49-812
WT-334-1	K20-WAT	D10-WAT	49-831	49-812
WT-336-1	K20-WAT	D10-WAT	49-831	49-812
WT-337-1	K10-WAT	D10-WAT	49-816	49-812
WT-338-1	K20-WAT	D10-WAT	49-831	49-812
WT-339-1	K10-WAT	D10-WAT	49-816	49-812
WT-340-1	K10-WAT	D10-WAT	49-816	49-812
WT-34-1	K20-WAT	D10-WAT	49-831	49-812
WT-341-1	K10-WAT	D10-WAT	49-816	49-812
WT-344-1	K22-WAT	D22-WAT		
WT-345-1	K10-WAT	D10-WAT	49-816	49-812
WT-346-1	K20-WAT	D11-WAT	49-831	49-812
WT-347-1	K10-WAT	D10-WAT	49-816	49-812
WT-348-1	K10-WAT	D10-WAT	49-816	49-812
WT-349-1	K10-WAT	D10-WAT	49-816	49-812
WT-350-1	K20-WAT	D10-WAT	49-831	49-812
WT-35-1	K10-WAT	D10-WAT	49-816	49-812
WT-352-1	K10-WAT	D10-WAT	49-816	49-812
WT-353-1	K20-WAT	D10-WAT	49-831	49-812
WT-354-1	K20-WAT	D20-WAT	49-831	49-812
WT-356-1	K10-WAT	D10-WAT	49-816	49-812
WT-357-2	K10-WAT	D10-WAT	49-816	49-812
WT-358-1	K10-WAT	D10-WAT	49-816	49-812
WT-360-1	K20-WAT	D10-WAT	49-831	49-812
WT-361-1	K20-WAT	D10-WAT	49-831	49-812
WT-362-1	K10-WAT	D10-WAT	49-816	49-812
WT-363-1	K20-WAT	D20-WAT	49-831	49-812
WT-364-1	K10-WAT	D10-WAT	49-816	49-812
WT-365-1	K20-WAT	D20-WAT	49-831	49-812
WT-366-1	K10-WAT	D10-WAT	49-816	49-812
WT-367-1	K10-WAT	D10-WAT	49-816	49-812
WT-368-1	K20-WAT	D10-WAT	49-831	49-812
WT-369-1	K10-WAT	D10-WAT	49-816	49-812
WT-370-1	K10-WAT	D10-WAT	49-816	49-812
WT-37-1	K10-WAT	D10-WAT	49-816	49-812
WT-371-1	K10-WAT	D10-WAT	49-816	49-812
WT-372-1	K10-WAT	D10-WAT	49-816	49-812
WT-373-1	K10-WAT	D10-WAT	49-816	49-812
WT-374-1	K20-WAT	D10-WAT	49-831	49-812
WT-375-1	K20-WAT	D10-WAT	49-831	49-812
WT-378-1	K10-WAT	D10-WAT	49-816	49-812
WT-379-1	K10-WAT	D10-WAT	49-816	49-812
WT-380-1	K10-WAT	D10-WAT	49-816	49-812
WT-38-1	K10-WAT	D10-WAT	49-816	49-812

OEM CARBURETOR			OREGON	
Model	Kit	Gaskets	Kit	Gaskets
Walbro				
WT-381-1	K10-WAT	D10-WAT	49-816	49-812
WT-382-1	K10-WAT	D10-WAT	49-816	49-812
WT-383-1	K10-WAT	D10-WAT	49-816	49-812
WT-384-1	K20-WAT	D10-WAT	49-831	49-812
WT-385-1	K10-WAT	D10-WAT	49-816	49-812
WT-386-1	K20-WAT	D11-WAT	49-831	49-812
WT-387-1	K20-WAT	D10-WAT	49-831	49-812
WT-388-1	K20-WAT	D10-WAT	49-831	49-812
WT-390-1	K20-WAT	D10-WAT	49-831	49-812
WT-39-1	K20-WAT	D10-WAT	49-831	49-812
WT-391-1	K10-WAT	D10-WAT	49-816	49-812
WT-393-1	K10-WAT	D10-WAT	49-816	49-812
WT-394-1	K10-WAT	D10-WAT	49-816	49-812
WT-395-1	K10-WAT	D10-WAT	49-816	49-812
WT-396-1	K20-WAT	D10-WAT	49-831	49-812
WT-397-1	K10-WAT	D10-WAT	49-816	49-812
WT-398-1	K10-WAT	D10-WAT	49-816	49-812
WT-399-1	K20-WAT	D10-WAT	49-831	49-812
WT-400-1	K10-WAT	D10-WAT	49-816	49-812
WT-40-1	K10-WAT	D10-WAT	49-816	49-812
WT-401-1	K20-WAT	D10-WAT	49-831	49-812
WT-402-1	K20-WAT	D10-WAT	49-831	49-812
WT-403A	K10-WAT	D10-WAT	49-816	49-812
WT-404-1	K10-WAT	D10-WAT	49-816	49-812
WT-405-1	K10-WAT	D10-WAT	49-816	49-812
WT-406-1	K10-WAT	D10-WAT	49-816	49-812
WT-407-1	K10-WAT	D10-WAT	49-816	49-812
WT-408-1	K10-WAT	D10-WAT	49-816	49-812
WT-409-1	K20-WAT	D10-WAT	49-831	49-812
WT-4-1	K10-WAT	D10-WAT	49-816	49-812
WT-410-1	K20-WAT	D10-WAT	49-831	49-812
WT-41-1	K10-WAT	D10-WAT	49-816	49-812
WT-412-1	K10-WAT	D10-WAT	49-816	49-812
WT-413-1	K10-WAT	D10-WAT	49-816	49-812
WT-414-1	K20-WAT	D10-WAT	49-831	49-812
WT-415-1	K20-WAT	D10-WAT	49-831	49-812
WT-416-1	K20-WAT	D10-WAT	49-831	49-812
WT-417-1	K20-WAT	D10-WAT	49-831	49-812
WT-418-1	K20-WAT	D10-WAT	49-831	49-812
WT-419-1	K10-WAT	D10-WAT	49-816	49-812
WT-420-1	K10-WAT	D10-WAT	49-816	49-812
WT-42-1	K20-WAT	D10-WAT	49-831	49-812
WT-421-1	K10-WAT	D10-WAT	49-816	49-812
WT-422-1	K10-WAT	D10-WAT	49-816	49-812
WT-423-1	K10-WAT	D10-WAT	49-816	49-812
WT-424-1	K24-WAT	D22-WAT		
WT-426-1	K20-WAT	D10-WAT	49-831	49-812
WT-427-1	K20-WAT	D10-WAT	49-831	49-812
WT-428-1	K20-WAT	D10-WAT	49-831	49-812
WT-429-1	K20-WAT	D10-WAT	49-831	49-812
WT-430-1	K20-WAT	D20-WAT	49-831	49-812
WT-431-1	K10-WAT	D10-WAT	49-816	49-812
WT-432-1	K10-WAT	D10-WAT	49-816	49-812
WT-433-1	K10-WAT	D10-WAT	49-816	49-812
WT-434-1	K10-WAT	D10-WAT	49-816	49-812
WT-435-1	K10-WAT	D10-WAT	49-816	49-812
WT-436-1	K20-WAT	D20-WAT	49-831	49-812
WT-437-1	K10-WAT	D10-WAT	49-816	49-812
WT-438-1	K10-WAT	D10-WAT	49-816	49-812
WT-439-1	K10-WAT	D10-WAT	49-816	49-812
WT-440-1	K10-WAT	D10-WAT	49-816	49-812
WT-441-1	K20-WAT	D10-WAT	49-831	49-812
WT-442-1	K20-WAT	D20-WAT	49-831	49-812
WT-443-1	K20-WAT	D10-WAT	49-831	49-812
WT-444-1	K20-WAT	D10-WAT	49-831	49-812
WT-445-1	K10-WAT	D10-WAT	49-816	49-812
WT-446-1	K20-WAT	D10-WAT	49-831	49-812
WT-447-1	K10-WAT	D10-WAT	49-816	49-812
WT-449-1	K10-WAT	D10-WAT	49-816	49-812
WT-450-1	K10-WAT	D10-WAT	49-816	49-812
WT-45-1	K10-WAT	"49-812		
D10-WAT"	49-816	49-812		
WT-451-1	K20-WAT	D10-WAT	49-831	49-812
WT-452-1	K20-WAT	D10-WAT	49-831	49-812
WT-454-1	K10-WAT	D10-WAT	49-816	49-812
WT-455-1	K10-WAT	D10-WAT	49-816	49-812
WT-456-1	K10-WAT	D10-WAT	49-816	49-812
WT-457-1	K10-WAT	D10-WAT	49-816	49-812

OEM CARBURETOR			OREGON	
Model	Kit	Gaskets	Kit	Gaskets
Walbro				
WT-458-1	K20-WAT	D20-WAT	49-831	49-812
WT-459-1	K20-WAT	D10-WAT	49-831	49-812
WT-460-1	K20-WAT	D20-WAT	49-831	49-812
WT-46-1	K20-WAT	D10-WAT	49-831	49-812
WT-461-1	K10-WAT	D10-WAT	49-816	49-812
WT-462-1	K20-WAT	D10-WAT	49-831	49-812
WT-463-1	K20-WAT	D10-WAT	49-831	49-812
WT-464-1	K10-WAT	D10-WAT	49-816	49-812
WT-465-1	K20-WAT	D10-WAT	49-831	49-812
WT-466-1	K20-WAT	D10-WAT	49-831	49-812
WT-467-1	K20-WAT	D10-WAT	49-831	49-812
WT-469-1	K10-WAT	D10-WAT	49-816	49-812
WT-470-1	K10-WAT	D10-WAT	49-816	49-812
WT-47-1	K10-WAT	D10-WAT	49-816	49-812
WT-471-1	K10-WAT	D10-WAT	49-816	49-812
WT-472-1	K20-WAT	D10-WAT	49-831	49-812
WT-474-1	K20-WAT	D10-WAT	49-831	49-812
WT-475-1	K20-WAT	D20-WAT	49-831	49-812
WT-476-1	K10-WAT	D10-WAT	49-816	49-812
WT-477-1	K10-WAT	D10-WAT	49-816	49-812
WT-478-1	K20-WAT	D10-WAT	49-831	49-812
WT-480-1	K20-WAT	D10-WAT	49-831	49-812
WT-48-1	K10-WAT	D10-WAT	49-816	49-812
WT-481-1	K20-WAT	D10-WAT	49-831	49-812
WT-484-1	K20-WAT	D10-WAT	49-831	49-812
WT-486-1	K20-WAT	D10-WAT	49-831	49-812
WT-487-1	K20-WAT	D10-WAT	49-831	49-812
WT-488-1	K20-WAT	D10-WAT	49-831	49-812
WT-489-1	K10-WAT	D10-WAT	49-816	49-812
WT-49-1	K10-WAT	D10-WAT	49-816	49-812
WT-492-1	K20-WAT	D10-WAT	49-831	49-812
WT-493-1	K20-WAT	D10-WAT	49-831	49-812
WT-494-1	K20-WAT	D10-WAT	49-831	49-812
WT-495-1	K10-WAT	D10-WAT	49-816	49-812
WT-496-1	K20-WAT	D10-WAT	49-831	49-812
WT-497-1	K20-WAT	D20-WAT	49-831	49-812
WT-498-1	K10-WAT	D10-WAT	49-816	49-812
WT-499-1	K20-WAT	D10-WAT	49-831	49-812
WT-500-1	K10-WAT	D10-WAT	49-816	49-812
WT-50-1	K10-WAT	D10-WAT	49-816	49-812
WT-501-1	K20-WAT	D10-WAT	49-831	49-812
WT-502-1	K20-WAT	D10-WAT	49-831	49-812
WT-503-1	K20-WAT	D10-WAT	49-831	49-812
WT-504-1	K20-WAT	D10-WAT	49-831	49-812
WT-505-1	K20-WAT	D10-WAT	49-831	49-812
WT-506-1	K20-WAT	D10-WAT	49-831	49-812
WT-507-1	K20-WAT	D10-WAT	49-831	49-812
WT-508-1	K20-WAT	D10-WAT	49-831	49-812
WT-509-1	K20-WAT	D10-WAT	49-831	49-812
WT-5-1	K10-WAT	D10-WAT	49-816	49-812
WT-51-1	K10-WAT	D10-WAT	49-816	49-812
WT-511-1	K10-WAT	D10-WAT	49-816	49-812
WT-512-1	K20-WAT	D20-WAT	49-831	49-812
WT-513-1	K20-WAT	D10-WAT	49-831	49-812
WT-514-1	K20-WAT	D20-WAT	49-831	49-844
WT-515-1	K20-WAT	D10-WAT	49-831	49-812
WT-516-1	K20-WAT	D10-WAT	49-831	49-812
WT-517-1	K20-WAT	D10-WAT	49-831	49-812
WT-518-1	K10-WAT	D10-WAT	49-816	49-812
WT-519-1	K10-WAT	D10-WAT	49-816	49-812
WT-520-1	K10-WAT	D10-WAT	49-816	49-812
WT-52-1	K20-WAT	D10-WAT	49-831	49-812
WT-521-1	K20-WAT	D10-WAT	49-831	49-812
WT-524-1	K10-WAT	D10-WAT	49-816	49-812
WT-525-1	K20-WAT	D20-WAT	49-831	49-844
WT-526-1	K10-WAT	D10-WAT	49-816	49-812
WT-527-1	K20-WAT	D20-WAT	49-831	49-844
WT-529-1	K20-WAT	D10-WAT	49-831	49-812
WT-530-1	K10-WAT	D10-WAT	49-816	49-812
WT-53-1	K10-WAT	D10-WAT	49-816	49-812
WT-531-1	K20-WAT	D20-WAT	49-831	49-844
WT-532-1	K20-WAT	D10-WAT	49-831	49-812
WT-533-1	K20-WAT	D10-WAT	49-831	49-812
WT-534-1	K20-WAT	D20-WAT	49-831	49-844
WT-535-1	K20-WAT	D20-WAT	49-831	49-844
WT-536-1	K20-WAT	D10-WAT	49-831	49-812
WT-538-1	K10-WAT	D10-WAT	49-816	49-812
WT-539-1	K10-WAT	D10-WAT	49-816	49-812

OEM CARBURETOR			OREGON	
Model	Kit	Gaskets	Kit	Gaskets
Walbro				
WT-540-1	K20-WAT	D10-WAT	49-831	49-812
WT-542-1	K20-WAT	D10-WAT	49-831	49-812
WT-543-1	K20-WAT	D20-WAT	49-831	49-844
WT-544-1	K20-WAT	D20-WAT	49-831	49-844
WT-545-1	K20-WAT	D20-WAT	49-831	49-844
WT-547-1	K20-WAT	D10-WAT	49-831	49-812
WT-548-1	K10-WAT	D10-WAT	49-816	49-812
WT-549-1	K20-WAT	D20-WAT	49-831	49-844
WT-550-1	K10-WAT	D10-WAT	49-816	49-812
WT-55-1	K10-WAT	D10-WAT	49-816	49-812
WT-551-1	K10-WAT	D10-WAT	49-816	49-812
WT-552-1	K10-WAT	D10-WAT	49-816	49-812
WT-553-1	K20-WAT	D20-WAT	49-831	49-844
WT-555-1	K20-WAT	D10-WAT	49-831	49-812
WT-556-1	K20-WAT	D10-WAT	49-831	49-812
WT-557-1	K20-WAT	D20-WAT	49-831	49-844
WT-558-1	K20-WAT	D20-WAT	49-831	49-844
WT-559-1	K26-WAT	D20-WAT		49-844
WT-560-1	K20-WAT	D20-WAT	49-831	49-844
WT-56-1	K20-WAT	D10-WAT	49-831	49-812
WT-561-1	K20-WAT	D20-WAT	49-831	49-844
WT-562-1	K20-WAT	D20-WAT	49-831	49-844
WT-563-1	K20-WAT	D26-WAT	49-831	
WT-565-1	K20-WAT	D20-WAT	49-831	49-844
WT-566-1	K20-WAT	D20-WAT	49-831	49-844
WT-567-1	K20-WAT	D20-WAT	49-831	49-844
WT-568-1	K20-WAT	D20-WAT	49-831	49-844
WT-569-1	K20-WAT	D20-WAT	49-831	49-844
WT-570-1	K26-WAT	D26-WAT		
WT-57-1	K10-WAT	D10-WAT	49-816	49-812
WT-571-1	K20-WAT	D20-WAT	49-831	49-844
WT-572-1	K20-WAT	D20-WAT	49-831	49-844
WT-573-1	K20-WAT	D20-WAT	49-831	49-844
WT-574-1	K20-WAT	D20-WAT	49-831	49-844
WT-575-1	K20-WAT	D20-WAT	49-831	49-844
WT-576-1	K26-WAT	D26-WAT		
WT-577-1	K20-WAT	D20-WAT	49-831	49-844
WT-578-1	K20-WAT	D20-WAT	49-831	49-844
WT-579-1	K20-WAT	D20-WAT	49-831	49-844
WT-58-1	K10-WAT	D10-WAT	49-816	49-812
WT-582-1	K20-WAT	D20-WAT	49-831	49-844
WT-583-1	K20-WAT	D20-WAT	49-831	49-844
WT-584-1	K20-WAT	D20-WAT	49-831	49-844
WT-586-1	K20-WAT	D20-WAT	49-831	49-844
WT-587-1	K20-WAT	D20-WAT	49-831	49-844
WT-588-1	K20-WAT	D20-WAT	49-831	49-844
WT-589-1	K20-WAT	D10-WAT	49-831	49-812
WT-59-1	K10-WAT	D10-WAT	49-816	49-812
WT-591-1	K20-WAT	D10-WAT	49-831	49-812
WT-592-1	K24-WAT	D22-WAT		
WT-593-1	K20-WAT	K10-WAT	49-831	
WT-594-1	K20-WAT	D20-WAT	49-831	49-844
WT-596-1	K20-WAT	D20-WAT	49-831	49-844
WT-597-1	K10-WAT	D10-WAT	49-816	49-812
WT-598-1	K20-WAT	D10-WAT	49-831	49-812
WT-599-1	K20-WAT	D20-WAT	49-831	49-844
WT-600-1	K20-WAT	D10-WAT	49-831	49-812
WT-601-1	K20-WAT		49-831	
WT-602-1	K20-WAT	D20-WAT	49-831	49-844
WT-603-1	K20-WAT	D10-WAT	49-831	49-812
WT-604-1	K20-WAT	D10-WAT	49-831	49-812
WT-605-1	K20-WAT	D10-WAT	49-831	49-812
WT-606-1	K20-WAT	D20-WAT	49-831	49-844
WT-607-1	K20-WAT	D20-WAT	49-831	49-844
WT-609-1	K20-WAT	D20-WAT	49-831	49-844
WT-6-1	K20-WAT	D10-WAT	49-831	49-812
WT-610-1	K20-WAT	D20-WAT	49-831	49-844
WT-61-1	K20-WAT	D10-WAT	49-831	49-812
WT-612-1	K20-WAT	D20-WAT	49-831	49-844
WT-613-1	K10-WAT	D10-WAT	49-816	49-812
WT-614-1	K20-WAT	D10-WAT	49-831	49-812
WT-615-1	K20-WAT	D20-WAT	49-831	49-844
WT-616-1	K20-WAT	D10-WAT	49-831	49-812
WT-617-1	K20-WAT	D20-WAT	49-831	49-844
WT-618-1	K10-WAT	D10-WAT	49-816	49-812
WT-619-1	K10-WAT	D10-WAT	49-816	49-812
WT-620-1	K24-WAT	D22-WAT		
WT-62-1	K10-WAT	D10-WAT	49-816	49-812

OEM CARBURETOR			OREGON	
Model	Kit	Gaskets	Kit	Gaskets
Walbro				
WT-621-1	K24-WAT	D22-WAT		
WT-622-1	K20-WAT	D20-WAT	49-831	49-844
WT-624-1	K20-WAT	D20-WAT	49-831	49-844
WT-625-1	K20-WAT	D20-WAT	49-831	49-844
WT-626-1	K24-WAT	D22-WAT		
WT-627-1	K20-WAT	D20-WAT	49-831	49-844
WT-628-1	K20-WAT	D20-WAT	49-831	49-844
WT-629-1	K20-WAT	D20-WAT	49-831	49-844
WT-630-1	K24-WAT	D22-WAT		
WT-63-1	K10-WAT	D10-WAT	49-816	49-812
WT-631-1	K24-WAT	D22-WAT		
WT-632-1	K20-WAT	D20-WAT	49-831	49-844
WT-633-1	K20-WAT	D20-WAT	49-831	49-844
WT-634-1	K20-WAT	D20-WAT	49-831	49-844
WT-635-1	K20-WAT	D20-WAT	49-831	49-844
WT-636-1	K20-WAT	D20-WAT	49-831	49-844
WT-638-1	K20-WAT	D20-WAT	49-831	49-844
WT-639-1	K20-WAT	D20-WAT	49-831	49-844
WT-640-1	K24-WAT	D22-WAT		
WT-64-1	K10-WAT	D10-WAT	49-816	49-812
WT-641-1	K20-WAT	D20-WAT	49-831	49-844
WT-642-1	K20-WAT	D20-WAT	49-831	49-844
WT-643-1	K24-WAT	D20-WAT		49-844
WT-644-1	K24-WAT	D20-WAT		49-844
WT-645-1	K24-WAT	D20-WAT		49-844
WT-646-1	K24-WAT	D20-WAT		49-844
WT-647-1	K24-WAT	D20-WAT		49-844
WT-648-1	K24-WAT	D20-WAT		49-844
WT-649-1	K24-WAT	D20-WAT		49-844
WT-650-1	K20-WAT	D20-WAT	49-831	49-844
WT-65-1	K10-WAT	D10-WAT	49-816	
WT-654-1	K20-WAT	D20-WAT	49-831	49-844
WT-655-1	K20-WAT	D20-WAT	49-831	49-844
WT-656-1	K20-WAT	D20-WAT	49-831	49-844
WT-657-1	K20-WAT	D20-WAT	49-831	49-844
WT-658-1	K20-WAT	D20-WAT	49-831	49-844
WT-660-1	K20-WAT	D20-WAT	49-831	49-844
WT-66-1	K10-WAT	D10-WAT	49-816	49-812
WT-661-1	K20-WAT	D20-WAT	49-831	49-844
WT-662-1	K20-WAT	D26-WAT	49-831	
WT-663-1	K20-WAT	D20-WAT	49-831	49-844
WT-664-1	K20-WAT	D20-WAT	49-831	49-844
WT-665-1	K20-WAT	D20-WAT	49-831	49-844
WT-666-1	K20-WAT	D10-WAT	49-831	49-812
WT-667-1	K20-WAT	D20-WAT	49-831	49-844
WT-668-1	K20-WAT	D20-WAT	49-831	49-844
WT-669-1	K24-WAT	D22-WAT		
WT-670-1	K24-WAT	D22-WAT		
WT-67-1	K20-WAT	D10-WAT	49-831	49-812
WT-671-1	K24-WAT	D22-WAT		
WT-673-1	K20-WAT	D26-WAT	49-831	
WT-674-1	K20-WAT	D20-WAT	49-831	49-844
WT-675-1	K22-WAT	D22-WAT		
WT-676-1	K20-WAT	D20-WAT	49-831	49-844
WT-677-1	K20-WAT	D20-WAT	49-831	49-844
WT-678-1	K26-WAT	D26-WAT		
WT-679-1	K20-WAT	D20-WAT	49-831	49-844
WT-680-1	K20-WAT	D20-WAT	49-831	49-844
WT-68-1	K10-WAT	D10-WAT	49-816	49-812
WT-682-1	K20-WAT	D20-WAT	49-831	49-844
WT-684-1	K26-WAT	D26-WAT		
WT-685-1	K10-WAT	D10-WAT	49-816	49-812
WT-686-1	K20-WAT	D20-WAT	49-831	49-844
WT-687-1	K20-WAT	D20-WAT	49-831	49-844
WT-688-1	K20-WAT	D20-WAT	49-831	49-844
WT-689-1	K20-WAT	D20-WAT	49-831	49-844
WT-690-1	K20-WAT	D20-WAT	49-831	49-844
WT-69-1	K20-WAT	D10-WAT	49-831	49-812
WT-691-1	K20-WAT	D20-WAT	49-831	49-844
WT-692-1	K20-WAT	D20-WAT	49-831	49-844
WT-693-1	K20-WAT	D20-WAT	49-831	49-844
WT-694-1	K20-WAT	D20-WAT	49-831	49-844
WT-695-1	K20-WAT	D20-WAT	49-831	49-844
WT-696-1	K20-WAT	D20-WAT	49-831	49-844
WT-697-1	K20-WAT	D20-WAT	49-831	49-844
WT-698-1	K20-WAT	D20-WAT	49-831	49-844
WT-699-1	K20-WAT	D20-WAT	49-831	49-844
WT-700-1	K20-WAT	D20-WAT	49-831	49-844

OEM CARBURETOR			OREGON	
Model	Kit	Gaskets	Kit	Gaskets
Walbro				
WT-70-1	K20-WAT	D10-WAT	49-831	49-812
WT-701-1	K20-WAT	D20-WAT	49-831	49-844
WT-702-1	K20-WAT	D10-WAT	49-831	49-812
WT-703-1	K20-WAT	D10-WAT	49-831	49-812
WT-705-1	K26-WAT	D26-WAT	0	0
WT-707-1	K20-WAT	D10-WAT	49-831	49-812
WT-708-1	K20-WAT	D20-WAT	49-831	49-844
WT-709-1	K26-WAT	D26-WAT		
WT-710-1	K20-WAT	D20-WAT	49-831	49-844
WT-71-1	K20-WAT	D10-WAT	49-831	49-812
WT-711-1	K20-WAT	D20-WAT	49-831	49-844
WT-712-1	K20-WAT	D20-WAT	49-831	49-844
WT-714-1	K20-WAT	D20-WAT	49-831	49-844
WT-715-1	K20-WAT	D20-WAT	49-831	49-844
WT-716-1	K20-WAT	D20-WAT	49-831	49-844
WT-717-1	K20-WAT	D20-WAT	49-831	49-844
WT-718-1	K20-WAT	D20-WAT	49-831	49-844
WT-720-1	K20-WAT	D20-WAT	49-831	49-844
WT-72-1	K20-WAT	D10-WAT	49-831	49-812
WT-721-1	K20-WAT	D20-WAT	49-831	49-844
WT-722-1	K20-WAT	D20-WAT	49-831	49-844
WT-723-1	K20-WAT	D20-WAT	49-831	49-844
WT-724-1	K20-WAT	D20-WAT	49-831	49-844
WT-725-1	K20-WAT	D20-WAT	49-831	49-844
WT-726-1	K10-WAT	D10-WAT	49-816	49-812
WT-727-1	K20-WAT	D20-WAT	49-831	49-844
WT-728-1	K20-WAT	D20-WAT	49-831	49-844
WT-729-1	K20-WAT	D20-WAT	49-831	49-844
WT-730-1	K20-WAT	D20-WAT	49-831	49-844
WT-73-1	K20-WAT	D10-WAT	49-831	49-812
WT-731-1	K20-WAT	D20-WAT	49-831	49-844
WT-732-1	K22-WAT	D22-WAT		
WT-733-1	K20-WAT	D20-WAT	49-831	49-844
WT-734-1	K20-WAT	D20-WAT	49-831	49-844
WT-737-1	K20-WAT	D20-WAT	49-831	49-844
WT-738-1	K20-WAT	D20-WAT	49-831	49-844
WT-739-1	K20-WAT	D20-WAT	49-831	49-844
WT-74-1	K10-WAT	D10-WAT	49-816	49-812
WT-741-1	K10-WAT	D10-WAT	49-816	49-812
WT-742-1	K20-WAT	D20-WAT	49-831	49-844
WT-743-1	K10-WAT	D10-WAT	49-816	49-812
WT-745-1	K20-WAT	D20-WAT	49-831	49-844
WT-747-1	K20-WAT	D20-WAT	49-831	49-844
WT-748-1	K20-WAT	D20-WAT	49-831	49-844
WT-749-1	K20-WAT	D20-WAT	49-831	49-844
WT-750-1	K10-WAT	D10-WAT	49-816	49-812
WT-751-1	K20-WAT	D20-WAT	49-831	49-844
WT-752-1	K20-WAT	D20-WAT	49-831	49-844
WT-753-1	K20-WAT	D20-WAT	49-831	49-844
WT-754-1	K20-WAT	D20-WAT	49-831	49-844
WT-755-1	K20-WAT	D20-WAT	49-831	49-844
WT-756-1	K20-WAT	D20-WAT	49-831	49-844
WT-757-1	K10-WAT	D10-WAT	49-816	49-812
WT-758-1	K10-WAT	D10-WAT	49-816	49-812
WT-760-1	K20-WAT	D20-WAT	49-831	49-844
WT-76-1	K20-WAT	D10-WAT	49-831	49-812
WT-761-1	K20-WAT	D20-WAT	49-831	49-844
WT-762-1	K20-WAT	D20-WAT	49-831	49-844
WT-763-1	K10-WAT	D10-WAT	49-816	49-812
WT-764-1	K20-WAT	D10-WAT	49-831	49-812
WT-765-1	K20-WAT	D10-WAT	49-831	49-812
WT-766-1	K10-WAT	D10-WAT	49-816	49-812
WT-768-1	K10-WAT	D10-WAT	49-816	49-812
WT-769-1	K20-WAT	D20-WAT	49-831	49-844
WT-77-1	K10-WAT	D10-WAT	49-816	49-812
WT-771-1	K10-WAT	D10-WAT	49-816	49-812
WT-772-1	K10-WAT	D10-WAT	49-816	49-812
WT-773-1	K24-WAT	D22-WAT		
WT-774-1	K26-WAT	D26-WAT		
WT-775-1	K24-WAT	D22-WAT		
WT-776-1	K10-WAT	D20-WAT	49-816	49-844
WT-777-1	K27-WAT			
WT-778-1	K20-WAT	D20-WAT	49-831	49-844
WT-779-1	K20-WAT	D20-WAT	49-831	49-844
WT-780-1	K27-WAT			
WT-78-1	K10-WAT	D10-WAT	49-816	49-812
WT-781-1	K27-WAT			
WT-782-1	K20-WAT	D20-WAT	49-831	49-844

C

Carburetor Kit Reference

OEM CARBURETOR			OREGON	
Model	Kit	Gaskets	Kit	Gaskets
Walbro				
WT-783-1	K20-WAT	D20-WAT	49-831	49-844
WT-784-1	K20-WAT	D20-WAT	49-831	49-844
WT-785-1	K20-WAT		49-831	
WT-786-1	K20-WAT	D20-WAT	49-831	49-844
WT-787-1	K20-WAT	D20-WAT	49-831	49-844
WT-788-1	K20-WAT	D20-WAT	49-831	49-844
WT-79-1	K20-WAT	D10-WAT	49-831	49-812
WT-792-1	K10-WAT	D10-WAT	49-816	49-812
WT-793-1	K10-WAT	D10-WAT	49-816	49-812
WT-794-1	K10-WAT	D10-WAT	49-816	49-812
WT-795-1	K27-WAT	D28-WAT		
WT-796-1	K10-WAT	D10-WAT	49-816	49-812
WT-797-1	K10-WAT	D10-WAT	49-816	49-812
WT-798-1	K10-WAT	D10-WAT	49-816	49-812
WT-799-1	K10-WAT	D10-WAT	49-816	49-812
WT-800-1	K20-WAT	D20-WAT	49-831	49-844
WT-80-1	K20-WAT	D10-WAT	49-831	49-812
WT-801-1	K20-WAT	D10-WAT	49-831	49-812
WT-802-1	K20-WAT	D10-WAT	49-831	49-812
WT-804-1	K20-WAT	D20-WAT	49-831	49-844
WT-805-1	K20-WAT	D20-WAT	49-831	49-844
WT-806-1	K20-WAT	D20-WAT	49-831	49-844
WT-807-1	K20-WAT	D20-WAT	49-831	49-844
WT-808-1	K20-WAT	D20-WAT	49-831	49-844
WT-8-1	K20-WAT	D10-WAT	49-831	49-812
WT-810-1	K20-WAT	D20-WAT	49-831	49-844
WT-81-1	K10-WAT	D10-WAT	49-816	49-812
WT-811-1	K20-WAT	D20-WAT	49-831	49-844
WT-812-1	K20-WAT	D10-WAT	49-831	49-812
WT-813-1	K10-WAT	D10-WAT	49-816	49-812
WT-814-1	K10-WAT	D10-WAT	49-816	49-812
WT-815-1	K20-WAT	D20-WAT	49-831	49-844
WT-816-1	K20-WAT	D20-WAT	49-831	49-844
WT-817-1	K26-WAT	D26-WAT		
WT-818-1	K20-WAT		49-831	
WT-819-1	K10-WAT	D10-WAT	49-816	49-812
WT-820-1	K20-WAT	D20-WAT	49-831	49-844
WT-82-1	K10-WAT	D10-WAT	49-816	49-812
WT-821-1	K20-WAT	D20-WAT	49-831	49-844
WT-822-1	K20-WAT	D20-WAT	49-831	49-844
WT-823-1	K20-WAT	D20-WAT	49-831	49-844
WT-825-1	K20-WAT	D20-WAT	49-831	49-844
WT-827-1	K20-WAT	D20-WAT	49-831	49-844
WT-829-1	K20-WAT	D20-WAT	49-831	49-844
WT-83-1	K10-WAT	D10-WAT	49-816	49-812
WT-831-1	K20-WAT	D20-WAT	49-831	49-844
WT-834-1	K20-WAT	D20-WAT	49-831	49-844
WT-835-1	K20-WAT	D20-WAT	49-831	49-844
WT-836-1	K20-WAT		49-831	
WT-838-1	K20-WAT	D20-WAT	49-831	49-844
WT-839-1	K20-WAT	D20-WAT	49-831	49-844
WT-840-1	K20-WAT	D20-WAT	49-831	49-844
WT-84-1	K10-WAT	D10-WAT	49-816	49-812
WT-841-1	K20-WAT	D20-WAT	49-831	49-844
WT-843-1	K20-WAT	D20-WAT	49-831	49-844
WT-844-1	K20-WAT	D20-WAT	49-831	49-844
WT-845-1	K20-WAT	D20-WAT	49-831	49-844
WT-846-1	K20-WAT	D20-WAT	49-831	49-844
WT-847-1	K20-WAT	D20-WAT	49-831	49-844
WT-850-1	K20-WAT	D20-WAT	49-831	49-844
WT-85-1	K10-WAT	D10-WAT	49-816	49-812
WT-852-1	K20-WAT	D20-WAT	49-831	49-844
WT-853-1	K20-WAT	D20-WAT	49-831	49-844
WT-855-1	K20-WAT	D20-WAT	49-831	49-844
WT-856-1	K20-WAT	D20-WAT	49-831	49-844
WT-857-1	K20-WAT	D20-WAT	49-831	49-844
WT-858-1	K20-WAT		49-831	
WT-860-1	K20-WAT	D20-WAT	49-831	49-844
WT-86-1	K10-WAT	D10-WAT	49-816	49-812
WT-861-1	K20-WAT	D20-WAT	49-831	49-844
WT-863-1	K20-WAT	D20-WAT	49-831	49-844
WT-864-1	K20-WAT	D20-WAT	49-831	49-844
WT-865-1	K20-WAT	D20-WAT	49-831	49-844
WT-866-1	K24-WAT	D22-WAT		
WT-869-1	K20-WAT	D20-WAT	49-831	49-844
WT-870-1	K20-WAT	D20-WAT	49-831	49-844
WT-87-1	K10-WAT	D10-WAT	49-816	49-812
WT-873-1	K20-WAT	D20-WAT	49-831	49-844

OEM CARBURETOR			OREGON	
Model	Kit	Gaskets	Kit	Gaskets
Walbro				
WT-875-1	K20-WAT	D20-WAT	49-831	49-844
WT-878-1	K27-WAT			
WT-879-1	K20-WAT	D20-WAT	49-831	49-844
WT-88-1	K10-WAT	D10-WAT	49-816	49-812
WT-89-1	K20-WAT	D10-WAT	49-831	49-812
WT-891-1	K20-WAT	D20-WAT	49-831	49-844
WT-896-1	K20-WAT	D20-WAT	49-831	49-844
WT-897-1	K20-WAT	D20-WAT	49-831	49-844
WT-899-1	K20-WAT	D20-WAT	49-831	49-844
WT-900-1	K20-WAT		49-831	
WT-90-1	K22-WAT	D22-WAT		
WT-901-1	K27-WAT			
WT-902-1	K20-WAT	D20-WAT	49-831	49-844
WT-904-1	K27-WAT			
WT-906-1	K27-WAT			
WT-909-1	K20-WAT	D20-WAT	49-831	49-844
WT-9-1	K20-WAT	D10-WAT	49-831	49-812
WT-910-1	K27-WAT			
WT-91-1	K22-WAT	D22-WAT		
WT-917-1	K20-WAT		49-831	
WT-918-1	K20-WAT		49-831	
WT-92-1	K22-WAT	D22-WAT		
WT-924-1	K24-WAT			
WT-925-1	K24-WAT			
WT-927-1	K27-WAT			
WT-929-1	K27-WAT			
WT-930-1	K27-WAT			
WT-93-1	K10-WAT	D10-WAT	49-816	49-812
WT-932-1	K27-WAT			
WT-934-1	K27-WAT			
WT-935-1	K27-WAT			
WT-936-1	K27-WAT			
WT-94-1	K10-WAT	D10-WAT	49-816	49-812
WT-942-1	K27-WAT			
WT-944-1	K20-WAT		49-831	
WT-945-1	K27-WAT			
WT-948-1	K27-WAT			
WT-96-1	K10-WAT	D10-WAT	49-816	49-812
WT-964-1	K20-WAT		49-831	
WT-97-1	K10-WAT	D10-WAT	49-816	49-812
WT-973-1	K24-WAT			
WT-980-1	K27-WAT			
WT-98-1	K20-WAT	D10-WAT	49-831	49-812
WT-981-1	K27-WAT			
WT-990-1	K20-WAT		49-831	
WT-99-1	K20-WAT	D10-WAT	49-831	49-812
WT-992-1	K27-WAT			
WT-993-1	K27-WAT			
WTA-11-1	K20-WTA	D10-WTA		
WTA-12-1	K20-WTA	D10-WTA		
WTA-13-1	K20-WTA	D10-WTA		
WTA-14-1	K20-WTA	D10-WTA		
WTA-15-1	K20-WTA	D10-WTA		
WTA-18-1	K20-WTA	D10-WTA		
WTA-19-1	K20-WTA	D10-WTA		
WTA-20-1	K20-WTA	D10-WTA		
WTA-2-1	K20-WTA	D10-WTA		
WTA-21-1	K20-WTA	D10-WTA		
WTA-23-1	K20-WTA	D10-WTA		
WTA-24-1	K20-WTA	D10-WTA		
WTA-25-1	K20-WTA	D10-WTA		
WTA-26-1	K20-WTA	D10-WTA		
WTA-28-1	K20-WTA	D10-WTA		
WTA-29-1	K20-WTA	D10-WTA		
WTA-30-1	K20-WTA	D10-WTA		
WTA-3-1	K20-WTA	D10-WTA		
WTA-31-1	K20-WTA	D10-WTA		
WTA-32-1	K20-WTA			
WTA-33-1	K10-WTA			
WTA-4-1	K20-WTA	D10-WTA		
WTA-5-1	K20-WTA	D10-WTA		
WTA-6-1	K20-WTA	D10-WTA		
WTA-7-1	K20-WTA	D10-WTA		
WTA-8-1	K20-WTA	D10-WTA		
WTA-9-1	K20-WTA	D10-WTA		
WY-10-1	K10-WY	D10-WY	49-875	49-839
WY-1-1	K10-WY	D10-WY	49-875	49-839
WY-12-1	K10-WY	D10-WY	49-875	49-839

OEM CARBURETOR			OREGON	
Model	Kit	Gaskets	Kit	Gaskets
Walbro				
WY-13-1	K10-WY	D10-WY	49-875	49-839
WY-14-1	K10-WY	D10-WY	49-875	49-839
WY-15-1	K10-WY	D10-WY	49-875	49-839
WY-16-1	K10-WY	D10-WY	49-875	49-839
WY-17-1	K10-WY	D10-WY	49-875	49-839
WY-18-1	K10-WY	D10-WY	49-875	49-839
WY-19-1	K10-WY	D10-WY	49-875	49-839
WY-20-1	K10-WY	D10-WY	49-875	49-839
WY-21-1	K10-WY	D10-WY	49-875	49-839
WY-22-1	K10-WY	D10-WY	49-875	49-839
WY-23-1	K10-WY	D10-WY	49-875	49-839
WY-24-1	K10-WY	D10-WY	49-875	49-839
WY-25-1	K10-WY	D10-WY	49-875	49-839
WY-26-1	K10-WY	D10-WY	49-875	49-839
WY-27-1	K10-WY	D10-WY	49-875	49-839
WY-28-1	K10-WY	D10-WY	49-875	49-839
WY-29-1	K10-WY	D10-WY	49-875	49-839
WY-30-1	K10-WY	D10-WY	49-875	49-839
WY-3-1	K10-WY	D10-WY	49-875	49-839
WY-31-1	K10-WY	D10-WY	49-875	49-839
WY-32-1	K10-WY	D10-WY	49-875	49-839
WY-33-1	K10-WY	D10-WY	49-875	49-839
WY-34-1	K10-WY	D10-WY	49-875	49-839
WY-35-1	K10-WY	D10-WY	49-875	49-839
WY-36-1	K10-WY	D10-WY	49-875	49-839
WY-37-1	K10-WY	D10-WY	49-875	49-839
WY-38-1	K10-WY	D10-WY	49-875	49-839
WY-39-1	K10-WY	D10-WY	49-875	49-839
WY-40-1	K10-WY	D10-WY	49-875	49-839
WY-4-1	K10-WY	D10-WY	49-875	49-839
WY-42-1	K10-WY	D10-WY	49-875	49-839
WY-43-1	K10-WY	D10-WY	49-875	49-839
WY-45-1	K10-WY	D10-WY	49-875	49-839
WY-46-1	K10-WY	D10-WY	49-875	49-839
WY-47-1	K10-WY	D10-WY	49-875	49-839
WY-48-1	K10-WY	D10-WY	49-875	49-839
WY-49-1	K10-WY	D10-WY	49-875	49-839
WY-50-1	K10-WY	D10-WY	49-875	49-839
WY-5-1	K10-WY	D10-WY	49-875	49-839
WY-51-1	K10-WY	D10-WY	49-875	49-839
WY-52-1	K10-WY	D10-WY	49-875	49-839
WY-53-1	K10-WY	D10-WY	49-875	49-839
WY-54-1	K10-WY	D10-WY	49-875	49-839
WY-55-1	K10-WY	D10-WY	49-875	49-839
WY-56-1	K10-WY	D10-WY	49-875	49-839
WY-57-1	K10-WY	D10-WY	49-875	49-839
WY-58-1	K10-WY	D10-WY	49-875	49-839
WY-59-1	K10-WY	D10-WY	49-875	49-839
WY-60-1	K10-WY	D10-WY	49-875	49-839
WY-6-1	K10-WY	D10-WY	49-875	49-839
WY-61-1	K10-WY	D10-WY	49-875	49-839
WY-62-1	K10-WY	D10-WY	49-875	49-839
WY-63-1	K10-WY	D10-WY	49-875	49-839
WY-64-1	K10-WY	D10-WY	49-875	49-839
WY-65-1	K10-WY	D10-WY	49-875	49-839
WY-66-1	K10-WY	D10-WY	49-875	49-839
WY-67-1	K10-WY	D10-WY	49-875	49-839
WY-68-1	K10-WY	D10-WY	49-875	49-839
WY-69-1	K10-WY	D10-WY	49-875	49-839
WY-7-1	K10-WY	D10-WY	49-875	49-839
WY-71-1	K10-WY	D10-WY	49-875	49-839
WY-8-1	K10-WY	D10-WY	49-875	49-839
WY-9-1	K10-WY	D10-WY	49-875	49-839
WYF-1-1	K10-WYF	D10-WYF		
WYF-2-1	K10-WYF	D10-WYF		
WYF-3-1	K10-WYF	D10-WYF		
WYF-5-1	K10-WYF	D10-WYF		
WYF-6-1	K10-WYF	D10-WYF		
WYF-8-1	K10-WYF	D10-WYF		
WYF-9-1	K10-WYF	D10-WYF		
WYJ-100-1	K20-WYJ	D20-WYJ	49-882	49-281
WYJ-10-1	K20-WYJ	D20-WYJ	49-882	49-281
WYJ-102-1	K20-WYJ	D20-WYJ	49-882	49-281
WYJ-104-1	K20-WYJ	D20-WYJ	49-882	49-281
WYJ-105-1	K20-WYJ	D20-WYJ	49-882	49-281
WYJ-106-1	K20-WYJ	D20-WYJ	49-882	49-281
WYJ-107-1	K20-WYJ	D20-WYJ	49-882	49-281
WYJ-108-1	K20-WYJ	D20-WYJ	49-882	49-281

OEM CARBURETOR			OREGON	
Model	Kit	Gaskets	Kit	Gaskets
Walbro				
WYJ-1-1	K20-WYJ	D20-WYJ	49-882	49-281
WYJ-110-1	K20-WYJ	D20-WYJ	49-882	49-281
WYJ-11-1	K20-WYJ	D20-WYJ	49-882	49-281
WYJ-111-1	K20-WYJ	D20-WYJ	49-882	49-281
WYJ-112-1	K20-WYJ	D20-WYJ	49-882	49-281
WYJ-113-1	K20-WYJ	D20-WYJ	49-882	49-281
WYJ-114-1	K20-WYJ	D20-WYJ	49-882	49-281
WYJ-115-1	K20-WYJ	D20-WYJ	49-882	49-281
WYJ-116-1	K20-WYJ	D20-WYJ	49-882	49-281
WYJ-117-1	K20-WYJ	D20-WYJ	49-882	49-281
WYJ-118-1	K20-WYJ	D20-WYJ	49-882	49-281
WYJ-119-1	K20-WYJ	D20-WYJ	49-882	49-281
WYJ-120-1	K20-WYJ	D20-WYJ	49-882	49-281
WYJ-12-1	K20-WYJ	D20-WYJ	49-882	49-281
WYJ-121-1	K20-WYJ	D20-WYJ	49-882	49-281
WYJ-122-1	K20-WYJ	D20-WYJ	49-882	49-281
WYJ-123-1	K20-WYJ	D20-WYJ	49-882	49-281
WYJ-125-1	K20-WYJ	D20-WYJ	49-882	49-281
WYJ-126-1	K20-WYJ	D20-WYJ	49-882	49-281
WYJ-127-1	K20-WYJ	D20-WYJ	49-882	49-281
WYJ-128-1	K20-WYJ	D20-WYJ	49-882	49-281
WYJ-129-1	K20-WYJ	D20-WYJ	49-882	49-281
WYJ-130-1	K20-WYJ	D20-WYJ	49-882	49-281
WYJ-13-1	K20-WYJ	D20-WYJ	49-882	49-281
WYJ-131-1	K20-WYJ	D20-WYJ	49-882	49-281
WYJ-132-1	K20-WYJ	D20-WYJ	49-882	49-281
WYJ-133-1	K20-WYJ	D20-WYJ	49-882	49-281
WYJ-134-1	K20-WYJ	D20-WYJ	49-882	49-281
WYJ-135-1	K20-WYJ	D20-WYJ	49-882	49-281
WYJ-136-1	K20-WYJ	D20-WYJ	49-882	49-281
WYJ-137-1	K20-WYJ	D20-WYJ	49-882	49-281
WYJ-138-1	K20-WYJ	D20-WYJ	49-882	49-281
WYJ-139-1	K20-WYJ	D20-WYJ	49-882	49-281
WYJ-14-1	K20-WYJ	D20-WYJ	49-882	49-281
WYJ-141-1	K20-WYJ	D20-WYJ	49-882	49-281
WYJ-142-1	K20-WYJ	D20-WYJ	49-882	49-281
WYJ-143-1	K20-WYJ	D20-WYJ	49-882	49-281
WYJ-144-1	K20-WYJ	D20-WYJ	49-882	49-281
WYJ-145-1	K20-WYJ	D20-WYJ	49-882	49-281
WYJ-146-1	K20-WYJ	D20-WYJ	49-882	49-281
WYJ-147-1	K20-WYJ	D20-WYJ	49-882	49-281
WYJ-148-1	K20-WYJ	D20-WYJ	49-882	49-281
WYJ-149-1	K20-WYJ	D20-WYJ	49-882	49-281
WYJ-150-1	K20-WYJ	D20-WYJ	49-882	49-281
WYJ-15-1	K20-WYJ	D20-WYJ	49-882	49-281
WYJ-151-1	K20-WYJ	D20-WYJ	49-882	49-281
WYJ-152-1	K20-WYJ	D20-WYJ	49-882	49-281
WYJ-153-1	K20-WYJ	D20-WYJ	49-882	49-281
WYJ-154-1	K20-WYJ	D20-WYJ	49-882	49-281
WYJ-155-1	K20-WYJ	D20-WYJ	49-882	49-281
WYJ-156-1	K20-WYJ	D20-WYJ	49-882	49-281
WYJ-157-1	K20-WYJ	D20-WYJ	49-882	49-281
WYJ-158-1	K20-WYJ	D20-WYJ	49-882	49-281
WYJ-159-1	K20-WYJ	D20-WYJ	49-882	49-281
WYJ-160-1	K20-WYJ	D20-WYJ	49-882	49-281
WYJ-16-1	K20-WYJ	D20-WYJ	49-882	49-281
WYJ-162-1	K20-WYJ	D20-WYJ	49-882	49-281
WYJ-163-1	K20-WYJ	D20-WYJ	49-882	49-281
WYJ-164-1	K20-WYJ	D20-WYJ	49-882	49-281
WYJ-165-1	K20-WYJ	D20-WYJ	49-882	49-281
WYJ-166-1	K20-WYJ	D20-WYJ	49-882	49-281
WYJ-167-1	K20-WYJ	D20-WYJ	49-882	49-281
WYJ-168-1	K20-WYJ	D20-WYJ	49-882	49-281
WYJ-169-1	K20-WYJ	D20-WYJ	49-882	49-281
WYJ-170-1	K20-WYJ	D20-WYJ	49-882	49-281
WYJ-17-1	K20-WYJ	D20-WYJ	49-882	49-281
WYJ-171-1	K20-WYJ	D20-WYJ	49-882	49-281
WYJ-172-1	K20-WYJ	D20-WYJ	49-882	49-281
WYJ-173-1	K20-WYJ	D20-WYJ	49-882	49-281
WYJ-174-1	K20-WYJ	D20-WYJ	49-882	49-281
WYJ-175-1	K20-WYJ	D20-WYJ	49-882	49-281
WYJ-176-1	K20-WYJ	D20-WYJ	49-882	49-281
WYJ-177-1	K20-WYJ	D20-WYJ	49-882	49-281
WYJ-179-1	K20-WYJ	D20-WYJ	49-882	49-281
WYJ-180-1	K20-WYJ	D20-WYJ	49-882	49-281
WYJ-18-1	K20-WYJ	D20-WYJ	49-882	49-281
WYJ-182-1	K20-WYJ	D20-WYJ	49-882	49-281
WYJ-182-1	K20-WYJ	D20-WYJ	49-882	49-281

OEM CARBURETOR			OREGON	
Model	Kit	Gaskets	Kit	Gaskets
Walbro				
WYJ-183-1	K20-WYJ	D20-WYJ	49-882	49-281
WYJ-184-1	K20-WYJ	D20-WYJ	49-882	49-281
WYJ-186-1	K20-WYJ	D20-WYJ	49-882	49-281
WYJ-188-1	K20-WYJ	D20-WYJ	49-882	49-281
WYJ-189-1	K20-WYJ	D20-WYJ	49-882	49-281
WYJ-190-1	K20-WYJ	D20-WYJ	49-882	49-281
WYJ-19-1	K20-WYJ	D20-WYJ	49-882	49-281
WYJ-191-1	K20-WYJ	D20-WYJ	49-882	49-281
WYJ-192-1	K20-WYJ	D20-WYJ	49-882	
WYJ-194-1	K20-WYJ	D20-WYJ	49-882	49-281
WYJ-195-1	K20-WYJ	D20-WYJ	49-882	49-281
WYJ-196-1	K20-WYJ	D20-WYJ	49-882	49-281
WYJ-197-1	K20-WYJ	D20-WYJ	49-882	49-281
WYJ-198-1	K20-WYJ	D20-WYJ	49-882	49-281
WYJ-199-1	K20-WYJ	D20-WYJ	49-882	49-281
WYJ-200-1	K20-WYJ	D20-WYJ	49-882	49-281
WYJ-20-1	K20-WYJ	D20-WYJ	49-882	49-281
WYJ-201-1	K20-WYJ	D20-WYJ	49-882	49-281
WYJ-202-1	K20-WYJ	D20-WYJ	49-882	49-281
WYJ-203-1	K20-WYJ	D20-WYJ	49-882	49-281
WYJ-204-1	K20-WYJ	D20-WYJ	49-882	49-281
WYJ-205-1	K20-WYJ	D20-WYJ	49-882	49-281
WYJ-206-1	K20-WYJ	D20-WYJ	49-882	49-281
WYJ-207-1	K20-WYJ	D20-WYJ	49-882	49-281
WYJ-208-1	K20-WYJ	D20-WYJ	49-882	49-281
WYJ-209-1	K20-WYJ	D20-WYJ	49-882	49-281
WYJ-2-1	K20-WYJ	D20-WYJ	49-882	49-281
WYJ-210-1	K20-WYJ	D20-WYJ	49-882	49-281
WYJ-21-1	K20-WYJ	D20-WYJ	49-882	49-281
WYJ-211-1	K20-WYJ	D20-WYJ	49-882	49-281
WYJ-212-1	K20-WYJ	D20-WYJ	49-882	49-281
WYJ-213-1	K20-WYJ	D20-WYJ	49-882	49-281
WYJ-214-1	K20-WYJ	D20-WYJ	49-882	49-281
WYJ-215-1	K20-WYJ	D20-WYJ	49-882	49-281
WYJ-216-1	K20-WYJ	D20-WYJ	49-882	49-281
WYJ-217-1	K20-WYJ	D20-WYJ	49-882	49-281
WYJ-218-1	K20-WYJ	D20-WYJ	49-882	49-281
WYJ-219-1	K20-WYJ	D20-WYJ	49-882	49-281
WYJ-220-1	K20-WYJ	D20-WYJ	49-882	
WYJ-22-1	K20-WYJ	D20-WYJ	49-882	49-281
WYJ-221-1	K20-WYJ	D20-WYJ	49-882	49-281
WYJ-222-1	K20-WYJ	D20-WYJ	49-882	49-281
WYJ-223-1	K20-WYJ	D20-WYJ	49-882	49-281
WYJ-224-1	K20-WYJ	D20-WYJ	49-882	49-281
WYJ-225-1	K20-WYJ	D20-WYJ	49-882	49-281
WYJ-226-1	K20-WYJ	D20-WYJ	49-882	49-281
WYJ-227-1	K20-WYJ	D20-WYJ	49-882	49-281
WYJ-228-1	K20-WYJ	D20-WYJ	49-882	49-281
WYJ-229-1	K20-WYJ	D20-WYJ	49-882	49-281
WYJ-230-1	K20-WYJ	D20-WYJ	49-882	49-281
WYJ-23-1	K20-WYJ	D20-WYJ	49-882	49-281
WYJ-231-1	K20-WYJ	D20-WYJ	49-882	49-281
WYJ-232-1	K20-WYJ	D20-WYJ	49-882	49-281
WYJ-233-1	K20-WYJ	D20-WYJ	49-882	49-281
WYJ-234-1	K20-WYJ	D20-WYJ	49-882	49-281
WYJ-235-1	K20-WYJ	D20-WYJ	49-882	49-281
WYJ-236-1	K20-WYJ	D20-WYJ	49-882	49-281
WYJ-237-1	K20-WYJ	D20-WYJ	49-882	49-281
WYJ-238-1	K20-WYJ	D20-WYJ	49-882	49-281
WYJ-239-1	K20-WYJ	D20-WYJ	49-882	49-281
WYJ-240-1	K20-WYJ	D20-WYJ	49-882	49-281
WYJ-24-1	K20-WYJ	D20-WYJ	49-882	49-281
WYJ-241-1	K20-WYJ	D20-WYJ	49-882	49-281
WYJ-242-1	K20-WYJ	D20-WYJ	49-882	49-281
WYJ-243-1	K20-WYJ	D20-WYJ	49-882	49-281
WYJ-244-1	K20-WYJ	D20-WYJ	49-882	49-281
WYJ-245-1	K20-WYJ	D20-WYJ	49-882	49-281
WYJ-246-1	K20-WYJ	D20-WYJ	49-882	49-281
WYJ-247-1	K20-WYJ	D20-WYJ	49-882	49-281
WYJ-248-1	K20-WYJ	D20-WYJ	49-882	49-281
WYJ-249-1	K20-WYJ	D20-WYJ	49-882	49-281
WYJ-250-1	K20-WYJ	D20-WYJ	49-882	49-281
WYJ-252-1	K20-WYJ	D20-WYJ	49-882	49-281
WYJ-253-1	K20-WYJ	D20-WYJ	49-882	49-281
WYJ-255-1	K20-WYJ	D20-WYJ	49-882	49-281
WYJ-256-1	K20-WYJ	D20-WYJ	49-882	49-281
WYJ-257-1	K20-WYJ	D20-WYJ	49-882	49-281
WYJ-258-1	K20-WYJ	D20-WYJ	49-882	49-281

OEM CARBURETOR			OREGON	
Model	Kit	Gaskets	Kit	Gaskets
Walbro				
WYJ-259-1	K20-WYJ	D20-WYJ	49-882	49-281
WYJ-260-1	K20-WYJ	D20-WYJ	49-882	49-281
WYJ-261-1	K20-WYJ	D20-WYJ	49-882	49-281
WYJ-262-1	K20-WYJ	D20-WYJ	49-882	49-281
WYJ-263-1	K20-WYJ	D20-WYJ	49-882	49-281
WYJ-264-1	K20-WYJ	D20-WYJ	49-882	49-281
WYJ-265-1	K20-WYJ	D20-WYJ	49-882	49-281
WYJ-267-1	K20-WYJ	D20-WYJ	49-882	49-281
WYJ-268-1	K20-WYJ	D20-WYJ	49-882	49-281
WYJ-269-1	K20-WYJ	D20-WYJ	49-882	49-281
WYJ-270-1	K20-WYJ	D20-WYJ	49-882	49-281
WYJ-27-1	K20-WYJ	D20-WYJ	49-882	49-281
WYJ-271-1	K20-WYJ	D20-WYJ	49-882	49-281
WYJ-273-1	K20-WYJ	D20-WYJ	49-882	49-281
WYJ-274-1	K20-WYJ	D20-WYJ	49-882	49-281
WYJ-275-1	K20-WYJ	D20-WYJ	49-882	49-281
WYJ-276-1	K20-WYJ	D20-WYJ	49-882	49-281
WYJ-278-1	K20-WYJ	D20-WYJ	49-882	49-281
WYJ-279-1	K20-WYJ	D20-WYJ	49-882	49-281
WYJ-280-1	K20-WYJ	D20-WYJ	49-882	49-281
WYJ-28-1	K20-WYJ	D20-WYJ	49-882	49-281
WYJ-281-1	K20-WYJ	D20-WYJ	49-882	49-281
WYJ-282-1	K20-WYJ	D20-WYJ	49-882	49-281
WYJ-283-1	K20-WYJ	D20-WYJ	49-882	49-281
WYJ-284-1	K20-WYJ	D20-WYJ	49-882	49-281
WYJ-285-1	K20-WYJ	D20-WYJ	49-882	49-281
WYJ-286-1	K20-WYJ	D20-WYJ	49-882	49-281
WYJ-288-1	K20-WYJ	D20-WYJ	49-882	49-281
WYJ-289-1	K20-WYJ	D20-WYJ	49-882	49-281
WYJ-290-1	K20-WYJ	D20-WYJ	49-882	49-281
WYJ-29-1	K20-WYJ	D20-WYJ	49-882	49-281
WYJ-291-1	K20-WYJ	D20-WYJ	49-882	49-281
WYJ-292-1	K20-WYJ	D20-WYJ	49-882	49-281
WYJ-293-1	K20-WYJ	D20-WYJ	49-882	49-281
WYJ-294-1	K20-WYJ	D20-WYJ	49-882	49-281
WYJ-295-1	K20-WYJ	D20-WYJ	49-882	49-281
WYJ-296-1	K20-WYJ	D20-WYJ	49-882	49-281
WYJ-297-1	K20-WYJ	D20-WYJ	49-882	49-281
WYJ-298-1	K20-WYJ	D20-WYJ	49-882	49-281
WYJ-299-1	K20-WYJ	D20-WYJ	49-882	49-281
WYJ-300-1	K20-WYJ	D20-WYJ	49-882	49-281
WYJ-30-1	K20-WYJ	D20-WYJ	49-882	49-281
WYJ-301-1	K20-WYJ	D20-WYJ	49-882	49-281
WYJ-302-1	K20-WYJ	D20-WYJ	49-882	49-281
WYJ-303-1	K20-WYJ	D20-WYJ	49-882	49-281
WYJ-304-1	K20-WYJ	D20-WYJ	49-882	49-281
WYJ-305-1	K20-WYJ	D20-WYJ	49-882	49-281
WYJ-306-1	K20-WYJ	D20-WYJ	49-882	49-281
WYJ-307-1	K20-WYJ	D20-WYJ	49-882	49-281
WYJ-309-1	K20-WYJ	D20-WYJ	49-882	49-281
WYJ-3-1	K20-WYJ	D20-WYJ	49-882	49-281
WYJ-310-1	K20-WYJ	D20-WYJ	49-882	49-281
WYJ-31-1	K20-WYJ	D20-WYJ	49-882	49-281
WYJ-311-1	K20-WYJ	D20-WYJ	49-882	49-281
WYJ-312-1	K20-WYJ	D20-WYJ	49-882	49-281
WYJ-313-1	K20-WYJ	D20-WYJ	49-882	49-281
WYJ-314-1	K20-WYJ	D20-WYJ	49-882	49-281
WYJ-315-1	K20-WYJ	D20-WYJ	49-882	49-281
WYJ-316-1	K20-WYJ	D20-WYJ	49-882	49-281
WYJ-317-1	K20-WYJ	D20-WYJ	49-882	49-281
WYJ-318-1	K20-WYJ	D20-WYJ	49-882	49-281
WYJ-319-1	K20-WYJ	D20-WYJ	49-882	49-281
WYJ-320-1	K20-WYJ	D20-WYJ	49-882	49-281
WYJ-32-1	K20-WYJ	D20-WYJ	49-882	49-281
WYJ-322-1	K20-WYJ	D20-WYJ	49-882	49-281
WYJ-323-1	K20-WYJ	D20-WYJ	49-882	49-281
WYJ-324-1	K20-WYJ	D20-WYJ	49-882	49-281
WYJ-325-1	K20-WYJ	D20-WYJ	49-882	49-281
WYJ-326-1	K20-WYJ	D20-WYJ	49-882	49-281
WYJ-327-1	K20-WYJ	D20-WYJ	49-882	49-281
WYJ-328-1	K20-WYJ	D20-WYJ	49-882	49-281
WYJ-329-1	K20-WYJ	D20-WYJ	49-882	49-281
WYJ-330-1	K20-WYJ	D20-WYJ	49-882	49-281
WYJ-33-1	K20-WYJ	D20-WYJ	49-882	49-281
WYJ-331-1	K20-WYJ	D20-WYJ	49-882	49-281
WYJ-335-1	K20-WYJ	D20-WYJ	49-882	49-281
WYJ-336-1	K20-WYJ	D20-WYJ	49-882	49-281
WYJ-337-1	K20-WYJ	D20-WYJ	49-882	49-281

Carburetor Kit Reference

OEM CARBURETOR			OREGON	
Model	Kit	Gaskets	Kit	Gaskets
Walbro				
WYJ-338-1	K20-WYJ	D20-WYJ	49-882	49-281
WYJ-339-1	K20-WYJ	D20-WYJ	49-882	49-281
WYJ-340-1	K20-WYJ	D20-WYJ	49-882	49-281
WYJ-34-1	K20-WYJ	D20-WYJ	49-882	49-281
WYJ-341-1	K20-WYJ	D20-WYJ	49-882	49-281
WYJ-342-1	K20-WYJ	D20-WYJ	49-882	49-281
WYJ-343-1	K20-WYJ	D20-WYJ	49-882	49-281
WYJ-344-1	K20-WYJ	D20-WYJ	49-882	49-281
WYJ-345-1	K20-WYJ	D20-WYJ	49-882	49-281
WYJ-349-1	K20-WYJ	D20-WYJ	49-882	49-281
WYJ-350-1	K20-WYJ	D20-WYJ	49-882	49-281
WYJ-35-1	K20-WYJ	D20-WYJ	49-882	49-281
WYJ-352-1	K20-WYJ	D20-WYJ	49-882	49-281
WYJ-353-1	K20-WYJ	D20-WYJ	49-882	49-281
WYJ-355-1	K20-WYJ	D20-WYJ	49-882	49-281
WYJ-356-1	K20-WYJ	D20-WYJ	49-882	49-281
WYJ-357-1	K20-WYJ	D20-WYJ	49-882	49-281
WYJ-358-1	K20-WYJ	D20-WYJ	49-882	49-281
WYJ-360-1	K20-WYJ	D20-WYJ	49-882	49-281
WYJ-36-1	K20-WYJ	D20-WYJ	49-882	49-281
WYJ-362-1	K20-WYJ	D20-WYJ	49-882	49-281
WYJ-363-1	K20-WYJ	D20-WYJ	49-882	49-281
WYJ-364-1	K20-WYJ	D20-WYJ	49-882	49-281
WYJ-365-1	K20-WYJ	D20-WYJ	49-882	49-281
WYJ-366-1	K20-WYJ	D20-WYJ	49-882	49-281
WYJ-368-1	K20-WYJ	D20-WYJ	49-882	49-281
WYJ-369-1	K20-WYJ	D20-WYJ	49-882	49-281
WYJ-370-1	K20-WYJ	D20-WYJ	49-882	49-281
WYJ-37-1	K20-WYJ	D20-WYJ	49-882	49-281
WYJ-371-1	K20-WYJ	D20-WYJ	49-882	49-281
WYJ-373-1	K20-WYJ	D20-WYJ	49-882	49-281
WYJ-374-1	K20-WYJ	D20-WYJ	49-882	49-281
WYJ-376-1	K20-WYJ	D20-WYJ	49-882	49-281
WYJ-377-1	K20-WYJ	D20-WYJ	49-882	49-281
WYJ-378-1	K20-WYJ	D20-WYJ	49-882	49-281
WYJ-379-1	K20-WYJ	D20-WYJ	49-882	49-281
WYJ-38-1	K20-WYJ	D20-WYJ	49-882	49-281
WYJ-381-1	K20-WYJ	D20-WYJ	49-882	49-281
WYJ-382-1	K20-WYJ	D20-WYJ	49-882	49-281
WYJ-383-1	K20-WYJ	D20-WYJ	49-882	49-281
WYJ-384-1	K20-WYJ	D20-WYJ	49-882	49-281
WYJ-385-1	K20-WYJ	D20-WYJ	49-882	49-281
WYJ-386-1	K20-WYJ	D20-WYJ	49-882	49-281
WYJ-387-1	K20-WYJ	D20-WYJ	49-882	49-281
WYJ-388-1	K20-WYJ	D20-WYJ	49-882	49-281
WYJ-389-1	K20-WYJ	D20-WYJ	49-882	49-281
WYJ-390-1	K20-WYJ	D20-WYJ	49-882	49-281
WYJ-39-1	K20-WYJ	D20-WYJ	49-882	49-281
WYJ-391-1	K20-WYJ	D20-WYJ	49-882	49-281
WYJ-392-1	K20-WYJ	D20-WYJ	49-882	49-281
WYJ-393-1	K20-WYJ	D20-WYJ	49-882	49-281
WYJ-394-1	K20-WYJ	D20-WYJ	49-882	49-281
WYJ-395-1	K20-WYJ	D20-WYJ	49-882	49-281
WYJ-396-1	K20-WYJ	D20-WYJ	49-882	49-281
WYJ-397-1	K20-WYJ	D20-WYJ	49-882	49-281
WYJ-398-1	K20-WYJ	D20-WYJ	49-882	49-281
WYJ-399-1	K20-WYJ	D20-WYJ	49-882	49-281
WYJ-400-1	K20-WYJ	D20-WYJ	49-882	49-281
WYJ-40-1	K20-WYJ	D20-WYJ	49-882	49-281
WYJ-401-1	K20-WYJ	D20-WYJ	49-882	49-281
WYJ-402-1	K20-WYJ	D20-WYJ	49-882	49-281
WYJ-403-1	K20-WYJ	D20-WYJ	49-882	49-281
WYJ-404-1	K20-WYJ	D20-WYJ	49-882	49-281
WYJ-405-1	K20-WYJ	D20-WYJ	49-882	49-281
WYJ-406-1	K20-WYJ	D20-WYJ	49-882	49-281
WYJ-407-1	K20-WYJ	D20-WYJ	49-882	49-281
WYJ-408-1	K20-WYJ	D20-WYJ	49-882	49-281
WYJ-409-1	K20-WYJ	D20-WYJ	49-882	49-281
WYJ-4-1	K20-WYJ	D20-WYJ	49-882	49-281
WYJ-410-1	K20-WYJ	D20-WYJ	49-882	49-281
WYJ-41-1	K20-WYJ	D20-WYJ	49-882	49-281
WYJ-411-1	K20-WYJ	D20-WYJ	49-882	49-281
WYJ-412-1	K20-WYJ	D20-WYJ	49-882	49-281
WYJ-413-1	K20-WYJ	D20-WYJ	49-882	49-281
WYJ-414-1	K20-WYJ	D20-WYJ	49-882	49-281
WYJ-415-1	K20-WYJ	D20-WYJ	49-882	49-281
WYJ-416-1	K20-WYJ	D20-WYJ	49-882	49-281
WYJ-417-1	K20-WYJ	D20-WYJ	49-882	49-281

OEM CARBURETOR			OREGON	
Model	Kit	Gaskets	Kit	Gaskets
Walbro				
WYJ-418-1	K20-WYJ	D20-WYJ	49-882	49-281
WYJ-419-1	K20-WYJ	D20-WYJ	49-882	49-281
WYJ-420-1	K20-WYJ	D20-WYJ	49-882	49-281
WYJ-42-1	K20-WYJ	D20-WYJ	49-882	49-281
WYJ-421-1	K20-WYJ	D20-WYJ	49-882	49-281
WYJ-424-1	K20-WYJ	D20-WYJ	49-882	49-281
WYJ-425-1	K20-WYJ	D20-WYJ	49-882	49-281
WYJ-426-1	K20-WYJ	D20-WYJ	49-882	49-281
WYJ-428-1	K20-WYJ	D20-WYJ	49-882	49-281
WYJ-43-1	K20-WYJ	D20-WYJ	49-882	49-281
WYJ-431-1	K20-WYJ	D20-WYJ	49-882	49-281
WYJ-434-1	K20-WYJ	D20-WYJ	49-882	49-281
WYJ-435-1	K20-WYJ	D20-WYJ	49-882	49-281
WYJ-436-1	K20-WYJ	D20-WYJ	49-882	49-281
WYJ-438-1	K20-WYJ	D20-WYJ	49-882	49-281
WYJ-440-1	K20-WYJ	D20-WYJ	49-882	49-281
WYJ-44-1	K20-WYJ	D20-WYJ	49-882	49-281
WYJ-441-1	K20-WYJ	D20-WYJ	49-882	49-281
WYJ-442-1	K20-WYJ	D20-WYJ	49-882	49-281
WYJ-447-1	K20-WYJ	D20-WYJ	49-882	49-281
WYJ-450-1	K20-WYJ	D20-WYJ	49-882	49-281
WYJ-45-1	K20-WYJ	D20-WYJ	49-882	49-281
WYJ-451-1	K20-WYJ	D20-WYJ	49-882	49-281
WYJ-454-1	K20-WYJ	D20-WYJ	49-882	49-281
WYJ-455-1	K20-WYJ	D20-WYJ	49-882	49-281
WYJ-456-1	K20-WYJ	D20-WYJ	49-882	49-281
WYJ-457-1	K20-WYJ	D20-WYJ	49-882	49-281
WYJ-458-1	K20-WYJ	D20-WYJ	49-882	49-281
WYJ-460-1	K20-WYJ	D20-WYJ	49-882	49-281
WYJ-46-1	K20-WYJ	D20-WYJ	49-882	49-281
WYJ-461-1	K20-WYJ	D20-WYJ	49-882	49-281
WYJ-462-1	K20-WYJ	D20-WYJ	49-882	49-281
WYJ-463-1	K20-WYJ	D20-WYJ	49-882	49-281
WYJ-464-1	K20-WYJ	D20-WYJ	49-882	49-281
WYJ-466-1	K20-WYJ	D20-WYJ	49-882	49-281
WYJ-470-1	K20-WYJ	D20-WYJ	49-882	49-281
WYJ-47-1	K20-WYJ	D20-WYJ	49-882	49-281
WYJ-471-1	K20-WYJ	D20-WYJ	49-882	49-281
WYJ-473-1	K20-WYJ	D20-WYJ	49-882	49-281
WYJ-475-1	K20-WYJ	D20-WYJ	49-882	49-281
WYJ-476-1	K20-WYJ	D20-WYJ	49-882	49-281
WYJ-477-1	K20-WYJ	D20-WYJ	49-882	49-281
WYJ-478-1	K20-WYJ	D20-WYJ	49-882	49-281
WYJ-48-1	K20-WYJ	D20-WYJ	49-882	49-281
WYJ-488-1	K20-WYJ	D20-WYJ	49-882	49-281
WYJ-49-1	K20-WYJ	D20-WYJ	49-882	49-281
WYJ-50-1	K20-WYJ	D20-WYJ	49-882	49-281
WYJ-502-1	K20-WYJ	D20-WYJ	49-882	49-281
WYJ-503-1	K20-WYJ	D20-WYJ	49-882	49-281
WYJ-508-1	K20-WYJ	D20-WYJ	49-882	49-281
WYJ-5-1	K20-WYJ	D20-WYJ	49-882	49-281
WYJ-51-1	K20-WYJ	D20-WYJ	49-882	49-281
WYJ-52-1	K20-WYJ	D20-WYJ	49-882	49-281
WYJ-53-1	K20-WYJ	D20-WYJ	49-882	49-281
WYJ-54-1	K20-WYJ	D20-WYJ	49-882	49-281
WYJ-55-1	K20-WYJ	D20-WYJ	49-882	49-281
WYJ-56-1	K20-WYJ	D20-WYJ	49-882	49-281
WYJ-57-1	K20-WYJ	D20-WYJ	49-882	49-281
WYJ-58-1	K20-WYJ	D20-WYJ	49-882	49-281
WYJ-59-1	K20-WYJ	D20-WYJ	49-882	49-281
WYJ-60-1	K20-WYJ	D20-WYJ	49-882	49-281
WYJ-6-1	K20-WYJ	D20-WYJ	49-882	49-281
WYJ-61-1	K20-WYJ	D20-WYJ	49-882	49-281
WYJ-62-1	K20-WYJ	D20-WYJ	49-882	49-281
WYJ-63-1	K20-WYJ	D20-WYJ	49-882	49-281
WYJ-64-1	K20-WYJ	D20-WYJ	49-882	49-281
WYJ-65-1	K20-WYJ	D20-WYJ	49-882	49-281
WYJ-66-1	K20-WYJ	D20-WYJ	49-882	49-281
WYJ-67-1	K20-WYJ	D20-WYJ	49-882	49-281
WYJ-68-1	K20-WYJ	D20-WYJ	49-882	49-281
WYJ-69-1	K20-WYJ	D20-WYJ	49-882	49-281
WYJ-70-1	K20-WYJ	D20-WYJ	49-882	49-281
WYJ-7-1	K20-WYJ	D20-WYJ	49-882	49-281
WYJ-71-1	K20-WYJ	D20-WYJ	49-882	49-281
WYJ-72-1	K20-WYJ	D20-WYJ	49-882	49-281
WYJ-73-1	K20-WYJ	D20-WYJ	49-882	49-281
WYJ-74-1	K20-WYJ	D20-WYJ	49-882	49-281
WYJ-75-1	K20-WYJ	D20-WYJ	49-882	49-281

OEM CARBURETOR			OREGON	
Model	Kit	Gaskets	Kit	Gaskets
Walbro				
WYJ-76-1	K20-WYJ	D20-WYJ	49-882	49-281
WYJ-77-1	K20-WYJ	D20-WYJ	49-882	49-281
WYJ-78-1	K20-WYJ	D20-WYJ	49-882	49-281
WYJ-79-1	K20-WYJ	D20-WYJ	49-882	49-281
WYJ-80-1	K20-WYJ	D20-WYJ	49-882	49-281
WYJ-8-1	K20-WYJ	D20-WYJ	49-882	49-281
WYJ-81-1	K20-WYJ	D20-WYJ	49-882	49-281
WYJ-82-1	K20-WYJ	D20-WYJ	49-882	49-281
WYJ-83-1	K20-WYJ	D20-WYJ	49-882	49-281
WYJ-84-1	K20-WYJ	D20-WYJ	49-882	49-281
WYJ-86-1	K20-WYJ	D20-WYJ	49-882	49-281
WYJ-88-1	K20-WYJ	D20-WYJ	49-882	49-281
WYJ-89-1	K20-WYJ	D20-WYJ	49-882	49-281
WYJ-9-1	K20-WYJ	D20-WYJ	49-882	49-281
WYJ-91-1	K20-WYJ	D20-WYJ	49-882	49-281
WYJ-92-1	K20-WYJ	D20-WYJ	49-882	49-281
WYJ-93-1	K20-WYJ	D20-WYJ	49-882	49-281
WYJ-94-1	K20-WYJ	D20-WYJ	49-882	49-281
WYJ-96-1	K20-WYJ	D20-WYJ	49-882	49-281
WYJ-97-1	K20-WYJ	D20-WYJ	49-882	49-281
WYJ-98-1	K20-WYJ	D20-WYJ	49-882	49-281
WYJ-99-1	K20-WYJ	D20-WYJ	49-882	49-281
WYL-100-1	K20-WYL	D11-WYL	49-316	49-317
WYL-10-1	K20-WYL	D11-WYL	49-316	49-317
WYL-101-1	K20-WYL	D11-WYL	49-316	49-317
WYL-102-1	K20-WYL	D11-WYL	49-316	49-317
WYL-103-1	K20-WYL	D11-WYL	49-316	49-317
WYL-104-1	K20-WYL	D11-WYL	49-316	49-317
WYL-105-1	K20-WYL	D11-WYL	49-316	49-317
WYL-106-1	K20-WYL	D11-WYL	49-316	49-317
WYL-107-1	K20-WYL	D11-WYL	49-316	49-317
WYL-108-1	K20-WYL	D11-WYL	49-316	49-317
WYL-109-1	K20-WYL	D11-WYL	49-316	49-317
WYL-1-1	K20-WYL	D11-WYL	49-316	49-317
WYL-110-1	K20-WYL	D11-WYL	49-316	49-317
WYL-11-1	K20-WYL	D11-WYL	49-316	49-317
WYL-111-1	K20-WYL	D11-WYL	49-316	49-317
WYL-112-1	K20-WYL	D11-WYL	49-316	49-317
WYL-113-1	K20-WYL	D11-WYL	49-316	49-317
WYL-115-1	K20-WYL	D11-WYL	49-316	49-317
WYL-116-1	K20-WYL	D11-WYL	49-316	49-317
WYL-117-1	K20-WYL	D11-WYL	49-316	49-317
WYL-118-1	K20-WYL	D11-WYL	49-316	49-317
WYL-119-1	K20-WYL	D11-WYL	49-316	49-317
WYL-120-1	K20-WYL	D11-WYL	49-316	49-317
WYL-12-1	K20-WYL	D11-WYL	49-316	49-317
WYL-121-1	K20-WYL	D11-WYL	49-316	49-317
WYL-122-1	K20-WYL	D11-WYL	49-316	49-317
WYL-123-1	K20-WYL	D11-WYL	49-316	49-317
WYL-124-1	K20-WYL	D11-WYL	49-316	49-317
WYL-125-1	K20-WYL	D11-WYL	49-316	49-317
WYL-126-1	K20-WYL	D11-WYL	49-316	49-317
WYL-127-1	K20-WYL	D11-WYL	49-316	49-317
WYL-128-1	K20-WYL	D11-WYL	49-316	49-317
WYL-129-1	K20-WYL	D11-WYL	49-316	49-317
WYL-130-1	K20-WYL	D11-WYL	49-316	49-317
WYL-13-1	K20-WYL	D11-WYL	49-316	49-317
WYL-131-1	K20-WYL	D11-WYL	49-316	49-317
WYL-132-1	K20-WYL	D11-WYL	49-316	49-317
WYL-133-1	K20-WYL	D11-WYL	49-316	49-317
WYL-134-1	K20-WYL	D11-WYL	49-316	49-317
WYL-135-1	K20-WYL	D11-WYL	49-316	49-317
WYL-137-1	K20-WYL	D11-WYL	49-316	49-317
WYL-138-1	K20-WYL	D11-WYL	49-316	49-317
WYL-139-1	K20-WYL	D11-WYL	49-316	49-317
WYL-140-1	K20-WYL	D11-WYL	49-316	49-317
WYL-14-1	K20-WYL	D11-WYL	49-316	49-317
WYL-141-1	K20-WYL	D11-WYL	49-316	49-317
WYL-142-1	K20-WYL	D11-WYL	49-316	49-317
WYL-143-1	K20-WYL	D11-WYL	49-316	49-317
WYL-144-1	K20-WYL	D11-WYL	49-316	49-317
WYL-145-1	K20-WYL	D11-WYL	49-316	49-317
WYL-146-1	K20-WYL	D11-WYL	49-316	49-317
WYL-147-1	K20-WYL	D11-WYL	49-316	49-317
WYL-148-1	K20-WYL	D11-WYL	49-316	49-317
WYL-149-1	K20-WYL	D11-WYL	49-316	49-317
WYL-150-1	K20-WYL	D11-WYL	49-316	49-317
WYL-15-1	K20-WYL	D11-WYL	49-316	49-317

C

OEM CARBURETOR			OREGON	
Model	Kit	Gaskets	Kit	Gaskets
Walbro				
WYL-152-1	K20-WYL	D11-WYL	49-316	49-317
WYL-153-1	K20-WYL	D11-WYL	49-316	49-317
WYL-154-1	K20-WYL	D11-WYL	49-316	49-317
WYL-155-1	K20-WYL	D11-WYL	49-316	49-317
WYL-156-1	K20-WYL	D11-WYL	49-316	49-317
WYL-157-1	K20-WYL	D11-WYL	49-316	49-317
WYL-158-1	K20-WYL	D11-WYL	49-316	49-317
WYL-159-1	K20-WYL	D11-WYL	49-316	49-317
WYL-160-1	K20-WYL	D11-WYL	49-316	49-317
WYL-16-1	K20-WYL	D11-WYL	49-316	49-317
WYL-161-1	K20-WYL	D11-WYL	49-316	49-317
WYL-162-1	K20-WYL	D11-WYL	49-316	49-317
WYL-163-1	K20-WYL	D11-WYL	49-316	49-317
WYL-164-1	K20-WYL	D11-WYL	49-316	49-317
WYL-165-1	K20-WYL	D11-WYL	49-316	49-317
WYL-166-1	K20-WYL	D11-WYL	49-316	49-317
WYL-167-1	K20-WYL	D11-WYL	49-316	49-317
WYL-168-1	K20-WYL	D11-WYL	49-316	49-317
WYL-169-1	K20-WYL	D11-WYL	49-316	49-317
WYL-170-1	K20-WYL	D11-WYL	49-316	49-317
WYL-17-1	K20-WYL	D11-WYL	49-316	49-317
WYL-171-1	K20-WYL	D11-WYL	49-316	49-317
WYL-172	K20-WYL	D11-WYL	49-316	49-317
WYL-173-1	K20-WYL	D11-WYL	49-316	49-317
WYL-174-1	K20-WYL	D11-WYL	49-316	49-317
WYL-175-1	K20-WYL	D11-WYL	49-316	49-317
WYL-176-1	K20-WYL	D11-WYL	49-316	49-317
WYL-177-1	K20-WYL	D11-WYL	49-316	49-317
WYL-178-1	K20-WYL	D11-WYL	49-316	49-317
WYL-180-1	K20-WYL	D11-WYL	49-316	49-317
WYL-18-1	K20-WYL	D11-WYL	49-316	49-317
WYL-181-1	K20-WYL	D11-WYL	49-316	49-317
WYL-182-1	K20-WYL	D11-WYL	49-316	49-317
WYL-183-1	K20-WYL	D11-WYL	49-316	49-317
WYL-184-1	K20-WYL	D11-WYL	49-316	49-317
WYL-185-1	K20-WYL	D11-WYL	49-316	49-317
WYL-186-1	K20-WYL	D11-WYL	49-316	49-317
WYL-187-1	K20-WYL	D11-WYL	49-316	49-317
WYL-188-1	K20-WYL	D11-WYL	49-316	49-317
WYL-190-1	K20-WYL	D11-WYL	49-316	49-317
WYL-19-1	K20-WYL	D11-WYL	49-316	49-317
WYL-191-1	K20-WYL	D11-WYL	49-316	49-317
WYL-192-1	K20-WYL	D11-WYL	49-316	49-317
WYL-196-1	K20-WYL	D11-WYL	49-316	49-317
WYL-197-1	K20-WYL	D11-WYL	49-316	49-317
WYL-198-1	K20-WYL	D11-WYL	49-316	49-317
WYL-199-1	K20-WYL	D11-WYL	49-316	49-317
WYL-200-1	K20-WYL	D11-WYL	49-316	49-317
WYL-20-1	K20-WYL	D11-WYL	49-316	49-317
WYL-201-1	K20-WYL	D11-WYL	49-316	49-317
WYL-202-1	K20-WYL	D11-WYL	49-316	49-317
WYL-203-1	K20-WYL	D11-WYL	49-316	49-317
WYL-204-1	K20-WYL	D11-WYL	49-316	49-317
WYL-205-1	K20-WYL	D11-WYL	49-316	49-317
WYL-207-1	K20-WYL	D11-WYL	49-316	49-317
WYL-208-1	K20-WYL	D11-WYL	49-316	49-317
WYL-2-1	K20-WYL	D11-WYL	49-316	49-317
WYL-210-1	K20-WYL	D11-WYL	49-316	49-317
WYL-21-1	K20-WYL	D11-WYL	49-316	49-317
WYL-211-1	K20-WYL	D11-WYL	49-316	49-317
WYL-212-1	K20-WYL	D11-WYL	49-316	49-317
WYL-213-1	K20-WYL	D11-WYL	49-316	49-317
WYL-214-1	K20-WYL	D11-WYL	49-316	49-317
WYL-215-1	K20-WYL	D11-WYL	49-316	49-317
WYL-216-1	K20-WYL	D11-WYL	49-316	49-317
WYL-217-1	K20-WYL	D11-WYL	49-316	49-317
WYL-218-1	K20-WYL	D11-WYL	49-316	49-317
WYL-219-1	K20-WYL	D11-WYL	49-316	49-317
WYL-220-1	K20-WYL	D11-WYL	49-316	49-317
WYL-221-1	K20-WYL	D11-WYL	49-316	49-317
WYL-222-1	K20-WYL	D11-WYL	49-316	49-317
WYL-223-1	K20-WYL	D11-WYL	49-316	49-317
WYL-224-1	K20-WYL	D11-WYL	49-316	49-317
WYL-225-1	K20-WYL	D11-WYL	49-316	49-317
WYL-226-1	K20-WYL	D11-WYL	49-316	49-317
WYL-227-1	K20-WYL	D11-WYL	49-316	49-317
WYL-229-1	K20-WYL	D11-WYL	49-316	49-317
WYL-230-1	K20-WYL	D11-WYL	49-316	49-317

OEM CARBURETOR			OREGON	
Model	Kit	Gaskets	Kit	Gaskets
Walbro				
WYL-23-1	K20-WYL	D11-WYL	49-316	49-317
WYL-231-1	K20-WYL	D11-WYL	49-316	49-317
WYL-233-1	K20-WYL	D11-WYL	49-316	49-317
WYL-234-1	K20-WYL	D11-WYL	49-316	49-317
WYL-235-1	K20-WYL	D11-WYL	49-316	49-317
WYL-236-1	K20-WYL	D11-WYL	49-316	49-317
WYL-237-1	K20-WYL	D11-WYL	49-316	49-317
WYL-238-1	K20-WYL	D11-WYL	49-316	49-317
WYL-239-1	K20-WYL	D11-WYL	49-316	49-317
WYL-240-1	K20-WYL	D11-WYL	49-316	49-317
WYL-24-1	K20-WYL	D11-WYL	49-316	49-317
WYL-241-1	K20-WYL	D11-WYL	49-316	49-317
WYL-242-1	K20-WYL	D11-WYL	49-316	49-317
WYL-247-1	K20-WYL	D11-WYL	49-316	49-317
WYL-25-1	K20-WYL	D11-WYL	49-316	49-317
WYL-254-1	K20-WYL	D11-WYL	49-316	49-317
WYL-255-1	K20-WYL	D11-WYL	49-316	49-317
WYL-256-1	K20-WYL	D11-WYL	49-316	49-317
WYL-259-1	K20-WYL	D11-WYL	49-316	49-317
WYL-26-1	K20-WYL	D11-WYL	49-316	49-317
WYL-261-1	K20-WYL	D11-WYL	49-316	49-317
WYL-27-1	K20-WYL	D11-WYL	49-316	49-317
WYL-280-1	K20-WYL	D11-WYL	49-316	49-317
WYL-28-1	K20-WYL	D11-WYL	49-316	49-317
WYL-283-1	K20-WYL	D11-WYL	49-316	49-317
WYL-29-1	K20-WYL	D11-WYL	49-316	49-317
WYL-295-1	K20-WYL	D11-WYL	49-316	49-317
WYL-296-1	K20-WYL	D11-WYL	49-316	49-317
WYL-297-1	K20-WYL	D11-WYL	49-316	49-317
WYL-30-1	K20-WYL	D11-WYL	49-316	49-317
WYL-3-1	K20-WYL	D11-WYL	49-316	49-317
WYL-31-1	K20-WYL	D11-WYL	49-316	49-317
WYL-32-1	K20-WYL	D11-WYL	49-316	49-317
WYL-33-1	K20-WYL	D11-WYL	49-316	49-317
WYL-34-1	K20-WYL	D11-WYL	49-316	49-317
WYL-35-1	K20-WYL	D11-WYL	49-316	49-317
WYL-36-1	K20-WYL	D11-WYL	49-316	49-317
WYL-37-1	K20-WYL	D11-WYL	49-316	49-317
WYL-38-1	K20-WYL	D11-WYL	49-316	49-317
WYL-40-1	K20-WYL	D11-WYL	49-316	49-317
WYL-4-1	K20-WYL	D11-WYL	49-316	49-317
WYL-41-1	K20-WYL	D11-WYL	49-316	49-317
WYL-42-1	K20-WYL	D11-WYL	49-316	49-317
WYL-43-1	K20-WYL	D11-WYL	49-316	49-317
WYL-44-1	K20-WYL	D11-WYL	49-316	49-317
WYL-45-1	K20-WYL	D11-WYL	49-316	49-317
WYL-46-1	K20-WYL	D11-WYL	49-316	49-317
WYL-47-1	K20-WYL	D11-WYL	49-316	49-317
WYL-48-1	K20-WYL	D11-WYL	49-316	49-317
WYL-49-1	K20-WYL	D11-WYL	49-316	49-317
WYL-50-1	K20-WYL	D11-WYL	49-316	49-317
WYL-51-1	K20-WYL	D11-WYL	49-316	49-317
WYL-52-1	K20-WYL	D11-WYL	49-316	49-317
WYL-53-1	K20-WYL	D11-WYL	49-316	49-317
WYL-54-1	K20-WYL	D11-WYL	49-316	49-317
WYL-55-1	K20-WYL	D11-WYL	49-316	49-317
WYL-56-1	K20-WYL	D11-WYL	49-316	49-317
WYL-57-1	K20-WYL	D11-WYL	49-316	49-317
WYL-58-1	K20-WYL	D11-WYL	49-316	49-317
WYL-59-1	K20-WYL	D11-WYL	49-316	49-317
WYL-60-1	K20-WYL	D11-WYL	49-316	49-317
WYL-6-1	K20-WYL	D11-WYL	49-316	49-317
WYL-61-1	K20-WYL	D11-WYL	49-316	49-317
WYL-62-1	K20-WYL	D11-WYL	49-316	49-317
WYL-63-1	K20-WYL	D11-WYL	49-316	49-317
WYL-64-1	K20-WYL	D11-WYL	49-316	49-317
WYL-65-1	K20-WYL	D11-WYL	49-316	49-317
WYL-66-1	K20-WYL	D11-WYL	49-316	49-317
WYL-67-1	K20-WYL	D11-WYL	49-316	49-317
WYL-68-1	K20-WYL	D11-WYL	49-316	49-317
WYL-69-1	K20-WYL	D11-WYL	49-316	49-317
WYL-70-1	K20-WYL	D11-WYL	49-316	49-317
WYL-7-1	K20-WYL	D11-WYL	49-316	49-317
WYL-71-1	K20-WYL	D11-WYL	49-316	49-317
WYL-72-1	K20-WYL	D11-WYL	49-316	49-317
WYL-73-1	K20-WYL	D11-WYL	49-316	49-317
WYL-74-1	K20-WYL	D11-WYL	49-316	49-317
WYL-75-1	K20-WYL	D11-WYL	49-316	49-317

OEM CARBURETOR			OREGON	
Model	Kit	Gaskets	Kit	Gaskets
Walbro				
WYL-76-1	K20-WYL	D11-WYL	49-316	49-317
WYL-77-1	K20-WYL	D11-WYL	49-316	49-317
WYL-78-1	K20-WYL	D11-WYL	49-316	49-317
WYL-79-1	K20-WYL	D11-WYL	49-316	49-317
WYL-80-1	K20-WYL	D11-WYL	49-316	49-317
WYL-8-1	K20-WYL	D11-WYL	49-316	49-317
WYL-81-1	K20-WYL	D11-WYL	49-316	49-317
WYL-82-1	K20-WYL	D11-WYL	49-316	49-317
WYL-83-1	K20-WYL	D11-WYL	49-316	49-317
WYL-84-1	K20-WYL	D11-WYL	49-316	49-317
WYL-85-1	K20-WYL	D11-WYL	49-316	49-317
WYL-87-1	K20-WYL	D11-WYL	49-316	49-317
WYL-88-1	K20-WYL	D11-WYL	49-316	49-317
WYL-90-1	K20-WYL	D11-WYL	49-316	49-317
WYL-9-1	K20-WYL	D11-WYL	49-316	49-317
WYL-91-1	K20-WYL	D11-WYL	49-316	49-317
WYL-92-1	K20-WYL	D11-WYL	49-316	49-317
WYL-93-1	K20-WYL	D11-WYL	49-316	49-317
WYL-94-1	K20-WYL	D11-WYL	49-316	49-317
WYL-95-1	K20-WYL	D11-WYL	49-316	49-317
WYL-96-1	K20-WYL	D11-WYL	49-316	49-317
WYL-97-1	K20-WYL	D11-WYL	49-316	49-317
WYL-98-1	K20-WYL	D11-WYL	49-316	49-317
WYL-99-1	K20-WYL	D11-WYL	49-316	49-317
Zama				
C1-M2B	RB-01	GND-01	49-861	49-854
C1M-EL28,A	RB-130	GND-71		
C1M-EL35	RB-144	GND-80		
C1M-EL37,A-B	RB-145	GND-81		
C1M-EL40A-B	RB-154	GND-87		
C1M-FR1,A-B	RB-70	GND-43		
C1M-H57	RB-57	GND-43		
C1M-H58,A-B	RB-57	GND-43		
C1M-H58C-D	RB-127	GND-43		
C1M-H65	RB-159	GND-90		
C1M-K24,A-B	RB-44	GND-31	49-903	
C1M-K25,A-B	RB-44	GND-31	49-903	
C1M-K37,A-D	RB-61	GND-31	49-906	
C1M-K49,A-C	RB-44	GND-31	49-903	
C1M-K76	RB-44	GND-31	49-903	
C1M-K77	RB-124	GND-67		
C1M-S141A-D	RB-155	GND-88		49-323
C1M-S142A-D	RB-155	GND-88		49-323
C1M-S144,A-B	RB-164	GND-88	49-318	49-323
C1M-S145A-B	RB-155	GND-88		49-323
C1M-S146A-B	RB-155	GND-88		49-323
C1M-S151,A-B	RB-155	GND-88		49-323
C1M-W26,A-C	RB-129	GND-70	49-277	
C1M-W44	RB-168	GND-97		
C1Q-120001B		GND-35		49-924
C1Q-120002B		GND-35		49-924
C1Q-CP1		GND-27		49-921
C1Q-DM1	RB-72	GND-35		
C1Q-DM1		GND-35		49-924
C1Q-DM10		GND-35		49-924
C1Q-DM10A		GND-35		49-924
C1Q-DM10A-B	RB-72	GND-35		
C1Q-DM10B		GND-35		49-924
C1Q-DM13		GND-27		49-921
C1Q-DM13,A-B	RB-119	GND-27		
C1Q-DM13A		GND-27		49-921
C1Q-DM13B		GND-27		49-921
C1Q-DM14		GND-27		49-921
C1Q-DM14,A	RB-119	GND-27		
C1Q-DM14A		GND-27		49-921
C1Q-DM15		GND-35		49-924
C1Q-DM15A		GND-35		49-924
C1Q-DM16		GND-35		49-924
C1Q-DM6		GND-35		49-924
C1Q-DM6,A	RB-72	GND-35		
C1Q-DM6A		GND-35		49-924
C1Q-DM7		GND-35		49-924
C1Q-DM7,A	RB-72	GND-35		
C1Q-DM7A		GND-35		49-924
C1Q-DM8		GND-35		49-924
C1Q-DM8,A-B	RB-72	GND-35		

Carburetor Kit Reference

OEM CARBURETOR			OREGON	
Model	Kit	Gaskets	Kit	Gaskets
Zama				
C1Q-DM8A		GND-35		49-924
C1Q-DM8B		GND-35		49-924
C1Q-DM9		GND-35		49-924
C1Q-DM9,A-B	RB-72	GND-35		
C1Q-DM9A		GND-35		49-924
C1Q-DM9B		GND-35		49-924
C1Q-E10	RB-76	GND-41		
C1Q-E12	RB-76	GND-41		
C1Q-E3	RB-47	GND-18	49-272	
C1Q-E4	RB-47	GND-18	49-272	
C1Q-E5	RB-55	GND-39		
C1Q-E5A	RB-54	GND-27		
C1Q-E5A		GND-27		49-921
C1Q-E5B	RB-74	GND-27		
C1Q-E5B		GND-27		49-921
C1Q-E6,A	RB-47	GND-18	49-272	
C1Q-E7,A	RB-76	GND-41		
C1Q-EL1	RB-45	GND-33	49-438	49-884
C1Q-EL10	RB-45	GND-33	49-438	49-884
C1Q-EL11,A-B	RB-69	GND-39	49-904	
C1Q-EL12	RB-69	GND-39	49-904	
C1Q-EL13	RB-69	GND-39	49-904	
C1Q-EL14,A	RB-69	GND-39	49-904	
C1Q-EL19A-C	RB-108	GND-39		
C1Q-EL20A-C	RB-109	GND-59		
C1Q-EL21		GND-35		49-924
C1Q-EL21,A	RB-41	GND-35	49-898	
C1Q-EL21A		GND-35		49-924
C1Q-EL22		GND-35		49-924
C1Q-EL22,A	RB-41	GND-35	49-898	
C1Q-EL22A		GND-35		49-924
C1Q-EL23		GND-35		49-924
C1Q-EL23,A	RB-41	GND-35	49-898	
C1Q-EL23A		GND-35		49-924
C1Q-EL24,A	RB-69	GND-39	49-904	
C1Q-EL25,A	RB-69	GND-39	49-904	
C1Q-EL26,A	RB-69	GND-39	49-904	
C1Q-EL27	RB-41	GND-35	49-898	
C1Q-EL27		GND-35		49-924
C1Q-EL30,A	RB-118	GND-39		
C1Q-EL33,A	RB-137	GND-39		
C1Q-EL34	RB-138	GND-59		
C1Q-EL36A	RB-118	GND-39		
C1Q-EL38	RB-118	GND-39		
C1Q-EL39,A	RB-118	GND-39		
C1Q-EL5,A	RB-45	GND-33	49-438	49-884
C1Q-EL52		GND-35		49-924
C1Q-EL6	RB-45	GND-33	49-438	49-884
C1Q-EL7	RB-45	GND-33	49-438	49-884
C1Q-H14		GND-27		49-921
C1Q-H14,A-B	RB-39	GND-27	49-902	
C1Q-H14A		GND-27		49-921
C1Q-H14B		GND-27		49-921
C1Q-H17		GND-27		49-921
C1Q-H17A		GND-27		49-921
C1Q-H17A-D	RB-54	GND-27		
C1Q-H17B		GND-27		49-921
C1Q-H17C		GND-27		49-921
C1Q-H17D		GND-27		49-921
C1Q-H19		GND-27		49-921
C1Q-H19,A-C	RB-39	GND-27	49-902	
C1Q-H19A		GND-27		49-921
C1Q-H19B		GND-27		49-921
C1Q-H19C		GND-27		49-921
C1Q-H27	RB-39	GND-27	49-902	
C1Q-H27		GND-27		49-921
C1Q-H32		GND-27		49-921
C1Q-H32,A	RB-39	GND-27	49-902	
C1Q-H32A		GND-27		49-921
C1Q-H35	RB-54	GND-27		
C1Q-H35		GND-27		49-921
C1Q-H42	RB-54	GND-27		
C1Q-H42		GND-27		49-921
C1Q-H43	RB-54	GND-27		
C1Q-H43		GND-27		49-921
C1Q-H44	RB-54	GND-27		
C1Q-H44		GND-27		49-921
C1Q-H45	RB-54	GND-27		

OEM CARBURETOR			OREGON	
Model	Kit	Gaskets	Kit	Gaskets
Zama				
C1Q-H45		GND-27		49-921
C1Q-H64	RB-146	GND-82		
C1Q-K64,A	RB-56	GND-57		
C1Q-K73,A	RB-113	GND-61		
C1Q-K79	RB-56	GND-57		
C1Q-M24	RB-38	GND-27		
C1Q-M24		GND-27		49-921
C1Q-M25	RB-38	GND-27		
C1Q-M25		GND-27		49-921
C1Q-M26	RB-38	GND-27		
C1Q-M26		GND-27		49-921
C1Q-M27		GND-35		49-924
C1Q-M27,A-D	RB-39	GND-35	49-902	
C1Q-M27A		GND-35		49-924
C1Q-M27B		GND-35		49-924
C1Q-M27C		GND-35		49-924
C1Q-M27D		GND-35		49-924
C1Q-M28		GND-35		49-924
C1Q-M28,A-D	RB-39	GND-35	49-902	
C1Q-M28A		GND-35		49-924
C1Q-M28B		GND-35		49-924
C1Q-M28C		GND-35		49-924
C1Q-M28D		GND-35		49-924
C1Q-M31	RB-51	GND-39		
C1Q-M33		GND-35		49-924
C1Q-M33,A-D	RB-39	GND-35	49-902	
C1Q-M33A		GND-35		49-924
C1Q-M33B		GND-35		49-924
C1Q-M33C		GND-35		49-924
C1Q-M33D		GND-35		49-924
C1Q-M36		GND-35		49-924
C1Q-M36,A	RB-39	GND-35	49-902	
C1Q-M36A		GND-35		49-924
C1Q-M39	RB-38	GND-27		
C1Q-M39		GND-27		49-921
C1Q-M41	RB-51	GND-39		
C1Q-M43	RB-45	GND-33	49-438	49-884
C1Q-M44	RB-110	GND-33		49-884
C1Q-P18,A	RB-52	GND-18		
C1Q-P22,A-C	RB-52	GND-18		
C1Q-P24	RB-52	GND-18		
C1Q-P26,A-C	RB-52	GND-18		
C1Q-P8	RB-75	GND-47		
C1Q-S100	RB-134	GND-72		
C1Q-S100		GND-72		49-923
C1Q-S100A	RB-166	GND-93		
C1Q-S100A		GND-93		49-923
C1Q-S101	RB-134	GND-72		
C1Q-S101		GND-72		49-923
C1Q-S101A	RB-166	GND-93		
C1Q-S101A		GND-93		49-923
C1Q-S102		GND-35		49-924
C1Q-S102,A	RB-105	GND-35	49-273	
C1Q-S102A		GND-35		49-924
C1Q-S102B		GND-35		49-924
C1Q-S102C		GND-35		49-924
C1Q-S103	RB-69	GND-39	49-904	
C1Q-S104	RB-69	GND-39	49-904	
C1Q-S105	RB-99	GND-56	49-276	
C1Q-S106		GND-35		49-924
C1Q-S106,A	RB-105	GND-35	49-273	
C1Q-S106A		GND-35		49-924
C1Q-S107		GND-35		49-924
C1Q-S107,A	RB-105	GND-35	49-273	
C1Q-S107A		GND-35		49-924
C1Q-S107B		GND-35		49-924
C1Q-S107C		GND-35		49-924
C1Q-S108,A	RB-69	GND-39	49-904	
C1Q-S109,A	RB-69	GND-39	49-904	
C1Q-S11		GND-35		49-924
C1Q-S110		GND-55		49-923
C1Q-S110,A	RB-97	GND-55		
C1Q-S110A		GND-55		49-923
C1Q-S110B		GND-91		49-923
C1Q-S110B-C	RB-160	GND-91		
C1Q-S110C		GND-91		49-923
C1Q-S110D		GND-91		49-923
C1Q-S111	RB-99	GND-56	49-276	

OEM CARBURETOR			OREGON	
Model	Kit	Gaskets	Kit	Gaskets
Zama				
C1Q-S112,A	RB-148	GND-56		
C1Q-S113	RB-147	GND-50		
C1Q-S114	RB-132	GND-72		
C1Q-S114		GND-72		49-923
C1Q-S114A		GND-72		49-923
C1Q-S115,A-B	RB-99	GND-56	49-276	
C1Q-S116,A	RB-99	GND-56	49-276	
C1Q-S117	RB-152	GND-50		
C1Q-S118,A-B	RB-151	GND-84	49-319	49-313
C1Q-S119,A-B	RB-150	GND-56		
C1Q-S11A		GND-35		49-924
C1Q-S11B		GND-35		49-924
C1Q-S11C		GND-35		49-924
C1Q-S11C-E	RB-41	GND-35	49-898	
C1Q-S11D		GND-35		49-924
C1Q-S11E		GND-35		49-924
C1Q-S11G	RB-50	GND-35		
C1Q-S11G		GND-35		49-924
C1Q-S120,A-B	RB-150	GND-56		
C1Q-S121,A-B	RB-150	GND-56		
C1Q-S122,A-B	RB-150	GND-56		
C1Q-S123,A-B	RB-150	GND-56		
C1Q-S124,A	RB-69	GND-39	49-904	
C1Q-S125	RB-69	GND-39	49-904	
C1Q-S126	RB-69	GND-39	49-904	
C1Q-S127	RB-69	GND-39	49-904	
C1Q-S128	RB-69	GND-39	49-904	
C1Q-S129	RB-69	GND-39	49-904	
C1Q-S130		GND-93		49-923
C1Q-S130,A-B	RB-162	GND-93		
C1Q-S130A		GND-93		49-923
C1Q-S130B		GND-93		49-923
C1Q-S131,A-B	RB-165	GND-95		
C1Q-S132		GND-93		49-923
C1Q-S132,A-B	RB-162	GND-93		
C1Q-S132A		GND-93		49-923
C1Q-S132B		GND-93		49-923
C1Q-S133		GND-93		49-923
C1Q-S133,A	RB-162	GND-93		
C1Q-S133A		GND-93		49-923
C1Q-S134	RB-69	GND-39	49-904	
C1Q-S135	RB-69	GND-39	49-904	
C1Q-S136	RB-69	GND-39	49-904	
C1Q-S137	RB-77	GND-33	49-274	49-884
C1Q-S138	RB-89	GND-50	49-288	
C1Q-S139	RB-89	GND-50	49-288	
C1Q-S140,A	RB-158	GND-89		49-320
C1Q-S143	RB-157	GND-89		49-320
C1Q-S150	RB-161	GND-92		
C1Q-S152	RB-77	GND-33	49-274	49-884
C1Q-S153	RB-161	GND-92		
C1Q-S154	RB-169	GND-98		
C1Q-S155	RB-170	GND-98		
C1Q-S156	RB-171	GND-98		
C1Q-S157	RB-100	GND-56	49-441	
C1Q-S159	RB-173	GND-99		
C1Q-S16		GND-35		49-924
C1Q-S160	RB-161	GND-92		
C1Q-S161	RB-172	GND-98		
C1Q-S162	RB-172	GND-98		
C1Q-S165	RB-161	GND-92		
C1Q-S166	RB-161	GND-92		
C1Q-S167	RB-175	GND-100		
C1Q-S169	RB-161	GND-92		
C1Q-S16A	RB-41	GND-35	49-898	
C1Q-S16A		GND-35		49-924
C1Q-S170	RB-161	GND-92		
C1Q-S171,A	RB-165	GND-95		
C1Q-S183		GND-93		49-923
C1Q-S184		GND-93		49-923
C1Q-S185		GND-93		49-923
C1Q-S28,A-D	RB-66	GND-28		49-883
C1Q-S29,A-C	RB-66	GND-28		49-883
C1Q-S30,A-C	RB-66	GND-28		49-883
C1Q-S32	RB-69	GND-39	49-904	
C1Q-S33,A-B	RB-40	GND-28	49-437	49-883
C1Q-S34,A-H	RB-40	GND-28	49-437	49-883
C1Q-S35,A-B	RB-40	GND-28	49-437	49-883

C

OEM CARBURETOR			OREGON	
Model	Kit	Gaskets	Kit	Gaskets
Zama				
C1Q-S36,A-G	RB-40	GND-28	49-437	49-883
C1Q-S37		GND-35		49-924
C1Q-S37,A-B	RB-72	GND-35		
C1Q-S37A		GND-35		49-924
C1Q-S37B		GND-35		49-924
C1Q-S41,A	RB-66	GND-28		49-883
C1Q-S41B	RB-85	GND-51		
C1Q-S42B	RB-85	GND-51		
C1Q-S43,A-B	RB-77	GND-33	49-274	49-884
C1Q-S44,A	RB-66	GND-28		49-883
C1Q-S45	RB-66	GND-28		49-883
C1Q-S46		GND-35		49-924
C1Q-S46,A-B	RB-72	GND-35		
C1Q-S46A		GND-35		49-924
C1Q-S46B		GND-35		49-924
C1Q-S46C		GND-35		49-924
C1Q-S47	RB-85	GND-51		
C1Q-S48,A	RB-89	GND-50	49-288	
C1Q-S49,A-B	RB-83	GND-39		
C1Q-S50	RB-79	GND-39		
C1Q-S51,A-C	RB-40	GND-28	49-437	49-883
C1Q-S51D	RB-83	GND-39		
C1Q-S53,A	RB-85	GND-51		
C1Q-S54	RB-84	GND-50		
C1Q-S55	RB-89	GND-50	49-288	
C1Q-S56	RB-85	GND-51		
C1Q-S57,A-B	RB-77	GND-33	49-274	49-884
C1Q-S58	RB-89	GND-50	49-288	
C1Q-S59,A	RB-91	GND-39		
C1Q-S60	RB-85	GND-51		
C1Q-S61,A-E	RB-69	GND-39	49-904	
C1Q-S62	RB-93	GND-53		
C1Q-S63,A	RB-84	GND-50		
C1Q-S64	RB-89	GND-50	49-288	
C1Q-S66	RB-84	GND-50		
C1Q-S67	RB-96	GND-53		
C1Q-S68,A-D	RB-99	GND-56	49-276	
C1Q-S69A	RB-100	GND-56	49-441	
C1Q-S70	RB-100	GND-56	49-441	
C1Q-S70A	RB-161	GND-92		
C1Q-S71	RB-100	GND-56	49-441	
C1Q-S72	RB-97	GND-55		
C1Q-S72		GND-55		49-923
C1Q-S72B	RB-114	GND-55	49-287	
C1Q-S72B		GND-55		49-923
C1Q-S73	RB-100	GND-56	49-441	
C1Q-S74,A-D	RB-106	GND-58		
C1Q-S75		GND-35		49-924
C1Q-S75,A-B	RB-105	GND-35	49-273	
C1Q-S75A		GND-35		49-924
C1Q-S75B		GND-35		49-924
C1Q-S75C		GND-35		49-924
C1Q-S75D		GND-35		49-924
C1Q-S76		GND-35		49-924
C1Q-S76,A-B	RB-105	GND-35	49-273	
C1Q-S76A		GND-35		49-924
C1Q-S76B		GND-35		49-924
C1Q-S76C		GND-35		49-924
C1Q-S76D		GND-35		49-924
C1Q-S77		GND-35		49-924
C1Q-S77,A-B	RB-105	GND-35	49-273	
C1Q-S77A		GND-35		49-924
C1Q-S77B		GND-35		49-924
C1Q-S77C		GND-35		49-924
C1Q-S77D		GND-35		49-924
C1Q-S78	RB-84	GND-50		
C1Q-S79	RB-100	GND-56	49-441	
C1Q-S80B-C	RB-100	GND-56	49-441	
C1Q-S81	RB-114	GND-55	49-287	
C1Q-S81		GND-55		49-923
C1Q-S82	RB-89	GND-50	49-288	
C1Q-S83	RB-89	GND-50	49-288	
C1Q-S84		GND-35		49-924
C1Q-S84,A-C	RB-105	GND-35	49-273	
C1Q-S84A		GND-35		49-924
C1Q-S84B		GND-35		49-924
C1Q-S84C		GND-35		49-924
C1Q-S84D		GND-35		49-924

OEM CARBURETOR			OREGON	
Model	Kit	Gaskets	Kit	Gaskets
Zama				
C1Q-S84E		GND-35		49-924
C1Q-S85		GND-35		49-924
C1Q-S85,A-C	RB-105	GND-35	49-273	
C1Q-S85A		GND-35		49-924
C1Q-S85B		GND-35		49-924
C1Q-S85C		GND-35		49-924
C1Q-S85D		GND-35		49-924
C1Q-S85E		GND-35		49-924
C1Q-S86		GND-35		49-924
C1Q-S86,A-C	RB-105	GND-35	49-273	
C1Q-S86A		GND-35		49-924
C1Q-S86B		GND-35		49-924
C1Q-S86C		GND-35		49-924
C1Q-S86D		GND-35		49-924
C1Q-S86E		GND-35		49-924
C1Q-S87		GND-35		49-924
C1Q-S87,A-C	RB-105	GND-35	49-273	
C1Q-S87A		GND-35		49-924
C1Q-S87B		GND-35		49-924
C1Q-S87C		GND-35		49-924
C1Q-S87D		GND-35		49-924
C1Q-S87E		GND-35		49-924
C1Q-S88	RB-114	GND-55	49-287	
C1Q-S88		GND-55		49-923
C1Q-S89		GND-35		49-924
C1Q-S89,A-C	RB-105	GND-35	49-273	
C1Q-S89A		GND-35		49-924
C1Q-S89B		GND-35		49-924
C1Q-S89C		GND-35		49-924
C1Q-S89D		GND-35		49-924
C1Q-S89E		GND-35		49-924
C1Q-S90		GND-35		49-924
C1Q-S90,A-B	RB-105	GND-35	49-273	
C1Q-S90A		GND-35		49-924
C1Q-S90B		GND-35		49-924
C1Q-S90C		GND-35		49-924
C1Q-S90D		GND-35		49-924
C1Q-S91		GND-35		49-924
C1Q-S91,A	RB-105	GND-35	49-273	
C1Q-S91A		GND-35		49-924
C1Q-S91B		GND-35		49-924
C1Q-S91C		GND-35		49-924
C1Q-S92		GND-35		49-924
C1Q-S92,A	RB-105	GND-35	49-273	
C1Q-S92A		GND-35		49-924
C1Q-S92B		GND-35		49-924
C1Q-S92C		GND-35		49-924
C1Q-S93	RB-100	GND-56	49-441	
C1Q-S94	RB-84	GND-50		
C1Q-S95	RB-100	GND-56	49-441	
C1Q-S96,A-B	RB-69	GND-39	49-904	
C1Q-S97,A	RB-100	GND-56	49-441	
C1Q-S98	RB-132	GND-72		
C1Q-S98		GND-72		49-923
C1Q-S98A		GND-93		49-923
C1Q-S98A-B	RB-162	GND-93		
C1Q-S98B		GND-93		49-923
C1Q-S98C		GND-93		49-923
C1Q-S99	RB-134	GND-72		
C1Q-S99		GND-72		49-923
C1Q-S99A	RB-166	GND-93		
C1Q-S99A		GND-93		49-923
C1Q-SK10	RB-68	GND-17		49-880
C1Q-SK15	RB-68	GND-17		49-880
C1Q-SK16	RB-68	GND-17		49-880
C1Q-SK4	RB-40	GND-28	49-437	49-883
C1Q-SK5	RB-40	GND-28	49-437	49-883
C1Q-SK6,A	RB-40	GND-28	49-437	49-883
C1Q-SK7	RB-40	GND-28	49-437	49-883
C1Q-SK8	RB-68	GND-17		49-880
C1Q-SK9	RB-68	GND-17		49-880
C1Q-W11,A-G	RB-47	GND-18	49-272	
C1Q-W14		GND-27		49-921
C1Q-W14,A	RB-41	GND-27	49-898	
C1Q-W14A		GND-27		49-921
C1Q-W15	RB-38	GND-27		
C1Q-W15		GND-27		49-921
C1Q-W20		GND-27		49-921

OEM CARBURETOR			OREGON	
Model	Kit	Gaskets	Kit	Gaskets
Zama				
C1Q-W20,A-B	RB-41	GND-27	49-898	
C1Q-W20A		GND-27		49-921
C1Q-W20B		GND-27		49-921
C1Q-W29		GND-27		49-921
C1Q-W29,A-E	RB-38	GND-27		
C1Q-W29A		GND-27		49-921
C1Q-W29B		GND-27		49-921
C1Q-W29C		GND-27		49-921
C1Q-W29D		GND-27		49-921
C1Q-W29E		GND-27		49-921
C1Q-W2A	RB-39	GND-27	49-902	
C1Q-W2A		GND-27		49-921
C1Q-W31,A-B	rb-47	GND-18	49-272	
C1Q-W34,A	RB-47	GND-18	49-272	
C1Q-W35,A	RB-47	GND-18	49-272	
C1Q-W36.A	RB-47	GND-18	49-272	
C1Q-W37	RB-47	GND-18	49-272	
C1Q-W38	RB-47	GND-18	49-272	
C1Q-W39	RB-47	GND-18	49-272	
C1Q-W40	RB-47	GND-18	49-272	
C1Q-W41	RB-47	GND-18	49-272	
C1Q-W5		GND-27		49-921
C1Q-W5,A-C	RB-38	GND-27		
C1Q-W5A		GND-27		49-921
C1Q-W5B		GND-27		49-921
C1Q-W5C		GND-27		49-921
C1Q-W6		GND-27		49-921
C1Q-W6,A-C	RB-38	GND-27		
C1Q-W6A		GND-27		49-921
C1Q-W6B		GND-27		49-921
C1Q-W6C		GND-27		49-921
C1Q-W8	RB-72	GND-27		
C1Q-W8		GND-27		49-921
C1Q-W9		GND-27		49-921
C1Q-W9,A-E	RB-72	GND-27		
C1Q-W9A		GND-27		49-921
C1Q-W9B		GND-27		49-921
C1Q-W9C		GND-27		49-921
C1Q-W9D		GND-27		49-921
C1Q-W9E		GND-27		49-921
C1Q-Z4	RB-72	GND-35		
C1Q-Z4		GND-35		49-924
C1Q-Z5	RB-72	GND-35		
C1Q-Z5		GND-35		49-924
C1Q-Z6		GND-27		49-921
C1Q-Z6,A	RB-120	GND-27		
C1Q-Z6A		GND-27		49-921
C1Q-Z7		GND-27		49-921
C1Q-Z7,A	RB-120	GND-27		
C1Q-Z7A		GND-27		49-921
C1S-E1	RB-02	GND-02		49-881
C1S-E2	RB-02	GND-02		49-881
C1S-H2A	RB-03	GND-02		49-881
C1S-H3	RB-03	GND-02		49-881
C1S-H4A-C	RB-05	GND-02		49-881
C1S-H6A	RB-03	GND-02		49-881
C1S-H7	RB-03	GND-02		49-881
C1S-H8,A	RB-05	GND-02		49-881
C1S-K1,A-C	RB-06	GND-03		
C1S-K1D	RB-07	GND-04		49-282
C1S-K3A-C	RB-03	GND-02		49-881
C1S-K3D	RB-08	GND-06		49-896
C1S-K6A-B	RB-09	GND-05		49-895
C1S-M12	RB-10	GND-32	49-818-0	
C1S-M13	RB-10	GND-32	49-818-0	
C1S-M8	RB-10	GND-32	49-818-0	
C1S-M9	RB-10	GND-32	49-818-0	
C1S-S1,A-C	RB-11	GND-07		49-859
C1S-S2	RB-12	GND-07		49-859
C1S-S3,A-G	RB-13	GND-07		49-859
C1S-SK1	RB-13	GND-07		49-859
C1S-SK2	RB-13	GND-07		49-859
C1S-Z1,A-D	RB-14	GND-06		49-896
C1T-EL41A	RB-149	GND-83		
C1T-W33,A-B	RB-149	GND-83		
C1U-D1AB	RB-63	GND-17		49-880
C1U-D1B	RB-63	GND-17		49-880
C1U-DM4,A-C	RB-20	GND-12	49-864	49-855

C

Carburetor Kit Reference

OEM CARBURETOR			OREGON	
Model	Kit	Gaskets	Kit	Gaskets
Zama				
C1U-FD1	RB-48	GND-18		
C1U-H10,A-F	RB-20	GND-12	49-864	49-855
C1U-H11,A-K	RB-20	GND-12	49-864	49-855
C1U-H12,A-B	RB-20	GND-12	49-864	49-855
C1U-H12C-D	RB-29	GND-12	49-285	49-855
C1U-H13,A-E	RB-20	GND-12	49-864	49-855
C1U-H18,A-D	RB-29	GND-12	49-285	49-855
C1U-H28	RB-28	GND-18	49-865	
C1U-H29	RB-29	GND-18	49-285	
C1U-H30,B	RB-29	GND-18	49-285	
C1U-H31,A-C	RB-29	GND-18	49-285	
C1U-H33	RB-29	GND-12	49-285	49-855
C1U-H36	RB-20	GND-12	49-864	49-855
C1U-H37	RB-20	GND-12	49-864	49-855
C1U-H39,A	RB-29	GND-18	49-285	
C1U-H40	RB-29	GND-12	49-285	49-855
C1U-H41	RB-29	GND-18	49-285	
C1U-H46,A	RB-82	GND-49		
C1U-H47	RB-29	GND-18	49-285	
C1U-H48,A	RB-29	GND-18	49-285	
C1U-H49	RB-82	GND-49		
C1U-H60,A-E	RB-29	GND-18	49-285	
C1U-H61,A	RB-20	GND-12	49-864	49-855
C1U-H62,A	RB-141	GND-77		
C1U-K10	RB-21	GND-18	49-865	
C1U-K10A	RB-27	GND-17	49-897	49-880
C1U-K11	RB-21	GND-18	49-865	
C1U-K12	RB-27	GND-17	49-897	49-880
C1U-K13	RB-63	GND-17		49-880
C1U-K14	RB-21	GND-18	49-865	
C1U-K15,A-B	RB-21	GND-18	49-865	
C1U-K16,A	RB-21	GND-18	49-865	
C1U-K17	RB-23	GND-12	49-283	49-855
C1U-K18,A-B	RB-63	GND-17		49-880
C1U-K19	RB-25	GND-17		49-880
C1U-K20,A-C	RB-26	GND-17	49-284	49-880
C1U-K21	RB-27	GND-17	49-897	49-880
C1U-K21A-B	RB-26	GND-17	49-284	49-880
C1U-K22,A	RB-27	GND-17	49-897	49-880
C1U-K23	RB-26	GND-17	49-284	49-880
C1U-K23A-B	RB-27	GND-17	49-897	49-880
C1U-K26	RB-21	GND-18	49-865	
C1U-K26A-B	RB-52	GND-18		
C1U-K27,A-D	RB-23	GND-12	49-283	49-855
C1U-K28,A	RB-48	GND-18		
C1U-K29,A	RB-21	GND-18	49-865	
C1U-K30,A	RB-27	GND-17	49-897	49-880
C1U-K31	RB-26	GND-17	49-284	49-880
C1U-K31A-B	RB-27	GND-17	49-897	49-880
C1U-K32,A	RB-21	GND-18	49-865	
C1U-K34,A	RB-26	GND-17	49-284	49-880
C1U-K35,A	RB-27	GND-17	49-897	49-880
C1U-K36,A	RB-48	GND-18		
C1U-K39,A-B	RB-62	GND-40		
C1U-K4	RB-21	GND-18	49-865	
C1U-K41,A-B	RB-62	GND-40		
C1U-K42,A-B	RB-59	GND-38	49-286	
C1U-K43,A-B	RB-59	GND-38	49-286	
C1U-K44,A-B	RB-59	GND-38	49-286	
C1U-K45	RB-27	GND-17	49-897	49-880
C1U-K46	RB-65	GND-38		
C1U-K47	RB-64	GND-41	49-439	
C1U-K51	RB-64	GND-41	49-439	
C1U-K52	RB-64	GND-41	49-439	
C1U-K53	RB-64	GND-41	49-439	
C1U-K53A-B	RB-121	GND-41		
C1U-K54,A	RB-71	GND-44	49-271	
C1U-K55	RB-64	GND-41	49-439	
C1U-K58	RB-64	GND-41	49-439	
C1U-K59	RB-64	GND-41	49-439	
C1U-K62	RB-64	GND-41	49-439	
C1U-K68	RB-104	GND-41		
C1U-K7,A	RB-21	GND-18	49-865	
C1U-K78	RB-125	GND-68		
C1U-K8,A	RB-21	GND-18	49-865	
C1U-K81,A-B	RB-71	GND-44	49-271	
C1U-K82	RB-71	GND-44	49-271	
C1U-K83	RB-136	GND-75		

OEM CARBURETOR			OREGON	
Model	Kit	Gaskets	Kit	Gaskets
Zama				
C1U-K9,A	RB-21	GND-18	49-865	
C1U-M16	RB-28	GND-18	49-865	
C1U-M20	RB-28	GND-18	49-865	
C1U-M21,A-C	RB-20	GND-12	49-864	49-855
C1U-M29,A-E	RB-48	GND-18		
C1U-M32,A-C	RB-28	GND-18	49-865	
C1U-M35A	RB-29	GND-12	49-285	49-855
C1U-M37,A	RB-48	GND-18		
C1U-M38	RB-28	GND-18	49-865	
C1U-M40	RB-28	GND-18	49-865	
C1U-M42	RB-28	GND-18	49-865	
C1U-P10,A	RB-29	GND-18	49-285	
C1U-P11,A-B	RB-29	GND-18	49-285	
C1U-P12,A	RB-29	GND-18	49-285	
C1U-P14,A	RB-29	GND-18	49-285	
C1U-P17	RB-98	GND-18		
C1U-P21,A-B	RB-98	GND-18		
C1U-P23	RB-98	GND-18		
C1U-P5	RB-29	GND-18	49-285	
C1U-P6,A	RB-29	GND-18	49-285	
C1U-P7	RB-29	GND-18	49-285	
C1U-SK11	RB-26	GND-17	49-284	49-880
C1U-SK12	RB-26	GND-17	49-284	49-880
C1U-SK13,A	RB-26	GND-17	49-284	49-880
C1U-SK14	RB-26	GND-17	49-284	49-880
C1U-SK17	RB-64	GND-41	49-439	
C1U-W10,B-C	RB-47	GND-18	49-272	
C1U-W12,A-B	RB-47	GND-18	49-272	
C1U-W13,A-B	RB-47	GND-18	49-272	
C1U-W16,B-C	RB-47	GND-18	49-272	
C1U-W17,A	RB-111	GND-49		
C1U-W18,A	RB-115	GND-12		49-855
C1U-W19	RB-117	GND-64		
C1U-W22	RB-47	GND-18	49-272	
C1U-W24	RB-115	GND-12		49-855
C1U-W32,A	RB-142	GND-78	49-275	
C1U-W4,A-E	RB-73	GND-12	49-908	49-855
C1U-W43,A-B	RB-156	GND-77		
C1U-W45	RB-156	GND-77		
C1U-W46	RB-47	GND-18	49-272	
C1U-W7A-B	RB-78	GND-17		49-880
C1U-W7C-D	RB-73	GND-18	49-908	
C2-20-01,A	RB-15	GND-08	49-836-0	49-860
C2-20-02,A	RB-15	GND-08	49-836-0	49-860
C2-L1,A	RB-15	GND-08	49-836-0	49-860
C2-M3A	RB-15	GND-08	49-836-0	49-860
C2S-H5,A	RB-16	GND-09		
C2S-H9	RB-17	GND-09		
C3-E8,A	RB-95	GND-54		
C3-E9,A	RB-95	GND-54		
C3-EL15,A	RB-95	GND-54		
C3-EL16,A	RB-95	GND-54		
C3-EL17,A-B	RB-122	GND-65		
C3-EL18,A-B	RB-122	GND-65		
C3-EL29,A-B	RB-133	GND-73		
C3-EL29C	RB-177	GND-73		
C3-EL32	RB-122	GND-65		
C3-EL42	RB-163	GND-94		
C3-EL43	RB-133	GND-73		
C3-EL43A	RB-177	GND-73		
C3-K5	RB-43	GND-19		
C3-S148	RB-167	GND-96		
C3-S149	RB-167	GND-96		
C3A-G1,A	RB-30	GND-20		
C3A-S19	RB-31	GND-21	49-899	49-893
C3A-S25	RB-31	GND-21	49-899	49-893
C3A-S26	RB-31	GND-21	49-899	49-893
C3A-S27,A-D	RB-31	GND-21	49-899	49-893
C3A-S31,A-E	RB-31	GND-21	49-899	49-893
C3A-S38,A-B	RB-31	GND-21	49-899	49-893
C3A-S39,A-B	RB-31	GND-21	49-899	49-893
C3A-S4A-C	RB-31	GND-21	49-899	49-893
C3A-S52	RB-31	GND-21	49-899	49-893
C3A-S65	RB-31	GND-21	49-899	49-893
C3M-DM11,A-B	RB-101	GND-63		
C3M-DM11C-D	RB-153	GND-86		
C3M-DM12,A	RB-101	GND-63		
C3M-DM12B	RB-153	GND-86		

OEM CARBURETOR			OREGON	
Model	Kit	Gaskets	Kit	Gaskets
Zama				
C3M-EL2A-C	RB-60	GND-24		
C3M-EL8,A-B	RB-60	GND-24		
C3M-FJ1,A	RB-35	GND-24		
C3M-FJ2,A	RB-35	GND-24		
C3M-FJ3,A-C	RB-35	GND-24		
C3M-FJ4	RB-35	GND-24		
C3M-FJ5,A	RB-35	GND-24		
C3M-K33,A-D	RB-53	GND-26		
C3M-K74	RB-116	GND-62		
C3M-K80	RB-116	GND-62		
C3M-S12,A-B	RB-36	GND-25	49-867	49-857
C3M-S20	RB-36	GND-25	49-867	49-857
C3M-S21	RB-36	GND-25	49-867	49-857
C3M-S22	RB-36	GND-25	49-867	49-857
C3M-S23	RB-36	GND-25	49-867	49-857
C3M-S24	RB-36	GND-25	49-867	49-857
C3M-S5,A-C	RB-37	GND-26		
C3M-S5D-G	RB-36	GND-25	49-867	49-857
G1L-E11		GND-35		49-924
G1L-E11,A	RB-41	GND-35	49-898	
G1L-E11A		GND-35		49-924
LA-S6,A	RB-42	GND-30	49-879	
LA-S7,A	RB-42	GND-30	49-879	
LA-S8,A	RB-42	GND-30	49-879	
LB-S9,A	RB-42	GND-30	49-879	
LE-H53	RB-86	GND-18		
LE-H54,A	RB-86	GND-49		
LE-H55	RB-94	GND-12		49-855
LE-H56	RB-94	GND-12		49-855
RB-FA1	RB-107	GND-52		
RB-FR2,A	RB-102	GND-52		
RB-FR3,A	RB-103	GND-52		
RB-FR4	RB-102	GND-52		
RB-JF1	RB-128	GND-52		
RB-K57,A-B	RB-81	GND-48		
RB-K60,A	RB-88	GND-52		
RB-K61,A	RB-88	GND-52		
RB-K63	RB-81	GND-48		
RB-K65,A	RB-112	GND-52		
RB-K66	RB-112	GND-52		
RB-K66A-B	RB-107	GND-52		
RB-K67	RB-112	GND-52		
RB-K67A-B	RB-107	GND-52		
RB-K70,A	RB-107	GND-52		
RB-K71	RB-107	GND-52		
RB-K72	RB-107	GND-52		
RB-K75	RB-123	GND-66		
RB-K84	RB-139	GND-66		
RB-K85	RB-123	GND-66		
RB-K86	RB-123	GND-66		
RB-K87	RB-123	GND-66		
RB-K88	RB-123	GND-66		
RB-K89	RB-139	GND-66		
RB-K90	RB-123	GND-66		
RB-K91	RB-123	GND-66		
RB-K92	RB-123	GND-66		
RB-K93	RB-123	GND-66		
RB-K94	RB-139	GND-66		
RB-P25	RB-128	GND-52		
RB-SK18,A	RB-107	GND-52		
RC1-M45	RB-135	GND-74		
RC1-M46	RB-135	GND-74		
RC2-M47	RB-135	GND-74		
RC2-M48	RB-135	GND-74		

C

Carburetor Kit Reference

OEM CARBURETOR			OREGON	
Model	Kit	Gaskets	Kit	Gaskets

OEM CARBURETOR			OREGON	
Model	Kit	Gaskets	Kit	Gaskets

OEM CARBURETOR			OREGON	
Model	Kit	Gaskets	Kit	Gaskets

C

Carburetor Kit Application Chart

OEM ENGINE/UNIT		WALBRO CARBURETOR			OREGON	
Model	Carb	№	Kit	Gaskets	Kit	Gaskets
Active						
BIG 4.3	W	WYK-60-1	K21-WYK	D21-WYK		
BIG 5.2	W	WYK-210-1	K21-WYK	D21-WYK		
BIG 5.2	W	WYK-60-1	K21-WYK	D21-WYK		
Freetime25	W	WYC-12	K10-WYC	D10-WYC		
INDY	W	WYK-89	K21-WYK	D13-WYK		
K 1	W	WT-234-1	K20-WAT	D10-WAT	49-831	49-812
K 2	W	WT-234-1	K20-WAT	D10-WAT	49-831	49-812
K 3	W	WT-234-1	K20-WAT	D10-WAT	49-831	49-812
Non Specified	W	WYK-212-1	K21-WYK	D21-WYK		
Non Specified	W	WYK-211-1	K21-WYK	D21-WYK		
Non Specified	W	WT-710-1	K20-WAT	D20-WAT	49-831	49-844
Unspecified	W	WYK-122-1	K21-WYK	D21-WYK		
Alpina	W					
56	T	HE-3A				49-800
66	T	HE-3A		DG-1HK		49-800
70	T	HS-158E	RK-23HS	DG-5HS	49-803	49-802
232	W	WT-115-1	K10-WAT	D10-WAT	49-816	49-812
238	W	WT-115	K10-WAT	D10-WAT	49-816	49-812
330	W	WA-210-1	K10-WAT	D10-WAT	49-816	49-812
330	W	WA-222-1	K10-WAT	D10-WAT	49-816	49-812
330	W	WA-53-1	K10-WAT	D10-WAT	49-816	49-812
360	W	WT-534-1	K20-WAT	D20-WAT	49-831	49-844
380	W	WA-210-1	K10-WAT	D10-WAT	49-816	49-812
380	W	WA-222-1	K10-WAT	D10-WAT	49-816	49-812
380	W	WA-54-1	K10-WAT	D10-WAT	49-816	49-812
390	W	WT-534-1	K20-WAT	D20-WAT	49-831	49-844
700	T	HE-6A		DG-1HK		49-800
800	T	HE-7A		DG-1HK		49-800
28 cc	W	WT-273B	K20-WAT	D20-WAT	49-831	49-844
32 cc	W	WT-207-1	K20-WAT	D20-WAT	49-831	49-844
32 cc	W	WT-273-1	K20-WAT	D20-WAT	49-831	49-844
40 cc	W	WT-305-1	K20-WAT	D20-WAT	49-831	49-844
40 cc	W	WT-549-1	K20-WAT	D20-WAT	49-831	49-844
48 cc	W	WT-549	K20-WAT	D20-WAT	49-831	49-844
48 cc	W	WT-305-1	K20-WAT	D20-WAT	49-831	49-844
A 432	W	WT-131-1	K10-WAT	D10-WAT	49-816	49-812
A 432	W	WT-272-1	K10-WAT	D10-WAT	49-816	49-812
A 438	W	WT-131-1	K10-WAT	D10-WAT	49-816	49-812
A 438	W	WT-272-1	K10-WAT	D10-WAT	49-816	49-812
Euro 45	W	WT-525-1	K20-WAT	D20-WAT	49-831	49-844
HT-55	W	WYJ-397-1	K20-WYJ	D20-WYJ	49-882	
P 34	W	WT-131-1	K10-WAT	D10-WAT	49-816	49-812
P 34	W	WT-272-1	K10-WAT	D10-WAT	49-816	49-812
P 360	W	WT-718-1	K20-WAT	D20-WAT	49-831	49-844
P 400	W	WT-429-1	K20-WAT	D10-WAT	49-831	49-812
P 400	W	WT-368-1	K20-WAT	D10-WAT	49-831	49-812
P 400	W	WT-443-1	K20-WAT	D10-WAT	49-831	49-812
P 400	W	WT-429-1	K20-WAT	D10-WAT	49-831	49-812
P 410	W	WT-718-1	K20-WAT	D20-WAT	49-831	49-844
P 450	W	WT-368-1	K20-WAT	D10-WAT	49-831	49-812
P 450	W	WT-429-1	K20-WAT	D10-WAT	49-831	49-812
P 450	W	WT-443-1	K20-WAT	D10-WAT	49-831	49-812
P-350	W	WT-731-1	K20-WAT	D20-WAT	49-831	49-844
P400	W	WT-717-1	K20-WAT	D20-WAT	49-831	49-844
P450	W	WT-717-1	K20-WAT	D20-WAT	49-831	49-844
P70	T	HS-158E	RK-23HS	DG-5HS	49-803	49-802
Prof 56	W	HDA-141-1	K20-HDA	D10-HDA	49-845	
STAR 22	W	WYJ-283A-1	K20-WYJ	D20-WYJ	49-882	
STAR 31	W	WYJ-283A	K20-WYJ	D20-WYJ	49-882	
STAR 31	W	WYJ-304-1	K20-WYJ	D20-WYJ	49-882	
STAR 36	W	WYJ-284A	K20-WYJ	D20-WYJ	49-882	
STAR 41	W	WYJ-284-1	K20-WYJ	D20-WYJ	49-882	
STAR 45	W	WYJ-300-1	K20-WYJ	D20-WYJ	49-882	
STAR 45	W	WYK-174-1	K21-WYK	D21-WYK		
STAR 45	W	WYJ-309-1	K20-WYJ	D20-WYJ	49-882	
STAR 55	W	WYJ-309	K20-WYJ	D20-WYJ	49-882	
STAR 55	W	WYJ-301-1	K20-WYJ	D20-WYJ	49-882	
STAR22	W	WYJ-400-1	K20-WYJ	D20-WYJ	49-882	
STAR22	W	WYJ-400-1	K20-WYJ	D20-WYJ	49-882	
STAR26	W	WYJ-400-1	K20-WYJ	D20-WYJ	49-882	
STAR26	W	WYJ-400-1	K20-WYJ	D20-WYJ	49-882	
STAR36	W	WYJ-317-1	K20-WYJ	D20-WYJ	49-882	
STAR45	W	WT-761-1	K20-WAT	D20-WAT	49-831	49-844
STAR45	W	WYK-213-1	K21-WYK	D21-WYK		
STAR55	W	WYK-213-1	K21-WYK	D21-WYK		
STAR55	W	WT-761-1	K20-WAT	D20-WAT	49-831	49-844
STAR55	W	WYK-174-1	K21-WYK	D21-WYK		
TS-60	W	WYJ-397-1	K20-WYJ	D20-WYJ	49-882	
Unspecified	W	WYJ-398-1	K20-WYJ	D20-WYJ	49-882	
VIP 21	W	WT-260-1	K20-WAT	D10-WAT	49-831	49-812

OEM ENGINE/UNIT		WALBRO CARBURETOR			OREGON	
Model	Carb	№	Kit	Gaskets	Kit	Gaskets
Active						
VIP 25	W	WT-260-1	K20-WAT	D10-WAT	49-831	49-812
VIP 25	W	WT-543-1	K20-WAT	D20-WAT	49-831	49-844
VIP 30	W	WT-543-1	K20-WAT	D20-WAT	49-831	49-844
VIP 30	W	WT-273-1	K20-WAT	D20-WAT	49-831	49-844
VIP 34	W	WT-273-1	K20-WAT	D20-WAT	49-831	49-844
VIP 34	W	WT-544-1	K20-WAT	D20-WAT	49-831	49-844
VIP 42	W	WT-544-1	K20-WAT	D20-WAT	49-831	49-844
VIP 52	W	WT-545-1	K20-WAT	D20-WAT	49-831	49-844
VIP52	W	WT-720-1	K20-WAT	D20-WAT	49-831	49-844
WS437	W	WT-727-1	K20-WAT	D20-WAT	49-831	49-844
WS480	W	WT-727-1	K20-WAT	D20-WAT	49-831	49-844
Atlas						
FB 60	W	WT-232-1	K10-WAT	D10-WAT	49-816	49-812
FB 60	W	WT-284-1	K10-WAT	D10-WAT	49-816	49-812
P 95	W	HDA-148-1	K20-HDA	D10-HDA	49-845	
Berema Breaker						
185cc	W	HDA-215-1	K20-HDA	D20-HDA	49-845	49-835
Blue Bird						
23	W	WT-101-1	K10-WAT	D10-WAT	49-816	49-812
27	W	WT-101-1	K10-WAT	D10-WAT	49-816	49-812
31	W	WT-101-1	K10-WAT	D10-WAT	49-816	49-812
38	W	WT-101-1	K10-WAT	D10-WAT	49-816	49-812
38 cc	W	WT-161-1	K10-WAT	D10-WAT	49-816	49-812
EBC 27 E	W	WZ-17-1	K10-WZ	D10-WZ	49-877	49-848
EBC 27 E	W	WZ-35-1	K10-WZ	D10-WZ	49-877	49-848
K 25	W	WT-364-1	K10-WAT	D10-WAT	49-816	49-812
K 25	W	WYK-22-1	K22-WYK	D22-WYK		
K 25	W	WYK-41-1	K20-WYK	D20-WYK		
K 25	W	WYK-57-1	K21-WYK	D21-WYK		
K 29	W	WYK-22-1	K22-WYK	D22-WYK		
K 29	W	WYK-57-1	K21-WYK	D21-WYK		
K 29	W	WYK-41-1	K20-WYK	D20-WYK		
K 29	W	WT-364-1	K10-WAT	D10-WAT	49-816	49-812
M 27	W	WT-364-1	K10-WAT	D10-WAT	49-816	49-812
M 34	W	WT-364-1	K10-WAT	D10-WAT	49-816	49-812
M 34	W	WT-432-1	K10-WAT	D10-WAT	49-816	49-812
M 41	W	WT-362-1	K10-WAT	D10-WAT	49-816	49-812
M 41	W	WT-397-1	K10-WAT	D10-WAT	49-816	49-812
M 47	W	WT-397-1	K10-WAT	D10-WAT	49-816	49-812
M 47	W	WT-362-1	K10-WAT	D10-WAT	49-816	49-812
M 54	W	WT-362-1	K10-WAT	D10-WAT	49-816	49-812
M 54	W	WT-397-1	K10-WAT	D10-WAT	49-816	49-812
N 39 E	W	WYK-27-1	K22-WYK	D22-WYK		
N 39 E	W	WYK-41-1	K20-WYK	D20-WYK		
N 39 E	W	WYK-42-1	K20-WYK	D20-WYK		
N 39 E	W	WYK-58-1	K21-WYK	D21-WYK		
N 39 E	W	WT-190-1	K10-WAT	D10-WAT	49-816	49-812
N 45	W	WYK-42-1	K20-WYK	D20-WYK		
N 45 E	W	WT-190-1	K10-WAT	D10-WAT	49-816	49-812
N 45 E	W	WYK-58-1	K21-WYK	D21-WYK		
N 45 E	W	WYK-58-1	K21-WYK	D21-WYK		
N 45 E	W	WT-143-1	K10-WAT	D10-WAT	49-816	49-812
N 52 E	W	WT-143-1	K10-WAT	D10-WAT	49-816	49-812
N 52 E	W	WT-190-1	K10-WAT	D10-WAT	49-816	49-812
N 52 E	W	WYK-42-1	K20-WYK	D20-WYK		
N 52 E	W	WYK-58-1	K21-WYK	D21-WYK		
N 52 E	W	WYK-27-1	K22-WYK	D22-WYK		
NBC 31	W	WZ-17-1	K10-WZ	D10-WZ	49-877	49-848
NBC 38 E	W	WZ-17-1	K10-WZ	D10-WZ	49-877	49-848
NPM 31E	W	WZ-17-1	K10-WZ	D10-WZ	49-877	49-848
P27	W	WT-741-1	K10-WAT	D10-WAT	49-816	49-812
P33	W	WT-741-1	K10-WAT	D10-WAT	49-816	49-812
P34	W	WT-741-1	K10-WAT	D10-WAT	49-816	49-812
SBC 23 E	W	WZ-17-1	K10-WZ	D10-WZ	49-877	49-848

CARB = Original OEM Carburetor

B = Bing
N = Nikki
T = Tillotson
TK = Teiki
W = Walbro
Z = Zama

*** No model information available

Carburetor Kit Application Chart

OEM ENGINE/UNIT		WALBRO CARBURETOR			OREGON	
Model	Carb	№	Kit	Gaskets	Kit	Gaskets
Blue Bird						
SBC 23 E	W	WZ-35-1	K10-WZ	D10-WZ	49-877	49-848
SEC 23 E	W	WZ-35-1	K10-WZ	D10-WZ	49-877	49-848
SEC 23 E	W	WZ-17-1	K10-WZ	D10-WZ	49-877	49-848
TBE 355	W	WT-143-1	K10-WAT	D10-WAT	49-816	49-812
Unspecified	W	WYJ-341-1	K20-WYJ	D20-WYJ	49-882	
Chrysler Outboard						
LMB Carburetor	W	LMB-215-1	K5-LMB	G1-LM		
LMB Carburetor	W	LMB-216-1	K3-LMB	G1-LM		
LMB Carburetor	W	LMB-229-1	K5-LMB	G1-LM		
Cifarelli						
680/688	W	WYK-184-1	K21-WYK	D21-WYK		
C 3	W	WT-33-1	K10-WAT	D10-WAT	49-816	49-812
M 88	W	WJ-17-1	K10-WJ	D10-WJ	49-873	49-843
M 88	W	WJ-17-1	K10-WJ	D10-WJ	49-873	49-843
M 88	W	WJ-37-1	K10-WJ	D10-WJ	49-873	49-843
M 88 BL	W	WJ-37-1	K10-WJ	D10-WJ	49-873	49-843
SC700	W	WYK-206-1	K21-WYK	D21-WYK		
SC800	W	WYK-229-1	K21-WYK	D21-WYK		
Cub Cadet (See Ryobi)						
Curtis Dyna Sprayer						
Insect Sprayer	W	WB-34-1	K10-WB	D10-WB	49-872	49-869
Insect Sprayer	W	WA-114-1	K10-WAT	D10-WAT	49-816	49-812
Insect Sprayer	W	WA-92-1	K10-WAT	D10-WAT	49-816	49-812
Insect Sprayer	W	WB-26-1				
Insect Sprayer	W	WT-104-1	K10-WAT	D10-WAT	49-816	49-812
Insect Sprayer	W	WT-105-1	K10-WAT	D10-WAT	49-816	49-812
Cushman Golf Cart	W					
222 Twin	W	WHG-44-1	K1-WHG	0		
Desa Chainsaw						
Mighty Mite 100	W	WA-53-1	K10-WAT	D10-WAT	49-816	49-812
Mighty Mite 200	W	WA-53-1	K10-WAT	D10-WAT	49-816	49-812
Mighty Mite 300	W	WA-53-1	K10-WAT	D10-WAT	49-816	49-812
Mighty Mite 400	W	WA-54-1	K10-WAT	D10-WAT	49-816	49-812
PL 4	W	SDC-33-1	K10-SDC	D10-SDC	49-834	49-810
Dolmar						
100	W	WT-506-1	K20-WAT	D10-WAT	49-831	49-812
100	W	WT-505-1	K20-WAT	D10-WAT	49-831	49-812
100	W	WT-174-1	K20-WAT	D10-WAT	49-831	49-812
100	W	WT-390-1	K20-WAT	D10-WAT	49-831	49-812
102	W	WT-505-1	K20-WAT	D10-WAT	49-831	49-812
102	W	WT-506-1	K20-WAT	D10-WAT	49-831	49-812
102	W	WT-174-1	K20-WAT	D10-WAT	49-831	49-812
102	W	WT-390-1	K20-WAT	D10-WAT	49-831	49-812
102	W	WT-52-1	K20-WAT	D10-WAT	49-831	49-812
103	W	WA-85-1	K10-WAT	D10-WAT	49-816	49-812
105	W	WA-85-1	K10-WAT	D10-WAT	49-816	49-812
108	W	WA-85-1	K10-WAT	D10-WAT	49-816	49-812
109	W	WT-374-1	K20-WAT	D10-WAT	49-831	49-812
109	W	WT-76-1	K20-WAT	D10-WAT	49-831	49-812
109	W	WT-465-1	K20-WAT	D10-WAT	49-831	49-812
110	T	HU-64D	RK-14HU	DG-3HU	49-805	49-804
110	W	WT-76-1	K20-WAT	D10-WAT	49-831	49-812
111	W	WT-46-1	K20-WAT	D10-WAT	49-831	49-812
111	W	WT-76-1	K20-WAT	D10-WAT	49-831	49-812
112	T	HK-37A		DG-1HK		49-800
115	T	HU-83E	RK-14HU	DG-3HU	49-805	49-804
115	W	WT-61-1	K20-WAT	D10-WAT	49-831	49-812
115	W	WT-76-1	K20-WAT	D10-WAT	49-831	49-812
115	W	WT-76-1	K20-WAT	D10-WAT	49-831	49-812
116	W	HDA-23-1	K20-HDA	D10-HDA	49-845	
117	T	HK-37A		DG-1HK		49-800

CARB = Original OEM Carburetor

B = Bing
N = Nikki
T = Tillotson
TK = Teiki
W = Walbro
Z = Zama

*** No model information available

OEM ENGINE/UNIT		WALBRO CARBURETOR			OREGON	
Model	Carb	№	Kit	Gaskets	Kit	Gaskets
Dolmar						
120	T	HS-236E	RK-23HS	DG-5HS	49-803	49-802
120	W	HDA-22-1	K20-HDA	D10-HDA	49-845	
166	W	WB-17-1	K10-WB	D10-WB	49-872	49-869
166	W	WB-25-1	K11-WB	D11-WB		49-871
340	W	WT-375-1	K20-WAT	D10-WAT	49-831	49-812
340	W	WT-466-1	K20-WAT	D10-WAT	49-831	49-812
340	W	WT-507-1	K20-WAT	D10-WAT	49-831	49-812
400	W	WT-507-1	K20-WAT	D10-WAT	49-831	49-812
400	W	WT-466-1	K20-WAT	D10-WAT	49-831	49-812
400	W	WT-375-1	K20-WAT	D10-WAT	49-831	49-812
166 - 158	W	WB-17-1	K10-WB	D10-WB	49-872	49-869
181 chain Saw	Z	C1Q-DM13	RB-119	GND-27		49-909
181 chain Saw	Z	C1Q-DM14	RB-119	GND-27		49-909
BC 250	W	WT-39-1	K20-WAT	D10-WAT	49-831	49-812
BC 250	W	WT-73-1	K20-WAT	D10-WAT	49-831	49-812
BC 330	W	WT-9-1	K20-WAT	D10-WAT	49-831	49-812
BC 400	W	WT-183-1	K20-WAT	D10-WAT	49-831	49-812
BC 400	W	WT-56-1	K20-WAT	D10-WAT	49-831	49-812
DCS230	W	WYL-215-1	K20-WYL	D11-WYL		
DCS230T	W	WYL-230-1	K20-WYL	D11-WYL		
Farmer	W	WT-387-1	K20-WAT	D10-WAT	49-831	49-812
FS 384	W	WT-225-1	K20-WAT	D10-WAT	49-831	49-812
FS 385	W	WT-225-1	K20-WAT	D10-WAT	49-831	49-812
LT 250	W	WT-39-1	K20-WAT	D10-WAT	49-831	49-812
LT 250	W	WT-73-1	K20-WAT	D10-WAT	49-831	49-812
MS-30	Z	C1U-DM4	RB-20	GND-12	49-864	49-851
PC6412	W	WJ-105-1	K14-WJ	D12-WJ		
PC-7314	W	WJ-105-1	K14-WJ	D12-WJ		
PowerCut	T	HS-239D	RK-23HS	DG-5HS	49-803	49-802
PS220TH	W	WYL-230-1	K20-WYL	D11-WYL		
PS-34 C.S. w/primer	Z	C1Q-DM6	RB-72	GND-35		
PS-34 chain Saw	Z	C1Q-DM9	RB-72	GND-35		
PS-34 chain Saw EPA	Z	C1Q-DM8	RB-72	GND-35		
PS-34 CS. w/o primer	Z	C1Q-DM7	RB-72	GND-35		
PS-340	Z	C1Q-DM1	RB-72	GND-35		
PS-34chainSaw	Z	C1Q-DM10	RB-72	GND-35		
PS-540	W	WT-76-1	K20-WAT	D10-WAT	49-831	49-812
PS6400	Z	C3M-DM11	RB-101	GND-63		
PS6400	Z	C3M-DM12	RB-101	GND-63		
PS7900	Z	C3M-DM11	RB-101	GND-63		
PS7900	Z	C3M-DM12	RB-101	GND-63		
Unspecified	W	WT-37-1	K10-WAT	D10-WAT	49-816	49-812
Vibramoter 55	W	WT-76-1	K20-WAT	D10-WAT	49-831	49-812
Dynamic						
23 cc	W	WT-511-1	K10-WAT	D10-WAT	49-816	49-812
23 cc	W	WT-524-1	K10-WAT	D10-WAT	49-816	49-812
Echo						
3100	W	WT-357-1	K10-WAT	D10-WAT	49-816	49-812
280E,EVLP	Z	C1S-K1	RB-13	GND-7		49-859
290E,EVLP	Z	C1S-K1	RB-13	GND-7		49-859
401 EVL	W	WA-96-1	K10-WAT	D10-WAT	49-816	49-812
AT 250	W	WY-57-1	K10-WY	D10-WY	49-875	49-839
AT-200G	Z	C1U-K15	RB-21	GND-18	49-822-0	
AT203G	Z	C1U-K53	RB-64	GND-41	49-900	
AT203G	Z	C1U-K59	RB-64	GND-41	49-900	
CG 24 E	W	WYJ-249-1	k20-WYJ	D20-WYJ	49-882	
CLS-5000	W	WYK-173-1	K21-WYK	D21-WYK		
CLS-5800	Z	C3M-K33	RB-53	GND-26		
CLS-580X	Z	C3M-K74	RB-116	GND-62		
CLSB 4600	W	WT-120-1	K10-WAT	D10-WAT	49-816	49-812
CS 1001	W	SDC-52-1	K10-SDC	D10-SDC	49-834	49-810
CS 1001 VL	W	SDC-52-1	K10-SDC	D10-SDC	49-834	49-810
CS 1001 VL	W	SDC-76-1	K10-SDC	D10-SDC	49-834	49-810
CS 1100 VL	W	SDC-84-1	K10-SDC	D10-SDC	49-834	49-810
CS 1160 VL	W	SDC-84-1	K10-SDC	D10-SDC	49-834	49-810
CS 221	W	WYL-8-1	K20-WYL	D11-WYL		
CS 2600	W	WT-584-1	K20-WAT	D20-WAT	49-831	49-844
CS 2600 T	W	WT-584-1	K20-WAT	D20-WAT	49-831	49-844
CS 2800	W	WYP-4A	K20-WYMP	D20-WYMP		
CS 281	W	WT-68-1	K10-WAT	D10-WAT	49-816	49-812
CS 281 EVL	W	WA-108-1	K10-WAT	D10-WAT	49-816	49-812
CS 282	W	WT-35-1	K10-WAT	D10-WAT	49-816	49-812
CS 3000	W	WT-248-1	K10-WAT	D10-WAT	49-816	49-812
CS 3000	W	WT-317-1	K10-WAT	D10-WAT	49-816	49-812
CS 3000	W	WT-402-1	K20-WAT	D10-WAT	49-831	49-812
CS 3000	W	WT-589-1	K20-WAT	D10-WAT	49-831	49-812
CS 301	W	WT-589-1	K20-WAT	D10-WAT	49-831	49-812

C

Carburetor Kit Application Chart

OEM ENGINE/UNIT		WALBRO CARBURETOR			OREGON	
Model	Carb	№	Kit	Gaskets	Kit	Gaskets
Dynamic						
CS 302 (RM-401)	W	WA-5-1	K10-WAT	D10-WAT	49-816	49-812
CS 302 S	W	WA-5-1	K10-WAT	D10-WAT	49-816	49-812
CS 304 VL	W	WA-33-1	K10-WAT	D10-WAT	49-816	49-812
CS 3050	W	WT-254-1	K10-WAT	D10-WAT	49-816	49-812
CS 3100	W	WT-381-1	K10-WAT	D10-WAT	49-816	49-812
CS 3100	W	WT-385-1	K10-WAT	D10-WAT	49-816	49-812
CS 315	W	WA-32-1	K10-WAT	D10-WAT	49-816	49-812
CS 315	W	WA-33-1	K10-WAT	D10-WAT	49-816	49-812
CS 340 EVL	W	WA-75-1	K10-WAT	D10-WAT	49-816	49-812
CS 3400	W	WT-271-1	K10-WAT	D10-WAT	49-816	49-812
CS 3400	W	WT-356-1	K10-WAT	D10-WAT	49-816	49-812
CS 3400	W	WT-381-1	K10-WAT	D10-WAT	49-816	49-812
CS 3400	W	WT-402-1	K20-WAT	D10-WAT	49-831	49-812
CS 3400	W	WT-385-1	K10-WAT	D10-WAT	49-816	49-812
CS 3400 T	W	WT-358-1	K10-WAT	D10-WAT	49-816	49-812
CS 3450	W	WT-261-1	K10-WAT	D10-WAT	49-816	49-812
CS 3450	W	WT-402-1	K20-WAT	D10-WAT	49-831	49-812
CS 351 VL	W	WA-25-1	K10-WAT	D10-WAT	49-816	49-812
CS 3600	W	WT-88-1	K10-WAT	D10-WAT	49-816	49-812
CS 361	W	WA-196-1	K10-WAT	D10-WAT	49-816	49-812
CS 361 EVL	W	WA-137-1	K10-WAT	D10-WAT	49-816	49-812
CS 362 EVL	W	WA-137-1	K10-WAT	D10-WAT	49-816	49-812
CS 3900	W	WT-118-1	K20-WAT	D10-WAT	49-831	49-812
CS 3900	W	WT-127-1	K20-WAT	D10-WAT	49-831	49-812
CS 400 EVL	W	WA-93-1	K10-WAT	D10-WAT	49-816	49-812
CS 4400	W	WT-416-1	K20-WAT	D10-WAT	49-831	49-812
CS 441	W	WA-133-1	K10-WAT	D10-WAT	49-816	49-812
CS 452 VL	W	WA-38-1	K10-WAT	D10-WAT	49-816	49-812
CS 500 EVL	W	HDA-3-1	K20-HDA	D10-HDA	49-845	
CS 500 EVLP	W	HDA-3-1	K20-HDA	D10-HDA	49-845	
CS 500 VL	W	HDA-3-1	K20-HDA	D10-HDA	49-845	
CS 500 VL	W	HDB-9-1	K10-HDB	D10-HDB	49-832	49-806
CS 500 VLP	W	HDA-3-1	K20-HDA	D10-HDA	49-845	
CS 500 VLP	W	HDB-9-1	K10-HDB	D10-HDB	49-832	49-806
CS 5000	W	HDA-82-1	K20-HDA	D10-HDA	49-845	
CS 5000	W	HDA-145-1	K12-HDA	D11-HDA		
CS 501 VL	W	HDB-3-1	K10-HDB	D10-HDB	49-832	49-806
CS 502 EVL	W	HDB-3-1	K10-HDB	D10-HDB	49-832	49-806
CS 510	W	WT-594-1	K20-WAT	D20-WAT	49-831	49-844
CS 510 EVL	W	HDA-20-1	K20-HDA	D10-HDA	49-845	
CS 510 EVL	W	HDA-20-1	K20-HDA	D10-HDA	49-845	
CS 5100	W	WT-575-1	K20-WAT	D20-WAT	49-831	49-844
CS 5500	W	HDA-53-1	K12-HDA	D11-HDA		
CS 551	W	HDA-14-1	K20-HDA	D10-HDA	49-845	
CS 60 S	W	WJ-22-1	K11-WJ	D11-WJ		
CS 601 TVL	W	HDA-7-1	K20-HDA	D10-HDA	49-845	
CS 601 TVLA	W	HDA-7-1	K20-HDA	D10-HDA	49-845	
CS 610 VL	W	SDC-70-1	K10-SDC	D10-SDC	49-834	49-810
CS 650 EVL	W	HDB-10-1	K10-HDB	D10-HDB	49-832	49-806
CS 650 EVL	W	HDB-11-1	K10-HDB	D10-HDB	49-832	49-806
CS 650 EVL	W	HDB-12-1	K10-HDB	D10-HDB	49-832	49-806
CS 651 EVL	W	HDB-11-1	K10-HDB	D10-HDB	49-832	49-806
CS 660 EVL	W	HDB-17-1	K10-HDB	D10-HDB	49-832	49-806
CS 660 EVL	W	HDB-17-1	K10-HDB	D10-HDB	49-832	49-806
CS 660 EVLP	W	HDB-17-1	K10-HDB	D10-HDB	49-832	49-806
CS 661 EVL	W	HDB-17-1	K10-HDB	D10-HDB	49-832	49-806
CS 6700	W	HDA-47-1	K20-HDA	D10-HDA	49-845	
CS 6700	W	HDA-76-1	K20-HDA	D10-HDA	49-845	
CS 6700	W	HDA-151-1	K12-HDA	D11-HDA		
CS 6701	W	HDA-177-1	K20-HDA	D11-HDA	49-845	
CS 6701	W	HDA-179-1	K22-HDA	D22-HDA	49-853	49-852
CS 6702	W	HDA-202-1	K12-HDA	D11-HDA		
CS 702 EVL	W	SDC-70-1	K10-SDC	D10-SDC	49-834	49-810
CS 702 VL	W	SDC-70-1	K10-SDC	D10-SDC	49-834	49-810
CS 750 EVL	W	SDC-70-1	K10-SDC	D10-SDC	49-834	49-810
CS 8000	W	HDA-45-1	K20-HDA	D10-HDA	49-845	
CS 8000	W	HDA-63-1	K20-HDA	D10-HDA	49-845	
CS 8000	W	HDA-153-1	K12-HDA	D11-HDA		
CS 803 EVL	W	SDC-70-1	K10-SDC	D10-SDC	49-834	49-810
CS 900 EVL	W	SDC-77-1	K10-SDC	D10-SDC	49-834	49-810
CS-1200	T	HS-266A	RK-23HS	DG-5HS	49-803	49-802
CS-2600	W	WT-711-1	K20-WAT	D20-WAT	49-831	49-844
CS-2600	W	WT-696-1	K20-WAT	D20-WAT	49-831	49-844
CS-2600	W	WT-687-1	K20-WAT	D20-WAT	49-831	49-844
CS-2600T	W	WT-687-1	K20-WAT	D20-WAT	49-831	49-844
CS-260W	W	WT-646-1	K24-WAT	D20-WAT		49-844
CS-260W	W	WT-646-1	K24-WAT	D20-WAT		49-844
CS2700	W	WT-646-1	K24-WAT	D20-WAT		49-844
CS2700	W	WT-646-1	K24-WAT	D20-WAT		49-844
CS-2700ES	W	WT-697-1	K20-WAT	D20-WAT	49-831	49-844

OEM ENGINE/UNIT		WALBRO CARBURETOR			OREGON	
Model	Carb	№	Kit	Gaskets	Kit	Gaskets
Dynamic						
CS-270W	W	WT-845-1	K20-WAT	D20-WAT	49-831	49-844
CS-280E/EP	Z	C1S-K1	RB-13	GND-7		49-859
CS-320T	W	WT-698-1	K20-WAT	D20-WAT	49-831	49-844
CS-332	Z	C1S-K6	RB-9	GND-5		49-895
CS-350T	W	WT-644-1	K24-WAT	D20-WAT		49-844
CS-350T	W	WT-622-1	K20-WAT	D20-WAT	49-831	49-844
CS-350T	W	WT-699-1	K20-WAT	D20-WAT	49-831	49-844
CS-350W	W	WT-721-1	K20-WAT	D20-WAT	49-831	49-844
CS-350W	W	WT-722-1	K20-WAT	D20-WAT	49-831	49-844
CS-350WES	W	WT-792-1	K10-WAT	D10-WAT	49-816	49-812
CS-370	W	WT-794-1	K10-WAT	D10-WAT	49-816	49-812
CS-4100	Z	C3-K5	RB-43	GND-19		
CS-4600	Z	C3-K5	RB-43	GND-19		
CS-5100	Z	C1Q-K79	RB-56	GND-57		
CS-60	T	HS-25A	RK-23HS	DG-5HS	49-803	49-802
CS-900	T	HS-215A	RK-23HS	DG-5HS	49-803	49-802
CSE3200	W	WT-723-1	K20-WAT	D20-WAT	49-831	49-844
CSE320T	W	WT-725-1	K20-WAT	D20-WAT	49-831	49-844
CSE3500	W	WT-724-1	K20-WAT	D20-WAT	49-831	49-844
CST 610 EVL	W	HDA-7-1	K20-HDA	D10-HDA	49-845	
CST 610 EVLP	W	HDA-7-1	K20-HDA	D10-HDA	49-845	
CSV 281	W	WYP-3-1	K20-WYMP	D20-WYMP		
CSV 3201	W	WT-568-1	K20-WAT	D20-WAT	49-831	49-844
CSV 3400	W	WT-504-1	K20-WAT	D10-WAT	49-831	49-812
CSV 3401	W	WT-568-1	K20-WAT	D20-WAT	49-831	49-844
CSV 3501	W	WT-567-1	K20-WAT	D20-WAT	49-831	49-844
CSV 361	W	WT-86-1	K10-WAT	D10-WAT	49-816	49-812
CSV 3701	W	WT-567-1	K20-WAT	D20-WAT	49-831	49-844
CSV 381	W	WT-119-1	K20-WAT	D10-WAT	49-831	49-812
CSV 3900	W	WT-306-1	K20-WAT	D10-WAT	49-831	49-812
CSV 3901	W	WT-567-1	K20-WAT	D20-WAT	49-831	49-844
CSV 391	W	HDA-28-1	K20-HDA	D10-HDA	49-845	
CSV 4000	W	WT-416-1	K20-WAT	D10-WAT	49-831	49-812
CSV 4401	W	WT-567-1	K20-WAT	D20-WAT	49-831	49-844
CSV 4500	W	HDA-28-1	K20-HDA	D10-HDA	49-845	
CSV 4500	W	HDA-28-1	K20-HDA	D10-HDA	49-845	
CSV 451	W	HDA-28-1	K20-HDA	D10-HDA	49-845	
CSV 453	W	HDA-82-1	K20-HDA	D10-HDA	49-845	
CVS 4000	W	WT-201-1	K20-WAT	D20-WAT	49-831	49-844
CVS 4000 H	W	WT-201-1	K20-WAT	D20-WAT	49-831	49-844
E 3 2200	W	WY-28-1	K10-WY	D10-WY	49-875	49-839
EB 260 T	W	WT-612-1	K20-WAT	D20-WAT	49-831	49-844
ES 201 AD	W	WA-59-1	K10-WAT	D10-WAT	49-816	49-812
ES 211	Z	C1U-K62	RB-64	GND-41	49-900	
ES-1000	Z	C1U-K26	RB-52	GND-18		
ES-2000	Z	C1U-K32	RB-21	GND-18	49-822-0	
ES210	Z	C1U-K78	RB-125	GND-68		
ES2100	Z	C1U-K68	RB-104	GND-41		
ES-2100	Z	C1U-K43	RB-59	GND-38	49-286	
ES-230	Z	RB-K67	RB-112	GND-52		
ES-230	Z	RB-K71	RB-107	GND-52		
ES-231	Z	RB-K61	RB-88	GND-52		
ES-231	Z	RB-K67	RB-112	GND-52		
ES-231	Z	RB-K71	RB-107	GND-52		
ES-2400	Z	C1U-K44	RB-59	GND-38	49-286	
ES255,	Z	RB-K85	RB-123	GND-66		
F 1 P	W	WA-46-1	K10-WAT	D10-WAT	49-816	49-812
F 2	W	WA-46-1	K10-WAT	D10-WAT	49-816	49-812
G 1	W	WA-46-1	K10-WAT	D10-WAT	49-816	49-812
G 1 A	W	WA-80-1	K10-WAT	D10-WAT	49-816	49-812
G 671	W	HDA-85-1	K20-HDA	D10-HDA	49-845	
G43L	W	WYK-191-1	K21-WYK	D21-WYK		
GE 200 V	W	WT-157-1	K10-WAT	D10-WAT	49-816	49-812
GET 650	W	HDA-69-1	K20-HDA	D10-HDA	49-845	
GT 1000	W	WA-168-1	K10-WAT	D10-WAT	49-816	49-812
GT 1100	W	WYL-1-1	K20-WYL	D11-WYL		
GT 1100	W	WYL-2-1	K20-WYL	D11-WYL		
GT 1100	W	WYL-10-1	K20-WYL	D11-WYL		
GT 160	W	WA-123-1	K10-WAT	D10-WAT	49-816	49-812
GT 160 A	W	WA-138-1	K10-WAT	D10-WAT	49-816	49-812

CARB = Original OEM Carburetor

B = Bing
N = Nikki
T = Tillotson
TK = Teiki
W = Walbro
Z = Zama

*** No model information available

C

Carburetor Kit Application Chart

OEM ENGINE/UNIT		WALBRO CARBURETOR			OREGON	
Model	Carb	№	Kit	Gaskets	Kit	Gaskets
Dynamic						
GT 200 B	W	WA-143-1	K10-WAT	D10-WAT	49-816	49-812
GT 2101	W	WYL-1-1	K20-WYL	D11-WYL		
GT 2200	W	WY-18-1	K10-WY	D10-WY	49-875	49-839
GT 2400	W	WT-424-1	K24-WAT	D22-WAT		
GT200	Z	C1U-K58	RB-64	GND-41	49-900	
GT200	Z	RB-K66	RB-112	GND-52		
GT2000	Z	C1U-K52	RB-64	GND-41	49-900	
GT-2000	Z	C1U-K29	RB-21	GND-18	49-822-0	
GT-2000	Z	C1U-K41	RB-62	GND-40		
GT2000SB	Z	C1U-K52	RB-64	GND-41	49-900	
GT201	Z	RB-K66	RB-112	GND-52		
GT2100	Z	C1U-K52	RB-64	GND-41	49-900	
GT-2100	Z	C1U-K4	RB-21	GND-18	49-822-0	
GT-2103	Z	C1U-K12	RB-27	GND-17	49-897	49-880
GT-2400	Z	C1U-K39	RB-62	GND-40		
GTB 1100	W	WYL-6-1	K20-WYL	D11-WYL		
GTB 2101	W	WYL-6-1	K20-WYL	D11-WYL		
GTL 140	W	WA-68-1	K10-WAT	D10-WAT	49-816	49-812
H 1	W	WA-81-1	K10-WAT	D10-WAT	49-816	49-812
H 1 AH	W	WA-100-1	K20-WAT	D20-WAT	49-831	49-844
H 1 AM	W	WA-100-1	K20-WAT	D20-WAT	49-831	49-844
H 1 AT	W	WA-100-1	K20-WAT	D20-WAT	49-831	49-844
HC 1001	W	WYL-11-1	K20-WYL	D11-WYL		
HC 1001	W	WYL-3-1	K20-WYL	D11-WYL		
HC 1001	W	WYL-7-1	K20-WYL	D11-WYL		
HC 1001	W	WYL-7-1	K20-WYL	D11-WYL		
HC 140	W	WA-89-1	K10-WAT	D10-WAT	49-816	49-812
HC 160	W	WA-89-1	K10-WAT	D10-WAT	49-816	49-812
HC 1600	Z	C1U-K47	RB-64	GND-41	49-900	
HC 200	W	WA-91-1	K10-WAT	D10-WAT	49-816	49-812
HC 210 E	W	WA-148-1	K10-WAT	D10-WAT	49-816	49-812
HC 2100	W	WT-168-1	K10-WAT	D10-WAT	49-816	49-812
HC 230	W	WYJ-258-1	K20-WYJ	D20-WYJ	49-882	
HC 260	W	WYJ-251-1	K20-WYJ	D20-WYJ	49-882	
HC 261	W	WYJ-251-1	K20-WYJ	D20-WYJ	49-882	
HC-1500	Z	C1U-K10	RB-21	GND-17	49-822-0	49-880
HC-1500	Z	C1U-K17	RB-23	GND-12	49-283	49-851
HC-1500	Z	C1U-K27	RB-23	GND-12	49-283	49-851
HC-1500	Z	C1U-K45	RB-27	GND-17	49-897	49-880
HC-1500	Z	C1U-K51	RB-64	GND-41	49-900	
HC160	Z	RB-K66	RB-112	GND-52		
HC-1600	Z	C1U-K7	RB-21	GND-18	49-822-0	
HC-1600	Z	C1U-K35	RB-27	GND-17	49-897	49-880
HC-1600	Z	C1U-K51	RB-64	GND-41	49-900	
HC180	Z	RB-K66	RB-112	GND-52		
HC200	Z	RB-K66	RB-112	GND-52		
HC-2000	Z	C1U-K18 A-B	RB-63	GND-17		49-880
HC-2000	Z	C1U-K35	RB-27	GND-17	49-897	49-880
HC-2000	Z	C1U-K45	RB-27	GND-17	49-897	49-880
HC-2000	Z	C1U-K51	RB-64	GND-41	49-900	
HC-2100	Z	C1U-K13	RB-63	GND-17		49-880
HC-2300	Z	C1U-K13	RB-63	GND-17		49-880
HC-2400	Z	C1U-K30	RB-27	GND-17	49-897	49-880
HC-2400	Z	C1U-K31	RB-26	GND-17	49-284	49-880
HC-2400	Z	C1U-K45	RB-27	GND-17	49-897	49-880
HC-2400	Z	C1U-K51	RB-64	GND-41	49-900	
HC-2410	Z	C1U-K30	RB-27	GND-17	49-897	49-880
HC-2410	Z	C1U-K31	RB-26	GND-17	49-284	49-880
HC-2410	Z	C1U-K51	RB-64	GND-41	49-900	
HCA 260	W	WYJ-259-1	K20-WYJ	D20-WYJ	49-882	
HCA 261	W	WYJ-276-1	K20-WYJ	D20-WYJ	49-882	
HCR-1500	Z	C1U-K83	RB-136	GND-75		
HT 200	W	WA-81-1	K10-WAT	D10-WAT	49-816	49-812
HTE60	W	WYL-165-1	K20-WYL	D11-WYL		
HTE75	W	WYL-165-1	K20-WYL	D11-WYL		
HTM 2	W	WYJ-27-1	K20-WYJ	D20-WYJ	49-882	
J/D 30S	Z	C1U-K21	RB-27	GND-17	49-897	49-880
J/D 38B	Z	C1U-K22	RB-27	GND-17	49-897	49-880
J/D21C	Z	C1U-K19	RB-25	GND-17		49-880
J/D21S	Z	C1U-K19	RB-25	GND-17		49-880
K 3	W	WA-45-1	K10-WAT	D10-WAT	49-816	49-812

CARB = Original OEM Carburetor

B = Bing
N = Nikki
T = Tillotson
TK = Teiki
W = Walbro
Z = Zama

*** No model information available

OEM ENGINE/UNIT		WALBRO CARBURETOR			OREGON	
Model	Carb	№	Kit	Gaskets	Kit	Gaskets
Dynamic						
KCJ CS-5100	Z	C1Q-K64	RB-56	GND-57		
KEH 202	W	WA-28-1	K10-WAT	D10-WAT	49-816	49-812
LE 25	W	WT-606-1	K20-WAT	D20-WAT	49-831	49-844
PAS-231	Z	RB-K63	RB-81	GND-48		
PB 200	W	WA-66-1	K10-WAT	D10-WAT	49-816	49-812
PB 210 E	W	WA-157-1	K10-WAT	D10-WAT	49-816	49-812
PB 210 E	W	WT-409-1	K20-WAT	D10-WAT	49-831	49-812
PB 2400	W	WT-314-1	K22-WAT	D22-WAT		
PB 2400	W	WT-417-1	K20-WAT	D10-WAT	49-831	49-812
PB 2400	W	WT-274-1	K24-WAT	D22-WAT		
PB 260 L	W	WYJ-257-1	K20-WYJ	D20-WYJ	49-882	
PB 260 LN	W	WYJ-257-1	K20-WYJ	D20-WYJ	49-882	
PB 300 E	W	WA-162-1	K10-WAT	D10-WAT	49-816	49-812
PB 400	W	WA-55-1	K10-WAT	D10-WAT	49-816	49-812
PB 400 E	W	WA-55-1	K10-WAT	D10-WAT	49-816	49-812
PB 400 E	W	WT-410-1	K20-WAT	D10-WAT	49-831	49-812
PB 4500	W	WA-191-306	K10-WAT	D10-WAT	49-816	49-812
PB 4500	W	WA-191-1	K10-WAT	D10-WAT	49-816	49-812
PB 4500	W	WYK-134-1	K21-WYK	D21-WYK		
PB 650	W	WYK-150-1	K21-WYK	D21-WYK		
PB-1000	Z	C1U-K11	RB-21	GND-18	49-822-0	
PB-1000	Z	C1U-K26	RB-52	GND-18		
PB-1010	Z	C1U-K11	RB-21	GND-18	49-822-0	
PB-1010	Z	C1U-K14	RB-21	GND-18	49-822-0	
PB-1010	Z	C1U-K26	RB-52	GND-18		
PB201	Z	C1U-K62	RB-64	GND-41	49-900	
PB206	W	WYK-190-1	K21-WYK	D21-WYK		
PB2100	Z	C1U-K68	RB-104	GND-41		
PB-2100	Z	C1U-K42	RB-59	GND-38	49-286	
PB-230	Z	RB-K72	RB-107	GND-52		
PB-231	Z	RB-K72	RB-107	GND-52		
PB411	W	WT-684-306	K26-WAT	D26-WAT		
PB-411	W	WT-684-1	K26-WAT	D26-WAT		
PB-413	Z	C1M-K77	RB-124	GND-67		
PB-4600	Z	C1M-K24	RB-44	GND-31	49-903	
PB-4600	Z	C1M-K24	RB-44	GND-31	49-903	
PB-4600	Z	C1M-K37	RB-61	GND-31	49-906	
PB6000	Z	C1M-K49	RB-44	GND-31	49-903	
PB-6000	Z	C1M-K25	RB-44	GND-31	49-903	
PB-6000	Z	C1M-K25	RB-44	GND-31	49-903	
PB-602	Z	C1M-K49	RB-44	GND-31	49-903	
PB-603	Z	C1M-K49	RB-44	GND-31	49-903	
PB-610	Z	C1M-K49	RB-44	GND-31	49-903	
PB-610	Z	C1M-K76	RB-44	GND-31	49-903	
PB-611	Z	C1M-K49	RB-44	GND-31	49-903	
PB-620	Z	C1M-K76	RB-44	GND-31	49-903	
PB-650R	W	WYK-180-1	K21-WYK	D21-WYK		
PB-750R	W	WYK-179-1	K21-WYK	D21-WYK		
PE-2000	Z	C1U-K29	RB-21	GND-18	49-822-0	
PE-231	Z	RB-K63	RB-81	GND-48		
PPSR-231	Z	RB-K57	RB-81	GND-48		
PPT 260	W	WYJ-259-1	K20-WYJ	D20-WYJ	49-882	
PPT-231	Z	RB-K57	RB-81	GND-48		
PS200	Z	C1U-K78	RB-125	GND-68		
PV 230LN	Z	RB-K60	RB-88	GND-52		
PV 231LN	Z	RB-K60	RB-88	GND-52		
PV-230LN	Z	RB-K65	RB-112	GND-52		
PV-231LN	Z	RB-K65	RB-112	GND-52		
RM 4000	W	WYK-134-1	K21-WYK	D21-WYK		
RM 5000	W	WYK-158-1	K21-WYK	D21-WYK		
RMA 253	W	WZ-44-1	K10-WZ	D10-WZ	49-877	49-848
RMAHB 212	W	WYK-8-1	K20-WYK	D20-WYK		
RMHB 212	W	WYK-8-1	K20-WYK	D20-WYK		
RS 202	W	WA-21-1	K10-WAT	D10-WAT	49-816	49-812
S 2 AP1	W	WA-59-1	K10-WAT	D10-WAT	49-816	49-812
S 2 AP2	W	WA-59-1	K10-WAT	D10-WAT	49-816	49-812
SHC 260	W	WYJ-259-1	K20-WYJ	D20-WYJ	49-882	
SHC 261	W	WYJ-276-1	K20-WYJ	D20-WYJ	49-882	
SHPA 703	W	WYK-5-1	K20-WYK	D20-WYK		
SHPE 703	W	WYL-4-1	K20-WYL	D11-WYL		
SHR-040	Z	C1U-K8	RB-21	GND-18	49-822-0	
SHR2100	Z	C1U-K52	RB-64	GND-41	49-900	
SHR2100	Z	C1U-K58	RB-64	GND-41	49-900	
SHR-2100	Z	C1U-K34	RB-26	GND-17	49-284	49-880
SHRE 041	W	WYL-4-1	K20-WYL	D11-WYL		
SHRE 060	W	WYL-4-1	K20-WYL	D11-WYL		
SMR2100	Z	C1U-K58	RB-64	GND-41	49-900	
SMR-2510	Z	C1U-K20	RB-26	GND-17	49-284	49-880
SRA 253 D	W	WZ-44-1	K10-WZ	D10-WZ	49-877	49-848

C

Carburetor Kit Application Chart

OEM ENGINE/UNIT		WALBRO CARBURETOR			OREGON	
Model	Carb	№	Kit	Gaskets	Kit	Gaskets
Dynamic						
SRE 240	W	WYK-163-1	K21-WYK	D21-WYK		
SRE 242	W	WYK-163-1	K21-WYK	D21-WYK		
SRM 140 DA	W	WA-46-1	K10-WAT	D10-WAT	49-816	49-812
SRM 1500	Z	C1U-K9	RB-21	GND-18	49-822-0	
SRM 1501	Z	C1U-K9	RB-21	GND-18	49-822-0	
SRM 160 M	W	WA-161-1	K10-WAT	D10-WAT	49-816	49-812
SRM 160 M	W	WZ-23-1	K10-WZ	D10-WZ	49-877	49-848
SRM 190	W	WA-132-1	K10-WAT	D10-WAT	49-816	49-812
SRM 200 BE	W	WA-143-1	K10-WAT	D10-WAT	49-816	49-812
SRM 200 DA	W	WA-59-1	K10-WAT	D10-WAT	49-816	49-812
SRM 200 DB	W	WA-59-1	K10-WAT	D10-WAT	49-816	49-812
SRM 2000	W	WY-28-1	K10-WY	D10-WY	49-875	49-839
SRM 2000	W	WY-18-1	K10-WY	D10-WY	49-875	49-839
SRM 2010 M	W	WZ-45-1	K10-WZ	D10-WZ	49-877	49-848
SRM 202	W	WA-21-1	K10-WAT	D10-WAT	49-816	49-812
SRM 204 DE	W	WA-50-1	K10-WAT	D10-WAT	49-816	49-812
SRM 205	W	WA-81-1	K10-WAT	D10-WAT	49-816	49-812
SRM 207 DE	W	WA-107-1	K10-WAT	D10-WAT	49-816	49-812
SRM 209 PS	W	WZ-24-1	K10-WZ	D10-WZ	49-877	49-848
SRM 210 AE	W	WA-143-1	K10-WAT	D10-WAT	49-816	49-812
SRM 2200	W	WY-18-1	K10-WY	D10-WY	49-875	49-839
SRM 230	W	WYK-70-1	K21-WYK	D21-WYK		
SRM 2300	Z	C1U-K9	RB-21	GND-18	49-822-0	
SRM 2400	W	WYJ-220-1	K20-WYJ	D20-WYL	49-882	
SRM 250 E	W	WA-163-1	K10-WAT	D10-WAT	49-816	49-812
SRM 2500	W	WY-20-1	K10-WY	D10-WY	49-875	49-839
SRM 251 PS	W	WZ-25-1	K10-WZ	D10-WZ	49-877	49-848
SRM 260	W	WYJ-250-1	K20-WYJ	D20-WYJ	49-882	
SRM 260	W	WYK-70-1	K21-WYK	D21-WYK		
SRM 260	W	WYJ-315-1	K20-WYJ	D20-WYJ	49-882	
SRM 2601	W	WYJ-192-1	K20-WYJ	D20-WYJ	49-882	
SRM 2601	W	WYJ-192-1	K20-WYJ	D20-WYJ	49-882	
SRM 260L	W	WYK-186-1	K13-WYK	D13-WYK		
SRM 261	W	WYJ-315-1	K20-WYJ	D20-WYJ	49-882	
SRM 261L	W	WYK-186-1	K13-WYK	D13-WYK		
SRM 300	W	WA-87-1	K10-WAT	D10-WAT	49-816	49-812
SRM 300 AE	W	WA-141-1	K10-WAT	D10-WAT	49-816	49-812
SRM 3000	W	WY-21-1	K10-WY	D10-WY	49-875	49-839
SRM 3010	W	WY-21-1	K10-WY	D10-WY	49-875	49-839
SRM 302 ADX	W	WA-7-1	K10-WAT	D10-WAT	49-816	49-812
SRM 302 BDX	W	WA-131-1	K10-WAT	D10-WAT	49-816	49-812
SRM 310	W	WA-175-1	K10-WAT	D10-WAT	49-816	49-812
SRM 3100	W	WT-344-1	K22-WAT	D22-WAT		
SRM 3100	W	WT-418-1	K20-WAT	D10-WAT	49-831	49-812
SRM 3100	W	WT-333-1	K20-WAT	D20-WAT	49-831	49-844
SRM 311	W	WYJ-275-1	K20-WYJ	D20-WYJ	49-882	
SRM 311	W	WYK-189-306	K21-WYK	D21-WYK		
SRM 311	W	WYK-189-1	K21-WYK	D21-WYK		
SRM 3400	W	WT-418-1	K20-WAT	D10-WAT	49-831	49-812
SRM 3400	W	WT-333-1	K20-WAT	D20-WAT	49-831	49-844
SRM 3400	W	WT-344-1	K22-WAT	D22-WAT		
SRM 3800	W	WT-297-1	K22-WAT	D22-WAT		
SRM 3800	W	WT-74-1	K10-WAT	D10-WAT	49-816	49-812
SRM 3800	W	WT-415-1	K20-WAT	D10-WAT	49-831	49-812
SRM 400	W	WYK-152-1	K21-WYK	D21-WYK		
SRM 400 AE	W	WA-142-1	K10-WAT	D10-WAT	49-816	49-812
SRM 4000	W	WYK-134-1	K21-WYK	D21-WYK		
SRM 400AE	W	WA-142-1	K10-WAT	D10-WAT	49-816	49-812
SRM 402 DE	W	WA-106-1	K10-WAT	D10-WAT	49-816	49-812
SRM 4600	W	WT-77-1	K10-WAT	D10-WAT	49-816	49-812
SRM 5000	W	WYK-158-1	K21-WYK	D21-WYK		
SRM 501	W	WA-39-1	K10-WAT	D10-WAT	49-816	49-812
SRM200	Z	RB-K66	RB-112	GND-52		
SRM201	Z	RB-K66	RB-112	GND-52		
SRM2015	Z	C1U-K53	RB-64	GND-41	49-900	
SRM2100	Z	C1U-K52	RB-64	GND-41	49-900	
SRM-2100	Z	C1U-K16	RB-21	GND-18	49-822-0	
SRM-2100	Z	C1U-K41	RB-62	GND-40		
SRM-2110	Z	C1U-K16	RB-21	GND-18	49-822-0	
SRM230	Z	RB-K66	RB-112	GND-52		
SRM230	Z	RB-K70	RB-107	GND-52		
SRM230	Z	RB-K70	RB-107	GND-52		
SRM230	Z	RB-K75	RB-123	GND-66		
SRM-2301	Z	C1U-K12	RB-27	GND-17	49-897	49-880
SRM2305	Z	C1U-K53	RB-64	GND-41	49-900	
SRM231	Z	RB-K66	RB-112	GND-52		
SRM-2310	Z	C1U-K12	RB-27	GND-17	49-897	49-880
SRM-2400	Z	C1U-K39	RB-62	GND-40		
SRM2455	Z	C1U-K53	RB-64	GND-41	49-900	
SRM-2501	Z	C1U-K20	RB-26	GND-17	49-888-0	49-880

OEM ENGINE/UNIT		WALBRO CARBURETOR			OREGON	
Model	Carb	№	Kit	Gaskets	Kit	Gaskets
Dynamic						
SRM-2501S	Z	C1U-K20	RB-26	GND-17	49-888-0	49-880
SRM-251	Z	C1U-K81	RB-71	GND-44		
SRM255	Z	RB-K84	RB-139	GND-66		
SRM2600	Z	C1U-K36	RB-48	GND-18		
SRM-3000	Z	C1U-K21	RB-27	GND-17	49-897	49-880
SRM-330	W	WYJ-312-1	K20-WYJ	D20-WYJ	49-882	
SRM-3500ES	W	WYJ-373-1	K20-WYJ	D20-WYJ	49-882	
SRM-3550	Z	C1U-K30	RB-27	GND-17	49-897	49-880
SRM3800	Z	C1U-K22	RB-27	GND-17	49-897	49-880
SRM-4300	Z	C1Q-K73	RB-113	GND-61		
SRS-2100	Z	C1U-K16	RB-21	GND-18	49-822-0	
SV 3	W	WA-51-1	K10-WAT	D10-WAT	49-816	49-812
SV-4/B	Z	C1U-K27	RB-23	GND-12	49-283	49-851
SV-4/B	Z	C1U-K27	RB-23	GND-12	49-283	49-851
SV-4/E,B	Z	C1U-K46	RB-65	GND-38		
SV-4/E,B	Z	C1U-K54	RB-71	GND-44		
TC2100	Z	C1U-K54	RB-71	GND-44		
TT-21A	Z	C1U-K16	RB-21	GND-18	49-822-0	
Unspecified	W	WYL-180-1	K20-WYL	D11-WYL		
WP1000	Z	C1U-K55	RB-64	GND-41	49-900	
WP-1000	Z	C1U-K28	RB-48	GND-18		
Emab-Electrolux						
33	W	WT-79-1	K20-WAT	D10-WAT	49-831	49-812
33	W	WT-98-1	K20-WAT	D10-WAT	49-831	49-812
360	W	WT-67-1	K20-WAT	D10-WAT	49-831	49-812
360	W	WT-79-1	K20-WAT	D10-WAT	49-831	49-812
360	W	WT-98-1	K20-WAT	D10-WAT	49-831	49-812
370	W	WT-79-1	K20-WAT	D10-WAT	49-831	49-812
370	W	WT-98-1	K20-WAT	D10-WAT	49-831	49-812
370	W	WT-67-1	K20-WAT	D10-WAT	49-831	49-812
410	W	HDA-6-1	K20-HDA	D10-HDA	49-845	
420	W	HDA-6-1	K20-HDA	D10-HDA	49-845	
435	W	HDA-6-1	K20-HDA	D10-HDA	49-845	
440	W	HDA-68-1	K20-HDA	D10-HDA	49-845	
450	W	HDA-3-1	K20-HDA	D10-HDA	49-845	
450	W	HDA-40-1	K20-HDA	D10-HDA	49-845	
490	W	WA-121-1	K10-WAT	D10-WAT	49-816	49-812
490	W	WA-158-1	K10-WAT	D10-WAT	49-816	49-812
510	W	HDA-3-1	K20-HDA	D10-HDA	49-845	
520	W	HDA-3-1	K20-HDA	D10-HDA	49-845	
525	W	HDA-3-1	K20-HDA	D10-HDA	49-845	
535	W	HDA-6-1	K20-HDA	D10-HDA	49-845	
949	W	WA-158-1	K10-WAT	D10-WAT	49-816	49-812
1073	W	WA-22-1	K10-WAT	D10-WAT	49-816	49-812
1074	W	WA-22-1	K10-WAT	D10-WAT	49-816	49-812
2051	W	HDA-68-1	K20-HDA	D10-HDA	49-845	
2077	W	WJ-77-1	K13-WJ	D10-WJ		49-843
225 R	W	WT-406-1	K10-WAT	D10-WAT	49-816	49-812
32 cc	W	WT-597-1	K10-WAT	D10-WAT	49-816	49-812
34 cc	W	WT-13-1	K20-WAT	D10-WAT	49-831	49-812
50 cc	W	WA-144-1	K10-WAT	D10-WAT	49-816	49-812
A 55	W	WJ-1-1	K10-WJ	D10-WJ	49-873	49-843
A 55	W	WS-10-1	K10-WS	D10-WS		49-814
CSI	W	WT-599-1	K20-WAT	D20-WAT	49-831	49-844
F 1610	W	WA-8-1	K10-WAT	D10-WAT	49-816	49-812
F 1616	W	WA-8-1	K10-WAT	D10-WAT	49-816	49-812
F 55	W	WJ-1-1	K10-WJ	D10-WJ	49-873	49-843
F 55	W	WS-10-1	K10-WS	D10-WS		49-814
F 65	W	WJ-1-1	K10-WJ	D10-WJ	49-873	49-843
F 65	W	WS-10-1	K10-WS	D10-WS		49-814
Frontier Mark VI	W	WA-58-1	K10-WAT	D10-WAT	49-816	49-812
GTI	W	WT-598-1	K20-WAT	K10-WAT	49-831	
H 225 R	W	WT-421-1	K10-WAT	D10-WAT	49-816	49-812
K 500	W	WT-34-1	K20-WAT	D10-WAT	49-831	49-812
K 540	W	WT-353-1	K20-WAT	D10-WAT	49-831	49-812
LP 5	W	WA-27-1	K10-WAT	D10-WAT	49-816	49-812
LT Series	W	MA-42-1	XXX	XXXXX		
Miltimot 100	W	SDC-79-1	K10-SDC	D10-SDC	49-834	49-810

CARB = Original OEM Carburetor

B = Bing
N = Nikki
T = Tillotson
TK = Teiki
W = Walbro
Z = Zama

*** No model information available

C

Carburetor Kit Application Chart

OEM ENGINE/UNIT		WALBRO CARBURETOR			OREGON	
Model	Carb	№	Kit	Gaskets	Kit	Gaskets
Emab-Electrolux						
P 20	W	WA-22-1	K10-WAT	D10-WAT	49-816	49-812
P 25	W	WA-22-1	K10-WAT	D10-WAT	49-816	49-812
P 400	W	WT-17-1	K20-WAT	D10-WAT	49-831	49-812
P 400	W	WT-8-1	K20-WAT	D10-WAT	49-831	49-812
P 400	W	WT-99-1	K20-WAT	D10-WAT	49-831	49-812
P 41	W	SDC-53-1	K10-SDC	D10-SDC	49-834	49-810
P 42	W	SDC-53-1	K10-SDC	D10-SDC	49-834	49-810
P 42	W	SDC-80-1	K10-SDC	D10-SDC	49-834	49-810
P 42	W	WJ-20-1	K10-WJ	D10-WJ	49-873	49-843
P 42	W	WJ-9-1	K10-WJ	D10-WJ	49-873	49-843
P 42 T	W	WJ-13-1	K10-WJ	D10-WJ	49-873	49-843
P 42 T	W	WJ-21-1	K10-WJ	D10-WJ	49-873	49-843
P 442	W	WT-8-1	K20-WAT	D10-WAT	49-831	49-812
P 50	W	SDC-53-1	K10-SDC	D10-SDC	49-834	49-810
P 500	W	WA-82-1	K10-WAT	D10-WAT	49-816	49-812
P 5000	W	WA-158-1	K10-WAT	D10-WAT	49-816	49-812
P 5000	W	WA-82-1	K10-WAT	D10-WAT	49-816	49-812
P 51	W	SDC-53-1	K10-SDC	D10-SDC	49-834	49-810
P 52	W	SDC-53-1	K10-SDC	D10-SDC	49-834	49-810
P 52	W	SDC-80-1	K10-SDC	D10-SDC	49-834	49-810
P 52	W	WJ-20-1	K10-WJ	D10-WJ	49-873	49-843
P 52	W	WJ-9-1	K10-WJ	D10-WJ	49-873	49-843
P 52 T	W	WJ-13-1	K10-WJ	D10-WJ	49-873	49-843
P 52 T	W	WJ-21-1	K10-WJ	D10-WJ	49-873	49-843
P 55	W	WJ-1-1	K10-WJ	D10-WJ	49-873	49-843
P 55	W	WS-18-1	K10-WS	D10-WS		49-814
P 550	W	WJ-7-1	K10-WJ	D10-WJ	49-873	49-843
P 5500	W	WT-109-1	K20-WAT	D10-WAT	49-831	49-812
P 61	W	SDC-80-1	K10-SDC	D10-SDC	49-834	49-810
P 62	W	SDC-53-1	K10-SDC	D10-SDC	49-834	49-810
P 62	W	SDC-80-1	K10-SDC	D10-SDC	49-834	49-810
P 62	W	WJ-20-1	K10-WJ	D10-WJ	49-873	49-843
P 62	W	WJ-9-1	K10-WJ	D10-WJ	49-873	49-843
P 62 T	W	WJ-13-1	K10-WJ	D10-WJ	49-873	49-843
P 62 T	W	WJ-21-1	K10-WJ	D10-WJ	49-873	49-843
P 65	W	WJ-1-1	K10-WJ	D10-WJ	49-873	49-843
P 650	W	WJ-7-1	K10-WJ	D10-WJ	49-873	49-843
P 70	W	WS-18-1	K10-WS	D10-WS		49-814
P 7000	W	WJ-1-1	K10-WJ	D10-WJ	49-873	49-843
P 7000	W	WJ-7-1	K10-WJ	D10-WJ	49-873	49-843
P 7000	W	WS-18-1	K10-WS	D10-WS		49-814
P 7700	W	WJ-28-1	K10-WJ	D10-WJ	49-873	49-843
R 39	W	WT-17-1	K20-WAT	D10-WAT	49-831	49-812
R 40	W	WT-17-1	K20-WAT	D10-WAT	49-831	49-812
RS 51	W	HDA-86-1	K20-HDA	D10-HDA	49-845	
Efco/Emak /Olympk						
49	W	WJ-8-1	K10-WJ	D10-WJ	49-873	49-843
53	W	WJ-8-1	K10-WJ	D10-WJ	49-873	49-843
59	W	WJ-8-1	K10-WJ	D10-WJ	49-873	49-843
61	W	WJ-8-1	K10-WJ	D10-WJ	49-873	49-843
66	W	WJ-8-1	K10-WJ	D10-WJ	49-873	49-843
234	T	HU-36B	RK-14HU	DG-3HU	49-805	49-804
234	W	WA-73-1	K10-WAT	D10-WAT	49-816	49-812
240	W	WA-73-1	K10-WAT	D10-WAT	49-816	49-812
251	T	HS-128B	RK-23HS	DG-5HS	49-803	49-802
261	T	HS-128B	RK-23HS	DG-5HS	49-803	49-802
284	W	WJ-30-1	K11-WJ	D11-WJ		
284	W	WJ-55-1	K11-WJ	D11-WJ		
335	T	HU-66A	RK-14HU	DG-3HU	49-805	49-804
340	T	HU-36B	RK-14HU	DG-3HU	49-805	49-804
340	W	WA-203-1	K10-WAT	D10-WAT	49-816	49-812
481	W	WJ-30-1	K11-WJ	D11-WJ		
481	W	WJ-55-1	K11-WJ	D11-WJ		
482	W	WJ-30-1	K11-WJ	D11-WJ		
482	W	WJ-55-1	K11-WJ	D11-WJ		
542	T	HU-70A	RK-14HU	DG-3HU	49-805	49-804
727	W	WT-442-1	K20-WAT	D20-WAT	49-831	49-844
727	W	WT-175-1	K10-WAT	D10-WAT	49-816	49-812
733	W	WT-175-1	K10-WAT	D10-WAT	49-816	49-812

CARB = Original OEM Carburetor

B = Bing
N = Nikki
T = Tillotson
TK = Teiki
W = Walbro
Z = Zama

*** No model information available

OEM ENGINE/UNIT		WALBRO CARBURETOR			OREGON	
Model	Carb	№	Kit	Gaskets	Kit	Gaskets
Efco/Emak /Olympk						
733	W	WT-442-1	K20-WAT	D20-WAT	49-831	49-844
740	W	WT-442-1	K20-WAT	D20-WAT	49-831	49-844
740	W	WT-241-1	K20-WAT	D20-WAT	49-831	49-844
931	W	WT-477-1	K10-WAT	D10-WAT	49-816	49-812
931	W	WT-607-1	K20-WAT	D20-WAT	49-831	49-844
935	W	WT-495-1	K10-WAT	D10-WAT	49-816	49-812
935	W	WT-302-1	K10-WAT	D10-WAT	49-816	49-812
936	W	WT-562-1	K20-WAT	D20-WAT	49-831	49-844
936	W	WT-536-1	K20-WAT	D10-WAT	49-831	49-812
940	T	HU-65A	RK-14HU	DG-3HU	49-805	49-804
940	W	WT-535-1	K20-WAT	D20-WAT	49-831	49-844
940	W	WT-561-1	K20-WAT	D20-WAT	49-831	49-844
941	W	WT-494-1	K20-WAT	D10-WAT	49-831	49-812
942	W	WT-162-1	K20-WAT	D10-WAT	49-831	49-812
944	W	HDA-205-1	K22-HDA	D22-HDA	49-853	49-852
945	W	HDA-30-1	K20-HDA	D10-HDA	49-845	
946	W	WT-162-1	K20-WAT	D10-WAT	49-831	49-812
947	Z	C3-E8	RB-95	GND-54		49-874
949	W	WT-162-1	K20-WAT	D10-WAT	49-831	49-812
950	W	HDA-30-1	K20-HDA	D10-HDA	49-845	
951	W	WT-162-1	K20-WAT	D10-WAT	49-831	49-812
951	W	WT-494-1	K20-WAT	D10-WAT	49-831	49-812
952	Z	C3-E8	RB-95	GND-54		49-874
952	W	HDA-205-1	K22-HDA	D22-HDA	49-853	49-852
956	W	HDA-146-1	K20-HDA	D10-HDA	49-845	
956	W	HDA-160-1	K22-HDA	D22-HDA	49-853	49-852
956	W	HDA-192-1	K22-HDA	D22-HDA	49-853	49-852
962	W	HDA-146-1	K20-HDA	D10-HDA	49-845	
962	W	HDA-160-1	K22-HDA	D22-HDA	49-853	49-852
970	W	WJ-72-1	K12-WJ	D11-WJ		
970	W	WJ-44-1	K12-WJ	D10-WJ		49-843
980	W	WJ-73-1	K12-WJ	D11-WJ		
980	W	WJ-63-1	K12-WJ	D11-WJ		
981	W	WJ-89-1	K13-WJ	D13-WJ		
8000	W	WT-442-1	K20-WAT	D20-WAT	49-831	49-844
8260	W	WYJ-157A	K20-WYJ	D20-WYJ	49-882	
8350	W	WT-460-1	K20-WAT	D20-WAT	49-831	49-844
8350	W	WT-442-1	K20-WAT	D20-WAT	49-831	49-844
8400	W	WT-460-1	K20-WAT	D20-WAT	49-831	49-844
8400	W	WT-442-1	K20-WAT	D20-WAT	49-831	49-844
8460	W	WYK-143-1	K21-WYK	D21-WYK		
8460	W	WYK-144-1	K21-WYK	D21-WYK		
8460	W	WYK-103-1	K21-WYK	D21-WYK		
8460	W	WYK-104-1	K21-WYK	D21-WYK		
8460	W	WYK-125-1	K13-WYK	D21-WYK		
8530	W	WYK-125-1	K13-WYK	D21-WYK		
8530	W	WYK-104-1	K21-WYK	D21-WYK		
8530	W	WYK-103-1	K21-WYK	D21-WYK		
8530	W	WYK-144-1	K21-WYK	D21-WYK		
8530	W	WYK-143-1	K21-WYK	D21-WYK		
8530	W	WYK-146-1	K13-WYK	D13-WYK		
8725	W	WYJ-227-1	K20-WYJ	D20-WYJ	49-882	
8725	W	WYJ-282-1	K20-WYJ	D20-WYJ	49-882	
16 R	W	WA-94-1	K10-WAT	D10-WAT	49-816	49-812
248T	T	HS-227A	RK-23HS	DG-5HS	49-803	49-802
26 cc	W	WYJ-205-1	K20-WYJ	D20-WYJ	49-882	
26 cc	W	WYJ-255-1	K20-WYJ	D20-WYJ	49-882	
264 TTA	W	WJ-25-1	K10-WJ	D10-WJ	49-873	49-843
264 TTA	W	WJ-58-1	K11-WJ	D11-WJ		
264 TTA	W	WJ-61-1	K11-WJ	D11-WJ		
265 TTA	W	WJ-58-1	K11-WJ	D11-WJ		
274 TTA	W	WJ-31-1	K11-WJ	D11-WJ		
284 TTA	W	WJ-31-1	K11-WJ	D11-WJ		
284 TTA	W	WJ-59-1	K11-WJ	D11-WJ		
50cc	W	WYK-193-1	K22-WYK	D22-WYK		
56 cc	W	HDA-168-1	K22-HDA	D22-HDA	49-853	49-852
56 cc	W	HDA-169-1	K22-HDA	D22-HDA	49-853	49-852
930 F	W	WT-66-1	K10-WAT	D10-WAT	49-816	49-812
935 DF	W	WT-66-1	K10-WAT	D10-WAT	49-816	49-812
935 F/DF	Z	C1Q-E5	RB-55	GND-39		
940 F	W	WT-96-1	K10-WAT	D10-WAT	49-816	49-812
940 F	W	WT-97-1	K10-WAT	D10-WAT	49-816	49-812
947 EPA	Z	C3-E9	RB-95	GND-54		49-874
952 EPA	Z	C3-E9	RB-95	GND-54		49-874
961 TTA	W	HDA-193-1	K22-HDA	D22-HDA	49-853	49-852
962TTA	W	HDA-207-1	K12-HDA	D11-HDA		
980 TTA	W	WJ-83-1	K15-WJ	D11-WJ		
980 TTA	W	WJ-85-1	K12-WJ	D10-WJ		49-843
980TTA	W	WJ-104-1	K14-WJ	D12-WJ		
999 F	W	WGA-4-1	K21-WGA	D10-WGA		

C

Carburetor Kit Application Chart

OEM ENGINE/UNIT		WALBRO CARBURETOR			OREGON	
Model	Carb	№	Kit	Gaskets	Kit	Gaskets
Efco/Emak /Olympk						
999 F	W	WGA-5-1	K21-WGA	D10-WGA		
999 F	W	WGA-1-1	K21-WGA	D10-WGA		
999 F	W	WGA-2-1	K21-WGA	D10-WGA		
999 F	W	WGA-6-1	K21-WGA	D10-WGA		
999 F	W	WGA-9-1	K21-WGA	D10-WGA		
999 ICS	W	WGA-9-1	K21-WGA	D10-WGA		
999 ICS	W	WGA-7-1	K21-WGA	D10-WGA		
999 TTA	W	WGA-8-1	K21-WGA	D10-WGA		
999 TTA	W	WGA-10-1	K21-WGA	D10-WGA		
999 TTG	W	WGA-3-1	K21-WGA	D10-WGA		
AQU-SCOOTER	W	HDA-115-1	K20-HDA	D10-HDA	49-845	
AQU-SCOOTER	W	HDA-83-1	K20-HDA	D10-HDA	49-845	
BV162	W	WYK-176-1	K21-WYK	D21-WYK		
EFCO 8742	Z	C1Q-E6	RB-47	GND-18		
EFC08300	Z	C1Q-E10	RB-76	GND-41		
EFC08300/8400	Z	C1Q-E7	RB-76	GND-41		
EFC08350	Z	C1Q-E10	RB-76	GND-41		
EFC08400	Z	C1Q-E7	RB-76	GND-41		
EFC08400	Z	C1Q-E10	RB-76	GND-41		
GDO 26cc	W	WYL-159-1	K20-WYL	D11-WYL		
ICS 633 GC	W	WGA-11-1	K21-WGA	D10-WGA		
JET 200	W	WZ-19-1	K10-WZ	D10-WZ	49-877	49-848
JET 200	W	WYK-26-1	K21-WYK	D21-WYK		
JET 220	W	WT-151-1	K20-WAT	D20-WAT	49-831	49-844
JET 220	W	WYK-26-1	K21-WYK	D21-WYK		
JET 220	W	WZ-19-1	K10-WZ	D10-WZ	49-877	49-848
JET 220	W	WT-82-1	K10-WAT	D10-WAT	49-816	49-812
JET 260	W	WT-151-1	K20-WAT	D20-WAT	49-831	49-844
JET 260	W	WYK-26-1	K21-WYK	D21-WYK		
JET 260	W	WZ-19-1	K10-WZ	D10-WZ	49-877	49-848
JET 260	W	WYJ-167-1	K20-WYJ	D20-WYJ	49-882	
JET 260	W	WT-82-1	K10-WAT	D10-WAT	49-816	49-812
JET 261	W	WZ-19-1	K10-WZ	D10-WZ	49-877	49-848
JET 300	Z	C1S-E2	RB-2	GND-2		49-881
JET 300	Z	C1Q-E3	RB-47	GND-18		
JET 300	Z	C1Q-E4	RB-47	GND-18		
JET 300	W	WT-137-1	K10-WAT	D10-WAT	49-816	49-812
JET 300	W	WT-178-1	K10-WAT	D10-WAT	49-816	49-812
JET 300	W	WT-196-1	K20-WAT	D20-WAT	49-831	49-844
JET 300	W	WT-259-1	K10-WAT	D10-WAT	49-816	49-812
JET 300	W	WT-93-1	K10-WAT	D10-WAT	49-816	49-812
JET 300	W	WZ-15-1	K10-WZ	D10-WZ	49-877	49-848
JET 300	W	WZ-7-1	K10-WZ	D10-WZ	49-877	49-848
JET 350	W	WZ-15-1	K10-WZ	D10-WZ	49-877	49-848
JET 350	W	WZ-7-1	K10-WZ	D10-WZ	49-877	49-848
JET 400	Z	C1S-E2	RB-2	GND-2		49-881
JET 400	Z	C1Q-E3	RB-47	GND-18		
JET 400	Z	C1Q-E4	RB-47	GND-18		
JET 400	W	WT-137-1	K10-WAT	D10-WAT	49-816	49-812
JET 400	W	WT-178-1	K10-WAT	D10-WAT	49-816	49-812
JET 400	W	WT-196-1	K20-WAT	D20-WAT	49-831	49-844
JET 400	W	WT-259-1	K10-WAT	D10-WAT	49-816	49-812
JET 400	W	WT-93-1	K10-WAT	D10-WAT	49-816	49-812
JET 400	W	WZ-15-1	K10-WZ	D10-WZ	49-877	49-848
JET 400	W	WZ-7-1	K10-WZ	D10-WZ	49-877	49-848
JET 460	W	WT-94-1	K10-WAT	D10-WAT	49-816	49-812
JET 8260	W	WYJ-167-1	K20-WYJ	D20-WYJ	49-882	
JET460AVS	Z	C1S-E1	RB-2	GND-2		49-881
King 400	W	WT-178-1	K10-WAT	D10-WAT	49-816	49-812
King 400	W	WZ-15-1	K10-WZ	D10-WZ	49-877	49-848
King 401	W	WZ-15-1	K10-WZ	D10-WZ	49-877	49-848
Super 100	W	WGA-10-1	K21-WGA	D10-WGA		
Super 60	W	WJ-58-1	K11-WJ	D11-WJ		
T 50	W	WA-94-1	K10-WAT	D10-WAT	49-816	49-812
Target Super 60	W	WJ-75-1	K12-WJ	D11-WJ		
Target Super 80	W	WJ-74-1	K12-WJ	D11-WJ		
TS 326	W	WYJ-228-1	K20-WYJ	D20-WYJ	49-882	
TS 327	W	WYJ-263-1	K20-WYJ	D20-WYJ	49-882	
TS 327	W	WYJ-264-1	K20-WYJ	D20-WYJ	49-882	
Efco/Emak /Olympk						
Unspecified	W	WYA-58-1	K20-WYA	D20-WYA		
Unspecified	W	WT-726-1	K10-WAT	D10-WAT	49-816	49-812
unspecified	W	WT-705-1	K26-WAT	D26-WAT		
Farmech Brush Cutter						
SDE260D-11	W	WYJ-426-1	K20-WYJ	D10-WYJ	49-882	
SE 230 D	W	WYL-155-1	K20-WYL	D11-WYL		

OEM ENGINE/UNIT		WALBRO CARBURETOR			OREGON	
Model	Carb	№	Kit	Gaskets	Kit	Gaskets
FHI Rammer						
EC 12	W	WJ-87-1	K14-WJ	D12-WJ		
EC 12	W	WJ-81-1	K14-WJ	D12-WJ		
EC 12	W	HDA-173-1	K22-HDA	D22-HDA	49-853	49-852
EC 12	W	WJ-84-1	K14-WJ	D12-WJ		
EC 12	W	HDA-172-1	K22-HDA	D22-HDA	49-853	49-852
EH 12	W	HDA-171-1	K24-HDA	D24-HDA		
Fichtel Lawnmower						
	W	LMJ-6-1	K10-LMJ			
	W	LMJ-5-1	K10-LMJ			
Fox Motori	W					
25 cc ENGINE	W	WT-337-1	K10-WAT	D10-WAT	49-816	49-812
44 cc ENGINE	W	WT-158-1	K10-WAT	D10-WAT	49-816	49-812
44 cc ENGINE	W	WT-159-1	K10-WAT	D10-WAT	49-816	49-812
Fradan						
30cc STRNO trimmer	Z	C1U-FD1	RB-48	GND-18		
FUJI	Z					
EC-10	Z	C3M-FJ1	RB-35	GND-24		
EC-12	Z	C3M-FJ2	RB-35	GND-24		
EC-12	Z	C3M-FJ3	RB-35	GND-24		
EC-12	Z	C3M-FJ4	RB-35	GND-24		
EC-12	Z	C3M-FJ5	RB-35	GND-24		
ECO 25 GA-2	Z	RB-FR2	RB-102	GND-52		
ECO 22 GA-2	Z	RB-FR3	RB-103	GND-52		
ECO 25 GA-2	Z	RB-FR4	RB-102	GND-52		
MFL500X	Z	C1M-FR1	RB-70	GND-43		
Hitachi						
CG 23	W	WZ-28-1	K10-WZ	D10-WZ	49-877	49-848
CG 26	W	WZ-28-1	K10-WZ	D10-WZ	49-877	49-848
CG 26 E	W	WZ-3-1	K10-WZ	D10-WZ	49-877	49-848
CG 26 EA	W	WZ-3-1	K10-WZ	D10-WZ	49-877	49-848
CG 33	W	WY-13-1	K10-WY	D10-WY	49-875	49-839
CG 33 EC	W	WYJ-46-1	K20-WYJ	D20-WYJ	49-882	
HMC (Green Machine)						
1600	W	WT-25-1	K10-WAT	D10-WAT	49-816	49-812
1700	W	WA-102-1	K10-WAT	D10-WAT	49-816	49-812
2300	W	WA-105-1	K10-WAT	D10-WAT	49-816	49-812
2499	W	WY-1-1	K10-WY	D10-WY	49-875	49-839
2800	W	WY-50-1	K10-WY	D10-WY	49-875	49-839
7200	W	WA-112-1	K10-WAT	D10-WAT	49-816	49-812
7400	W	WA-113-1	K10-WAT	D10-WAT	49-816	49-812
7600	W	HDA-27-1	K20-HDA	D10-HDA	49-845	
2500 LP	W	WY-1-1	K10-WY	D10-WY	49-875	49-839
25101 LP	W	WY-1-1	K10-WY	D10-WY	49-875	49-839
3000 LP	W	WY-4-1	K10-WY	D10-WY	49-875	49-839
4600 LP	W	HDA-26-1	K12-HDA	D11-HDA		
LJP-260	Z	C1U-M16	RB-28	GND-18	49-866	
Hoffco						
JP-260	Z	C1U-M16	RB-28	GND-18	49-866	
Homelite/John Deere						
150	W	HDC-20-1	K10-HDC	D10-HDC	49-833	49-807
200	Z	C1Q-H17	RB-54	GND-27		49-909
200	Z	C1Q-H17	RB-54	GND-27		49-909
200	Z	C1Q-H17	RB-54	GND-27		49-909
200	Z	C1Q-H17	RB-54	GND-27		49-909
220	W	WT-1-1	K10-WAT	D10-WAT	49-816	49-812
240	Z	C1S-H4	RB-5	GND-2		49-881
240	W	WT-2-1	K10-WAT	D10-WAT	49-816	49-812

CARB = Original OEM Carburetor

B = Bing
N = Nikki
T = Tillotson
TK = Teiki
W = Walbro
Z = Zama

*** No model information available

C

Carburetor Kit Application Chart

OEM ENGINE/UNIT		WALBRO CARBURETOR			OREGON	
Model	Carb	№	Kit	Gaskets	Kit	Gaskets
Homelite/John Deere						
240	W	WT-361-1	K20-WAT	D10-WAT	49-831	49-812
240	W	WT-6-1	K20-WAT	D10-WAT	49-831	49-812
240	W	WT-467-1	K20-WAT	D10-WAT	49-831	49-812
245	Z	C1S-H8	RB-5	GND-2		49-881
245	W	WT-19-1	K20-WAT	D10-WAT	49-831	49-812
250	Z	C1Q-H14	RB-39	GND-27	49-902	49-909
250	Z	C1Q-H27	RB-39	GND-27	49-902	49-909
250	W	WT-156-1	K20-WAT	D10-WAT	49-831	49-812
250	W	WT-185-1	K20-WAT	D10-WAT	49-831	49-812
250	W	WT-224-1	K20-WAT	D10-WAT	49-831	49-812
250	W	WT-316-1	K20-WAT	D10-WAT	49-831	49-812
250	W	WT-372-1	K10-WAT	D10-WAT	49-816	49-812
250	W	WT-282-1	K20-WAT	D10-WAT	49-831	49-812
290	W	WT-42-1	K20-WAT	D10-WAT	49-831	49-812
290	W	WT-72-1	K20-WAT	D10-WAT	49-831	49-812
300	W	HDA-109-1	K20-HDA	D10-HDA	49-845	
300	W	HDA-99-1	K20-HDA	D10-HDA	49-845	
300	W	WT-282-1	K20-WAT	D10-WAT	49-831	49-812
300	W	WT-373-1	K10-WAT	D10-WAT	49-816	49-812
320	W	HDA-59-1	K20-HDA	D10-HDA	49-845	
330	W	WT-1-1	K10-WAT	D10-WAT	49-816	49-812
330	W	WT-4-1	K10-WAT	D10-WAT	49-816	49-812
340	W	WT-72-1	K20-WAT	D10-WAT	49-831	49-812
340	W	WT-42-1	K20-WAT	D10-WAT	49-831	49-812
350	W	HDA-75-1	K20-HDA	D10-HDA	49-845	
350	W	HDC-16-1	K10-HDC	D10-HDC	49-833	49-807
350	W	HDC-21-1	K10-HDC	D10-HDC	49-833	49-807
350	W	HDC-23-1	K10-HDC	D10-HDC	49-833	49-807
350	W	HDC-33-1	K10-HDC	D10-HDC	49-833	49-807
350	W	HDC-39-1	K10-HDC	D10-HDC	49-833	49-807
350	W	HDC-47-1	K10-HDC	D10-HDC	49-833	49-807
350	W	HDC-77-1	K10-HDC	D10-HDC	49-833	49-807
350	W	HDC-81-1	K10-HDC	D10-HDC	49-833	49-807
350	W	HDC-46-1	K10-HDC	D10-HDC	49-833	49-807
360	W	HDA-75-1	K20-HDA	D10-HDA	49-845	
360	W	HDC-39-1	K10-HDC	D10-HDC	49-833	49-807
360	W	HDC-46-1	K10-HDC	D10-HDC	49-833	49-807
360	W	HDC-47-1	K10-HDC	D10-HDC	49-833	49-807
360	W	HDC-77-1	K10-HDC	D10-HDC	49-833	49-807
360	W	HDC-81-1	K10-HDC	D10-HDC	49-833	49-807
410	W	WS-21-1	K10-WS	D10-WS		49-814
410	W	WJ-5-1	K11-WJ	D11-WJ		
410	W	WS-22-1	K10-WS	D10-WS		49-814
420	W	HDA-59-1	K20-HDA	D10-HDA	49-845	
450	W	SDC-54-1	K10-SDC	D10-SDC	49-834	49-810
450	W	SDC-62-1	K10-SDC	D10-SDC	49-834	49-810
540	W	WJ-2-1	K10-WJ	D10-WJ	49-873	49-843
550	W	SDC-69-1	K10-SDC	D10-SDC	49-834	49-810
650	W	WB-2-1	K10-WB	D10-WB	49-872	49-869
750	W	WB-4-1	K10-WB	D10-WB	49-872	49-869
8800	W	WJ-2-1	K10-WJ	D10-WJ	49-873	49-843
8800	W	WJ-60-1	K10-WJ	D10-WJ	49-873	49-843
1050 A	W	SDC-60-1	K10-SDC	D10-SDC	49-834	49-810
1050 A	W	SDC-74-1	K10-SDC	D10-SDC	49-834	49-810
1130 GA	W	SDC-60-1	K10-SDC	D10-SDC	49-834	49-810
1130 GA	W	SDC-74-1	K10-SDC	D10-SDC	49-834	49-810
150 Auto	W	HDC-45-1	K10-HDC	D10-HDC	49-833	49-807
150 Auto	W	HDC-54-1	K10-HDC	D10-HDC	49-833	49-807
25 cc	W	MA-1-1				
25 cc	W	WT-318-1	K10-WAT	D10-WAT	49-816	49-812
30 cc	W	WTA-19-1				
30 cc	W	WTA-21-1				
30 cc	W	WT-277-1	K10-WAT	D10-WAT	49-816	49-812
30 cc	W	WT-370-1	K10-WAT	D10-WAT	49-816	49-812
30 cc	W	WT-470-1	K10-WAT	D10-WAT	49-816	49-812
30 cc	W	MA-1-1				
33 - 38CC chainsaw	Z	C1Q-H35	RB-54	GND-27		49-909
33 cc	W	WT-570-1	K26-WAT	D26-WAT		
33 cc	W	WT-433-1	K10-WAT	D10-WAT	49-816	49-812
33 cc	W	WT-433-1	K10-WAT	D10-WAT	49-816	49-812
330 (ARTIC)	Z	C1S-H7	RB-3	GND-2		49-881

CARB = Original OEM Carburetor

B = Bing
N = Nikki
T = Tillotson
TK = Teiki
W = Walbro
Z = Zama

*** No model information available

OEM ENGINE/UNIT		WALBRO CARBURETOR			OREGON	
Model	Carb	№	Kit	Gaskets	Kit	Gaskets
Homelite/John Deere						
330 (NON-ARTIC)	Z	C1S-H3	RB-3	GND-2		49-881
33-38CC SAW NON EM	Z	C1Q-H43	RB-54	GND-27		49-909
33-38CC SAW	Z	C1Q-H42	RB-54	GND-27		49-909
33cc	W	WT-772-1	K10-WAT	D10-WAT	49-816	49-812
33cc	W	WT-707-1	K20-WAT	D10-WAT	49-831	49-812
33cc	W	WT-673-1	K26-WAT	D26-WAT		
35 cc	W	HDC-78-1	K10-HDC	D10-HDC	49-833	49-807
350 P	W	HDC-47-1	K10-HDC	D10-HDC	49-833	49-807
350 P	W	HDC-26-1	K10-HDC	D10-HDC	49-833	49-807
360 HG	W	HDC-39-1	K10-HDC	D10-HDC	49-833	49-807
360 HG	W	HDC-47-1	K10-HDC	D10-HDC	49-833	49-807
360 HG	W	HDC-77-1	K10-HDC	D10-HDC	49-833	49-807
38 cc	W	WT-433-1	K10-WAT	D10-WAT	49-816	49-812
38 cc	W	WT-433-1	K10-WAT	D10-WAT	49-816	49-812
38 cc	W	WT-570-1	K26-WAT	D26-WAT		
38CC SAW	Z	C1M-H57	RB-57	GND-43		
40 cc	W	WT-192-1	K20-WAT	D10-WAT	49-831	49-812
40cc chain Saw	Z	C1Q-H64	RB-146	GND-82		
45CC C NON-EM	Z	C1Q-H45	RB-54	GND-27		49-909
45CC chain SAW	Z	C1Q-H44	RB-54	GND-27		49-909
45CC SAW	Z	C1M-H58	RB-57	GND-43		
AP 125	W	WT-502-1	K20-WAT	D10-WAT	49-831	49-812
AP 125	W	WT-244-1	K10-WAT	D10-WAT	49-816	49-812
BACK PAC BLOWER	Z	C1U-H37	RB-20	GND-12	49-864	49-851
BP 250	W	WT-199-1	K10-WAT	D10-WAT	49-816	49-812
BP 250	W	WT-371-1	K10-WAT	D10-WAT	49-816	49-812
BP 250	W	WT-419-1	K10-WAT	D10-WAT	49-816	49-812
BP 250	W	WT-150-1	K20-WAT	D10-WAT	49-831	49-812
BP-250	Z	C1U-H13	RB-20	GND-12	49-864	49-851
BX 90	W	WT-471-1	K10-WAT	D10-WAT	49-816	49-812
BX 90	W	WT-431-1	K10-WAT	D10-WAT	49-816	49-812
DM 38	W	HDA-106-1	K20-HDA	D10-HDA	49-845	
DM 50	W	SDC-71-1	K10-SDC	D10-SDC	49-834	49-810
E 200	W	WT-236-1	K10-WAT	D10-WAT	49-816	49-812
E 200	W	WT-280-1	K10-WAT	D10-WAT	49-816	49-812
ECO BACKPACK BLOWER	Z	LE-H56	RB-94	GND-12		49-851
ECO BLOWER	Z	LE-H55	RB-94	GND-12		49-851
ECO trimmer	Z	LE-H53	RB-86	GND-18		
ECO-SIMPLE START®	Z	LE-H54	RB-86	GND-49		
EZ	W	HDC-4-1	K10-HDC	D10-HDC	49-833	49-807
EZ	W	HDC-44-1	K10-HDC	D10-HDC	49-833	49-807
EZ	W	HDC-64-1	K10-HDC	D10-HDC	49-833	49-807
EZ 250	W	HDC-1-1	K10-HDC	D10-HDC	49-833	49-807
EZ 250 Auto	W	HDC-4-1	K10-HDC	D10-HDC	49-833	49-807
EZ Auto	W	HDC-1-1	K10-HDC	D10-HDC	49-833	49-807
EZ Auto	W	HDC-4-1	K10-HDC	D10-HDC	49-833	49-807
EZ Auto	W	HDC-44-1	K10-HDC	D10-HDC	49-833	49-807
EZ Auto	W	HDC-64-1	K10-HDC	D10-HDC	49-833	49-807
EZ Mini	W	HDC-2-1	K10-HDC	D10-HDC	49-833	49-807
EZ Mini Auto	W	HDC-4-1	K10-HDC	D10-HDC	49-833	49-807
FP 100	W	WB-12-1	K10-WB	D10-WB	49-872	49-869
Hand Held	W	WT-369-1	K10-WAT	D10-WAT	49-816	49-812
HB 380	W	WT-69-1	K20-WAT	D10-WAT	49-831	49-812
HB 480	W	WT-69-1	K20-WAT	D10-WAT	49-831	49-812
HB 680	W	WT-69-1	K20-WAT	D10-WAT	49-831	49-812
HB-180	Z	C1U-H11	RB-20	GND-12	49-864	49-851
HB-180	Z	C1U-H11	RB-20	GND-12	49-864	49-851
HBC 38	W	WT-213-1	K10-WAT	D10-WAT	49-816	49-812
HBC 38	W	WT-226-1	K10-WAT	D10-WAT	49-816	49-812
HBC 38	W	WA-213-1	K10-WAT	D10-WAT	49-816	49-812
HBC-40	Z	C1Q-H19	RB-39	GND-27	49-902	49-909
HBC-40	Z	C1Q-H19	RB-39	GND-27	49-902	49-909
HEDGE trimmer	Z	C1U-H40	RB-29	GND-12	49-285	49-851
HT 17	W	WT-423-1	K10-WAT	D10-WAT	49-816	49-812
HT 17	W	WT-117-1	K20-WAT	D10-WAT	49-831	49-812
HT 17	W	WT-206-1	K10-WAT	D10-WAT	49-816	49-812
HT 17	W	WT-173-1	K20-WAT	D10-WAT	49-831	49-812
HT-17	Z	C1U-H12A-B	RB-20	GND-12	49-864	49-851
HT-17	Z	C1U-H12C-D	RB-29	GND-12	49-285	49-851
HTC 12	W	WTA-26-1				
J 501	W	SDC-68-1	K10-SDC	D10-SDC	49-834	49-810
Jacobsen	W	HDA-59-1	K20-HDA	D10-HDA	49-845	
LE 30CC trimmer	Z	C1U-H60	RB-29	GND-18	49-285	
LX 30	W	WTA-20-1				
LX 30	W	WTA-23-1				
LX 30	W	WTA-24-1				
LX 30	W	WTA-25-1				
MP 38	W	HDA-162-1	K22-HDA	D22-HDA	49-853	49-852
MP 55	W	WJ-24-1	K10-WJ	D10-WJ	49-873	49-843

C

Carburetor Kit Application Chart

OEM ENGINE/UNIT		WALBRO CARBURETOR			OREGON	
Model	Carb	№	Kit	Gaskets	Kit	Gaskets
Homelite/John Deere						
MP 88	W	WJ-78-1	K10-WJ	D10-WJ	49-873	49-843
MP 88	W	WJ-90-1	K10-WJ	D10-WJ	49-873	49-843
P 100-1	W	HDC-68-1	K10-HDC	D10-HDC	49-833	49-807
P 100-1	W	HDC-72-1	K10-HDC	D10-HDC	49-833	49-807
P 125	W	WT-179-1	K20-WAT	D10-WAT	49-831	49-812
PBC3600/B	Z	C1U-H28	RB-28	GND-18	49-866	
PLT3400	Z	C1U-H28	RB-28	GND-18	49-866	
SIMPLE START® ST	Z	C1U-H46	RB-82	GND-49		
SIMPLE START® ST	Z	C1U-H49	RB-82	GND-49		
Snoburst	W	HDC-63-1	K10-HDC	D10-HDC	49-833	49-807
Sprayer	W	WA-95-1	K10-WAT	D10-WAT	49-816	49-812
ST 100	W	WA-130-1	K10-WAT	D10-WAT	49-816	49-812
ST 100	W	WA-159-1	K10-WAT	D10-WAT	49-816	49-812
ST 155	W	WT-165-1	K20-WAT	D10-WAT	49-831	49-812
ST 155	W	WT-191-1	K20-WAT	D10-WAT	49-831	49-812
ST 155	W	WT-220-1	K10-WAT	D10-WAT	49-816	49-812
ST 155	W	WT-71-1	K20-WAT	D10-WAT	49-831	49-812
ST 155	W	WT-95-1				
ST 160	W	HDC-70-1	K10-HDC	D10-HDC	49-833	49-807
ST 160	W	HDC-75-1	K10-HDC	D10-HDC	49-833	49-807
ST 160	W	HDC-80-1	K10-HDC	D10-HDC	49-833	49-807
ST 160	W	HDC-76-1	K20-HDA	D10-HDA	49-845	
ST 180	W	HDC-76-1	K20-HDA	D10-HDA	49-845	
ST 180	W	HDC-70-1	K10-HDC	D10-HDC	49-833	49-807
ST 200	W	HDC-59-1	K10-HDC	D10-HDC	49-833	49-807
ST 200	W	HDC-66-1	K10-HDC	D10-HDC	49-833	49-807
ST 200	W	HDC-69-1	K10-HDC	D10-HDC	49-833	49-807
ST 80	W	WA-83-1	K10-WAT	D10-WAT	49-816	49-812
ST-100	Z	C1S-H2	RB-3	GND-2		49-881
ST-120	Z	C1S-H2	RB-3	GND-2		49-881
ST-155	Z	C1U-H10	RB-20	GND-12	49-864	49-851
ST-155	Z	C1U-H10	RB-20	GND-12	49-864	49-851
ST-155	Z	C1U-H10	RB-20	GND-12	49-864	49-851
ST-155	Z	C1U-H18	RB-29	GND-12	49-285	49-851
ST-160A	Z	C2S-H9	RB-17	GND-9		
ST-175	Z	C1U-H10	RB-20	GND-12	49-864	49-851
ST-175	Z	C1U-H10	RB-20	GND-12	49-864	49-851
ST-175	Z	C1U-H10	RB-20	GND-12	49-864	49-851
ST-175	Z	C1U-H18	RB-29	GND-12	49-285	49-851
ST-175	Z	C1U-H18	RB-29	GND-12	49-285	49-851
ST200	W	HDC-73-1	K10-HDC	D10-HDC	49-833	49-807
ST-285	Z	C1U-H10	RB-20	GND-12	49-864	49-851
ST-285	Z	C1U-H10	RB-20	GND-12	49-864	49-851
ST-285	Z	C1U-H10	RB-20	GND-12	49-864	49-851
ST-285	Z	C1U-H18	RB-29	GND-12	49-285	49-851
ST-285	Z	C1U-H18	RB-29	GND-12	49-285	49-851
ST-385	Z	C1U-H10	RB-20	GND-12	49-864	49-851
ST-385	Z	C1U-H10	RB-20	GND-12	49-864	49-851
ST-385	Z	C1U-H10	RB-20	GND-12	49-864	49-851
ST-385	Z	C1U-H18	RB-29	GND-12	49-285	49-851
ST-385	Z	C1U-H18	RB-29	GND-12	49-285	49-851
ST-80	Z	C1S-H6	RB-3	GND-2		49-881
STRING TRIMMER	Z	C1U-H39	RB-29	GND-18	49-285	
STRING TRIMMER	Z	C1U-H41	RB-29	GND-18	49-285	
STRING TRIMMER	Z	C1U-H47	RB-29	GND-18	49-285	
STRING TRIMMER	Z	C1U-H48	RB-29	GND-18	49-285	
SUP-2	Z	C2S-H5	RB-19	GND-9	49-821-0	
SUP-2	Z	C2S-H5	RB-19	GND-9	49-821-0	
Super 1050 A	W	SDC-60-1	K10-SDC	D10-SDC	49-834	49-810
Super 1050 A	W	SDC-74-1	K10-SDC	D10-SDC	49-834	49-810
Super 1130 GA	W	SDC-60-1	K10-SDC	D10-SDC	49-834	49-810
Super 1130 GA	W	SDC-74-1	K10-SDC	D10-SDC	49-834	49-810
Super 2	W	HDA-60-1	K20-HDA	D10-HDA	49-845	
Super 2	W	HDC-27-1	K10-HDC	D10-HDC	49-833	49-807
Super 2	W	HDC-40-1	K10-HDC	D10-HDC	49-833	49-807
Super 2	W	HDC-48-1	K10-HDC	D10-HDC	49-833	49-807
Super 2	W	HDC-57-1	K10-HDC	D10-HDC	49-833	49-807
Super 2	W	HDC-65-1	K10-HDC	D10-HDC	49-833	49-807
Super 2 VI	W	HDC-37-1	K10-HDC	D10-HDC	49-833	49-807
Super 2 VI	W	HDC-41-1	K10-HDC	D10-HDC	49-833	49-807
Super 2 VI	W	HDC-67-1	K10-HDC	D10-HDC	49-833	49-807
Super 2 VI	W	HDC-58-1	K10-HDC	D10-HDC	49-833	49-807
Super 2 XL VI	W	HDC-67-1	K10-HDC	D10-HDC	49-833	49-807
Super EZ Auto	W	HDC-44-1	K10-HDC	D10-HDC	49-833	49-807
Super EZ Auto	W	HDC-64-1	K10-HDC	D10-HDC	49-833	49-807
Super XL	W	SDC-29-1	K10-SDC	D10-SDC	49-834	49-810
Super XL	W	SDC-62-1	K10-SDC	D10-SDC	49-834	49-810
Super XL	W	SDC-8-1	K10-SDC	D10-SDC	49-834	49-810
Super XL	W	SDC-87-1	K10-SDC	D10-SDC	49-834	49-810
Super XL 922	W	SDC-82-1	K10-SDC	D10-SDC	49-834	49-810

OEM ENGINE/UNIT		WALBRO CARBURETOR			OREGON	
Model	Carb	№	Kit	Gaskets	Kit	Gaskets
Homelite/John Deere						
Super XL 925	W	SDC-82-1	K10-SDC	D10-SDC	49-834	49-810
Super XL Auto	W	SDC-62-1	K10-SDC	D10-SDC	49-834	49-810
Super XL Auto	W	SDC-8-1	K10-SDC	D10-SDC	49-834	49-810
SX135	Z	C1U-H29	RB-29	GND-18	49-285	
SXL	Z	C2-20-02	RB-15	GND-8	49-836-0	49-860
SXL 130	T	HS-125B	RK-23HS	DG-5HS	49-803	49-802
SXL 925	T	HS-151A	RK-23HS	DG-5HS	49-803	49-802
SXL 925	W	WJ-27-1	K11-WJ	D11-WJ		
SXL Auto	T	HS-4D	RK-23HS	DG-5HS	49-803	49-802
TLE 43 FD	W	WYA-27-1	K20-WYA	D20-WYA		
Ultra "E"	W	WT-339-1	K10-WAT	D10-WAT	49-816	49-812
Ultra "E"	W	WT-405-1	K10-WAT	D10-WAT	49-816	49-812
Ultra 25 cc	W	WT-363-1	K20-WAT	D20-WAT	49-831	49-844
Ultra 25 cc	W	WT-458-1	K20-WAT	D20-WAT	49-831	49-844
Ultra 25 cc (Sears)	W	WT-476-1	K10-WAT	D10-WAT	49-816	49-812
Unspecified	W	WT-10-1	K10-WAT	D10-WAT	49-816	49-812
Unspecified	W	WT-654-1	K20-WAT	D20-WAT	49-831	49-844
Unspecified	W	WT-169-1	K20-WAT	D10-WAT	49-831	49-812
Unspecified	W	WT-212-1	K20-WAT	D10-WAT	49-831	49-812
Unspecified	W	WT-80-1	K20-WAT	D10-WAT	49-831	49-812
Unspecified	W	WT-420-1	K10-WAT	D10-WAT	49-816	49-812
Unspecified	W	WT-469-1	K10-WAT	D10-WAT	49-816	49-812
Unspecified	W	HDA-20-1	K20-HDA	D10-HDA	49-845	
Unspecified	W	HDA-20-1	K20-HDA	D10-HDA	49-845	
Unspecified	W	HDB-17-1	K10-HDB	D10-HDB	49-832	49-806
Unspecified	W	HDC-74-1	K10-HDC	D10-HDC	49-833	49-807
Unspecified	W	WYJ-37-1	K20-WYJ	D20-WYJ	49-882	
Unspecified	W	WA-191-1	K10-WAT	D10-WAT	49-816	49-812
Unspecified	W	WA-38-1	K10-WAT	D10-WAT	49-816	49-812
Unspecified	W	WY-18-1	K10-WY	D10-WY	49-875	49-839
Unspecified	W	WY-21-1	K10-WY	D10-WY	49-875	49-839
Unspecified	W	WYL-23-1	K20-WYL	D11-WYL		
Unspecified	W	WYL-3-1	K20-WYL	D11-WYL		
Unspecified	W	WYJ-104-1	K20-WYJ	D20-WYJ	49-882	
Unspecified	W	WYJ-136-1	K20-WYJ	D20-WYJ	49-882	
Unspecified	W	WY-50-1	K10-WY	D10-WY	49-875	49-839
Unspecified	W	WT-212-1	K20-WAT	D10-WAT	49-831	49-812
VI 130	W	SDC-81-1	K10-SDC	D10-SDC	49-834	49-810
VI Super 2	W	HDA-64-1	K20-HDA	D10-HDA	49-845	
XL	Z	C2S-H5	RB-19	GND-9	49-821-0	
XL	Z	C2S-H5	RB-19	GND-9	49-821-0	
XL	W	HDC-28-1	K10-HDC	D10-HDC	49-833	49-807
XL	W	HDC-42-1	K10-HDC	D10-HDC	49-833	49-807
XL	W	HDC-49-1	K10-HDC	D10-HDC	49-833	49-807
XL	W	HDC-55-1	K10-HDC	D10-HDC	49-833	49-807
XL	W	HDC-48-1	K10-HDC	D10-HDC	49-833	49-807
XL 101	W	SDC-1-1	K10-SDC	D10-SDC	49-834	49-810
XL 102	W	SDC-1-1	K10-SDC	D10-SDC	49-834	49-810
XL 103	W	SDC-1-1	K10-SDC	D10-SDC	49-834	49-810
XL 104	W	SDC-1-1	K10-SDC	D10-SDC	49-834	49-810
XL 12	W	SDC-29-1	K10-SDC	D10-SDC	49-834	49-810
XL 12	W	SDC-48-1	K10-SDC	D10-SDC	49-834	49-810
XL 12	W	SDC-62-1	K10-SDC	D10-SDC	49-834	49-810
XL 12	W	SDC-8-1	K10-SDC	D10-SDC	49-834	49-810
XL 12 Auto	W	SDC-29-1	K10-SDC	D10-SDC	49-834	49-810
XL 12 Auto	W	SDC-62-1	K10-SDC	D10-SDC	49-834	49-810
XL 12 Auto	W	SDC-8-1	K10-SDC	D10-SDC	49-834	49-810
XL 123	W	SDC-31-1	K10-SDC	D10-SDC	49-834	49-810
XL 150 Mini Auto	W	HDC-3-1	K10-HDC	D10-HDC	49-833	49-807
XL 2	W	HDC-15-1	K10-HDC	D10-HDC	49-833	49-807
XL 2	W	HDC-28-1	K10-HDC	D10-HDC	49-833	49-807
XL 2	W	HDC-42-1	K10-HDC	D10-HDC	49-833	49-807
XL 2	W	HDC-48-1	K10-HDC	D10-HDC	49-833	49-807
XL 2	W	HDC-49-1	K10-HDC	D10-HDC	49-833	49-807
XL 2	W	HDC-55-1	K10-HDC	D10-HDC	49-833	49-807
XL 2 F	W	HDC-35-1	K10-HDC	D10-HDC	49-833	49-807
XL 2 S	W	HDC-35-1	K10-HDC	D10-HDC	49-833	49-807
XL 2 VI	W	HDC-49-1	K10-HDC	D10-HDC	49-833	49-807
XL 76	T	HS-125B	RK-23HS	DG-5HS	49-803	49-802
XL 921	T	HS-151A	RK-23HS	DG-5HS	49-803	49-802

CARB = Original OEM Carburetor

B = Bing
N = Nikki
T = Tillotson
TK = Teiki
W = Walbro
Z = Zama

*** No model information available

C

Carburetor Kit Application Chart

OEM ENGINE/UNIT		WALBRO CARBURETOR			OREGON	
Model	Carb	№	Kit	Gaskets	Kit	Gaskets
Homelite/John Deere						
XL 98 C	W	WJ-26-1	K11-WJ	D11-WJ		
XL 98 D	W	WJ-54-1	K11-WJ	D11-WJ		
XL Mini	W	HDC-1-1	K10-HDC	D10-HDC	49-833	49-807
XL Mini Auto	W	HDC-1-1	K10-HDC	D10-HDC	49-833	49-807
XL-12	T	HS-179B	RK-23HS	DG-5HS	49-803	49-802
XL-12	T	HS-195A	RK-23HS	DG-5HS	49-803	49-802
XL-12	Z	C2-20-02	RB-15	GND-8	49-836-0	49-860
XL-12	Z	C2S-H5	RB-19	GND-9	49-821-0	
XL-12	Z	C2S-H5	RB-19	GND-9	49-821-0	
XL-500	T	HS-4D	RK-23HS	DG-5HS	49-803	49-802
XL-98	T	HS-135B	RK-23HS	DG-5HS	49-803	49-802
XLS 1A	T	HS-5C	RK-23HS	DG-5HS	49-803	49-802
Honda						
BC/ST	Z	C1Q-SK8	RB-68	GND-17		49-880
BC/ST	Z	C1Q-SK10	RB-68	GND-17		49-880
GX 100	W	HDA-201-1	K12-HDA	D11-HDA		
GX 100	W	HDA-206-1	K12-HDA	D11-HDA		
GX 100	W	HDA-201-1	K12-HDA	D11-HDA		
GX 22	W	WYL-130-1	K20-WYL	D11-WYL		
GX 22	W	WYL-126-1	K20-WYL	D11-WYL		
GX 22	W	WYL-129-1	K20-WYL	D11-WYL		
GX 22	W	WYL-131-1	K20-WYL	D11-WYL		
GX 22	W	WYL-73-1	K20-WYL	D11-WYL		
GX 22	W	WYL-96-1	K20-WYL	D11-WYL		
GX 22	W	WYL-67-1	K20-WYL	D11-WYL		
GX 22	W	WYL-62-1	K20-WYL	D11-WYL		
GX 22	W	WYL-128-1	K20-WYL	D11-WYL		
GX 22	W	WYL-132-1	K20-WYL	D11-WYL		
GX 22	W	WYL-83-1	K20-WYL	D11-WYL		
GX 22	W	WYL-98-1	K20-WYL	D11-WYL		
GX 22	W	WYL-82-1	K20-WYL	D11-WYL		
GX 31	W	WYL-68-1	K20-WYL	D11-WYL		
GX 31	W	WYL-97-1	K20-WYL	D11-WYL		
GX 31	W	WYL-75-1	K20-WYL	D11-WYL		
GX 31	W	WYL-74-1	K20-WYL	D11-WYL		
GX 31	W	WYL-127-1	K20-WYL	D11-WYL		
GX 31	W	WYL-133-1	K20-WYL	D11-WYL		
GX 31	W	WYL-63-1	K20-WYL	D11-WYL		
GX 31	W	WYL-135-1	K20-WYL	D11-WYL		
GX 31	W	WYL-99-1	K20-WYL	D11-WYL		
GX 31	W	WYL-78-1	K20-WYL	D11-WYL		
GX 31	W	WYL-79-1	K20-WYL	D11-WYL		
GX 31	W	WYL-134-1	K20-WYL	D11-WYL		
GX 31	W	WYL-97-1	K20-WYL	D11-WYL		
GX100	W	HDA-228-1	K20-HDA	D20-HDA	49-845	49-835
GX100	W	HDA-234-1	K20-HDA	D11-HDA	49-845	
GX25	W	WYB-6-1	K10-WYB	D10-WYB		
GX25	W	WYB-8-1	K10-WYB	D10-WYB		
GX25	W	WYB-7-1	K10-WYB	D10-WYB		
GX25	W	WYB-10	K10-WYB	D10-WYB		
GX25	W	WYB-12-1	K10-WYB	D10-WYB		
GX-25	W	WYB-17-1	K10-WYB	D10-WYB		
GX-25	W	WYB-18-1	K10-WYB	D10-WYB		
GX-25	W	WYB-9-1	K10-WYB	D10-WYB		
GX-25	W	WYB-21-1	K10-WYB	D10-WYB		
GX31	W	WYL-166-1	K10-WYB	D10-WYB		
GX-35	W	WYB-16-1	K10-WYB	D10-WYB		
GX-35	W	WYB-15-1	K10-WYB	D10-WYB		
GX-35	W	WYB-14-1	K10-WYB	D10-WYB		
GX-35	W	WYB-22-1	K10-WYB	D10-WYB		
GX-35	W	WYB-23-1	K10-WYB	D10-WYB		
GX-35	W	WYB-24-1	K10-WYB	D10-WYB		
ZM 3	W	WYL-105-1	K20-WYL	D11-WYL		
ZM 3A	W	WYL-62-1	K20-WYL	D11-WYL		
ZM 5	W	WYL-115-1	K20-WYL	D11-WYL		
ZM 5A	W	WYL-74-1	K20-WYL	D11-WYL		
ZM 5A	W	WYL-75-1	K20-WYL	D11-WYL		
ZODA	W	HDA-201-1	K12-HDA	D11-HDA		
ZODA	W	HDA-206A	K12-HDA	D11-HDA		

CARB = Original OEM Carburetor

B = Bing
N = Nikki
T = Tillotson
TK = Teiki
W = Walbro
Z = Zama

*** No model information available

OEM ENGINE/UNIT		WALBRO CARBURETOR			OREGON	
Model	Carb	№	Kit	Gaskets	Kit	Gaskets
ZODA	W	HDA-201-1	K12-HDA	D11-HDA		
Husqvarna						
33	W	WT-98-1	K20-WAT	D10-WAT	49-831	49-812
33	W	WT-67A	K20-WAT	D10-WAT	49-831	49-812
40	Z	C1Q-EL1	RB-45	GND-33		49-884
42	W	HDA-34-1	K20-HDA	D10-HDA	49-845	
42	W	HDA-108-1	K20-HDA	D10-HDA	49-845	
Husqvarna						
42	W	HDA-84-1	K20-HDA	D10-HDA	49-845	
42	W	HDA-98-1	K20-HDA	D10-HDA	49-845	
44	W	HDA-24-1	K20-HDA	D10-HDA	49-845	
44	W	HDC-32-1	K10-HDC	D10-HDC	49-833	49-807
44	W	HDC-51-1	K10-HDC	D10-HDC	49-833	49-807
45	Z	C1Q-EL1	RB-45	GND-33		49-884
45	Z	C1Q-EL5	RB-45	GND-33		49-884
49	Z	C1Q-EL1	RB-45	GND-33		49-884
49	Z	C1Q-EL5	RB-45	GND-33		49-884
51	Z	C1Q-EL6	RB-45	GND-33		49-884
51	Z	C1Q-EL7	RB-45	GND-33		49-884
51	W	WT-170-1	K20-WAT	D10-WAT	49-831	49-812
55	Z	C1Q-EL6	RB-45	GND-33		49-884
55	Z	C1Q-EL7	RB-45	GND-33		49-884
55	W	WT-170-1	K20-WAT	D10-WAT	49-831	49-812
61	T	HS-163A	RK-23HS	DG-5HS	49-803	49-802
61	W	WJ-40-1	K10-WJ	D10-WJ	49-873	49-843
65	T	HS-123A	RK-23HS	DG-5HS	49-803	49-802
66	T	HS-224A	RK-23HS	DG-5HS	49-803	49-802
77	T	HS-123A	RK-23HS	DG-5HS	49-803	49-802
133	W	HDA-1-1	K20-HDA	D10-HDA	49-845	
133	W	HDA-12-1	K20-HDA	D10-HDA	49-845	
162	T	HS-163A	RK-23HS	DG-5HS	49-803	49-802
162	W	WS-17-1	K10-WS	D10-WS		49-814
234	W	HDA-12-1	K20-HDA	D10-HDA	49-845	
234	W	HDA-19-1	K20-HDA	D10-HDA	49-845	
238	W	HDA-19-1	K20-HDA	D10-HDA	49-845	
238	W	HDA-34-1	K20-HDA	D10-HDA	49-845	
242	W	HDA-108-1	K20-HDA	D10-HDA	49-845	
242	W	HDA-84-1	K20-HDA	D10-HDA	49-845	
242	W	HDA-98-1	K20-HDA	D10-HDA	49-845	
254	W	HDA-101-1	K20-HDA	D10-HDA	49-845	
254	W	HDA-107-1	k20-HDA	D10-HDA	49-845	
254	W	HDA-35-1	K20-HDA	D10-HDA	49-845	
262	W	HDA-117-1	K20-HDA	D10-HDA	49-845	
262	W	HDA-120-1	K20-HDA	D10-HDA	49-845	
262	W	HDA-87-1	K20-HDA	D10-HDA	49-845	
262	W	HDA-144-1	K20-HDA	D10-HDA	49-845	
262	W	HDA-144-1	K20-HDA	D10-HDA	49-845	
262	W	HDA-144-1	K20-HDA	D10-HDA	49-845	
272	T	HS-260A	RK-23HS	DG-5HS	49-803	49-802
288	T	HS-228C	RK-23HS	DG-5HS	49-803	49-802
298	T	HS-136C	RK-23HS	DG-5HS	49-803	49-802
340	Z	C3-EL18	RB-122	GND-65		
345	Z	C3-EL18	RB-122	GND-65		
350	Z	C3-EL18	RB-122	GND-65		
351	Z	C3-EL17	RB-122	GND-65		
351	Z	C3-EL18	RB-122	GND-65		
353	Z	C3-EL17	RB-122	GND-65		
353	Z	C3-EL18	RB-122	GND-65		
355	Z	C3-EL15	RB-95	GND-54		49-874
355	Z	C3-EL16	RB-95	GND-54		49-874
360	W	WT-98-1	K20-WAT	D10-WAT	49-831	49-812
365	Z	C3M-EL2	RB-60	GND-24		
365	Z	C3M-EL8	RB-60	GND-24		
370	W	WT-98-1	K20-WAT	D10-WAT	49-831	49-812
371	W	HD-20-1	K20-HD	D10-HD		49-847
371	W	HD-30-1	K20-HD	D10-HD		49-847
394	W	WJ-39	K10-WJ	D10-WJ	49-873	49-843
394	W	WJ-70-1	K10-WJ	D10-WJ	49-873	49-843
394	W	WJ-71-1	K13-WJ	D10-WJ		49-843
440	W	HDA-68-1	K20-HDA	D10-HDA	49-845	
444	W	HDC-51-1	K10-HDC	D10-HDC	49-833	49-807
450	W	HDA-52-1	K20-HDA	D10-HDA	49-845	
525	W	HDA-52-1	K20-HDA	D10-HDA	49-845	
700	W	WJ-1-1	K10-WJ	D10-WJ	49-873	49-843
750	Z	C3-EL29	RB-133	GND-73		
2051	W	HDA-68-1	K20-HDA	D10-HDA	49-845	
2054	W	HDA-143-1	K20-HDA	D10-HDA	49-845	
2054	W	HDA-119-1	K20-HDA	D10-HDA	49-845	

Carburetor Kit Application Chart

OEM ENGINE/UNIT		WALBRO CARBURETOR			OREGON	
Model	Carb	№	Kit	Gaskets	Kit	Gaskets
Husqvarna						
2055	W	HDA-119-1	K20-HDA	D10-HDA	49-845	
2055	W	HDA-143-1	K20-HDA	D10-HDA	49-845	
2077	W	WJ-106-1	K12-WJ	D11-WJ		
2077	W	WJ-77-1	K13-WJ	D10-WJ		49-843
2100	T	HS-136C	RK-23HS	DG-5HS	49-803	49-802
3120	W	WG-10-1	K12-WG	D12-WG		
140 S	W	HDC-32-1	K10-HDC	D10-HDC	49-833	49-807
140R	T	HU-37C	RK-14HU	DG-3HU	49-805	49-804
16 R	W	WA-74-1	K10-WAT	D10-WAT	49-816	49-812
165RX	T	HS-121A	RK-23HS	DG-5HS	49-803	49-802
185K	T	HS-175D	RK-23HS	DG-5HS	49-803	49-802
22 R	W	WY-55-1	K10-WY	D10-WY	49-875	49-839
22 R	W	WY-55-1	K10-WY	D10-WY	49-875	49-839
22 RL	W	WY-55-1	K10-WY	D10-WY	49-875	49-839
225 HT	W	WT-450-1	K10-WAT	D10-WAT	49-816	49-812
225 R	W	WT-270-1	K10-WAT	D10-WAT	49-816	49-812
225 R	W	WT-573-1	K20-WAT	D20-WAT	49-831	49-844
225 R	W	WT-548-1	K10-WAT	D10-WAT	49-816	49-812
225 R	W	WT-449-1	K10-WAT	D10-WAT	49-816	49-812
225 R	W	WT-406-1	K10-WAT	D10-WAT	49-816	49-812
232 R	W	WT-548-1	K10-WAT	D10-WAT	49-816	49-812
232 R	W	WT-573-1	K20-WAT	D20-WAT	49-831	49-844
232 R	W	WT-270-1	K10-WAT	D10-WAT	49-816	49-812
235 R	W	WT-270-1	K10-WAT	D10-WAT	49-816	49-812
235 R	W	WT-573-1	K20-WAT	D20-WAT	49-831	49-844
235 R	W	WT-548-1	K10-WAT	D10-WAT	49-816	49-812
240 S	W	HDC-32-1	K10-HDC	D10-HDC	49-833	49-807
240 SE	W	HDC-32-1	K10-HDC	D10-HDC	49-833	49-807
240 SG	W	HDC-32-1	K10-HDC	D10-HDC	49-833	49-807
244 RX	W	WT-17-1	K20-WAT	D10-WAT	49-831	49-812
244 RX	W	WT-99-1	K20-WAT	D10-WAT	49-831	49-812
25 R	W	WY-55-1	K10-WY	D10-WY	49-875	49-839
25 RL	W	WY-55-1	K10-WY	D10-WY	49-875	49-839
250 RX	W	HDA-142-1	K21-HDA	D10-HDA		
250 RX	W	HDA-86-1	K20-HDA	D10-HDA	49-845	
252 RX	W	HDA-142-1	K21-HDA	D10-HDA		
265RX	T	HS-121A	RK-23HS	DG-5HS	49-803	49-802
322L	Z	C1Q-EL11	RB-69	GND-39	49-904	
323HD	Z	C1Q-EL14	RB-69	GND-39	49-904	
323L	Z	C1Q-EL11	RB-69	GND-39	49-904	
323L	Z	C1Q-EL12	RB-69	GND-39	49-904	
325 HS	Z	C1Q-EL26	RB-69	GND-39	49-904	
325HDA	Z	C1Q-EL13	RB-69	GND-39	49-904	
325HE	Z	C1Q-EL13	RB-69	GND-39	49-904	
325HS	Z	C1Q-EL13	RB-69	GND-39	49-904	
325L	Z	C1Q-EL11	RB-69	GND-39	49-904	
325L	Z	C1Q-EL12	RB-69	GND-39	49-904	
325R	Z	C1Q-EL14	RB-69	GND-39	49-904	
326 HS	Z	C1Q-EL25	RB-69	GND-39	49-904	
326L	Z	C1Q-EL12	RB-69	GND-39	49-904	
326R	Z	C1Q-EL14	RB-69	GND-39	49-904	
335 Base Primer	Z	C1Q-EL20	RB-109	GND-59		
335 External Purge	Z	C1Q-EL19	RB-108	GND-39		
34 cc	W	WT-13-1	K20-WAT	D10-WAT	49-831	49-812
343F	Z	C1Q-EL21	RB-41	GND-35	49-898	
343R	Z	C1Q-EL22	RB-41	GND-35	49-898	
345FX	Z	C1Q-EL21	RB-41	GND-35	49-898	
345RX	Z	C1Q-EL22	RB-41	GND-35	49-898	
346XPT	Z	C3-EL17	RB-122	GND-65		
346XPT	Z	C3-EL18	RB-122	GND-65		
36R	T	HU-37C	RK-14HU	DG-3HU	49-805	49-804
37 BR	W	WT-13-1	K20-WAT	D10-WAT	49-831	49-812
371 XP	W	HD-6B-1	K10-HD	D10-HD	49-849	49-847
371 XP	W	HD-12-1	K10-HD	D10-HD	49-849	49-847
371 XP	W	HD-12-1	K10-HD	D10-HD	49-849	49-847
371 XP	W	HD-6-1	K10-HD	D10-HD	49-849	49-847
371 XP	W	HD-6-1	K10-HD	D10-HD	49-849	49-847
39 R	W	WT-17-1	K20-WAT	D10-WAT	49-831	49-812
61 P	W	WS-17-1	K10-WS	D10-WS		49-814
A 55	W	WJ-1-1	K10-WJ	D10-WJ	49-873	49-843
A 55	W	WS-10-1	K10-WS	D10-WS		49-814
B440	T	HU-37C	RK-14HU	DG-3HU	49-805	49-804
F 55	W	WJ-1-1	K10-WJ	D10-WJ	49-873	49-843
F 55	W	WS-10-1	K10-WS	D10-WS		49-814
F 65	W	WJ-1-1	K10-WJ	D10-WJ	49-873	49-843
F 65	W	WS-10-1	K10-WS	D10-WS		49-814
H 225 R	W	WT-500-1	K10-WAT	D10-WAT	49-816	49-812
H 225 R	W	WT-421-1	K10-WAT	D10-WAT	49-816	49-812
H 232	W	WT-398-1	K10-WAT	D10-WAT	49-816	49-812
H 235 R	W	WT-398-1	K10-WAT	D10-WAT	49-816	49-812

OEM ENGINE/UNIT		WALBRO CARBURETOR			OREGON	
Model	Carb	№	Kit	Gaskets	Kit	Gaskets
Husqvarna						
H 235 R	W	WT-408-1	K10-WAT	D10-WAT	49-816	49-812
H 245	W	HDA-187-1	K22-HDA	D22-HDA	49-853	49-852
H 3120	W	WG-4-1	K20-WGA	D10-WGA		
H 3120	W	WG-6-1	K12-WGA	D12-WGA		
H 3120	W	WG-8-1	K12-WGA	D12-WGA		
H 3120	W	WG-7-1	K12-WG	D12-WG		
H 335	W	WT-582-1	K20-WAT	D20-WAT	49-831	49-844
H 335	W	WT-532-1	K20-WAT	D10-WAT	49-831	49-812
H 335	W	WT-560-1	K20-WAT	D20-WAT	49-831	49-844
H 335	W	WT-559-1	K26-WAT	D20-WAT		49-844
H 336	W	WT-559-1	K26-WAT	D20-WAT		49-844
H 336	W	WT-560-1	K20-WAT	D20-WAT	49-831	49-844
H 340	W	HDA-154-1	K22-HDA	D22-HDA	49-853	49-852
H 345	W	HDA-154-1	K22-HDA	D22-HDA	49-853	49-852
H 346	W	HDA-182-1	K24-HDA	D20-HDA		49-835
H 350	W	HDA-154-1	K22-HDA	D22-HDA	49-853	49-852
H 351	W	HDA-154-1	K22-HDA	D22-HDA	49-853	49-852
H 40	W	WT-99-1	K20-WAT	D10-WAT	49-831	49-812
H181	T	HS-216C	RK-23HS	DG-5HS	49-803	49-802
H2101	T	HS-136J	RK-23HS	DG-5HS	49-803	49-802
H266	T	HS-224A	RK-23HS	DG-5HS	49-803	49-802
H-268	T	HS-254A	RK-23HS	DG-5HS	49-803	49-802
H268XP	T	HS-234B	RK-23HS	DG-5HS	49-803	49-802
H-268XPS	T	HS-260A	RK-23HS	DG-5HS	49-803	49-802
H-281	T	HS-228C	RK-23HS	DG-5HS	49-803	49-802
H340	W	HDA-195-1	K22-HDA	D22-HDA	49-853	49-852
H346	W	HDA-197-1	K23-HDA	D20-HDA		49-835
H356 BF	Z	C1Q-EL27	RB-41	GND-35	49-898	
H480	T	HS-205A	RK-23HS	DG-5HS	49-803	49-802
H66	T	HS-224A	RK-23HS	DG-5HS	49-803	49-802
HR 39	W	WT-99-1	K20-WAT	D10-WAT	49-831	49-812
K 3120	W	WG-9-1	K12-WG	D12-WG		
K 540	W	WT-353-1	K20-WAT	D10-WAT	49-831	49-812
P 359	W	HDA-188-1	K22-HDA	D22-HDA	49-853	49-852
P 400	W	WT-17-1	K20-WAT	D10-WAT	49-831	49-812
P 400	W	WT-8-1	K20-WAT	D10-WAT	49-831	49-812
P 400	W	WT-99-1	K20-WAT	D10-WAT	49-831	49-812
P 42	W	WJ-20-1	K10-WJ	D10-WJ	49-873	49-843
P 42	W	WJ-9-1	K10-WJ	D10-WJ	49-873	49-843
P 42 T	W	WJ-21-1	K10-WJ	D10-WJ	49-873	49-843
P 442	W	WT-8-1	K20-WAT	D10-WAT	49-831	49-812
P 52	W	WJ-20-1	K10-WJ	D10-WJ	49-873	49-843
P 52	W	WJ-9-1	K10-WJ	D10-WJ	49-873	49-843
P 5500	W	WT-109-1	K20-WAT	D10-WAT	49-831	49-812
P 600	W	WT-350-1	K20-WAT	D10-WAT	49-831	49-812
P 62	W	WJ-20-1	K10-WJ	D10-WJ	49-873	49-843
P 62	W	WJ-9-1	K10-WJ	D10-WJ	49-873	49-843
P 650	W	WJ-7-1	K10-WJ	D10-WJ	49-873	49-843
P 7000	W	WJ-7-1	K10-WJ	D10-WJ	49-873	49-843
P 7700	W	WJ-28-1	K10-WJ	D10-WJ	49-873	49-843
P 901	W	HDA-159-1	K21-HDA	D10-HDA		
P 933	W	WT-459-1	K20-WAT	D10-WAT	49-831	49-812
P 933	W	WT-480-1	K20-WAT	D10-WAT	49-831	49-812
P 954	W	HDA-191-1	K24-HDA	D24-HDA		
P 954	W	HDA-175-1	K24-HDA	D24-HDA		
P901	W	HDA-196-1	K22-HDA	D22-HDA	49-853	49-852
P901	Z	C3-EL32	RB-155	GND-65	0	
P954	W	HDA-198-1	K24-HDA	D24-HDA		
P954	W	HDA-199-1	K24-HDA	D24-HDA		
P954	W	HDA-190-1	K24-HDA	D24-HDA		
PS 50	W	HDA-142-1	K21-HDA	D10-HDA		
R 39	W	WT-17-1	K20-WAT	D10-WAT	49-831	49-812
R 40	W	WT-17-1	K20-WAT	D10-WAT	49-831	49-812
R 8	W	WT-235-1	K10-WAT	D10-WAT	49-816	49-812
R15	Z	C1Q-EL23	RB-41	GND-35	49-898	
R16	Z	C1Q-EL24	RB-69	GND-39	49-904	
R18	Z	C1Q-EL30	RB-118	GND-39	0	
Rancher 40	W	WT-17-1	K20-WAT	D10-WAT	49-831	49-812
Rancher 50	W	WA-82-1	K10-WAT	D10-WAT	49-816	49-812
RS 51	W	HDA-86-1	K20-HDA	D10-HDA	49-845	

CARB = Original OEM Carburetor

B = Bing
N = Nikki
T = Tillotson
TK = Teiki
W = Walbro
Z = Zama

*** No model information available

C

Carburetor Kit Application Chart

OEM ENGINE/UNIT		WALBRO CARBURETOR			OREGON	
Model	Carb	№	Kit	Gaskets	Kit	Gaskets
Husqvarna						
RS 51	W	HDA-142-1	K21-HDA	D10-HDA		
Unspecified	W	WT-53-1	K10-WAT	D10-WAT	49-816	49-812
IDC (See Ryobi)						
Jonsered						
52	T	HS-21D	RK-23HS	DG-5HS	49-803	49-802
70	T	HS-101C	RK-23HS	DG-5HS	49-803	49-802
80	T	HS-101C	RK-23HS	DG-5HS	49-803	49-802
90	T	HS-101C	RK-23HS	DG-5HS	49-803	49-802
410	T	HK-28C		DG-1HK		49-800
450	T	HK-23E		DG-1HK		49-800
525	T	HK-23E		DG-1HK		49-800
535	T	HK-1A		DG-1HK		49-800
621	T	HS-21D	RK-23HS	DG-5HS	49-803	49-802
1020	T	HS-172B	RK-23HS	DG-5HS	49-803	49-802
2041	Z	C1Q-EL1	RB-45	GND-33		49-884
2045	Z	C1Q-EL1	RB-45	GND-33		49-884
2045	Z	C1Q-EL5	RB-45	GND-33		49-884
2050	Z	C1Q-EL1	RB-45	GND-33		49-884
2050	Z	C1Q-EL5	RB-45	GND-33		49-884
2065	Z	C3M-EL2	RB-60	GND-24		
2065	Z	C3M-EL8	RB-60	GND-24		
2141	Z	C3-EL18	RB-122	GND-65		
2145	Z	C3-EL18	RB-122	GND-65		
2149	Z	C3-EL17	RB-122	GND-65		
2149	Z	C3-EL18	RB-122	GND-65		
2150	Z	C3-EL18	RB-122	GND-65		
2152	Z	C3-EL17	RB-122	GND-65		
2152	Z	C3-EL18	RB-122	GND-65		
2165	Z	C3M-EL2	RB-60	GND-24		
2165	Z	C3M-EL8	RB-60	GND-24		
BC2125	Z	C1Q-EL14	RB-69	GND-39	49-904	
GC2125	Z	C1Q-EL12	RB-69	GND-39	49-904	
GT2125	Z	C1Q-EL12	RB-69	GND-39	49-904	
J2094	T	HS-238B	RK-23HS	DG-5HS	49-803	49-802
J2094	T	HS-265A	RK-23HS	DG-5HS	49-803	49-802
J625	T	HS-237A	RK-23HS	DG-5HS	49-803	49-802
J625	T	HS-251A	RK-23HS	DG-5HS	49-803	49-802
J630	T	HS-218A	RK-23HS	DG-5HS	49-803	49-802
J630	T	HS-225A	RK-23HS	DG-5HS	49-803	49-802
J630	T	HS-252A	RK-23HS	DG-5HS	49-803	49-802
J630 REC	T	HS-257A	RK-23HS	DG-5HS	49-803	49-802
J630 S	T	HS-256A	RK-23HS	DG-5HS	49-803	49-802
J670	T	HS-230C	RK-23HS	DG-5HS	49-803	49-802
J670	T	HS-250A	RK-23HS	DG-5HS	49-803	49-802
J830	T	HS-219C	RK-23HS	DG-5HS	49-803	49-802
J930	T	HS-219C	RK-23HS	DG-5HS	49-803	49-802
K1200	T	HS-175C	RK-23HS	DG-5HS	49-803	49-802
K650	T	HS-175C	RK-23HS	DG-5HS	49-803	49-802
RS44	Z	C1Q-EL10		GND-33		49-884
Kawasaki						
627	W	WYJ-221-1	K20-WYJ	D20-WYJ	49-882	
627	W	WYJ-222-1	K20-WYJ	D20-WYJ	49-882	
2680	W	WYA-59-1	K20-WYA	D20-WYA		
2680	W	WYA-45-1	K20-WYA	D20-WYA		
2685	W	WYA-63-1	K20-WYA	D20-WYA		
5727	W	WYA-69-1	K20-WYA	D20-WYA		
163 H/T	W	WYB-5-1	K10-WYB	D10-WYB		
AC 50	W	WYK-153-1	K21-WYK	D21-WYK		
AC 54	W	WYA-18-1	K20-WYA	D20-WYA		
AC 63	W	WYA-19-1	K20-WYA	D20-WYA		
AF 73	W	WYJ-302-1	K20-WYJ	D20-WYJ	49-882	
AG 20	W	WYK-128-1	K13-WYK	D21-WYK		
AG26	W	WYA-28-1	K20-WYA	D20-WYA		
EG 20	W	WYK-141-1	K21-WYK	D21-WYK		
FC 130 V	W	LMJ-7-1	K11-LMJ			

CARB = Original OEM Carburetor

B = Bing
N = Nikki
T = Tillotson
TK = Teiki
W = Walbro
Z = Zama

*** No model information available

OEM ENGINE/UNIT		WALBRO CARBURETOR			OREGON	
Model	Carb	№	Kit	Gaskets	Kit	Gaskets
Kawasaki						
FC 180 V	W	LMJ-13-1	K11-LMJ			
FC 180 V	W	LMJ-11-1	K11-LMJ			
FC 180 V	W	LMJ-9-1	K11-LMJ			
FG 20	W	WYK-140-1	K21-WYK	D21-WYK		
FH 430 V	W	LMF-1-1	K1-LMF			
FH 430 V	W	LMF-1-1	K1-LMF			
FH 580V	W	LMF-3-1	K1-LMF			
FH-411V	W	LMF-21-1	K1-LMF			
FH-411V	W	LMF-20-1	K1-LMF			
FH480V	W	LMF-17-1	K1-LMF			
FH480V	W	LMF-18-1	K1-LMF			
FH541V	W	LMF-14-1	K1-LMF			
FH541V	W	LMF-11-1	K1-LMF			
FH541V	W	LMF-12-1	K1-LMF			
FH541V	W	LMF-7-1	K1-LMF			
FH580V	W	LMF-9-1	K1-LMF			
FH580V	W	LMF-8-1	K1-LMF			
FJ100	W	LMJ-15-1	K11-LMJ			
FJ100	W	LMJ-18-1	K11-LMJ			
FJ100D	W	LMJ-23-1	K11-LMJ			
FJ100D	W	LMJ-22-1	K11-LMJ			
FJ100D	W	LMJ-25-1	K11-LMJ			
FJ100D	W	LMJ-20-1	K11-LMJ			
FJ100D	W	LMJ-30-1	K11-LMJ			
FJ100D	W	LMJ-27-1	K11-LMJ			
FJ100D	W	LMJ-35-1	K11-LMJ			
FJ100D	W	LMJ-34-1	K11-LMJ			
FJ100D	W	LMJ-27-1	K11-LMJ			
FJ180V	W	LMJ-32-1	K11-LMJ			
FJ180V	W	LMJ-33-1	K11-LMJ			
FJ80V	W	LMJ-17-1	K11-LMJ			
FJI80V	W	LMJ-16-1	K11-LMJ			
KT 12 ADV	W	WZ-26-1	K10-WZ	D10-WZ	49-877	49-848
TD 18 D	W	WA-171-1	K10-WAT	D10-WAT	49-816	49-812
TD 18 DVX	W	WA-170-1	K10-WAT	D10-WAT	49-816	49-812
TD 18 DVX	W	WA-170-1	K10-WAT	D10-WAT	49-816	49-812
TD 18 LD	W	WA-160-1	K10-WAT	D10-WAT	49-816	49-812
TE 040 D	W	HDA-110-1	K20-HDA	D10-HDA	49-845	
TE 040 DX	W	HDA-110-1	K20-HDA	D10-HDA	49-845	
TE 059 D	W	WYK-128-1	K13-WYK	D21-WYK		
TE 059 D	W	WYK-153-1	K21-WYK	D21-WYK		
TE 40	W	HDA-88-1	K20-HDA	D10-HDA	49-845	
TE 40 D	W	HDA-105-1	K12-HDA	D11-HDA		
TE 40 DX	W	HDA-138-1	K20-HDA	D10-HDA	49-845	
TE 45 DX	W	WYK-74-1	K21-WYK	D21-WYK		
TE 48	W	HDA-71-1	K20-HDA	D10-HDA	49-845	
TE 56	W	HDA-72-1	K20-HDA	D10-HDA	49-845	
TEO 040 D	W	HDA-102-1	K20-HDA	D10-HDA	49-845	
TEX 45 D	W	WYA-15-1	K20-WYA	D20-WYA		
TEX 45 D	W	WYK-91-1	K21-WYK	D13-WYK		
TEX 45 D	W	WYK-140-1	K21-WYK	D21-WYK		
TEX 45 D	W	WYA-19-1	K20-WYA	D20-WYA		
TEX 45 D	W	WYK-106-1	K21-WYK	D21-WYK		
TEX 45 DX	W	WYK-84-1	K21-WYK	D13-WYK		
TEX 54 D	W	WYK-95-1	K21-WYK	D13-WYK		
TEX 54 D	W	WYK-96-1	K21-WYK	D13-WYK		
TEX 54 D	W	WYK-97-1	K21-WYK	D13-WYK		
TEX 54 D	W	WYK-100-1	K21-WYK	D21-WYK		
TEX 54 D	W	WYK-101-1	K21-WYK	D21-WYK		
TEX 54 D	W	WYA-18-1	K20-WYA	D20-WYA		
TEX 54 D	W	WYK-141-1	K21-WYK	D21-WYK		
TEX54D-AE80	W	WYA-15-1	K20-WYA	D20-WYA		
TF 022 AF 70	W	WT-181-1	K10-WAT	D10-WAT	49-816	49-812
TF 022 BA	W	WY-59-1	K10-WY	D10-WY	49-875	49-839
TF 022 D	W	WYJ-232-1	K20-WYJ	D20-WYJ	49-882	
TF 022 D-AL50	W	WYJ-310-1	K20-WYJ	D20-WYJ	49-882	
TF 22 DVX	W	WY-51-1	K10-WY	D10-WY	49-875	49-839
TF 22 DVX	W	WT-138-1	K10-WAT	D10-WAT	49-816	49-812
TF 22 DVX	W	WY-64-1	K10-WY	D10-WY	49-875	49-839
TF 22 DVX	W	WY-66-1	K10-WY	D10-WY	49-875	49-839
TF 22 DVX	W	WY-67-1	K10-WY	D10-WY	49-875	49-839
TF 22 DVX	W	WYJ-127-1	K20-WYJ	D20-WYJ	49-882	
TF 22 DVX	W	WYJ-181-1	K20-WYJ	D20-WYJ	49-882	
TF 22 DVX	W	WYJ-212-1	K20-WYJ	D20-WYJ	49-882	
TF 22 DVX	W	WYJ-229-1	K20-WYJ	D20-WYJ	49-882	
TF 22 DVX	W	WYJ-175-1	K20-WYJ	D20-WYJ	49-882	
TF 22 DX	W	WT-138-1	K10-WAT	D10-WAT	49-816	49-812
TF 22D	W	WYJ-302-1	K20-WYJ	D20-WYJ	49-882	
TF 24	W	WY-69-1	K10-WY	D10-WY	49-875	49-839

C

Carburetor Kit Application Chart

OEM ENGINE/UNIT		WALBRO CARBURETOR			OREGON	
Model	Carb	№	Kit	Gaskets	Kit	Gaskets
Kawasaki						
TF 24	W	WYJ-116-1	K20-WYJ	D20-WYJ	49-882	
TF 24 DVX	W	WYJ-115-1	K20-WYJ	D20-WYJ	49-882	
TG 18	W	WA-205-1	K10-WAT	D10-WAT	49-816	49-812
TG 18 DVX	W	WA-209-1	K10-WAT	D10-WAT	49-816	49-812
TG 18 DVX	W	WYJ-231-1	K20-WYJ	D20-WYJ	49-882	
TG 18 DVX	W	WYJ-217-1	K20-WYJ	D20-WYJ	49-882	
TG 20	W	WA-205-1	K10-WAT	D10-WAT	49-816	49-812
TG 24 DX	W	WT-103-1	K10-WAT	D10-WAT	49-816	49-812
TG 24 DX	W	WT-188-1	K10-WAT	D10-WAT	49-816	49-812
TG 24 DX	W	WYJ-30-1	K20-WYJ	D20-WYJ	49-882	
TG 24 DX	W	WYK-12-1	K20-WYK	D20-WYK		
TG 25	W	WYJ-125-1	K20-WYJ	D20-WYJ	49-882	
TG 25 DX	W	WYJ-177-1	K20-WYJ	D20-WYJ	49-882	
TG 28 DX	W	WYJ-169-1	K20-WYJ	D20-WYJ	49-882	
TG 28 DX	W	WYJ-174-1	K20-WYJ	D20-WYJ	49-882	
TG 28 DX	W	WA-204-1	K10-WAT	D10-WAT	49-816	49-812
TG 33 DX	W	WA-204-1	K10-WAT	D10-WAT	49-816	49-812
TG 33 DX	W	WT-186-1	K10-WAT	D10-WAT	49-816	49-812
TGX 23	W	WYL-32-1	K20-WYL	D11-WYL		
TH 023 D	W	WYL-70-1	K20-WYL	D11-WYL		
TH 023 D	W	WYA-10-1	K20-WYA	D20-WYA		
TH 023 D	W	WYJ-234-1	K20-WYJ	D20-WYJ	49-882	
TH 023 D	W	WAY-4-1	K20-WYA	D20-WYA		
TH 023 D-AN24	W	WYL-80-1	K20-WYL	D11-WYL		
TH 026 D	W	WYJ-214-1	K20-WYJ	D20-WYJ	49-882	
TH 026 D	W	WYJ-188-1	K20-WYJ	D20-WYJ	49-882	
TH 026 D	W	WYJ-233-1	K20-WYJ	D20-WYJ	49-882	
TH 026 D	W	WYA-11-1	K20-WYA	D20-WYA		
TH 026 D-AA04	W	WYJ-294-1	K20-WYJ	D20-WYJ	49-882	
TH 026 D-AF71	W	WYA-22-1	K20-WYA	D20-WYA		
TH 026 D-AN24	W	WYJ-223-1	K20-WYJ	D20-WYJ	49-882	
TH 026 D-AN24	W	WYJ-202-1	K20-WYJ	D20-WYJ	49-882	
TH 034 D	W	WYJ-256-1	K20-WYJ	D20-WYJ	49-882	
TH 034 D	W	WYA-12-1	K20-WYA	D20-WYA		
TH 034 D-AF71	W	WYA-23-1	K20-WYA	D20-WYA		
TH0 34 D-AE02	W	WYJ-311-1	K20-WYJ	D20-WYJ	49-882	
TH034D	W	WYJ-388-1	K20-WYJ	D20-WYJ	49-882	
TH023D-AF72	W	WYA-25-1	K20-WYA	D20-WYA		
TH023D-AF72	W	WYA-25-1	K20-WYA	D20-WYA		
TH023D-AF74	W	WYJ-352-1	K20-WYJ	D20-WYJ	49-882	
TH034D-AA03	W	WYA-12-1	K20-WYA	D20-WYA		
Komatsu Zenoah (Red Max)						
6300 AVS	Z	C1S-Z1	RB-14	GND-6		49-896
BC 2310	W	WYJ-289-1	K20-WYJ	D20-WYJ	49-882	
BC 2410	W	WYK-129-1	K21-WYK	D21-WYK		
BC 2510	W	WYJ-290-1	K20-WYJ	D20-WYJ	49-882	
BC 254 E	W	WA-105-1	K10-WAT	D10-WAT	49-816	49-812
BC 260 DUH	W	WY-4-1	K10-WY	D10-WY	49-875	49-839
BC 2610	W	WYJ-290-1	K20-WYJ	D20-WYJ	49-882	
BC 2710	W	WYK-130-1	K20-WYJ	D20-WYJ	49-882	
BC 3501 D	W	WYK-155-1	K21-WYK	D20-WYK		
BC24500	Z	C1Q-Z5	RB-72	GND-35		
BC25000	Z	C1Q-Z4	RB-72	GND-35		
BCZ2401	W	WYA-53-1	K20-WYA	D20-WYA		
BCZ2500DL	W	WYA-1-1	K20-WYA	D20-WYA		
BCZ2500S	W	WYA-1-1	K20-WYA	D20-WYA		
BK2650	W	WYE-4-1	XXX	XXX		
BKZ4500	W	WT-795-1	K10-WAT	D10-WAT	49-816	49-812
BKZ4500	W	WT-708-1	K20-WAT	D20-WAT	49-831	49-844
BKZ5000	W	WT-795-1	K10-WAT	D10-WAT	49-816	49-812
C 2 LH	W	HDA-110-1	K20-HDA	D10-HDA	49-845	
CHT600	W	WYL-190-1	K20-WYL	D11-WYL		
D6	W	WYA-24-1	K20-WYA	D20-WYA		
EB 430	W	HDA-80-1	K20-HDA	D10-HDA	49-845	
EB 430	W	HDA-26-1	K12-HDA	D11-HDA		
EB 431	W	WYK-67-1	K21-WYK	D21-WYK		
EB 431	W	HDA-112-1	K12-HDA	D11-HDA		
EB 440	W	HDA-70-1	K20-HDA	D10-HDA	49-845	
EB 4400	W	WYK-132-1	K21-WYK	D21-WYK		
EB 441	W	HDA-149-1	K12-HDA	D11-HDA		
EB 441	W	HDA-113-1	K12-HDA	D11-HDA		
EB 6200	W	WYK-73-1	K21-WYK	D21-WYK		
EB 7000	W	WYK-123-1	K21-WYK	D21-WYK		
EBA 430	W	HDA-89-1	K20-HDA	D10-HDA	49-845	
EBA 431	W	HDA-150-1	K12-HDA	D11-HDA		
EBA 431	W	HDA-139-1	K20-HDA	D10-HDA	49-845	
EBA 440	W	HDA-90-1	K20-HDA	D10-HDA	49-845	
EBA 440	W	HDA-27-1	K20-HDA	D10-HDA	49-845	

OEM ENGINE/UNIT		WALBRO CARBURETOR			OREGON	
Model	Carb	№	Kit	Gaskets	Kit	Gaskets
Komatsu Zenoah (Red Max)						
EBZ4800	W	WYA-42-1	K20-WYA	D20-WYA		
EBZ4800	W	WYA-51-1	K20-WYA	D20-WYA		
EH 025P	W	WYL-148-1	K20-WYL	D11-WYL		
ES 335	W	WT-569-1	K20-WAT	D20-WAT	49-831	49-844
G 1 E	W	WA-180-1	K10-WAT	D10-WAT	49-816	49-812
G 1 E	W	WA-102-1	K10-WAT	D10-WAT	49-816	49-812
G 1 E	W	HDA-33-1	K20-HDA	D10-HDA	49-845	
G 1 KE	W	WA-194-1	K10-WAT	D10-WAT	49-816	49-812
G 1 KE	W	WA-188-1	K10-WAT	D10-WAT	49-816	49-812
G 1 KE	W	HDA-41-1	K20-HDA	D10-HDA	49-845	
G 2 D	W	WYJ-61-1	K20-WYJ	D20-WYJ	49-882	
G 2 D	W	WA-125-1	K10-WAT	D10-WAT	49-816	49-812
G 2 D30D	W	WY-1-1	K10-WY	D10-WY	49-875	49-839
G 2 D30D	W	WY-14-1	K10-WY	D10-WY	49-875	49-839
G 2 D30D	W	WY-63-1	K10-WY	D10-WY	49-875	49-839
G 2 D39	W	HDA-93-1	K20-HDA	D10-HDA	49-845	
G 2 D39	W	WY-16-1	K10-WY	D10-WY	49-875	49-839
G 2 D4	W	HDA-93-1	K20-HDA	D10-HDA	49-845	
G 2 D46	W	HDA-93-1	K20-HDA	D10-HDA	49-845	
G 2 D46	W	WY-23-1	K10-WY	D10-WY	49-875	49-839
G 2 D47D	W	HDA-93-1	K20-HDA	D10-HDA	49-845	
G 2 D5	W	WA-197-1	K10-WAT	D10-WAT	49-816	49-812
G 2 D52	W	WY-39-1	K10-WY	D10-WY	49-875	49-839
G 2 D59D	W	WYJ-65-1	K20-WYJ	D20-WYJ	49-882	
G 2 D59D	W	WA-197-1	K10-WAT	D10-WAT	49-816	49-812
G 2 D8	W	WA-167-1	K10-WAT	D10-WAT	49-816	49-812
G 2 DPU	W	WA-213-1	K10-WAT	D10-WAT	49-816	49-812
G 2 E	W	WA-105-1	K10-WAT	D10-WAT	49-816	49-812
G 2 E	W	WA-177-1	K10-WAT	D10-WAT	49-816	49-812
G 2 E	W	WA-181-1	K10-WAT	D10-WAT	49-816	49-812
G 2 K1D	W	WY-4-1	K10-WY	D10-WY	49-875	49-839
G 2 K30D	W	WY-7-1	K10-WY	D10-WY	49-875	49-839
G 2 KC	W	WY-62-1	K10-WY	D10-WY	49-875	49-839
G 2 KC	W	WY-33-1	K10-WY	D10-WY	49-875	49-839
G 2 KC	W	WY-52-1	K10-WY	D10-WY	49-875	49-839
G 2 KC	W	WYJ-18-1	K20-WYJ	D20-WYJ	49-882	
G 2 KC	W	WYJ-49-1	K20-WYJ	D20-WYJ	49-882	
G 2 KC	W	WYJ-9-1	K20-WYJ	D20-WYJ	49-882	
G 2 KC	W	WYJ-36-1	K20-WYJ	D20-WYJ	49-882	
G 2 KC	W	WYJ-22-1	K20-WYJ	D20-WYJ	49-882	
G 2 KC	W	WYJ-76-1	K20-WYJ	D20-WYJ	49-882	
G 2 KE	W	WA-189-1	K10-WAT	D10-WAT	49-816	49-812
G 2 KE	W	WA-187-1	K10-WAT	D10-WAT	49-816	49-812
G 2 KM	W	WYK-18-1	K21-WYK	D21-WYK		
G 2 KM	W	WYK-2-1	K21-WYK	D21-WYK		
G 22 L	W	WYL-51-1	K20-WYL	D11-WYL		
G 23 L	W	WYJ-110-1	K20-WYJ	D20-WYJ	49-882	
G 23 L	W	WYL-54-1	K20-WYL	D11-WYL		
G 23 L	W	WYL-55-1	K20-WYL	D11-WYL		
G 23 L	W	WYL-57-1	K20-WYL	D11-WYL		
G 23 L	W	WYJ-81-1	K20-WYJ	D20-WYJ	49-882	
G 23 L	W	WYJ-94-1	K20-WYJ	D20-WYJ	49-882	
G 23 L	W	WYL-55-1	K20-WYL	D11-WYL		
G 23 L	W	WYL-57-1	K20-WYL	D11-WYL		
G 23 L1	W	WYJ-113-1	K20-WYJ	D20-WYJ	49-882	
G 23 L2	W	WYJ-89-1	K20-WYJ	D20-WYJ	49-882	
G 23 LH	W	WYJ-80-1	K20-WYJ	D20-WYJ	49-882	
G 23 LH	W	WYL-118-1	K20-WYL	D11-WYL		
G 23 LH18	W	WYJ-121-1	K20-WYJ	D20-WYJ	49-882	
G 23 LH2	W	WYJ-114-1	K20-WYJ	D20-WYJ	49-882	
G 230 PU	W	WT-499-1	K20-WAT	D10-WAT	49-831	49-812
G 230 PU	W	WA-213-1	K10-WAT	D10-WAT	49-816	49-812
G 230 PU	W	WA-167-1	K10-WAT	D10-WAT	49-816	49-812
G 230 PU-M	W	WA-197-1	K10-WAT	D10-WAT	49-816	49-812
G 230 RC	W	WT-603-1	K20-WAT	D10-WAT	49-831	49-812
G 250 AVT	W	WT-481-1	K20-WAT	D10-WAT	49-831	49-812
G 2500TS	W	WT-596-1	K20-WAT	D20-WAT	49-831	49-844
G 26 L	W	WYJ-149-1	K20-WYJ	D20-WYJ	49-882	
G 26 L1	W	WYJ-117-1	K20-WYJ	D20-WYJ	49-882	
G 26 L2	W	WYJ-119-1	K20-WYJ	D20-WYJ	49-882	

CARB = Original OEM Carburetor

B = Bing
N = Nikki
T = Tillotson
TK = Teiki
W = Walbro
Z = Zama

*** No model information available

C

Carburetor Kit Application Chart

OEM ENGINE/UNIT		WALBRO CARBURETOR			OREGON	
Model	Carb	№	Kit	Gaskets	Kit	Gaskets
Komatsu Zenoah (Red Max)						
G 27 LS2	W	WYK-148-1	K21-WYK	D21-WYK		
G 3 C65	W	WY-3-1	K10-WY	D10-WY	49-875	49-839
G 3 K115	W	WYJ-118-1	K20-WYJ	D20-WYJ	49-882	
G 3 K70-D	W	WT-180-1	K10-WAT	D10-WAT	49-816	49-812
G 300	W	WA-179-1	K10-WAT	D10-WAT	49-816	49-812
G 300 AV	W	WT-292-1	K10-WAT	D10-WAT	49-816	49-812
G 300 AVT	W	WT-292-1	K10-WAT	D10-WAT	49-816	49-812
G 300 AVT	W	WA-179-1	K10-WAT	D10-WAT	49-816	49-812
G 310	W	WT-383-1	K10-WAT	D10-WAT	49-816	49-812
G 310 AV	W	WT-278-1	K10-WAT	D10-WAT	49-816	49-812
G 310 AVT	W	WT-278-1	K10-WAT	D10-WAT	49-816	49-812
G 310 TS	W	WT-279-1	K10-WAT	D10-WAT	49-816	49-812
G 310 TS	W	WT-487-1	K20-WAT	D10-WAT	49-831	49-812
G 32 AV	W	WA-192-1	K10-WAT	D10-WAT	49-816	49-812
G 32 AV	W	WA-112-1	K10-WAT	D10-WAT	49-816	49-812
G 32 AV	W	WA-174-1	K10-WAT	D10-WAT	49-816	49-812
G 330	W	WT-428-1	K20-WAT	D10-WAT	49-831	49-812
G 34 L	W	WYK-94-1	K21-WYK	D21-WYK		
G 34 L1-D	W	WYJ-218-1	K20-WYJ	D20-WYJ	49-882	
G 34 L-D	W	WYK-94-1	K21-WYK	D21-WYK		
G 340 AV2	W	WT-290-1	K20-WAT	D10-WAT	49-831	49-812
G 340 AVS	W	WT-249-1	K20-WAT	D10-WAT	49-831	49-812
G 3500	W	WT-588-1	K20-WAT	D10-WAT	49-831	49-812
G 361 AV	W	WA-64-1	K10-WAT	D10-WAT	49-816	49-812
G 365 AV	W	WA-64-1	K10-WAT	D10-WAT	49-816	49-812
G 370 AV	W	WT-246-1	K20-WAT	D10-WAT	49-831	49-812
G 370 AV3	W	WT-291-1	K20-WAT	D10-WAT	49-831	49-812
G 38 AV	W	WA-193-1	K10-WAT	D10-WAT	49-816	49-812
G 38 AV	W	WA-173-1	K10-WAT	D10-WAT	49-816	49-812
G 38 AV	W	WA-113-1	K10-WAT	D10-WAT	49-816	49-812
G 380 PU	W	WT-338-1	K20-WAT	D10-WAT	49-831	49-812
G 3800	W	WT-576-1	K26-WAT	D26-WAT		
G 3800 AVS-1	W	WT-591-1	K20-WAT	D10-WAT	49-831	49-812
G 4 K60-D	W	WYK-4-1	K21-WYK	D21-WYK		
G 4 K69	W	WYK-63-1	K21-WYK	D21-WYK		
G 4 K84 D	W	WYK-4-1	K21-WYK	D21-WYK		
G 4 K84 D	W	HDA-104-1	K20-HDA	D10-HDA	49-845	
G 4 K92 D	W	HDA-62-1	K12-HDA	D11-HDA		
G 4 KEB431	W	HDA-136-1	K20-HDA	D10-HDA	49-845	
G 4 KEB441	W	HDA-135-1	K20-HDA	D10-HDA	49-845	
G 40 AV	W	WA-97-1	K10-WAT	D10-WAT	49-816	49-812
G 400 AVS	W	WT-126-1	K20-WAT	D10-WAT	49-831	49-812
G 400 AVS-1	W	WT-125-1	K20-WAT	D10-WAT	49-831	49-812
G 401 AV	W	WA-136-1	K10-WAT	D10-WAT	49-816	49-812
G 405 AV	W	WA-139-1	K10-WAT	D10-WAT	49-816	49-812
G 410	W	WT-147-1	K10-WAT	D10-WAT	49-816	49-812
G 410 AVS	W	WT-172-1	K20-WAT	D10-WAT	49-831	49-812
G 410 AVS	W	WT-228-1	K20-WAT	D10-WAT	49-831	49-812
G 410 AVS-1	W	WT-296-1	K20-WAT	D20-WAT	49-831	49-844
G 410 AVS-2	W	WT-294-1	K22-WAT	D22-WAT		
G 415	W	WT-533-1	K20-WAT	D10-WAT	49-831	49-812
G 415	W	WT-246-1	K20-WAT	D10-WAT	49-831	49-812
G 415	W	WT-509-1	K20-WAT	D10-WAT	49-831	49-812
G 4200	W	WT-614-1	K20-WAT	D10-WAT	49-831	49-812
G 43 L	W	WYK-93-1	K21-WYK	D13-WYK		
G 43 L	W	WYJ-236-1	K20-WYJ	D20-WYJ	49-882	
G 43 L1-D	W	WYJ-219-1	K20-WYJ	D20-WYJ	49-882	
G 43 L-D	W	WYK-93-1	K21-WYK	D13-WYK		
G 43 L-D	W	WYJ-242-1	K20-WYJ	D20-WYJ	49-882	
G 450 AVS	W	WT-114-1	K10-WAT	D10-WAT	49-816	49-812
G 450 AVS-1	W	WT-116-1	K20-WAT	D10-WAT	49-831	49-812
G 451 AVS	W	WT-171-1	K20-WAT	D10-WAT	49-831	49-812
G 451 AVS	W	WT-228-1	K20-WAT	D10-WAT	49-831	49-812
G 455	W	WT-208-1	K20-WAT	D10-WAT	49-831	49-812
G 455 AVS	W	WT-555-1	K20-WAT	D10-WAT	49-831	49-812
G 455 AVS-1	W	WT-296-1	K20-WAT	D20-WAT	49-831	49-844
G 455 AVS-2	W	WT-295-1	K22-WAT	D22-WAT		
G 4K60D	W	WYK-33-1	K21-WYK	D21-WYK		
G 5 K7D	W	WYK-23-1	K21-WYK	D21-WYK		
G 5 K7D	W	WYK-36-1	K21-WYK	D21-WYK		
G 50 AV	W	WA-103-1	K10-WAT	D10-WAT	49-816	49-812
G 500	W	WT-315-1	K20-WAT	D20-WAT	49-831	49-844
G 500	W	WT-281-1	K20-WAT	D10-WAT	49-831	49-812
G 540	W	HDA-118-1	K20-HDA	D10-HDA	49-845	
G 540	W	HDA-118-1	K20-HDA	D10-HDA	49-845	
G 540	W	HDA-55-1	K20-HDA	D10-HDA	49-845	
G 560	W	HDA-118-1	K20-HDA	D10-HDA	49-845	
G 560	W	HDA-118-1	K20-HDA	D10-HDA	49-845	
G 561	W	HDA-42-1	K20-HDA	D10-HDA	49-845	
G 620	W	HDA-67-1	K20-HDA	D10-HDA	49-845	
G 620 AVS-3	W	HDA-92-1	K20-HDA	D10-HDA	49-845	
G 620 PU	W	HDA-48-1	K20-HDA	D10-HDA	49-845	
G 621 AVS	W	HDA-116-1	K20-HDA	D10-HDA	49-845	
G 621 AVS	W	HDA-93-1	K20-HDA	D10-HDA	49-845	
G 621 AVS-1	W	HDA-93-1	K20-HDA	D10-HDA	49-845	
G 621 AVS-4	W	HDA-93-1	K20-HDA	D10-HDA	49-845	
G 740 BPU	W	WJ-64-1	K11-WJ	D11-WJ		
G2500EZ	W	WT-756-1	K20-WAT	D20-WAT	49-831	49-844
G2500EZ	W	WT-756-1	K20-WAT	D20-WAT	49-831	49-844
G26LS	W	WYJ-409-1	K20-WYJ	D20-WYJ	49-882	
G26LS10	W	WYJ-378-1	K20-WYJ	D20-WYJ	49-882	
G26LS51	W	WYJ-343-1	K20-WYJ	D20-WYJ	49-882	
G34L-D	W	WYJ-319-1	K20-WYJ	D20-WYJ	49-882	
G415	W	WT-753-1	K20-WAT	D20-WAT	49-831	49-844
G455	W	WT-754-1	K20-WAT	D20-WAT	49-831	49-844
G4LS24-D	W	WYK-166-1	K21-WYK	D21-WYK		
G4LS24-D	W	WYK-166-1	K21-WYK	D21-WYK		
G500	W	WT-755-1	K20-WAT	D20-WAT	49-831	49-844
G5000KAZ	W	WT-666-1	K20-WAT	D10-WAT	49-831	49-812
GE 2 KC	W	WY-52-1	K10-WY	D10-WY	49-875	49-839
GE2KC10	W	WYE-1-1	XXX	XXX		
GZ 23N	W	WYA-29-1	K20-WYA	D20-WYA		
GZ 25 N	W	WYA-1-1	K20-WYA	D20-WYA		
GZ 25 N	W	WYA-32-1	K20-WYA	D20-WYA		
GZ 25 N-10	W	WYA-2-1	K20-WYA	D20-WYA		
GZ 25 N-15	W	WYA-26-1	K20-WYA	D20-WYA		
GZ 25 N-15	W	WYA-26-1	K20-WYA	D20-WYA		
GZ 25 N-3	W	WYA-4-1	K20-WYA	D20-WYA		
GZ 25 N-6	W	WYA-3-1	K20-WYA	D20-WYA		
GZ30N8	W	WYA-54-1	K20-WYA	D20-WYA		
GZ30N8	W	WYA-36-1	K20-WYA	D20-WYA		
GZ4000	Z	C1Q-Z6	RB-120	GND-27		49-909
GZ65N	W	WYA-56-1	K20-WYA	D20-WYA		
HB 260	W	WT-184-1	K10-WAT	D10-WAT	49-816	49-812
HB 260	W	WT-279-1	K10-WAT	D10-WAT	49-816	49-812
HB 260 B-50	W	WA-185-1	K10-WAT	D10-WAT	49-816	49-812
HB 260 C-50	W	WA-185-1	K10-WAT	D10-WAT	49-816	49-812
HC 405 AV	W	WA-184-1	K10-WAT	D10-WAT	49-816	49-812
HC 500	W	WT-475-1	K20-WAT	D20-WAT	49-831	49-844
HC 51 OD	W	WT-512-1	K20-WAT	D20-WAT	49-831	49-844
ht750	W	WYL-190-1	K20-WYL	D11-WYL		
MD 430	W	HDA-26-1	K12-HDA	D11-HDA		
MD 431	W	HDA-112-1	K12-HDA	D11-HDA		
RC 620	W	HDA-96-1	K22-HDA	D22-HDA	49-853	49-852
TR 200	W	WYL-123-1	K20-WYL	D11-WYL		
XC 13	W	WT-481-1	K20-WAT	D10-WAT	49-831	49-812
XD7	W	WYA-44-1	K20-WYA	D20-WYA		
XE 14	W	WY-33-1	K10-WY	D10-WY	49-875	49-839
XE 32	W	WYL-157-1	K20-WYL	D11-WYL		
XE41	W	WT-729-1	K20-WAT	D20-WAT	49-831	49-844
Lawn Boy						
61620	Z	C1U-P10	RB-29	GND-18	49-285	
61638	Z	C1U-P10	RB-29	GND-18	49-285	
61653	Z	C1U-P11	RB-29	GND-18	49-285	
61653	Z	C1U-P11	RB-29	GND-18	49-285	
F-SERIES	W	LMR-13-1	K11-LMR			
F-SERIES	W	LMR-11-1	K11-LMR			
F-SERIES	W	LMR-1-1	K11-LMR			
F-SERIES	W	LMR-10-1	K11-LMR			
F-SERIES	W	LMR-12-1	K11-LMR			
F-SERIES	W	LMR-14-1	K11-LMR			
F-SERIES	W	LMR-15-1	K11-LMR			
F-SERIES	W	LMR-2-1	K11-LMR			
F-SERIES	W	LMR-3-1	K11-LMR			
F-SERIES	W	LMR-4-1	K11-LMR			
F-SERIES	W	LMR-9-1	K11-LMR			
TC 21 TA	W	WT-14-1	K20-WAT	D10-WAT	49-831	49-812

CARB = Original OEM Carburetor

B = Bing
N = Nikki
T = Tillotson
TK = Teiki
W = Walbro
Z = Zama

*** No model information available

C

Carburetor Kit Application Chart

OEM ENGINE/UNIT		WALBRO CARBURETOR			OREGON	
Model	Carb	№	Kit	Gaskets	Kit	Gaskets
Lesco						
H.T./EDGER/S.T./B.C.	Z	C1U-SK12	RB-26	GND-17	49-284	49-880
LBB4200	Z	C1M-K24	RB-44	GND-31	49-903	
LBH2500	Z	C1U-SK13	RB-26	GND-17	49-284	49-880
LHB2	Z	C1U-K26	RB-52	GND-18		
LHD1700	Z	C1U-K27	RB-23	GND-12	49-283	49-851
LHE2475	Z	C1U-K23A-B	RB-27	GND-17	49-897	49-880
LHS3050	Z	C1U-K31	RB-26	GND-17	49-284	49-880
LHS4050	Z	C1U-K31	RB-26	GND-17	49-284	49-880
LST2100	Z	C1U-K16	RB-21	GND-18	49-822-0	
LST24S01	Z	C1U-K23	RB-27	GND-17	49-897	49-880
S.T./B.C.	Z	C1Q-SK9	RB-68	GND-17		49-880
Lombard Chainsaw						
Unspecified	W	SDC-40-1	K10-SDC	D10-SDC	49-834	49-810
Unspecified	W	SDC-41-1	K10-SDC	D10-SDC	49-834	49-810
Makita (See Dolmar)						
Maruyama						
120 L	W	WYJ-93-1	K20-WYJ	D20-WYJ	49-882	
AE 200	W	WYK-9-1	K20-WYK	D20-WYK		
AE 200	W	WYL-38-1	K20-WYL	D11-WYL		
AE 200	W	WYJ-78-1	K20-WYJ	D20-WYJ	49-882	
AE 230	W	WYL-48-1	K20-WYL	D11-WYL		
AE 230	W	WYJ-184-1	K20-WYJ	D20-WYJ	49-882	
AE 230	W	WYJ-182-1	K20-WYJ	D20-WYJ	49-882	
AE 260	W	WYJ-240-1	K20-WYJ	D20-WYJ	49-882	
AE 260	W	WYJ-70-1	K20-WYJ	D20-WYJ	49-882	
AE 260	W	WYJ-153-1	K20-WYJ	D20-WYJ	49-882	
AE 260	W	WYJ-170-1	K20-WYJ	D20-WYJ	49-882	
AE 260 F	W	WYF-6-1	K10-WYF	D10-WYF		
AE 320	W	WYJ-71-1	K20-WYJ	D20-WYJ	49-882	
AE 320	W	WYJ-154-1	K20-WYJ	D20-WYJ	49-882	
AE 320	W	WYJ-171-1	K20-WYJ	D20-WYJ	49-882	
AE 320	W	WYK-11-1	K20-WYK	D20-WYK		
AE 320	W	WYJ-120-1	K20-WYJ	D20-WYJ	49-882	
AE 320	W	WYJ-235-1	K20-WYJ	D20-WYJ	49-882	
AE 320	W	WYK-115-1	K21-WYK	D21-WYK		
AE 320	W	WYJ-286-1	K20-WYJ	D20-WYJ	49-882	
AE 320	W	WYJ-69-1	K20-WYJ	D20-WYJ	49-882	
AE 320	W	WYJ-129-1	K20-WYJ	D20-WYJ	49-882	
AE 320 F	W	WYF-6-1	K10-WYF	D10-WYF		
AE 320F	W	WYF-9-1	K10-WYF	D10-WYF		
AE 420	W	WYK-59-1	K20-WYK	D20-WYK		
AE 420	W	WYJ-105-1	K20-WYJ	D20-WYJ	49-882	
AE 420	W	WYJ-72-1	K20-WYJ	D20-WYJ	49-882	
AE 420	W	WYJ-73-1	K20-WYJ	D20-WYJ	49-882	
AE 420	W	WYJ-75-1	K20-WYJ	D20-WYJ	49-882	
AE 420	W	WYK-114-1	K20-WYK	D20-WYK		
AE 49	W	WYL-38-1	K20-WYL	D11-WYL		
AE 500	W	WYK-114-1	K20-WYK	D20-WYK		
AE 69	W	WYJ-120-1	K20-WYJ	D20-WYJ	49-882	
AE 98	W	WYJ-286-1	K20-WYJ	D20-WYJ	49-882	
AE320T	W	WYE-2-1	XXX	XXX		
BC 260/H	W	WYK-10-1	K20-WYK	D20-WYK		
BC 320/H	W	WYK-10-1	K20-WYK	D20-WYK		
BC 420/H	W	WYJ-105-1	K20-WYJ	D20-WYJ	49-882	
BC 420/H	W	WYK-31-1	K20-WYK	D20-WYK		
BE 01	W	WYL-90-1	K20-WYL	D11-WYL		
BE 01	W	WYJ-278-1	K20-WYJ	D20-WYJ	49-882	
BE 13	W	WYL-109-1	K20-WYL	D11-WYL		
BE 200	W	WYL-145-1	K20-WYL	D11-WYL		
BE 201	W	WYL-145-1	K20-WYL	D11-WYL		
BE 230	W	WYL-90-1	K20-WYL	D11-WYL		
BE 230	W	WYJ-238-1	K20-WYJ	D20-WYJ	49-882	
BE 230	W	WYL-109-1	K20-WYL	D11-WYL		
BE 230 D	W	WYK-108-1	K21-WYK	D21-WYK		
BE 230 EJ	W	WYK-110-1	K21-WYK	D21-WYK		
BE 230 P	W	WYJ-291-1	K20-WYJ	D20-WYJ	49-882	
BE 230 P	W	WYJ-278-1	K20-WYJ	D20-WYJ	49-882	
BE200P	W	WYL-213-1	K20-WYL	D11-WYL		
BE200P/01	W	WYL-168-1	K20-WYL	D11-WYL		
BE230	W	WYK-160-1	K21-WYK	D21-WYK		
BE230P	W	WYJ-291-1	K20-WYJ	D20-WYJ	49-882	
BL-2600	Z	C1U-SK13	RB-26	GND-17	49-284	49-880
BL-2I2	Z	C1U-M21	RB-20	GND-12	49-864	49-851
CE 02	W	WYL-154-1	K20-WYL	D11-WYL		
CE 02	W	WYL-158-1	K20-WYL	D11-WYL		

OEM ENGINE/UNIT		WALBRO CARBURETOR			OREGON	
Model	Carb	№	Kit	Gaskets	Kit	Gaskets
Maruyama						
CE 230	W	WYJ-274-1	K20-WYJ	D20-WYJ	49-882	
CE 230	W	WYL-154-1	K20-WYL	D11-WYL		
CE 230	W	WYL-158-1	K20-WYL	D11-WYL		
CE 260	W	WYJ-281-1	K20-WYJ	D20-WYJ	49-882	
CE230	W	WYJ-414-1	K20-WYJ	D20-WYJ	49-882	
CE300	W	WYJ-324-1	K20-WYJ	D20-WYJ	49-882	
DE210	W	WYK-222-1	K21-WYK	D21-WYK		
ED 260	W	WYK-35-1	K20-WYK	D20-WYK		
EE200/06	W	WYL-224-1	K20-WYL	D11-WYL		
EX 4-2	W	WYK-31-1	K20-WYK	D20-WYK		
LE 01	W	WYJ-135-1	K20-WYJ	D20-WYJ	49-882	
LE 02	W	WYJ-135-1	K20-WYJ	D20-WYJ	49-882	
LE 11	W	WYJ-134-1	K20-WYJ	D20-WYJ	49-882	
LE 14	W	WYL-34-1	K20-WYL	D11-WYL		
LE 230	W	WYK-46-1	K21-WYK	D21-WYK		
LE 230	W	WYL-29-1	K20-WYL	D11-WYL		
LE 230	W	WYL-31-1	K20-WYL	D11-WYL		
LE 230	W	WYL-35-1	K20-WYL	D11-WYL		
LE 230	W	WYL-59-1	K20-WYL	D11-WYL		
LE 230	W	WYL-119-1	K20-WYL	D11-WYL		
LE 230	W	WYL-50-1	K20-WYL	D11-WYL		
LE 230	W	WYL-28-1	K20-WYL	D11-WYL		
LE 230	W	WYL-60-1	K20-WYL	D11-WYL		
LE 230	W	WYL-43-1	K20-WYL	D11-WYL		
LE 230	W	WYL-34-1	K20-WYL	D11-WYL		
LE 230	W	WYL-143-1	K20-WYL	D11-WYL		
LE 230	W	WYL-44-1	K20-WYL	D11-WYL		
LE 230	W	WYL-61-1	K20-WYL	D11-WYL		
LE 230	W	WYL-33-1	K20-WYL	D11-WYL		
LE 230	W	WYJ-134-1	K20-WYJ	D20-WYJ	49-882	
LE 260	W	WYJ-145-1	K20-WYJ	D20-WYJ	49-882	
LE 260	W	WYJ-253-1	K20-WYJ	D20-WYJ	49-882	
LE 260	W	WYK-75-1	K21-WYK	D21-WYK		
LE 260	W	WYJ-173-1	K20-WYJ	D20-WYJ	49-882	
LE 260	W	WYJ-135-1	K20-WYJ	D20-WYJ	49-882	
LE 260D	W	WYK-151-1	K21-WYK	D21-WYK		
LE 260D	W	WYK-105-1	K21-WYK	D21-WYK		
LE 300	W	WYJ-146-1	K20-WYJ	D20-WYJ	49-882	
LE 300	W	WYJ-137-1	K20-WYJ	D20-WYJ	49-882	
LE 320	W	WYK-92-1	K21-WYK	D13-WYK		
LE 320	W	WYJ-198-1	K20-WYJ	D20-WYJ	49-882	
LE 320D	W	WYK-109-1	K21-WYK	D21-WYK		
M 45 F	W	WYJ-75-1	K20-WYJ	D20-WYJ	49-882	
MB 200	W	WYJ-52-1	K20-WYJ	D20-WYJ	49-882	
MB 2300	W	WYJ-84-1	K20-WYJ	D20-WYJ	49-882	
MB 260	W	WYJ-53-1	K20-WYJ	D20-WYJ	49-882	
MB 320	W	WYJ-54-1	K20-WYJ	D20-WYJ	49-882	
MBS 200	W	WYK-9-1	K20-WYK	D20-WYK		
MBS 260	W	WYK-10-1	K20-WYK	D20-WYK		
MBS 320	W	WYK-11-1	K20-WYK	D20-WYK		
MKF 330	W	WYJ-69-1	K20-WYJ	D20-WYJ	49-882	
MS 056	W	WYJ-68-1	K20-WYJ	D20-WYJ	49-882	
MS059	W	WYJ-415-1	K20-WYJ	D20-WYJ	49-882	
NE420	W	WYK-252-1	K21-WYK	D21-WYK		
McCulloch						
210	W	SDC-18-1	K10-SDC	D10-SDC	49-834	49-810
380	W	WT-55-1	K10-WAT	D10-WAT	49-816	49-812
510	W	SDC-44-1	K10-SDC	D10-SDC	49-834	49-810
710	W	SDC-18-1	K10-SDC	D10-SDC	49-834	49-810
730	W	WT-113-1	K10-WAT	D10-WAT	49-816	49-812
735	W	WT-130-1	K10-WAT	D10-WAT	49-816	49-812
39123	W	SDC-2-1	K10-SDC	D10-SDC	49-834	49-810
39123	W	SDC-3-1	K10-SDC	D10-SDC	49-834	49-810
39123	W	SDC-3-1	K10-SDC	D10-SDC	49-834	49-810
39151	W	SDC-2-1	K10-SDC	D10-SDC	49-834	49-810
39151	W	SDC-3-1	K10-SDC	D10-SDC	49-834	49-810
39151	W	SDC-3-1	K10-SDC	D10-SDC	49-834	49-810
39243	W	SDC-2-1	K10-SDC	D10-SDC	49-834	49-810

CARB = Original OEM Carburetor

B = Bing
N = Nikki
T = Tillotson
TK = Teiki
W = Walbro
Z = Zama

*** No model information available

C

Carburetor Kit Application Chart

OEM ENGINE/UNIT		WALBRO CARBURETOR			OREGON	
Model	Carb	№	Kit	Gaskets	Kit	Gaskets
McCulloch						
39243	W	SDC-3-1	K10-SDC	D10-SDC	49-834	49-810
39243	W	SDC-3-1	K10-SDC	D10-SDC	49-834	49-810
39273	W	SDC-44-1	K10-SDC	D10-SDC	49-834	49-810
39365	W	SDC-37-1	K10-SDC	D10-SDC	49-834	49-810
10-10 A	W	SDC-37-1	K10-SDC	D10-SDC	49-834	49-810
10-10 A	W	SDC-44-1	K10-SDC	D10-SDC	49-834	49-810
210 AV	W	SDC-18-1	K10-SDC	D10-SDC	49-834	49-810
25 cc	W	WT-566-1	K20-WAT	D20-WAT	49-831	49-844
28 cc	W	WT-231-1	K10-WAT	D10-WAT	49-816	49-812
28 cc	W	WT-312-1	K10-WAT	D10-WAT	49-816	49-812
28/32CC BLOWER	Z	C1U-M35	RB-29	GND-12	49-285	49-851
28/32CC trimmer	Z	C1U-M29	RB-48	GND-18		
28/32CC trimmer	Z	C1U-M29	RB-48	GND-18		
30 cc	W	WYJ-183-1	K20-WYJ	D20-WYJ	49-882	
32 cc	W	WT-231-1	K10-WAT	D10-WAT	49-816	49-812
32 cc	W	WT-312-1	K10-WAT	D10-WAT	49-816	49-812
32 cc	W	WT-258-1	K10-WAT	D10-WAT	49-816	49-812
32 cc	W	WT-347-1	K10-WAT	D10-WAT	49-816	49-812
32 cc	W	WT-437-1	K10-WAT	D10-WAT	49-816	49-812
32CCchainSAW	Z	C1Q-M27	RB-39	GND-35	49-902	
32CCchainSAW	Z	C1Q-M27	RB-39	GND-35	49-902	
32CCST/BC	Z	C1U-M37	RB-48	GND-18		
35 cc	W	WYJ-183-1	K20-WYJ	D20-WYJ	49-882	
35 cc	W	WT-438-1	K10-WAT	D10-WAT	49-816	49-812
35 cc	W	WT-258-1	K10-WAT	D10-WAT	49-816	49-812
35 cc	W	WT-348-1	K10-WAT	D10-WAT	49-816	49-812
35CC chainSAW	Z	C1Q-M28	RB-39	GND-35	49-902	
35CC chainSAW	Z	C1Q-M28	RB-39	GND-35	49-902	
38 cc	W	WYJ-183-1	K20-WYJ	D20-WYJ	49-882	
38 cc	W	WT-349-1	K10-WAT	D10-WAT	49-816	49-812
38CC chainSAW	Z	C1Q-M36	RB-39	GND-35	49-902	
38CCchainSAW	Z	C1Q-M33	RB-39	GND-35	49-902	
38CCchainSAW	Z	C1Q-M33	RB-39	GND-35	49-902	
40 cc	W	WYJ-183-1	K20-WYJ	D20-WYJ	49-882	
5-10 A	W	SDC-2-1	K10-SDC	D10-SDC	49-834	49-810
5-10 A	W	SDC-3-1	K10-SDC	D10-SDC	49-834	49-810
5-10 A	W	SDC-3-1	K10-SDC	D10-SDC	49-834	49-810
610 AV	W	SDC-18-1	K10-SDC	D10-SDC	49-834	49-810
7-10 A	W	SDC-44-1	K10-SDC	D10-SDC	49-834	49-810
7-10 A	W	SDC-58-1	K10-SDC	D10-SDC	49-834	49-810
BLOWER	Z	C1S-M13	RB-10	GND-32	49-862	49-858
BLOWER/VAC	Z	C1S-M12	RB-10	GND-32	49-862	49-858
CABRIO 35 & 38	W	WT-694-1	K20-WAT	D20-WAT	49-831	49-844
CP 55	W	SDC-37-1	K10-SDC	D10-SDC	49-834	49-810
CP 80	W	SDC-38-1	K10-SDC	D10-SDC	49-834	49-810
Double Eagle 50	W	HDA-36-1	K20-HDA	D10-HDA	49-845	
Double Eagle 50	W	HDA-46-1	K20-HDA	D10-HDA	49-845	
Double Eagle 50	W	HDA-66-1	K20-HDA	D10-HDA	49-845	
Double Eagle 80	W	SDC-85-1	K10-SDC	D10-SDC	49-834	49-810
FS55	W	WT-758-1	K10-WAT	D10-WAT	49-816	49-812
HEDGEtrimmer	Z	C1U-M32	RB-29	GND-12	49-285	49-851
M 25	W	WT-547-1	K20-WAT	D10-WAT	49-831	49-812
M 25	W	WT-547-1	K20-WAT	D10-WAT	49-831	49-812
MAC 30 A	W	WT-102-1	K10-WAT	D10-WAT	49-816	49-812
MAC 35	W	WT-388-1	K20-WAT	D10-WAT	49-831	49-812
MAC 35	W	WT-414-1	K20-WAT	D10-WAT	49-831	49-812
MAC 40	W	WT-414-1	K20-WAT	D10-WAT	49-831	49-812
MAC 40	W	WT-388-1	K20-WAT	D10-WAT	49-831	49-812
MAC 46	W	WT-414-1	K20-WAT	D10-WAT	49-831	49-812
MAC 46	W	WT-388-1	K20-WAT	D10-WAT	49-831	49-812
MAC 511	W	WJ-11-1	K11-WJ	D11-WJ		
MAC 60	Z	C1U-M16	RB-28	GND-18	49-866	
MAC 60	Z	C1U-M20	RB-28	GND-18	49-866	
MAC 60	W	WT-92-1	K22-WAT	D22-WAT		
MAC 60	W	WA-146-1	K10-WAT	D10-WAT	49-816	49-812
MAC 60 SX	W	WT-211-1	K20-WAT	D20-WAT	49-831	49-844
MAC 60 X SX	W	WT-132-1	K20-WAT	D20-WAT	49-831	49-844
MAC 60A	Z	C1S-M8	RB-10	GND-32	49-862	49-858
MAC 611	W	WJ-11-1	K11-WJ	D11-WJ		
MAC 65	W	WT-210-1	K10-WAT	D10-WAT	49-816	49-812
MAC 65	W	WT-237-1	K10-WAT	D10-WAT	49-816	49-812
MAC 65	W	WT-238-1	K20-WAT	D20-WAT	49-831	49-844
MAC 65	W	WT-345-1	K10-WAT	D10-WAT	49-816	49-812
MAC 65	W	WT-346-1	K20-WAT	D11-WAT	49-831	
MAC 65	W	WT-354-1	K20-WAT	D20-WAT	49-831	49-844
MAC 65	W	WT-211-1	K20-WAT	D20-WAT	49-831	49-844
MAC 65	W	WT-436-1	K20-WAT	D20-WAT	49-831	49-844
MAC 65	W	WT-441-1	K20-WAT	D10-WAT	49-831	49-812
MAC 710	W	WJ-11-1	K11-WJ	D11-WJ		
MAC 80	Z	C1U-M16	RB-28	GND-18	49-866	
MAC 80	Z	C1U-M20	RB-28	GND-18	49-866	
MAC 80	W	WA-146-1	K10-WAT	D10-WAT	49-816	49-812
MAC 80A	Z	C1S-M8	RB-10	GND-32	49-862	49-858
MAC 85	W	WT-37-1	K10-WAT	D10-WAT	49-816	49-812
MAC 85	W	WT-91-1	K22-WAT	D22-WAT		
MAC 85	W	WT-100-1	K20-WAT	D20-WAT	49-831	49-844
MAC 950	W	WJ-11-1	K11-WJ	D11-WJ		
MAC 960	W	WJ-11-1	K11-WJ	D11-WJ		
MAC 970	W	WJ-11-1	K11-WJ	D11-WJ		
MD 3000	W	WT-255-1	K10-WAT	D10-WAT	49-816	49-812
MD 3000	W	WT-445-1	K10-WAT	D10-WAT	49-816	49-812
MD 3800	W	WT-445-1	K10-WAT	D10-WAT	49-816	49-812
MD 3800	W	WT-255-1	K10-WAT	D10-WAT	49-816	49-812
MD 3800	W	WT-255-1	K10-WAT	D10-WAT	49-816	49-812
MD 4000	W	WT-445-1	K10-WAT	D10-WAT	49-816	49-812
MD 4600	W	WYJ-208-1	K20-WYJ	D20-WYJ	49-882	
MS 55	W	WJ-82-1	K10-WJ	D10-WJ	49-873	49-843
MS 60	W	WJ-82-1	K10-WJ	D10-WJ	49-873	49-843
PHT	W	WYL-176-1	K20-WYL	D11-WYL		
PM 370	T	HU-57B	RK-14HU	DG-3HU	49-805	49-804
PM 490	T	HU-58B	RK-14HU	DG-3HU	49-805	49-804
PM-300	Z	C1-M2	RB-1	GND-1	49-861	49-854
PM-510	Z	C1-17-01	RB-1	GND-1	49-861	49-854
PM-610	Z	C1-17-02	RB-1	GND-1	49-861	49-854
PM-800	Z	C2-M3A	RB-15	GND-8	49-836-0	49-860
PM-800	Z	C2S-19-01	RB-18	GND-10		
PM-850	Z	C2-M3A	RB-15	GND-8	49-836-0	49-860
PM-850	Z	C2S-19-01	RB-18	GND-10		
Power MAC 555	W	SDC-44-1	K10-SDC	D10-SDC	49-834	49-810
Power MAC 570	W	SDC-38-1	K10-SDC	D10-SDC	49-834	49-810
Power MAC 655	W	HDB-7-1	K10-HDB	D10-HDB	49-832	49-806
Power MAC 850	W	SDC-38-1	K10-SDC	D10-SDC	49-834	49-810
PRO 1010-A	W	SDC-65-1	K10-SDC	D10-SDC	49-834	49-810
Pro MAC 10 10A	W	SDC-58-1	K10-SDC	D10-SDC	49-834	49-810
Pro MAC 300	W	WA-52-1	K10-WAT	D10-WAT	49-816	49-812
Pro MAC 38 AV	W	WT-102-1	K10-WAT	D10-WAT	49-816	49-812
Pro MAC 40	W	WT-453-1	K10-WAT	D10-WAT	49-816	49-812
Pro MAC 46	W	WT-453-1	K10-WAT	D10-WAT	49-816	49-812
Pro MAC 55	W	SDC-49-1	K10-WAT	D10-WAT	49-816	49-812
Pro MAC 55	W	SDC-43-1	K10-SDC	D10-SDC	49-834	49-810
Pro MAC 55	W	SDC-58-1	K10-SDC	D10-SDC	49-834	49-810
Pro MAC 60	W	SDC-44-1	K10-SDC	D10-SDC	49-834	49-810
Pro MAC 60	W	SDC-49-1	K10-WAT	D10-WAT	49-816	49-812
Pro MAC 60	W	SDC-58-1	K10-SDC	D10-SDC	49-834	49-810
Pro MAC 610	W	HDB-1-1	K10-HDB	D10-HDB	49-832	49-806
Pro MAC 610	W	HDB-4-1	K10-HDB	D10-HDB	49-832	49-806
Pro MAC 610	W	HDB-6-1	K10-HDB	D10-HDB	49-832	49-806
Pro MAC 650	W	HDB-2-1	K10-HDB	D10-HDB	49-832	49-806
PRO PUMP	Z	C1S-M9	RB-10	GND-32	49-862	49-858
Quattro	W	WYJ-327-1	K20-WYJ	D20-WYJ	49-882	
SP81	Z	C2-M3A	RB-15	GND-8	49-836-0	49-860
SP81	Z	C2S-19-01	RB-18	GND-10		
STRATO	W	WT-750-1	K10-WAT	D10-WAT	49-816	49-812
Super 10-10	W	SDC-16-1	K10-SDC	D10-SDC	49-834	49-810
Super 710	W	SDC-18-1	K10-SDC	D10-SDC	49-834	49-810
Super Pro 60	W	SDC-50-1	K10-SDC	D10-SDC	49-834	49-810
Super Pro 60	W	SDC-58-1	K10-SDC	D10-SDC	49-834	49-810
Super Pro 70	W	SDC-38-1	K10-SDC	D10-SDC	49-834	49-810
Super Pro 81	W	SDC-38-1	K10-SDC	D10-SDC	49-834	49-810
Super Pro 81	W	SDC-51-1	K10-SDC	D10-SDC	49-834	49-810
Super Pro 81X	W	SDC-58-1	K10-SDC	D10-SDC	49-834	49-810
Super XLAO	W	SDC-88-1	K10-SDC	D10-SDC	49-834	49-810
Titan 50	W	HDA-66-1	K20-HDA	D10-HDA	49-845	
Titan 50	W	HDA-77-1	K20-HDA	D10-HDA	49-845	
Titan 51	W	WJ-82-1	K10-WJ	D10-WJ	49-873	49-843
Titan 51	W	WJ-45-1	K10-WJ	D10-WJ	49-873	49-843
Titan 55	W	WJ-45-1	K10-WJ	D10-WJ	49-873	49-843
Titan 55	W	WJ-82-1	K10-WJ	D10-WJ	49-873	49-843
Titan 57 cc	W	HDA-77-1	K20-HDA	D10-HDA	49-845	
Titan 60	W	WJ-45-1	K10-WJ	D10-WJ	49-873	49-843

CARB = Original OEM Carburetor

B = Bing
N = Nikki
T = Tillotson
TK = Teiki
W = Walbro
Z = Zama

*** No model information available

C

Carburetor Kit Application Chart

OEM ENGINE/UNIT		WALBRO CARBURETOR			OREGON	
Model	Carb	№	Kit	Gaskets	Kit	Gaskets
McCulloch						
Titan 60	W	WJ-82-1	K10-WJ	D10-WJ	49-873	49-843
Titan 70	W	WJ-23-1	K11-WJ	D11-WJ		
Unspecified	W	WT-163-1	K20-WAT	D20-WAT	49-831	49-844
Unspecified	W	WT-90-1	K22-WAT	D22-WAT		
Unspecified	W	WT-163-1	K20-WAT	D20-WAT	49-831	49-844
Unspecified	W	SDC-89-1	K10-SDC	D10-SDC	49-834	49-810
Unspecified	W	WT-288-1	K10-WAT	D10-WAT	49-816	49-812
McCulloch Italy / Husqvarna						
730	Z	C1Q-M24	RB-38	GND-27		49-909
735	Z	C1Q-M25	RB-38	GND-27		49-909
740	Z	C1Q-M26	RB-38	GND-27		49-909
32 CC chain SAW	Z	C1Q-M27	RB-39	GND-35	49-902	
543 chain Saw	Z	C1Q-M43	RB-45	GND-33		49-884
C5010 chain Saw	Z	C1Q-M44	RB-110	GND-33		49-884
Cabrio 320	Z	C1Q-M41	RB-51	GND-39		
Cabrio 380	Z	C1Q-M41	RB-51	GND-39		
D25	Z	C1U-M40	RB-28	GND-18	49-866	
D25	Z	C1U-M38	RB-28	GND-18	49-866	
MC-4	Z	C1Q-M31	RB-51	GND-39		
MC-5	Z	C1Q-M31	RB-51	GND-39		
PRO MAC 40	Z	C1Q-M39	RB-38	GND-27		49-909
PRO MAC 46	Z	C1Q-M39	RB-38	GND-27		49-909
Mitsubishi						
110 PVD	W	WT-107-1	K10-WAT	D10-WAT	49-816	49-812
NE 260 X	W	WYJ-163-1	K20-WYJ	D20-WYJ	49-882	
NE 260 X	W	WYJ-163-1	K20-WYJ	D20-WYJ	49-882	
T 100	W	WY-55-1	K10-WY	D10-WY	49-875	49-839
T 110	W	WY-55-1	K10-WY	D10-WY	49-875	49-839
T 140	W	WY-50-1	K10-WY	D10-WY	49-875	49-839
T 140	W	WY-55-1	K10-WY	D10-WY	49-875	49-839
T 140 PFD	W	WYK-3-1	K20-WYK	D20-WYK		
T 140 PFD	W	WYK-3-1	K20-WYK	D20-WYK		
T 200	W	WYJ-2-1	K20-WYJ	D20-WYJ	49-882	
T 200P D T9H	W	WYJ-37-1	K20-WYJ	D20-WYJ	49-882	
T 320 BPB	W	WYJ-252-1	K20-WYJ	D20-WYJ	49-882	
T 320 MVD	W	WYK-117-1	K13-WYK	D13-WYK		
T 320 PSD	W	WYK-118-1	K13-WYK	D13-WYK		
T 320 PSD-002	W	WYJ-215-1	K20-WYJ	D20-WYJ	49-882	
T 50 M	W	WA-74-1	K10-WAT	D10-WAT	49-816	49-812
T 70	W	WT-49-1	K10-WAT	D10-WAT	49-816	49-812
T 70	W	WT-53-1	K10-WAT	D10-WAT	49-816	49-812
T-300	W	WYJ-195-1	K20-WYJ	D20-WYJ	49-882	
T320	W	WYK-198-1	K21-WYK	D21-WYK		
T-320MVD	W	WYK-223-1	K21-WYK	D21-WYK		
T320PSD	W	WYJ-387-1	K20-WYJ	D20-WYJ	49-882	
TB 33	W	WPF-5-1	K10-WPF			
TB20	W	WYB-26-1	K10-WYB	D10-WYB		
TB20	W	WYB-27-1	K10-WYB	D10-WYB		
TB20	W	WYK-243-1	K21-WYK	D21-WYK		
TB23	W	WYK-236-1	K21-WYK	D21-WYK		
TB23	W	WYK-238-1	K21-WYK	D21-WYK		
TB23HS	W	WYK-237-1	K21-WYK	D21-WYK		
tb26	W	WYK-249-1	K21-WYK	D21-WYK		
TF 24 PFD	W	WYK-13-1	K21-WYK	D21-WYK		
TL 20 PFD	W	WYK-34-1	K21-WYK	D21-WYK		
TL 20 PFD	W	WYJ-279-1	K20-WYJ	D20-WYJ	49-882	
TL 20 PFD	W	WYJ-196-1	K20-WYJ	D20-WYJ	49-882	
TL 20 PFD	W	WYJ-57-1	K20-WYJ	D20-WYJ	49-882	
TL 20 PFD	W	WYJ-204-1	K20-WYJ	D20-WYJ	49-882	
TL 20 PFD	W	WYK-102-1	K21-WYK	D21-WYK		
TL 20 PSD	W	WYJ-83-1	K20-WYJ	D20-WYJ	49-882	
TL 20 PVD	W	WYJ-270-1	K20-WYJ	D20-WYJ	49-882	
TL 20 PVD	W	WYJ-271-1	K20-WYJ	D20-WYJ	49-882	
TL 20 PVD	W	WYJ-267-1	K20-WYJ	D20-WYJ	49-882	
TL 20 PVD	W	WYJ-199-1	K20-WYJ	D20-WYJ	49-882	
TL 20 PVD	W	WYJ-200-1	K20-WYJ	D20-WYJ	49-882	
TL 20 PVD	W	WYJ-201-1	K20-WYJ	D20-WYJ	49-882	
TL 20 PVD	W	WYJ-246-1	K20-WYJ	D20-WYJ	49-882	
TL 20 PVD	W	WYJ-123-1	K20-WYJ	D20-WYJ	49-882	
TL 20 PVD	W	WYJ-67-1	K20-WYJ	D20-WYJ	49-882	
TL 201	W	WYB-2-1	K10-WYB	D10-WYB		
TL 201 FD	W	WYL-153-1	K20-WYL	D11-WYL		
TL 23 PFD	W	WYK-30-1	K21-WYK	D21-WYK		
TL 23 PFD	W	WYJ-57-1	K20-WYJ	D20-WYJ	49-882	
TL 23 PFD	W	WYJ-136-1	K20-WYJ	D20-WYJ	49-882	
TL 23 PVD	W	WYJ-247-1	K20-WYJ	D20-WYJ	49-882	

OEM ENGINE/UNIT		WALBRO CARBURETOR			OREGON	
Model	Carb	№	Kit	Gaskets	Kit	Gaskets
Mitsubishi						
TL 23 PVD	W	WYJ-150-1	K20-WYJ	D20-WYJ	49-882	
TL 23 PVD	W	WYJ-191-1	K20-WYJ	D20-WYJ	49-882	
TL 23 PVD	W	WYJ-269-1	K20-WYJ	D20-WYJ	49-882	
TL 231	W	WYB-1-1	K10-WYB	D10-WYB		
TL 231	W	WYL-150-1	K20-WYL	D11-WYL		
TL 231 FD	W	WYK-136-1	K21-WYK	D21-WYK		
TL 26 MFD	W	WYK-56-1	K21-WYK	D21-WYK		
TL 26 PFD	W	WYK-54-1	K21-WYK	D21-WYK		
TL 26 PFD	W	WYK-21-1	K21-WYK	D21-WYK		
TL 26 PFD	W	WYJ-104-1	K20-WYJ	D20-WYJ	49-882	
TL 26 PFD	W	WYK-47-1	K21-WYK	D21-WYK		
TL 26 PSD	W	WYK-50-1	K21-WYK	D21-WYK		
TL 26 PSD-409	W	WYK-71-1	K21-WYK	D21-WYK		
TL 26 PVD	W	WYJ-98-1	K20-WYJ	D20-WYJ	49-882	
TL 26 PVD	W	WYJ-139-1	K20-WYJ	D20-WYJ	49-882	
TL 26 PVD	W	WYK-37-1	K21-WYK	D21-WYK		
TL 26 PVD	W	WYJ-79-1	K20-WYJ	D20-WYJ	49-882	
TL 26 PVD	W	WYJ-66-1	K20-WYJ	D20-WYJ	49-882	
TL 26 PVD	W	WYJ-245-1	K20-WYJ	D20-WYJ	49-882	
TL 261	W	WYK-154-1	K21-WYK	D21-WYK		
TL 261 FD	W	WYJ-293-1	K20-WYJ	D20-WYJ	49-882	
TL 261 FD	W	WYK-137-1	K21-WYK	D21-WYK		
TL 33 PFD	W	WYJ-194-1	K20-WYJ	D20-WYJ	49-882	
TL 33 PFD	W	WYK-32-1	K21-WYK	D21-WYK		
TL 33 PFD	W	WYK-48-1	K21-WYK	D21-WYK		
TL 33 PPD	W	WYJ-92-1	K20-WYJ	D20-WYJ	49-882	
TL 33 PSD	W	WYK-43-1	K21-WYK	D21-WYK		
TL 33 PSD	W	WYK-51-1	K21-WYK	D21-WYK		
TL 33 PVD	W	WYJ-303-1	K20-WYJ	D20-WYJ	49-882	
TL 33 PVD	W	WYJ-122-1	K20-WYJ	D20-WYJ	49-882	
TL 43	W	WYK-120-1	K21-WYK	D21-WYK		
TL 43	W	WT-604-1	K20-WAT	D10-WAT	49-831	49-812
TL 43 PFD	W	WYK-76-1	K21-WYK	D21-WYK		
TL 43 PFD	W	WYK-29-1	K21-WYK	D21-WYK		
TL 43 PFD	W	WYK-52-1	K21-WYK	D21-WYK		
TL 43 PSD	W	WYK-44-1	K21-WYK	D21-WYK		
TL 52	W	WYK-121-1	K13-WYK	D13-WYK		
TL 52 PFD	W	WYK-53-1	K21-WYK	D21-WYK		
TL 52 PFD	W	WYK-149-1	K21-WYK	D21-WYK		
TL 52 PFD	W	WYK-28-1	K21-WYK	D21-WYK		
TL 52 PFD	W	WYK-113-1	K21-WYK	D21-WYK		
TL 52 PSD	W	WT-605-1	K20-WAT	D10-WAT	49-831	49-812
TL201FD	W	WYB-20-1	K10-WYB	D10-WYB		
TL201VD	W	WYJ-337-1	K20-WYJ	D20-WYJ	49-882	
TL201VD	W	WYJ-338-1	K20-WYJ	D20-WYJ	49-882	
TL201VD	W	WYJ-339-1	K20-WYJ	D20-WYJ	49-882	
TL201VD	W	WYJ-340-1	K20-WYJ	D20-WYJ	49-882	
TL231	W	WYK-197-1	K21-WYK	D21-WYK		
TL231FD	W	WYB-24-1	K10-WYB	D10-WYB		
TL23PVD	W	WYJ-405-1	K20-WYJ	D20-WYJ	49-882	
TL261	W	WYK-202-1	K22-WYK	D22-WYK		
TL261VD	W	WYJ-416-1	K20-WYJ	D20-WYJ	49-882	
TL261VD	W	WYJ-406-1	K20-WYJ	D20-WYJ	49-882	
TL261VD	W	WYJ-408-1	K20-WYJ	D20-WYJ	49-882	
TL26PVD	W	WYK-187-1	K21-WYK	D21-WYK		
TL26PVD	W	WYJ-403-1	K20-WYJ	D20-WYJ	49-882	
TL33	W	WYJ-350-1	K20-WYJ	D20-WYJ	49-882	
TL33PFD	W	WYJ-412-1	K20-WYJ	D20-WYJ	49-882	
TL33PFD	W	WYK-194-1	K22-WYK	D22-WYK		
TL33PPD	W	WYJ-386-1	K20-WYJ	D20-WYJ	49-882	
TL33PSD	W	WYK-204-1	K21-WYK	D21-WYK		
TL-43	W	WYK-178-1	K21-WYK	D21-WYK		
TL43PFD	W	WYK-234-1	K21-WYK	D21-WYK		
TL43PSD	W	WYK-205-1	K21-WYK	D21-WYK		
TL50	W	WT-730-1	K20-WAT	D20-WAT	49-831	49-844
TL-50	W	WYK-215-1	K21-WYK	D21-WYK		
TL52JPFD	W	WYK-196-1	K22-WYK	D22-WYK		
TL52PFD	W	WYK-235-1	K21-WYK	D21-WYK		
TLE 20 FD	W	WYA-20-1	K20-WYA	D20-WYA		
TLE 23 FD	W	WYA-14-1	K20-WYA	D20-WYA		

CARB = Original OEM Carburetor

B = Bing
N = Nikki
T = Tillotson
TK = Teiki
W = Walbro
Z = Zama

*** No model information available

Carburetor Kit Application Chart

OEM ENGINE/UNIT		WALBRO CARBURETOR			OREGON	
Model	Carb	№	Kit	Gaskets	Kit	Gaskets
Mitsubishi						
TLE 26 FD	W	WYA-13-1	K20-WYA	D20-WYA		
TLE 33 FD	W	WYA-21-1	K20-WYA	D20-WYA		
TLE20VD	W	WYA-55-1	K20-WYA	D20-WYA		
TLE20VD	W	WYA-33-1	K20-WYA	D20-WYA		
TLE23FD	W	WYA-48-1	K20-WYA	D20-WYA		
TLE26FD	W	WYA-61-1	K20-WYA	D20-WYA		
TLE33FD	W	WYA-62-1	K20-WYA	D20-WYA		
TLE43FD	W	WYA-31-1	K20-WYA	D20-WYA		
TM 18	W	WYJ-17-1	K20-WYJ	D20-WYJ	49-882	
TM 18	W	WYJ-40-1	K20-WYJ	D20-WYJ	49-882	
TM 21	W	WYJ-28-1	K20-WYJ	D20-WYJ	49-882	
TM 21	W	WYJ-38-1	K20-WYJ	D20-WYJ	49-882	
TM 21	W	WYJ-42-1	K20-WYJ	D20-WYJ	49-882	
TM 21	W	WYJ-7-1	K20-WYJ	D20-WYJ	49-882	
TM 21	W	WYJ-44-1	K20-WYJ	D20-WYJ	49-882	
TM 24	W	WYJ-28-1	K20-WYJ	D20-WYJ	49-882	
TM 24	W	WYJ-38-1	K20-WYJ	D20-WYJ	49-882	
TM 24	W	WYJ-42-1	K20-WYJ	D20-WYJ	49-882	
TM 24	W	WYJ-44-1	K20-WYJ	D20-WYJ	49-882	
TM 24	W	WYJ-7-1	K20-WYJ	D20-WYJ	49-882	
TM 24 BFD	W	WYJ-19-1	K20-WYJ	D20-WYJ	49-882	
TM 24 PSD	W	WYJ-13-1	K20-WYJ	D20-WYJ	49-882	
TM 24 PSD 600A	W	WYJ-39-1	K20-WYJ	D20-WYJ	49-882	
TM 24 PSE	W	WYK-17-1	K22-WYK	D22-WYK		
TM 33	W	WYJ-21-1	K20-WYJ	D20-WYJ	49-882	
TM 33	W	WYJ-29-1	K20-WYJ	D20-WYJ	49-882	
TM 33	W	WYJ-41-1	K20-WYJ	D20-WYJ	49-882	
TM 33	W	WYJ-43-1	K20-WYJ	D20-WYJ	49-882	
TM 33 PFD	W	WYK-15-1	K21-WYK	D21-WYK		
TM 600 A	W	WYJ-13-1	K20-WYJ	D20-WYJ	49-882	
TO-85	Z	C1U-D1	RB-63	GND-17		49-880
TO-85	Z	C1U-D1	RB-63	GND-17		49-880
TU 26	W	WYJ-297-1	K20-WYJ	D20-WYJ	49-882	
TU26MPD	W	WYJ-385-1	K20-WYJ	D20-WYJ	49-882	
MTD (See Ryobi)						
Norm Kel (Green Power)						
GP-21S	Z	C1U-M16	RB-28	GND-18	49-866	
Oleo Mac						
350	Z	C2-L1	RB-15	GND-8	49-836-0	49-860
730	Z	C1Q-E7	RB-76	GND-41		
730	Z	C1Q-E10	RB-76	GND-41		
735	Z	C1Q-E10	RB-76	GND-41		
740	Z	C1Q-E7	RB-76	GND-41		
740	Z	C1Q-E10	RB-76	GND-41		
Onan						
LMG Carburetor	W	LMG-221-1	K1-LMEG	GI-LM		
LMG Carburetor	W	LMG-225-1	K1-LMEG	GI-LM		
LMG Carburetor	W	LMG-187-1	K2-LMEG	GI-LM		
LMG Carburetor	W	LMG-188-1	K1-LMEG	GI-LM		
LMG Carburetor	W	LMG-189-1	K1-LMEG	GI-LM		
LMG Carburetor	W	LMG-191-1	K1-LMEG	GI-LM		
LMG Carburetor	W	LMG-208-1	K1-LMEG	GI-LM		
O.P.E.M.						
K1	W	WT-111-1	K20-WAT	D10-WAT	49-816	49-812
K1	W	WT-48-1	K20-WAT	D10-WAT	49-816	49-812
K2	W	WT-111-1	K20-WAT	D10-WAT	49-816	49-812
K2	W	WT-48-1	K20-WAT	D10-WAT	49-816	49-812
145	T	HK-15E		DG-1HK		49-800
155	T	HK-15E		DG-1HK		49-800
165	T	HE-8A		DG-1HK		49-800
165	T	HK-38A		DG-1HK		49-800

CARB = Original OEM Carburetor

B = Bing
N = Nikki
T = Tillotson
TK = Teiki
W = Walbro
Z = Zama

*** No model information available

OEM ENGINE/UNIT		WALBRO CARBURETOR			OREGON	
Model	Carb	№	Kit	Gaskets	Kit	Gaskets
ParCar Golf Cart						
7 HP	W	WHL-10-1	K1-WHL			
7 HP	W	WHL-9-1	K1-WHL			
Partner / Pioneer						
400	Z	C1Q-EL1	RB-45	GND-33	49-884	49-884
410	Z	C1Q-EL1	RB-45	GND-33	49-884	49-884
Partner / Pioneer						
450	Z	C1Q-EL1	RB-45	GND-33	49-884	49-884
460	Z	C1Q-EL1	RB-45	GND-33	49-884	49-884
490	Z	C1Q-EL1	RB-45	GND-33	49-884	49-884
510	Z	C1Q-EL1	RB-45	GND-33	49-884	49-884
K1200	T	HS-175D	RK-23HS	DG-5HS	49-803	49-802
K750	Z	C3-EL29	RB-133	GND-73		
P25	T	HU-15E	RK-14HU	DG-3HU	49-805	49-804
P28	T	HU-15E	RK-14HU	DG-3HU	49-805	49-804
P40	T	HS-147D	RK-23HS	DG-5HS	49-803	49-802
P41	T	HS-147D	RK-23HS	DG-5HS	49-803	49-802
P41T	T	HS-214A	RK-23HS	DG-5HS	49-803	49-802
P60	T	HS-211A	RK-23HS	DG-5HS	49-803	49-802
P61	T	HS-213A	RK-23HS	DG-5HS	49-803	49-802
P70	T	HS-172B	RK-23HS	DG-5HS	49-803	49-802
P85	T	HS-172B	RK-23HS	DG-5HS	49-803	49-802
Poulan						
201	T	HS-59A	RK-23HS	DG-5HS	49-803	49-802
223	T	HS-59A	RK-23HS	DG-5HS	49-803	49-802
245	T	HS-59B	RK-23HS	DG-5HS	49-803	49-802
360	T	HS-59A	RK-23HS	DG-5HS	49-803	49-802
361	T	HS-198A	RK-23HS	DG-5HS	49-803	49-802
400	T	HS-59A	RK-23HS	DG-5HS	49-803	49-802
405	W	WJ-38-1	K10-WJ	D10-WJ	49-873	49-843
450	T	HS-59A	RK-23HS	DG-5HS	49-803	49-802
451	T	HS-59A	RK-23HS	DG-5HS	49-803	49-802
455	W	WJ-38-1	K10-WJ	D10-WJ	49-873	49-843
525	W	WJ-38-1	K10-WJ	D10-WJ	49-873	49-843
655	W	WJ-38-1	K10-WJ	D10-WJ	49-873	49-843
1400	W	WA-198-1	K20-WAT	D20-WAT	49-831	49-844
3400	W	HDB-19-1	K10-HDB	D10-HDB	49-832	49-806
4000	W	HDB-19-1	K10-HDB	D10-HDB	49-832	49-806
4200	T	HS-168A	RK-23HS	DG-5HS	49-803	49-802
5200	T	HS-176A	RK-23HS	DG-5HS	49-803	49-802
PATRIOT 1900 SAW	Z	C1Q-W8	RB-72	GND-27		49-909
1400 Series	W	WT-63-1	K10-WAT	D10-WAT	49-816	49-812
18 cc	W	WT-379-1	K10-WAT	D10-WAT	49-816	49-812
18 cc	W	WT-307-1	K10-WAT	D10-WAT	49-816	49-812
18 cc	W	WT-221-1	K20-WAT	D10-WAT	49-831	49-812
18 cc	W	WT-267-1	K10-WAT	D10-WAT	49-816	49-812
2.0 C.I.D.	W	WT-310-1	K10-WAT	D10-WAT	49-816	49-812
2.0 C.I.D.	W	WT-309-1	K10-WAT	D10-WAT	49-816	49-812
2.3 C.I.D.	W	WT-309-1	K10-WAT	D10-WAT	49-816	49-812
2.8 cu.	W	HDA-49-1	K20-HDA	D10-HDA	49-845	
20 cc	W	WT-501-1	K20-WAT	D10-WAT	49-831	49-812
20 cc	W	WT-557-1	K20-WAT	D20-WAT	49-831	49-844
21 cc	W	WT-308-1	K20-WAT	D20-WAT	49-831	49-844
21cc	W	WT-630-1	K24-WAT	D22-WAT		
21cc	W	WT-626-1	K24-WAT	D22-WAT		
24 cc	W	WA-228-1	K23-WAT	D23-WAT		
24 cc	W	WA-229-1	K20-WAT	D20-WAT	49-831	49-844
24 cc	W	WT-624-1	K20-WAT	D20-WAT	49-831	49-844
24 cc	W	WT-558-1	K20-WAT	D20-WAT	49-831	49-844
24cc	W	WT-784-1	K20-WAT	D20-WAT	49-831	49-844
25 CC LE Clutch	Z	C1U-W16	RB-47	GND-18		
25 CC LE Clutch	Z	C1U-W16	RB-47	GND-18		
25 CC SIMPLE START®	Z	C1U-W17	RB-111	GND-49		
25cc	W	WT-631-1	K24-WAT	D22-WAT		
25cc	W	WT-670-1	K24-WAT	D22-WAT		
25cc	W	WT-669-1	K24-WAT	D22-WAT		
25cc	W	WT-638-1	K20-WAT	D20-WAT	49-831	49-844
28cc Brushcutter	Z	C1Q-W36	RB-47	GND-18		
28cc trimmer	Z	C1Q-W31	RB-47	GND-18		
28cc trimmer	Z	C1Q-W34	RB-47	GND-18		
28cc trimmer	Z	C1Q-W35	RB-47	GND-18		
3.0 cu.	W	HDA-49-1	K20-HDA	D10-HDA	49-845	
3.3 cu.	W	HDA-49-1	K20-HDA	D10-HDA	49-845	
3.4 cu.	W	HDB-18-1	K10-HDB	D10-HDB	49-832	49-806
32 cc	W	WT-709-1	K26-WAT	D26-WAT		

C

Carburetor Kit Application Chart

OEM ENGINE/UNIT		WALBRO CARBURETOR			OREGON	
Model	Carb	№	Kit	Gaskets	Kit	Gaskets
Poulan						
32 cc	W	WT-579-1	K20-WAT	D20-WAT	49-831	49-844
32 cc	W	WT-618-1	K10-WAT	D10-WAT	49-816	49-812
32 cc	W	WT-619-1	K10-WAT	D10-WAT	49-816	49-812
32 cc (Home Depot)	W	WA-221-1	K20-WAT	D20-WAT	49-831	49-844
32cc	W	WT-628-1	K20-WAT	D20-WAT	49-831	49-844
36/42 LECS1 Non AVsaw	Z	C1Q-W14	RB-41	GND-27	49-898	49-909
42cc LE CSI	W	WT-637-1	K20-WAT	D20-WAT	49-831	49-844
50 cc	W	HDA-128-1	K20-HDA	D10-HDA	49-845	
54 cc	W	HDA-164-1	K21-HDA	D10-HDA		
61 cc	W	HDA-137-1	K20-HDA	D10-HDA	49-845	
61cc	W	HDA-164-1	K21-HDA	D10-HDA		
Anti Vibe	W	WT-391-1	K10-WAT	D10-WAT	49-816	49-812
Bricomarche CB21 FEATHERLITE		Z	C1U-W7C-D	RB-73	GND-18	49-908
CS1 Airhead	Z	C1M-W26	RB-129	GND-70		
CS1 Hedgetrimmer	Z	C1U-W22	RB-47	GND-18		
CSI	W	WT-324-1	K10-WAT	D10-WAT	49-816	49-812
CSI	W	WT-662-1	K26-WAT	D26-WAT		
CSI Anti Vibe	W	WT-518-1	K10-WAT	D10-WAT	49-816	49-812
CSI ANTI-VIBE	W	WT-625-1	K20-WAT	D20-WAT	49-831	49-844
EH122	W	HDA-220-1	K20-HDA	D11-HDA	49-845	
European version	W	WT-247-1	K10-WAT	D10-WAT	49-816	49-812
Featherlite	W	WT-632-1	K20-WAT	D20-WAT	49-831	49-844
G T I	W	WT-141-1	K10-WAT	D10-WAT	49-816	49-812
G T I	W	WT-182-1	K10-WAT	D10-WAT	49-816	49-812
GBI	W	WA-214-1	K20-WAT	D20-WAT	49-831	49-844
GBI	W	WT-538-1	K10-WAT	D10-WAT	49-816	49-812
GTI	W	WT-629-1	K20-WAT	D20-WAT	49-831	49-844
GTI	W	WT-583-1	K20-WAT	D20-WAT	49-831	49-844
GTI	W	WA-219-1	K20-WAT	D20-WAT	49-831	49-844
GTI	W	WT-298-1	K10-WAT	D10-WAT	49-816	49-812
GTI	W	WA-207-1	K20-WAT	D20-WAT	49-831	49-844
GTI 32CC	W	WT-628-1	K20-WAT	D20-WAT	49-831	49-844
GTI clutch	W	WT-300-1	K10-WAT	D10-WAT	49-816	49-812
GTI non clutch	W	WA-217-1	K20-WAT	D20-WAT	49-831	49-844
GTI non clutch	W	WA-219-1	K20-WAT	D20-WAT	49-831	49-844
GTI non-clutch	W	WA-216-1	K20-WAT	D20-WAT	49-831	49-844
GTI Wheeled Trimmer	W	WT-627-1	K20-WAT	D20-WAT	49-831	49-844
LB 25	W	WT-586-1	K20-WAT	D20-WAT	49-831	49-844
LB 25	W	WT-587-1	K20-WAT	D20-WAT	49-831	49-844
LE 21	W	WT-242-1	K10-WAT	D10-WAT	49-816	49-812
LE 21	W	WT-262-1	K10-WAT	D10-WAT	49-816	49-812
LE 25	W	WT-587-1	K20-WAT	D20-WAT	49-831	49-844
LE 25cc Non-Clutch F'Lite	Z	C1U-W18	RB-115	GND-12		49-851
LE Non-Clutch trimmer	Z	C1U-W19	RB-117	GND-64		
LE Sears Non-Clutch trimmer	Z	C1U-W24	RB-115	GND-12		49-851
LE-CS1Non-AV/AV chain Saw	Z	C1Q-W20	RB-41	GND-27	49-898	49-909
LT	W	WT-639-1	K20-WAT	D20-WAT	49-831	49-844
LT 18 non clutch	W	WA-223-1	K20-WAT	D20-WAT	49-831	49-844
LT 18 non clutch	W	WA-226-1	K20-WAT	D20-WAT	49-831	49-844
LT 18 non clutch	W	WA-224-1	K20-WAT	D20-WAT	49-831	49-844
LT 21	W	WA-215-1	K20-WAT	D20-WAT	49-831	49-844
LT 21	W	WT-380-1	K10-WAT	D10-WAT	49-816	49-812
LT 21	W	WT-245-1	K20-WAT	D10-WAT	49-831	49-812
LT 21	W	WT-299-1	K20-WAT	D10-WAT	49-831	49-812
LT 21 non clutch	W	WA-227-1	K20-WAT	D20-WAT	49-831	49-844
LT 21 non clutch	W	WA-218-1	K20-WAT	D20-WAT	49-831	49-844
LT non-clutch	W	WA-232-1	K20-WAT	D20-WAT	49-831	49-844
LT Series	W	WT-592-1	K24-WAT	D22-WAT		
LT Series	W	WA-230-1	K10-WAT	D10-WAT	49-816	49-812
LT Series non clutch	W	WA-225-1	K23-WAT	D23-WAT		
Micro	W	WT-20-1	K10-WAT	D10-WAT	49-816	49-812
Micro 25	T	HU-10C	RK-14HU	DG-3HU	49-805	49-804
Non-AV	W	WT-600-1	K20-WAT	D10-WAT	49-831	49-812
O P P	W	WT-182-1	K10-WAT	D10-WAT	49-816	49-812
OKAY T211	Z	C1U-W7C-D	RB-73	GND-18	49-908	
P 42 T	W	WJ-21-1	K10-WJ	D10-WJ	49-873	49-843
P 42 T	W	WJ-46-1	K10-WJ	D10-WJ	49-873	49-843
P 52 T	W	WJ-21-1	K10-WJ	D10-WJ	49-873	49-843
P 52 T	W	WJ-46-1	K10-WJ	D10-WJ	49-873	49-843
P 600	W	WT-540-1	K20-WAT	D10-WAT	49-831	49-812
P 600	W	WT-529-1	K20-WAT	D10-WAT	49-831	49-812
P 600	W	WT-542-1	K20-WAT	D10-WAT	49-831	49-812
P 600	W	WT-515-1	K20-WAT	D10-WAT	49-831	49-812
P 600	W	WT-239-1	K20-WAT	D10-WAT	49-831	49-812
P 600	W	WT-202-1	K20-WAT	D10-WAT	49-831	49-812
P 600	W	WT-285-1	K10-WAT	D10-WAT	49-816	49-812
P 600	W	WT-289-1	K20-WAT	D10-WAT	49-831	49-812
P 600	W	WT-350-1	K20-WAT	D10-WAT	49-831	49-812
P 600	W	WA-202-1	K10-WAT	D10-WAT	49-816	49-812
P 600 LE	W	WT-610-1	K20-WAT	D20-WAT	49-831	49-844

OEM ENGINE/UNIT		WALBRO CARBURETOR			OREGON	
Model	Carb	№	Kit	Gaskets	Kit	Gaskets
Poulan						
P 62 T	W	WJ-46-1	K10-WJ	D10-WJ	49-873	49-843
P 62 T	W	WJ-21-1	K10-WJ	D10-WJ	49-873	49-843
P 65T	W	WJ-49-1	K10-WJ	D10-WJ	49-873	49-843
P600	W	WT-660-1	K20-WAT	D20-WAT	49-831	49-844
P-600 chain Saw	Z	C1Q-W29	RB-38	GND-27		49-909
Colibri SST,	Z	C1U-W7C-D	RB-73	GND-18	49-908	
POULAN 2250	Z	C1Q-W9	RB-72	GND-27		49-909
POULAN 2250	Z	C1Q-W9	RB-72	GND-27		49-909
POULAN PRO 2210	Z	C1Q-W9	RB-72	GND-27		49-909
POULAN PRO 2600	Z	C1Q-W9	RB-72	GND-27		49-909
POULAN PRO BVM 200LE	Z	C1Q-W11	RB-47	GND-18		
TE450CXL,	Z	C1U-W10	RB-47	GND-18		
Power Handle	W	WA-149-1	K10-WAT	D10-WAT	49-816	49-812
Power Handle	W	WA-169-1	K10-WAT	D10-WAT	49-816	49-812
Power Handle	W	WA-199-1	K10-WAT	D10-WAT	49-816	49-812
Pro 475	W	WJ-28-1	K10-WJ	D10-WJ	49-873	49-843
R532 trimmer	Z	C1U-W32	RB-142	GND-78		
RS32	W	WT-757-1	K10-WAT	D10-WAT	49-816	49-812
SEARS 79533	Z	C1U-W4	RB-73	GND-12	49-908	49-851
SEARS 79566	Z	C1U-W4	RB-73	GND-12	49-908	49-851
SEARS 2.6 18" LE SAW,	Z	C1Q-W9	RB-72	GND-27		49-909
SEARS 51832	Z	C1U-W4	RB-73	GND-12	49-908	49-851
SEARS 79420 25cc	Z	C1U-W12	RB-47	GND-18		
SEARS 7943025	Z	C1Q-W11	RB-47	GND-18		
SEARS 7943125,	Z	C1Q-W11	RB-47	GND-18		
SEARS 7943425,	Z	C1Q-W11	RB-47	GND-18		
SEARS 7945525	Z	C1Q-W11	RB-47	GND-18		
SEARS 79539	Z	C1U-W4	RB-73	GND-12	49-908	49-851
SEARS 79564	Z	C1U-W4	RB-73	GND-12	49-908	49-851
SEARS 795690	Z	C1U-W4	RB-73	GND-12	49-908	49-851
SEARS 79570	Z	C1U-W13	RB-47	GND-18		
SEARS 7963325	Z	C1U-W13	RB-47	GND-18		
SEARS 79653	Z	C1U-W4	RB-73	GND-12	49-908	49-851
SEARS 7973025,	Z	C1Q-W11	RB-47	GND-18		
SEARS 7973425,	Z	C1Q-W11	RB-47	GND-18		
SEARS 7975525	Z	C1Q-W11	RB-47	GND-18		
SEARS CAN 24cc,	Z	C1Q-W11	RB-47	GND-18		
SUPER 25	Z	C1Q-W2	RB-39	GND-27	49-902	49-909
Super 25	W	WT-83-1	K10-WAT	D10-WAT	49-816	49-812
TriMAC 210 GT	Z	C1U-W7C-D	RB-73	GND-12	49-908	49-851
Unspecified	W	WT-63-1	K10-WAT	D10-WAT	49-816	49-812
WEEDEATER 180 Excalibur	Z	C1U-W4	RB-73	GND-12	49-908	49-851
WEEDEATER 220 Excalibur	Z	C1U-W4	RB-73	GND-12	49-908	49-851
WEEDEATER Aust WildThing,	Z	C1U-W7C-D	RB-73	GND-12	49-908	49-851
WEEDEATER BV1 800 LE	Z	C1Q-W11	RB-47	GND-18		
WEEDEATER BV1 850 LE	Z	C1Q-W11	RB-47	GND-18		
WEEDEATER BV1800,	Z	C1Q-W11	RB-47	GND-18		
WEEDEATER BV200 LB	Z	C1Q-W11	RB-47	GND-18		
WEEDEATER BV200 LE	Z	C1Q-W11	RB-47	GND-18		
WEEDEATER BV 2000 LE	Z	C1Q-W11	RB-47	GND-18		
WEEDEATER FEATHERLITE	Z	C1U-W7C-D	RB-73	GND-12	49-908	49-851
WEEDEATER FEATHERLITE	Z	C1U-W7C-D	RB-73	GND-12	49-908	49-851
WEEDEATER FEATHERLITE	Z	C1U-W10	RB-47	GND-18		
WEEDEATER GHT180 LE,	Z	C1U-W13	RB-47	GND-18		
WEEDEATER GHT220	Z	C1U-W13	RB-47	GND-18		
WEEDEATER LF-1 500LE,	Z	C1U-W12	RB-47	GND-18		
WEEDEATER TE400LE,	Z	C1U-W10	RB-47	GND-18		
WEEDEATER XT200 FEATHERLITE		Z	C1U-W7C-D	RB-73	GND-12	49-908
49-851						
WOOD SHARK	Z	C1Q-W8	RB-72	GND-27		49-909
Robin						
BF 22	W	WYL-25-1	K20-WYL	D11-WYL		
BF 25	W	WYL-25-1	K20-WYL	D11-WYL		
BN2750	W	WYK-241-1	K21-WYK	D21-WYK		
BR 17	W	WY-61-1	K10-WY	D10-WY	49-875	49-839
BX 2	W	WYK-25-1	K21-WYK	D21-WYK		
EC 01	W	WZ-12-1	K10-WZ	D10-WZ	49-877	49-848
EC 01	W	WZ-13-1	K10-WZ	D10-WZ	49-877	49-848

CARB = Original OEM Carburetor

B = Bing
N = Nikki
T = Tillotson
TK = Teiki
W = Walbro
Z = Zama

*** No model information available

C

Carburetor Kit Application Chart

OEM ENGINE/UNIT		WALBRO CARBURETOR			OREGON	
Model	Carb	№	Kit	Gaskets	Kit	Gaskets
Robin						
EC 01	W	WZ-5-1	K10-WZ	D10-WZ	49-877	49-848
EC 01 A	W	WA-186-1	K10-WAT	D10-WAT	49-816	49-812
EC 01 A	W	WZ-27-1	K10-WZ	D10-WZ	49-877	49-848
EC 01 R	W	WY-35-1	K10-WY	D10-WY	49-875	49-839
EC 01 R	W	WZ-31-1	K10-WZ	D10-WZ	49-877	49-848
EC 01 R	W	WY-40-1	K10-WY	D10-WY	49-875	49-839
EC 02	W	WA-40-1	K10-WAT	D10-WAT	49-816	49-812
EC 02	W	WZ-10-1	K10-WZ	D10-WZ	49-877	49-848
EC 02	W	WZ-11-1	K10-WZ	D10-WZ	49-877	49-848
EC 02	W	WZ-21-1	K10-WZ	D10-WZ	49-877	49-848
EC 02	W	WY-36-1	K10-WY	D10-WY	49-875	49-839
EC 02	W	WZ-4-1	K10-WZ	D10-WZ	49-877	49-848
EC 02 E	W	WY-19-1	K10-WY	D10-WY	49-875	49-839
EC 02 E	W	WY-25-1	K10-WY	D10-WY	49-875	49-839
EC 02 E	W	WZ-33-1	K10-WZ	D10-WZ	49-877	49-848
EC 02 EF	W	WY-32-1	K10-WY	D10-WY	49-875	49-839
EC 02 EH	W	WY-34-1	K10-WY	D10-WY	49-875	49-839
EC 02 EHR	W	WY-58-1	K10-WY	D10-WY	49-875	49-839
EC 02 EHR	W	WYJ-1-1	K20-WYJ	D20-WYJ	49-882	
EC 02 EHR	W	WYJ-24-1	K20-WYJ	D20-WYJ	49-882	
EC 02 EHR	W	WY-60-1	K10-WY	D10-WY	49-875	49-839
EC 02 EHR	W	WYJ-4-1	K20-WYJ	D20-WYJ	49-882	
EC 02 ER	W	WYL-12-1	K20-WYL	D11-WYL		
EC 02 ER	W	WY-10-1	K10-WY	D10-WY	49-875	49-839
EC 02 ER	W	WY-26-1	K10-WY	D10-WY	49-875	49-839
EC 02 ER	W	WY-29-1	K10-WY	D10-WY	49-875	49-839
EC 02 ER	W	WY-37-1	K10-WY	D10-WY	49-875	49-839
EC 02 ER	W	WY-38-1	K10-WY	D10-WY	49-875	49-839
EC 02 ER (L)	W	WYP-5-1	k20-WYMP	D20-WYMP		
EC 02 F	W	WY-31-1	K10-WY	D10-WY	49-875	49-839
EC 02 F	W	WZ-16-1	K10-WZ	D10-WZ	49-877	49-848
EC 02 F	W	WZ-30-1	K10-WZ	D10-WZ	49-877	49-848
EC 02 F	W	WY-30-1	K10-WY	D10-WY	49-875	49-839
EC 02 GRV	W	WYL-72-1	K20-WYL	D11-WYL		
EC 02 R	W	WZ-43-1	K10-WZ	D10-WZ	49-877	49-848
EC 02 R	W	WY-22-1	K10-WY	D10-WY	49-875	49-839
EC 02 R	W	WY-27-1	K10-WY	D10-WY	49-875	49-839
EC 020 G	W	WYL-156-1	K20-WYL	D11-WYL		
EC 020 G	W	WYL-163-1	K20-WYL	D11-WYL		
EC 020 G	W	WYL-103-1	K20-WYL	D11-WYL		
EC 020 G	W	WYL-91-1	K20-WYL	D11-WYL		
EC 020 G	W	WYL-92-1	K20-WYL	D11-WYL		
EC 020 G (NBF)	W	WYL-104-1	K20-WYL	D11-WYL		
EC 020 GRV	W	WYL-106-1	K20-WYL	D11-WYL		
EC 020 GRV	W	WYL-108-1	K20-WYL	D11-WYL		
EC 020 GRV	W	WYL-111-1	K20-WYL	D11-WYL		
EC 022 G	W	WYJ-151-1	K20-WYJ	D20-WYJ	49-882	
EC 022 G	W	WYL-64-1	K20-WYL	D11-WYL		
EC 022 G	W	WYL-76-1	K20-WYL	D11-WYL		
EC 022 GA	W	WYJ-143-1	K20-WYJ	D20-WYJ	49-882	
EC 022 GR	W	WYL-40-1	K20-WYL	D11-WYL		
EC 022 GR	W	WYL-41-1	K20-WYL	D11-WYL		
EC 022 GR	W	WYL-47-1	K20-WYL	D11-WYL		
EC 025	W	WYL-37-1	K20-WYL	D11-WYL		
EC 025	W	WYL-42-1	K20-WYL	D11-WYL		
EC 025 G	W	WYJ-211-1	K20-WYJ	D20-WYJ	49-882	
EC 025 G	W	WYL-76-1	K20-WYL	D11-WYL		
EC 025 G	W	WYL-64-1	K20-WYL	D11-WYL		
EC 025 G	W	WYJ-151-1	K20-WYJ	D20-WYJ	49-882	
EC 025 G	W	WYJ-239-1	K20-WYJ	D20-WYJ	49-882	
EC 025 G	W	WYL-36-1	K20-WYL	D11-WYL		
EC 025 G	W	WYJ-179-1	K20-WYJ	D20-WYJ	49-882	
EC 025 G	W	WYL-144-1	K20-WYL	D11-WYL		
EC 025 GA	W	WYJ-241-1	K20-WYJ	D20-WYJ	49-882	
EC 025 GA	W	WYJ-143-1	K20-WYJ	D20-WYJ	49-882	
EC 025 GF	W	WYL-147-1	K20-WYL	D11-WYL		
EC 025 GR	W	WYL-41-1	K20-WYL	D11-WYL		
EC 025 GR	W	WYL-40-1	K20-WYL	D11-WYL		
EC 025 GR	W	WYL-47-1	K20-WYL	D11-WYL		
EC 025 GRV	W	WYJ-265-1	K20-WYJ	D10-WYJ	49-882	
EC 025G	W	WYJ-379-1	K20-WYJ	D20-WYJ	49-882	

CARB = Original OEM Carburetor

B = Bing
N = Nikki
T = Tillotson
TK = Teiki
W = Walbro
Z = Zama

*** No model information available

OEM ENGINE/UNIT		WALBRO CARBURETOR			OREGON	
Model	Carb	№	Kit	Gaskets	Kit	Gaskets
Robin						
EC 028	W	WYJ-155-1	K20-WYJ	D20-WYJ	49-882	
EC 028	W	WYK-72-1	K21-WYK	D21-WYK		
EC 028 GX	W	WYJ-155-1	K20-WYJ	D20-WYJ	49-882	
EC 03	W	WA-165-1	K10-WAT	D10-WAT	49-816	49-812
EC 03 A	W	WZ-29-1	K10-WZ	D10-WZ	49-877	49-848
EC 03 F	W	WY-30-1	K10-WY	D10-WY	49-875	49-839
EC 03 FX	W	WZ-14-1	K10-WZ	D10-WZ	49-877	49-848
EC 03 FX	W	WZ-16-1	K10-WZ	D10-WZ	49-877	49-848
EC 030	W	WYK-72-1	K21-WYK	D21-WYK		
EC 030	W	WYJ-155-1	K20-WYJ	D20-WYJ	49-882	
EC 030 GX	W	WYJ-155-1	K20-WYJ	D20-WYJ	49-882	
EC 031 G	W	WYJ-295-1	K20-WYJ	D20-WYJ	49-882	
EC 031 GA	W	WYJ-280-1	K20-WYJ	D20-WYJ	49-882	
EC 04 E	W	WY-46-1	K10-WY	D10-WY	49-875	49-839
EC 04 ER	W	WYJ-172-1	K20-WYJ	D20-WYJ	49-882	
EC 04 ER	W	WYJ-165-1	K20-WYJ	D20-WYJ	49-882	
EC 04 ER	W	WYK-66-1	K21-WYK	D21-WYK		
EC 04-0601	W	WY-19-1	K10-WY	D10-WY	49-875	49-839
EC 052 ER	W	WYK-112-1	K21-WYK	D21-WYK		
EC 052 ER	W	WYJ-35-1	K20-WYJ	D20-WYJ	49-882	
EC 08	W	HDA-176-1	K20-HDA	D20-HDA	49-845	49-835
EC 08 D	W	WJ-95-1	K14-WJ	D12-WJ		
EC 08 D	W	WJ-80-1	K14-WJ	D12-WJ		
EC 08 D	W	WJ-47-1	K10-WJ	D10-WJ	49-873	49-843
EC 08 D	W	WJ-56-1	K11-WJ	D11-WJ		
EC 08 D	W	WJ-57-1	K11-WJ	D11-WJ		
EC 08 GH	W	WJ-68-1	K10-WJ	D10-WJ	49-873	49-843
EC 08 GHD	W	WJ-79-1	K14-WJ	D12-WJ		
EC 08 GHD	W	WJ-29-1	K10-WJ	D10-WJ	49-873	49-843
EC 10	W	SDC-83-1	K10-SDC	D10-SDC	49-834	49-810
EC 10	W	SDC-86-1	K10-SDC	D10-SDC	49-834	49-810
EC020GRV	W	WYL-216-1	K20-WYL	D11-WYL		
EC025GRV	W	WYL-211-1	K20-WYL	D11-WYL		
EC02R	W	WZ-22-1	K10-WZ	D10-WZ	49-877	49-848
EC025G	W	WYJ-366-1	K20-WYJ	D20-WYJ	49-882	
EC025GA-2	W	WYJ-322-1	K20-WYJ	D20-WYJ	49-882	
EH 025	W	WYL-137-1	K20-WYL	D11-WYL		
EH 025	W	WYL-125-1	K20-WYL	D11-WYL		
EH 025	W	WYL-116-1	K20-WYL	D11-WYL		
EH 025	W	WYL-117-1	K20-WYL	D11-WYL		
EH 025 P	W	WYL-152-1	K20-WYL	D11-WYL		
EH035	W	WYL-173-1	K20-WYL	D11-WYL		
EH035V	W	WYL-199-1	K20-WYL	D11-WYL		
EH075	W	WYK-260-1	K21-WYK	D21-WYK		
EH092	W	HDA-218-1	K20-HDA	D20-HDA	49-845	49-835
FL 231 VX	W	WYJ-50-1	K20-WYJ	D20-WYJ	49-882	
HC 02 ER	W	WYJ-31-1	K20-WYJ	D20-WYJ	49-882	
HT 200	W	WYJ-31-1	K20-WYJ	D20-WYJ	49-882	
LH 311	W	WYJ-32-1	K20-WYJ	D20-WYJ	49-882	
LT 752	W	WYJ-47-1	K20-WYJ	D20-WYJ	49-882	
NB 211	W	WZ-39-1	K10-WZ	D10-WZ	49-877	49-848
NB 211	W	WYJ-15-1	K20-WYJ	D20-WYJ	49-882	
NB 221	W	WYL-27-1	K20-WYL	D11-WYL		
NB 23 M	W	WY-17-1	K10-WY	D10-WY	49-875	49-839
NB 231	W	WYJ-15-1	K20-WYJ	D20-WYJ	49-882	
NB 231	W	WZ-39-1	K10-WZ	D10-WZ	49-877	49-848
NB 251	W	WYL-27-1	K20-WYL	D11-WYL		
NB 251 UL	W	WYJ-91-1	K20-WYJ	D20-WYJ	49-882	
NB 26	W	WYJ-16-1	K20-WYJ	D20-WYJ	49-882	
NB 26	W	WYJ-108-1	K20-WYJ	D20-WYJ	49-882	
NB 263	W	WYJ-62-1	K20-WYJ	D20-WYJ	49-882	
NB 281	W	WYJ-155-1	K20-WYJ	D20-WYJ	49-882	
NB 31	W	WYJ-108-1	K20-WYJ	D20-WYJ	49-882	
NB 31	W	WYJ-100-1	K20-WYJ	D20-WYJ	49-882	
NB 31	W	WYJ-16-1	K20-WYJ	D20-WYJ	49-882	
NB 31	W	WYK-65-1	K21-WYK	D21-WYK		
NB 320	W	WYK-65-1	K21-WYK	D21-WYK		
NB 321	W	WYK-65-1	K21-WYK	D21-WYK		
NB 411	W	WYK-64-1	K21-WYK	D21-WYK		
NBA 211	W	WZ-39-1	K10-WZ	D10-WZ	49-877	49-848
NBA 231	W	WYJ-15-1	K20-WYJ	D20-WYJ	49-882	
NBA 231	W	WZ-39-1	K10-WZ	D10-WZ	49-877	49-848
NBF 17	W	WY-61-1	K10-WY	D10-WY	49-875	49-839
NBF 171	W	WZ-38-1	K10-WZ	D10-WZ	49-877	49-848
NBF 171	W	WYJ-14-1	K20-WYJ	D20-WYJ	49-882	
NBF 211	W	WYJ-14-1	K20-WYJ	D20-WYJ	49-882	
NBF 231	W	WYJ-14-1	K20-WYJ	D20-WYJ	49-882	
NBH 231	W	WYJ-14-1	K20-WYJ	D20-WYJ	49-882	
NBK 232	W	WYJ-99-1	K20-WYJ	D20-WYJ	49-882	

C

Carburetor Kit Application Chart

OEM ENGINE/UNIT		WALBRO CARBURETOR			OREGON	
Model	Carb	№	Kit	Gaskets	Kit	Gaskets
Robin						
NBKA 231	W	WYF-3-1	K10-WYF	D10-WYF		
NBKA 262	W	WYJ-106-1	K20-WYJ	D20-WYJ	49-882	
NBT 415	W	WYJ-58-1	K20-WYJ	D20-WYJ	49-882	
RBC 230	W	WYJ-63-1	K20-WYJ	D20-WYJ	49-882	
RBC 250	W	WYL-24-1	K20-WYL	D11-WYL		
RBC 310	W	WYJ-63-1	K20-WYJ	D20-WYJ	49-882	
RSA 231	W	WYF-2-1	K10-WYF	D10-WYF		
RST 250	W	WYL-24-1	K20-WYL	D11-WYL		
YZ 80	W	WB-33-1	K12-WB	D12-WB		
Red Max (See Komatsu Zenoah)						
Roper						
Anti Vibe	W	SDC-73-1	K10-SDC	D10-SDC	49-834	49-810
Ryobi						
99	W	WA-62-1	K10-WAT	D10-WAT	49-816	49-812
364	Z	C1U-P7	RB-29	GND-18	49-285	
500	Z	C1U-P6	RB-29	GND-18	49-285	
530	Z	C1U-P7	RB-29	GND-18	49-285	
540	Z	C1U-P10	RB-29	GND-18	49-285	
551	W	WT-24-1	K10-WAT	D10-WAT	49-816	49-812
580	Z	C1U-P10	RB-29	GND-18	49-285	
1300	W	WA-62-1	K10-WAT	D10-WAT	49-816	49-812
1330	W	WA-62-1	K10-WAT	D10-WAT	49-816	49-812
1360	W	WA-62-1	K10-WAT	D10-WAT	49-816	49-812
5511	W	WT-24-1	K10-WAT	D10-WAT	49-816	49-812
5511	W	WT-5-1	K10-WAT	D10-WAT	49-816	49-812
280R	Z	C1U-P6	RB-29	GND-18	49-285	
310R	Z	C1U-P6	RB-29	GND-18	49-285	
310BVR	Z	C1U-P6	RB-29	GND-18	49-285	
410R	Z	C1U-P6	RB-29	GND-18	49-285	
700R	Z	C1U-P6	RB-29	GND-18	49-285	
700R	Z	C1U-P10	RB-29	GND-18	49-285	
704R	Z	C1U-P10	RB-29	GND-18	49-285	
705R	Z	C1U-P10	RB-29	GND-18	49-285	
710R	Z	C1U-P6	RB-29	GND-18	49-285	
725R	Z	C1U-P10	RB-29	GND-18	49-285	
740R	Z	C1U-P11	RB-29	GND-18	49-285	
750R	Z	C1U-P11	RB-29	GND-18	49-285	
752R	Z	C1U-P11	RB-29	GND-18	49-285	
760R	Z	C1U-P6	RB-29	GND-18	49-285	
765R	Z	C1U-P6	RB-29	GND-18	49-285	
780RB	Z	C1U-P7	RB-29	GND-18	49-285	
780RE	Z	C1U-P7	RB-29	GND-18	49-285	
790R	Z	C1U-P7	RB-29	GND-18	49-285	
975R	Z	C1Q-P8	RB-75	GND-47		
990R	Z	C1Q-P8	RB-75	GND-47		
A-31	Z	C1U-P14	RB-29	GND-18	49-285	
AC	W	WT-311-1	K10-WAT	D10-WAT	49-816	49-812
AC	W	WT-366-1	K10-WAT	D10-WAT	49-816	49-812
AC 10	W	WYL-88-1	K20-WYL	D11-WYL		
AC 2	W	WYL-110-1	K20-WYL	D11-WYL		
AC 2	W	WYL-196-1	K20-WYL	D11-WYL		
AC 2	W	WYL-196-1	K20-WYL	D11-WYL		
AC 2	W	WYL-124-1	K20-WYL	D11-WYL		
AC1	Z	C1Q-P8	RB-75	GND-47		
AC-2.1	W	WYL-187-1	K20-WYL	D11-WYL		
AC-2.1	W	WYL-196-1	K20-WYL	D11-WYL		
AC-2.1	W	WYL-196-1	K20-WYL	D11-WYL		
Cadet 3075 trimmer	Z	RB-P25	RB-128	GND-52		
Cub Cadet	W	WYL-204-1	K20-WYL	D11-WYL		
EK 2600	W	WYJ-298-1	K20-WYJ	D20-WYJ	49-882	
EKB 2600 L	W	WYJ-298-1	K20-WYJ	D20-WYJ	49-882	
G 100 R	W	WA-42-1	K10-WAT	D10-WAT	49-816	49-812
G 25 L	W	WYL-102-1	K20-WYL	D11-WYL		
G 25 L	W	WYL-107-1	K20-WYL	D11-WYL		
G22L	W	WYL-171-1	K20-WYL	D11-WYL		
G22L	W	WYL-185-1	K20-WYL	D11-WYL		
G25L	W	WYL-185-1	K20-WYL	D11-WYL		
GBC28	Z	C1U-P7	RB-29	GND-18	49-285	
GTS2816,GC31	Z	C1U-P6	RB-29	GND-18	49-285	
Hand Held	W	WTA-11-1				
Hand Held	W	WTA-7-1				
Hand Held	W	WTA-8-1				
JF2	Z	RB-JF1	RB-128	GND-52		
LE EPA TRIMMER	Z	C1U-P17	RB-98	GND-18		
LE EPA TRIMMER	Z	C1U-P21	RB-98	GND-18		

OEM ENGINE/UNIT		WALBRO CARBURETOR			OREGON	
Model	Carb	№	Kit	Gaskets	Kit	Gaskets
Ryobi						
LE EPA TRIMMER	Z	C1U-P23	RB-98	GND-18		
LE EPA TWIST START®	Z	C1Q-P22	RB-52	GND-18		
LE TWIST START®	Z	C1Q-P18	RB-52	GND-18		
LIMIT CAP MODELS	Z	C1U-P10	RB-29	GND-18	49-285	
LIMIT CAP MODELS	Z	C1U-P11	RB-29	GND-18	49-285	
LIMIT CAP MODELS	Z	C1U-P11	RB-29	GND-18	49-285	
LIMIT CAP MODELS	Z	C1U-P11	RB-29	GND-18	49-285	
MULCHINATOR	Z	C1U-P12	RB-29	GND-18	49-285	
N 28	W	WT-457-1	K10-WAT	D10-WAT	49-816	49-812
N 28	W	WT-167-1	K10-WAT	D10-WAT	49-816	49-812
N 28	W	WT-266-1	K10-WAT	D10-WAT	49-816	49-812
N 28	W	WT-400-1	K10-WAT	D10-WAT	49-816	49-812
N 28	W	WT-166-1	K10-WAT	D10-WAT	49-816	49-812
REK 285 BL	W	WT-187-1	K10-WAT	D10-WAT	49-816	49-812
TC-432	W	WYL-107-1	K20-WYL	D11-WYL		
TWIST START® trimmer	Z	C1Q-P24	RB-52	GND-18		
TWIST START® trimmer	Z	C1Q-P26	RB-52	GND-18		
Unspecified	W	WT-531-1	K20-WAT	D20-WAT	49-831	49-844
Unspecified	W	WT-565-1	K20-WAT	D20-WAT	49-831	49-844
Unspecified	W	WT-578-1	K20-WAT	D20-WAT	49-831	49-844
Unspecified	W	WT-152-1	K10-WAT	D10-WAT	49-816	49-812
Unspecified	W	WT-153-1	K10-WAT	D10-WAT	49-816	49-812
Unspecified	W	WT-124-1	K10-WAT	D10-WAT	49-816	49-812
Unspecified	W	WT-134-1	K10-WAT	D10-WAT	49-816	49-812
Unspecified	W	WT-81-1	K10-WAT	D10-WAT	49-816	49-812
Unspecified	W	WT-682-1	K20-WAT	D20-WAT	49-831	49-844
Unspecified	W	WT-617-1	K20-WAT	D20-WAT	49-831	49-844
Unspecified	W	WT-650-1	K20-WAT	D20-WAT	49-831	49-844
Unspecified	W	WT-526-1	K10-WAT	D10-WAT	49-816	49-812
Unspecified	W	WT-539-1	K10-WAT	D10-WAT	49-816	49-812
Unspecified	W	WT-454-1	K10-WAT	D10-WAT	49-816	49-812
Unspecified	W	WT-455-1	K10-WAT	D10-WAT	49-816	49-812
Unspecified	W	WT-456-1	K10-WAT	D10-WAT	49-816	49-812
Unspecified	W	WT-461-1	K10-WAT	D10-WAT	49-816	49-812
Unspecified	W	WT-275-1	K10-WAT	D10-WAT	49-816	49-812
Unspecified	W	WT-276-1	K10-WAT	D10-WAT	49-816	49-812
Unspecified	W	WT-57-1	K10-WAT	D10-WAT	49-816	49-812
Unspecified	W	WT-12-1	K10-WAT	D10-WAT	49-816	49-812
Unspecified	W	WT-123-1	K10-WAT	D10-WAT	49-816	49-812
Unspecified	W	WT-124-1	K10-WAT	D10-WAT	49-816	49-812
Unspecified	W	WT-148-1	K10-WAT	D10-WAT	49-816	49-812
Unspecified	W	WT-149-1	K10-WAT	D10-WAT	49-816	49-812
Unspecified	W	WT-25-1	K10-WAT	D10-WAT	49-816	49-812
Unspecified	W	WT-332-1	K10-WAT	D10-WAT	49-816	49-812
Unspecified	W	WT-340-1	K10-WAT	D10-WAT	49-816	49-812
Unspecified	W	WT-341-1	K10-WAT	D10-WAT	49-816	49-812
Unspecified	W	WT-62-1	K10-WAT	D10-WAT	49-816	49-812
Unspecified	W	WT-84-1	K10-WAT	D10-WAT	49-816	49-812
Unspecified	W	WT-85-1	K10-WAT	D10-WAT	49-816	49-812
Unspecified	W	WT-133-1	K10-WAT	D10-WAT	49-816	49-812
Unspecified	W	WT-11-1	K10-WAT	D10-WAT	49-816	49-812
Unspecified	W	WT-18-1	K10-WAT	D10-WAT	49-816	49-812
Unspecified	W	WT-26-1	K10-WAT	D10-WAT	49-816	49-812
Unspecified	W	WT-58-1	K10-WAT	D10-WAT	49-816	49-812
Unspecified	W	WT-59-1	K10-WAT	D10-WAT	49-816	49-812
Unspecified	W	WT-11-1	K10-WAT	D10-WAT	49-816	49-812
Sandri Garden						
CS45	W	WT-692-1	K20-WAT	D20-WAT	49-831	49-844
TS-60	W	WYJ-355-1	K20-WYJ	D20-WYJ	49-882	
Servistar						
365SSR	Z	C1U-P6	RB-29	GND-18	49-285	
375SSR	Z	C1U-P6	RB-29	GND-18	49-285	
365SSR	Z	C1U-P7	RB-29	GND-18	49-285	
375SSR	Z	C1U-P7	RB-29	GND-18	49-285	
LIMIT CAP MODELS	Z	C1U-P10	RB-29	GND-18	49-285	
LIMIT CAP MODELS	Z	C1U-P11	RB-29	GND-18	49-285	

CARB = Original OEM Carburetor

B = Bing
N = Nikki
T = Tillotson
TK = Teiki
W = Walbro
Z = Zama

*** No model information available

C

Carburetor Kit Application Chart

OEM ENGINE/UNIT		WALBRO CARBURETOR			OREGON	
Model	Carb	№	Kit	Gaskets	Kit	Gaskets
Servistar						
LIMIT CAP MODELS	Z	C1U-P11	RB-29	GND-18	49-285	
Shibaura						
M35D	Z	C1Q-SK8	RB-68	GND-17		49-880
M35D	Z	C1Q-SK9	RB-68	GND-17		49-880
M45D	Z	C1Q-SK10	RB-68	GND-17		49-880
M40D	Z	C1Q-SK10	RB-68	GND-17		49-880
M23D	Z	C1U-SK11	RB-26	GND-17	49-284	49-880
M26D	Z	C1U-SK12	RB-26	GND-17	49-284	49-880
M26D	Z	C1U-SK13	RB-26	GND-17	49-284	49-880
M36D	Z	C1U-SK14	RB-26	GND-17	49-284	49-880
M57D	Z	C1Q-SK15	RB-68	GND-17		49-880
KB45	Z	C1Q-SK16	RB-68	GND-17		49-880
ME26D	Z	C1U-SK17	RB-64	GND-41	49-900	
M23D	Z	RB-SK18	RB-107	GND-52		
Shingu Shoko						
MAC-100HD	Z	C1U-M16	RB-28	GND-18	49-866	
Shindaiwa						
350	W	HDA-29-1	K20-HDA	D10-HDA	49-845	
405	W	WA-101-1	K10-WAT	D10-WAT	49-816	49-812
406	W	WA-101-1	K10-WAT	D10-WAT	49-816	49-812
415	W	WA-101-1	K10-WAT	D10-WAT	49-816	49-812
416	W	HDA-29-1	K20-HDA	D10-HDA	49-845	
285S/EC1	W	WT-787-1	K20-WAT	D20-WAT	49-831	49-844
285S/EPA	W	WT-702-1	K20-WAT	D10-WAT	49-831	49-812
300 S	W	WYM-1-1	K20-WYMP	D20-WYMP		
300 S	W	WYM-4-1	K20-WYMP	D20-WYMP		
300S	W	WYM-4-1	K20-WYMP	D20-WYMP		
352S/EPA	W	WT-701-1	K20-WAT	D20-WAT	49-831	49-844
DH 220	W	WYL-113-1	K20-WYL	D11-WYL		
E 300	W	WYM-1-1	K20-WYMP	D20-WYMP		
E 304 D	W	WT-572-1	K20-WAT	D20-WAT	49-831	49-844
E 305 AV	W	WA-44-1	K10-WAT	D10-WAT	49-816	49-812
E 350 AV	W	WA-115-1	K10-WAT	D10-WAT	49-816	49-812
E 352	W	WT-303-1	K20-WAT	D20-WAT	49-831	49-844
E 353 D	W	WT-571-1	K20-WAT	D20-WAT	49-831	49-844
E 357	W	WT-382-1	K10-WAT	D10-WAT	49-816	49-812
E 357	W	WT-301-1	K10-WAT	D10-WAT	49-816	49-812
E 360	W	WT-89-1	K20-WAT	D10-WAT	49-831	49-812
E 360	W	WT-384-1	K20-WAT	D10-WAT	49-831	49-812
E 361	W	WT-229-1	K20-WAT	D10-WAT	49-831	49-812
E 377	W	WT-384-1	K20-WAT	D10-WAT	49-831	49-812
E 380	W	WT-229-1	K20-WAT	D10-WAT	49-831	49-812
E 381	W	WT-336-1	K20-WAT	D10-WAT	49-831	49-812
E 393	W	WT-401-1	K20-WAT	D10-WAT	49-831	49-812
E 393	W	WT-508-1	K20-WAT	D10-WAT	49-831	49-812
E 394	W	WT-508-1	K20-WAT	D10-WAT	49-831	49-812
E 400	W	HDA-79-1	K20-HDA	D10-HDA	49-845	
E 410	W	WA-178-1	K10-WAT	D10-WAT	49-816	49-812
E 415 AV	W	WA-84-1	K10-WAT	D10-WAT	49-816	49-812
E 440 AV	W	WA-140-1	K10-WAT	D10-WAT	49-816	49-812
E 445	W	WA-178-1	K10-WAT	D10-WAT	49-816	49-812
E 450	W	WA-101-1	K10-WAT	D10-WAT	49-816	49-812
E 480 AV	W	WA-140-1	K10-WAT	D10-WAT	49-816	49-812
E 485	W	WA-178-1	K10-WAT	D10-WAT	49-816	49-812
E 488	W	HDA-79-1	K20-HDA	D10-HDA	49-845	
E 488	W	HDA-165-1	K22-HDA	D22-HDA	49-853	49-852
E 575	W	HDA-50-1	K20-HDA	D10-HDA	49-845	
E 577	W	HDA-132-1	K23-HDA	D20-HDA		49-835
E 680 AV	W	HDA-29-1	K20-HDA	D10-HDA	49-845	
E 757	W	HDA-123-1	K23HDA	D20-HDA		49-835
E 757/EPA	W	HDA-181-1	K24-HDA	D24-HDA		
E1029S	W	WT-642-1	K20-WAT	D20-WAT	49-831	49-844
E1036S	W	WT-641-1	K20-WAT	D20-WAT	49-831	49-844
E1038S	W	WT-844-1	K20-WAT	D20-WAT	49-831	49-844
E395D	W	WT-574-1	K20-WAT	D20-WAT	49-831	49-844

CARB = Original OEM Carburetor

B = Bing
N = Nikki
T = Tillotson
TK = Teiki
W = Walbro
Z = Zama

*** No model information available

OEM ENGINE/UNIT		WALBRO CARBURETOR			OREGON	
Model	Carb	№	Kit	Gaskets	Kit	Gaskets
Shindaiwa						
EB 240	W	WYJ-209-1	K20-WYJ	D20-WYJ	49-882	
EB 240	W	WYJ-162-1	K20-WYJ	D20-WYJ	49-882	
EB 240	W	WYJ-96-1	K20-WYJ	D20-WYJ	49-882	
EB 45	W	WT-40-1	K10-WAT	D10-WAT	49-816	49-812
EB 460	W	WYJ-141-1	K20-WYJ	D20-WYJ	49-882	
EB 480	W	WYJ-147-1	K20-WYJ	D20-WYJ	49-882	
EB 501	W	WYJ-285-1	K20-WYJ	D20-WYJ	49-882	
EC 350	W	HDA-29-1	K20-HDA	D10-HDA	49-845	
EC 7500	W	HDA-189-1	K21-HDA	D20-HDA		49-835
EC 757	W	HDA-157-1	K23-HDA	D20-HDA		49-835
ECD 577	W	HDA-140-1	K21-HDA	D10-HDA		
ES 300 S	W	WT-378-1	K10-WAT	D10-WAT	49-816	49-812
F 18	W	WYP-1-1	K20-WYMP	D20-WYMP		
F 20	W	WA-135-1	K10-WAT	D10-WAT	49-816	49-812
F 21	W	WY-24-1	K10-WY	D10-WY	49-875	49-839
HT 20	W	WYJ-131-1	K20-WYJ	D20-WYJ	49-882	
HT 234	W	WYJ-176-1	K20-WYJ	D20-WYJ	49-882	
K 35	W	WYM-3-1	K20-WYMP	D20-WYMP		
R 20 L	W	WZ-6-1	K10-WZ	D10-WZ	49-877	49-848
R 20 L	W	WZ-8-1	K10-WZ	D10-WZ	49-877	49-848
R 220	W	WYL-84-1	K20-WYL	D11-WYL		
R 23	W	WZ-41-1	K10-WZ	D10-WZ	49-877	49-848
R 2400	W	WYK-133-1	K21-WYK	D21-WYK		
R 25	W	WY-43-1	K10-WY	D10-WY	49-875	49-839
RE 18	W	WYP-1-1	K20-WYMP	D20-WYMP		
RE 20	W	WA-135-1	K10-WAT	D10-WAT	49-816	49-812
RE 21	W	WY-24-1	K10-WY	D10-WY	49-875	49-839
RK 231 S	W	WYJ-248-1	K20-WYJ	D20-WYJ	49-882	
S 200	W	WYL-58-1	K20-WYL	D11-WYL		
S 220 DX	W	WYL-58-1	K20-WYL	D11-WYL		
S 230	W	WYL-26-1	K20-WYL	D11-WYL		
S 230	W	WYL-19-1	K20-WYL	D11-WYL		
S 230	W	WYL-126-1	K20-WYL	D11-WYL		
S 230	W	WYL-122-1	K20-WYL	D11-WYL		
S 230 P	W	WYK-61-1	K21-WYK	D21-WYK		
S 232	W	WYK-68-1	K21-WYK	D21-WYK		
S 234	W	WYK-68-1	K21-WYK	D21-WYK		
S 25 H	W	WY-43-1	K10-WY	D10-WY	49-875	49-839
S 25 M	W	WY-43-1	K10-WY	D10-WY	49-875	49-839
SG 23 FS	W	WYF-1-1	K10-WYF	D10-WYF		
SHT230	W	WYJ-176-1	K20-WYJ	D20-WYJ	49-882	
SK 23 FS	W	WYF-1-1	K10-WYF	D10-WYF		
SK 231	W	WYK-145-1	K21-WYK	D21-WYK		
SK 231	W	WYJ-158-1	K20-WYJ	D20-WYJ	49-882	
SK 231	W	WYK-145-1	K21-WYK	D21-WYK		
SK 231S	W	WYK-145-1	K21-WYK	D21-WYK		
SK 231S	W	WYK-145-1	K21-WYK	D21-WYK		
SK 251 F	W	WYF-8-1	K10-WYF	D10-WYF		
SSE300S	W	WYM-5-1	K20-WYMP	D20-WYMP		
SSE360S	W	WYM-6-1	K20-WYMP	D20-WYMP		
T 18	W	WYP-1-1	K20-WYMP	D20-WYMP		
T 20	W	WZ-8-1	K10-WZ	D10-WZ	49-877	49-848
T2500	W	WYL-169-1	K20-WYL	D11-WYL		
T272	W	WYJ-329-1	K20-WYJ	D20-WYJ	49-882	
T3410	W	WYL-208-1	K20-WYL	D11-WYL		
Unspecified	W	WT-238-1	K20-WAT	D20-WAT	49-831	49-844
XS 200	W	WYL-58-1	K20-WYL	D11-WYL		
XS 2400	W	WYK-133-1	K21-WYK	D21-WYK		
XT 2500	W	WYL-162-1	K20-WYL	D11-WYL		
Singer (See Ryobi)						
Snapper						
P212-CST	Z	C1S-M8	RB-10	GND-32	49-862	49-858
P212-CST	Z	C1U-M20	RB-28	GND-18	49-866	
P212	Z	C1U-M16	RB-28	GND-18	49-866	
P213	Z	C1U-M16	RB-28	GND-18	49-866	
P215	Z	C1U-M16	RB-28	GND-18	49-866	
Solo						
108	W	HDA-147-1	K12-HDA	D11-HDA		
108	W	HDA-156-1	K20-HDA	D10-HDA	49-845	
127	W	WT-365-1	K20-WAT	D20-WAT	49-831	49-844
130	W	WT-365-1	K20-WAT	D20-WAT	49-831	49-844
134	W	HDA-125-1	K20-HDA	D10-HDA	49-845	
140	W	HDA-125-1	K20-HDA	D10-HDA	49-845	
414	W	WYJ-128-1	K20-WYJ	D20-WYJ	49-882	

C

Carburetor Kit Application Chart

OEM ENGINE/UNIT		WALBRO CARBURETOR			OREGON	
Model	Carb	№	Kit	Gaskets	Kit	Gaskets
Solo						
470	W	WT-552-1	K10-WAT	D10-WAT	49-816	49-812
600	W	HDC-52-1	K10-HDC	D10-HDC	49-833	49-807
603	W	WJ-12-1	K10-WJ	D10-WJ	49-873	49-843
603	W	WJ-19-1	K10-WJ	D10-WJ	49-873	49-843
603	W	WJ-33-1	K11-WJ	D11-WJ		
605	W	HDC-52-1	K10-HDC	D10-HDC	49-833	49-807
606	W	HDC-52-1	K10-HDC	D10-HDC	49-833	49-807
610	T	HU-62A	RK-14HU	DG-3HU	49-805	49-804
610	W	WA-34-1	K10-WAT	D10-WAT	49-816	49-812
611	W	WA-34-1	K10-WAT	D10-WAT	49-816	49-812
616	W	HDC-50-1	K10-HDC	D10-HDC	49-833	49-807
631	W	HDC-29-1	K10-HDC	D10-HDC	49-833	49-807
634	W	HDA-111-1	K20-HDA	D10-HDA	49-845	
636	W	WT-577-1	K20-WAT	D20-WAT	49-831	49-844
636	W	WT-513-1	K20-WAT	D10-WAT	49-831	49-812
637	W	WT-838-1	K20-WAT	D20-WAT	49-831	49-844
639	W	HDA-170-1	K22-HDA	D22-HDA	49-853	49-852
639	W	HDA-126-1	K20-HDA	D10-HDA	49-845	
639	W	HDA-127-1	K10-HDA	D10-HDA		
641	W	HDA-111-1	K20-HDA	D10-HDA	49-845	
644	Z	C3A-G1	RB-30	GND-20		
644	W	HDA-103-1	K20-HDA	D10-HDA	49-845	
644	W	HDA-61-1	K20-HDA	D10-HDA	49-845	
644	W	HDA-74-1	K20-HDA	D10-HDA	49-845	
645	W	HDA-126-1	K20-HDA	D10-HDA	49-845	
645	W	HDA-127-1	K10-HDA	D10-HDA		
645	W	HDA-170-1	K22-HDA	D22-HDA	49-853	49-852
647	T	HU-63B	RK-14HU	DG-3HU	49-805	49-804
647	W	WT-108-1	K20-WAT	D10-WAT	49-831	49-812
647	W	WT-42-1	K20-WAT	D10-WAT	49-831	49-812
650	T	HS-110A	RK-23HS	DG-5HS	49-803	49-802
651	W	HDA-170-1	K22-HDA	D22-HDA	49-853	49-852
651	W	HDA-127-1	K10-HDA	D10-HDA		
654	W	WT-108-1	K20-WAT	D10-WAT	49-831	49-812
654	W	WT-42-1	K20-WAT	D10-WAT	49-831	49-812
660	T	HS-110A	RK-23HS	DG-5HS	49-803	49-802
662	W	HDA-130-1	K20-HDA	D10-HDA	49-845	
662	W	HDA-57-1	K20-HDA	D10-HDA	49-845	
662	W	HDA-73-1	K20-HDA	D10-HDA	49-845	
662	W	HDA-158-1	K22-HDA	D22-HDA	49-853	49-852
667	W	HDA-158-1	K22-HDA	D22-HDA	49-853	49-852
667	W	HDA-130-1	K20-HDA	D10-HDA	49-845	
667	W	HDA-57-1	K20-HDA	D10-HDA	49-845	
667	W	HDA-73-1	K20-HDA	D10-HDA	49-845	
670	W	WJ-18-1	K10-WJ	D10-WJ	49-873	49-843
670	W	WJ-32-1	K11-WJ	D11-WJ		
680	W	WJ-18-1	K10-WJ	D10-WJ	49-873	49-843
680	W	WJ-32-1	K11-WJ	D11-WJ		
680	W	WJ-3-1	K10-WJ	D10-WJ	49-873	49-843
690	W	WJ-19-1	K10-WJ	D10-WJ	49-873	49-843
690	W	WJ-33-1	K11-WJ	D11-WJ		
22 cc	W	WT-602-1	K20-WAT	D20-WAT	49-831	49-844
25 cc	W	WT-602-1	K20-WAT	D20-WAT	49-831	49-844
25 cc	W	WT-514-1	K20-WAT	D20-WAT	49-831	49-844
25 cc	W	WT-386-1	K20-WAT	D11-WAT	49-831	
440/441	W	WT-663-1	K20-WAT	D20-WAT	49-831	49-844
600 Series	W	HDA-10-1	K20-HDA	D10-HDA	49-845	
FS 126	W	WT-218-1	K20-WAT	D10-WAT	49-831	49-812
Multimot 100	W	WA-98-1	K10-WAT	D10-WAT	49-816	49-812
Multimot 100	W	WT-106-1	K10-WAT	D10-WAT	49-816	49-812
Multimot 100	W	WT-64-1	K10-WAT	D10-WAT	49-816	49-812
Multimot 101	W	WT-205-1	K10-WAT	D10-WAT	49-816	49-812
Unspecified	W	HDA-155-1	K22-HDA	D22-HDA	49-853	49-852
Stihl						
8	T	HL-166C		DG-5HL		49-801
9	Z	C1S-S1	RB-11	GND-7	49-863	49-859
9	W	WA-99-1	K10-WAT	D10-WAT	49-816	49-812
10	Z	C1S-S1	RB-11	GND-7	49-863	49-859
10	W	WA-99-1	K10-WAT	D10-WAT	49-816	49-812
11	Z	C1S-S1	RB-11	GND-7	49-863	49-859
11	W	WA-99-1	K10-WAT	D10-WAT	49-816	49-812
12	Z	C1S-S1	RB-11	GND-7	49-863	49-859
15	W	HDC-17-1	K10-HDC	D10-HDC	49-833	49-807
17	Z	C1Q-S43	RB-77	GND-33		49-884
17	Z	C1Q-S57	RB-77	GND-33		49-884
18	Z	C1Q-S43	RB-77	GND-33		49-884
18	Z	C1Q-S57	RB-77	GND-33		49-884
20	W	WA-86-1	K10-WAT	D10-WAT	49-816	49-812

OEM ENGINE/UNIT		WALBRO CARBURETOR			OREGON	
Model	Carb	№	Kit	Gaskets	Kit	Gaskets
Stihl						
21	Z	C1Q-S11	RB-97	GND-35		
23	Z	C1Q-S11	RB-97	GND-35		
24	W	WT-195-1	K10-WAT	D10-WAT	49-816	49-812
25	Z	C1Q-S11	RB-97	GND-35		
26	W	WT-394-318	K20-WAT	D10-WAT	49-831	49-812
26	W	WT-22-1	K10-WAT	D10-WAT	49-816	49-812
26	W	WT-581-1	K26-WAT	D26-WAT		
26	W	WT-395-1	K20-WAT	D10-WAT	49-831	49-812
32	W	WA-49-1	K10-WAT	D10-WAT	49-816	49-812
34	Z	C3A-S19	RB-31	GND-21	49-899	49-893
34	Z	C3A-S31	RB-31	GND-21	49-899	49-893
34	Z	C3A-S38	RB-31	GND-21	49-899	49-893
36	Z	C3A-S52	RB-31	GND-21	49-899	49-893
38	T	HK-42B		DG-1HK		49-800
39	W	HD-21-318	K10-HD	D10-HD	49-849	49-847
42	W	WS-3-1	K10-WS	D10-WS		49-814
42	W	WS-13-1	K10-WS	D10-WS		49-814
42	W	WS-13-1	K10-WS	D10-WS		49-814
44	Z	C3M-S12	RB-36	GND-25	49-867	49-857
44	Z	C3M-S20	RB-36	GND-25	49-867	49-857
44	W	HD-10-1	K10-HD	D10-HD	49-849	49-847
44	W	HD-11-318	K10-HD	D10-HD	49-849	49-847
46	W	HD-16-318	K10-HD	D10-HD	49-849	49-847
46	W	HD-24-1	K10-HD	D10-HD	49-849	49-847
46	W	HD-24-318	K10-HD	D10-HD	49-849	49-847
46	W	HD-8-318	K10-HD	D10-HD	49-849	49-847
46	W	HD-9-1	K10-HD	D10-HD	49-849	49-847
51	W	WS-1-1	K10-WS	D10-WS		49-814
51	W	WS-11-1	K10-WS	D10-WS		49-814
64	W	WJ-34-1	K10-WJ	D10-WJ	49-873	49-843
64	W	WJ-48-1	K11-WJ	D11-WJ		
64	W	WJ-6-1	K11-WJ	D11-WJ		
64	W	WJ-10-1	K11-WJ	D11-WJ		
64	W	WJ-76-318	K13-WJ	D11-WJ		
66	W	WJ-76-318	K13-WJ	D11-WJ		
66	W	WJ-66-1	K11-WJ	D11-WJ		
66	W	WJ-86-318	K15-WJ	D11-WJ		
66	W	WJ-48-1	K11-WJ	D11-WJ		
70	T			DG3HL		49-813
70	T	HL-324A		DG-5HL		49-801
70	T	HL-331A		DG-5HL		49-801
70	Z	LB-S9	RB-42	GND-30	49-879	
75	W	WS-1-1	K10-WS	D10-WS		49-814
75	W	WS-11-1	K10-WS	D10-WS		49-814
76	W	WS-11-1	K10-WS	D10-WS		49-814
90	Z	LB-S9	RB-42	GND-30	49-879	
1111	W	WJ-112-318	K15-WJ	D12-WJ		
1120	W	WT-21-1	K10-WAT	D10-WAT	49-816	49-812
1121	W	WT-581-1	K26-WAT	D26-WAT		
1121	W	WT-195-1	K10-WAT	D10-WAT	49-816	49-812
1121	W	WT-22-1	K10-WAT	D10-WAT	49-816	49-812
1121	W	WT-394-318	K20-WAT	D10-WAT	49-831	49-812
1121	W	WT-395-1	K20-WAT	D10-WAT	49-831	49-812
1122	W	WJ-10-1	K11-WJ	D11-WJ		
1122	W	WJ-35-1	K10-WJ	D10-WJ	49-873	49-843
1122	W	WJ-41-318	K10-WJ	D10-WJ	49-873	49-843
1122	W	WJ-42-1	K10-WJ	D10-WJ	49-873	49-843
1122	W	WJ-52-1	K11-WJ	D11-WJ		
1122	W	WJ-66-1	K11-WJ	D11-WJ		
1122	W	WJ-62-1	K11-WJ	D11-WJ		
1122	W	WJ-86-318	K15-WJ	D11-WJ		
1122	W	WJ-76-318	K13-WJ	D11-WJ		
1127	W	HD-18-318	K10-HD	D10-HD	49-849	49-847
1127	W	HD-19-318	K10-HD	D10-HD	49-849	49-847
1128	W	HD-11-318	K10-HD	D10-HD	49-849	49-847
1129	Z	C1Q-S61	RB-69	GND-39	49-904	
1137	Z	C1Q-S103	RB-69	GND-39	49-904	
1137	Z	C1Q-S104	RB-69	GND-39	49-904	
1138	W	HD-41-318	K20-HD	D20-HD		
4116	W	HD-1-1	K10-HD	D10-HD	49-849	49-847
4128	W	WT-446-1	K20-WAT	D10-WAT	49-831	49-812

CARB = Original OEM Carburetor

B = Bing
N = Nikki
T = Tillotson
TK = Teiki
W = Walbro
Z = Zama

*** No model information available

Carburetor Kit Application Chart

OEM ENGINE/UNIT		WALBRO CARBURETOR			OREGON	
Model	Carb	№	Kit	Gaskets	Kit	Gaskets
Stihl						
4128	W	WT-446-1	K20-WAT	D10-WAT	49-831	49-812
4130	W	WT-327-1	K20-WAT	D10-WAT	49-831	49-812
4130	W	WT-444-1	K20-WAT	D10-WAT	49-831	49-812
4130	W	WT-160-1	K20-WAT	D20-WAT	49-831	49-844
4140	Z	C1Q-S71	RB-100	GND-56		
4180	Z	C1Q-S72	RB-97	GND-55		
4180	Z	C1Q-S88	RB-114	GND-55	49-287	
4203	W	HD-2-1	K10-HD	D10-HD	49-849	49-847
4203	W	WT-230-1	K10-WAT	D10-WAT	49-816	49-812
4203	W	WT-230-1	K10-WAT	D10-WAT	49-816	49-812
4203	W	WT-230-1	K10-WAT	D10-WAT	49-816	49-812
4203	W	WT-230-1	K10-WAT	D10-WAT	49-816	49-812
4228	Z	C1Q-S54	RB-84	GND-50		
4228	Z	C1Q-S67	RB-96	GND-53		
4237	Z	C1Q-S105	RB-99	GND-56		
4237	Z	C1Q-S111	RB-99	GND-56		
008S	Z	LA-S8	RB-42	GND-30	49-879	
009 AV	W	WA-56-1	K10-WAT	D10-WAT	49-816	49-812
010 AV	W	WA-56-1	K10-WAT	D10-WAT	49-816	49-812
011 AV	W	WA-99-1	K10-WAT	D10-WAT	49-816	49-812
015 AV	W	HDC-17-1	K10-HDC	D10-HDC	49-833	49-807
015 L	W	HDC-17-1	K10-HDC	D10-HDC	49-833	49-807
019T	Z	C1Q-S46	RB-72	GND-35		
019T	Z	C1Q-S37	RB-72	GND-35		
020 AV	W	WA-1-1	K10-WAT	D10-WAT	49-816	49-812
020 AV	W	WA-86-1	K10-WAT	D10-WAT	49-816	49-812
020 AVPS	W	WA-86-1	K10-WAT	D10-WAT	49-816	49-812
020AVPSEQ	T	HU-7A	RK-14HU	DG-3HU	49-805	49-804
020T	Z	C1Q-S16	RB-41	GND-35	49-898	
024 AV	W	WT-110-318	K20-WAT	D10-WAT	49-831	49-812
024 AV	W	WT-22-1	K10-WAT	D10-WAT	49-816	49-812
024 S	W	WT-22-1	K10-WAT	D10-WAT	49-816	49-812
024AVEQ	T	HU-54F	RK-14HU	DG-3HU	49-805	49-804
024S AV	W	WT-110-318	K20-WAT	D10-WAT	49-831	49-812
028 AV	W	WA-128-1	K10-WAT	D10-WAT	49-816	49-812
028AVEQ	T	HU-40D	RK-14HU	DG-3HU	49-805	49-804
030AV	T	HU-3G	RK-14HU	DG-3HU	49-805	49-804
031 AV	W	WA-2-1	K10-WAT	D10-WAT	49-816	49-812
031 AV	W	WA-2-1	K10-WAT	D10-WAT	49-816	49-812
031AV	T	HU-3G	RK-14HU	DG-3HU	49-805	49-804
032 AV	W	WA-49-1	K10-WAT	D10-WAT	49-816	49-812
032AVE	T	HU-51B	RK-14HU	DG-3HU	49-805	49-804
034 SUPER	Z	C3A-S4	RB-31	GND-21	49-899	49-893
034 THERMOSTAT	Z	C3A-S25	RB-31	GND-21	49-899	49-893
034 THERMOSTAT	Z	C3A-S26	RB-31	GND-21	49-899	49-893
034AVEQ	T	HK-43B				49-800
036 ARCTIC	Z	C3A-S27	RB-31	GND-21	49-899	49-893
036 PRO	Z	C3A-S39	RB-31	GND-21	49-899	49-893
036QS	Z	C3A-S39	RB-31	GND-21	49-899	49-893
038AVMEQ	T	HK-5A		DG-1HK		49-800
044 (EARLY)	Z	C3M-S5 D-G	RB-36	GND-26	49-867	
044 AUTO CHOKE	Z	C3M-S21	RB-36	GND-25	49-867	49-857
044 CARB HEATING	Z	C3M-S23	RB-36	GND-25	49-867	49-857
044 CARB HEATING	Z	C3M-S24	RB-36	GND-25	49-867	49-857
044 P.T.C.CARB HTG	Z	C3M-S22	RB-36	GND-25	49-867	49-857
048 AV	W	WS-14-1	K10-WS	D10-WS		49-814
051 AV	W	WS-11-1	K10-WS	D10-WS		49-814
066 Magnum	W	WJ-51-318	K11-WJ	D11-WJ		
066 Magnum	W	WJ-66-1	K11-WJ	D11-WJ		
066 Magnum	W	WJ-62-1	K11-WJ	D11-WJ		
075 AV	W	WS-11-1	K10-WS	D10-WS		49-814
08 SEQ	T	HL-292C		DG-5HL		49-801
090AVR	T	HL-324A		DG-5HL		49-801
1133/MS280	W	HD-39-318	K20-HD	D20-HD		
4140 CA Version	Z	C1Q-S62	RB-93	GND-53		
4180 EMU trimmer	Z	C1Q-S81	RB-114	GND-55	49-287	
4223/TS400	W	WJ-108-318	K15-WJ	D11-WJ		
4229 BG45	Z	C1Q-S73	RB-100	GND-56		
4314 BT45	Z	C1Q-S74	RB-106	GND-58		
4601 EMU Mini-Tiller	Z	C1Q-S79	RB-100	GND-56		
4601 MM55 Tiller	Z	C1Q-S93	RB-100	GND-56		

CARB = Original OEM Carburetor

B = Bing
N = Nikki
T = Tillotson
TK = Teiki
W = Walbro
Z = Zama

*** No model information available

OEM ENGINE/UNIT		WALBRO CARBURETOR			OREGON	
Model	Carb	№	Kit	Gaskets	Kit	Gaskets
Stihl						
BG4227	Z	C1Q-S47	RB-85	GND-51		
BG45	Z	C1Q-S48	RB-89	GND-50	49-288	
BG45	Z	C1Q-S64	RB-89	GND-50	49-288	
BG45	Z	C1Q-S112	RB-148	GND-56		
BG46	Z	C1Q-S48	RB-89	GND-50	49-288	
BG46	Z	C1Q-S64	RB-89	GND-50	49-288	
BG55	Z	C1Q-S48	RB-89	GND-50	49-288	
BG55	Z	C1Q-S64	RB-89	GND-50	49-288	
BG55	Z	C1Q-S50	RB-79	GND-39		
BG55	Z	C1Q-S55	RB-89	GND-50	49-288	
BG65	Z	C1Q-S50	RB-79	GND-39		
BG65	Z	C1Q-S55	RB-89	GND-50	49-288	
BG75	Z	C1Q-S30	RB-66	GND-28	49-892-0	49-883
BG85	Z	C1Q-S50	RB-79	GND-39		
BG85	Z	C1Q-S55	RB-89	GND-50	49-288	
BG85	Z	C1Q-S68	RB-99	GND-56		
BR 320	W	HD-2-1	K10-HD	D10-HD	49-849	49-847
BR 320 L	W	WT-331-1	K10-WAT	D10-WAT	49-816	49-812
BR 320 L	W	WT-230-1	K10-WAT	D10-WAT	49-816	49-812
BR 320 L	W	WT-331-1	K10-WAT	D10-WAT	49-816	49-812
BR 400	W	HD-7-1	K10-HD	D10-HD	49-849	49-847
BR 420	W	HD-28-1	K10-HD	D10-HD	49-849	49-847
BR106	Z	C1Q-SK6	RB-40	GND-28	49-907	49-883
BR500	Z	C1Q-S99	RB-134	GND-72		
BR600	Z	C1Q-S100	RB-134	GND-72		
BRS50	Z	C1Q-S101	RB-134	GND-72		
BT106	Z	C1Q-SK4	RB-40	GND-28	49-907	49-883
BT106	Z	C1Q-SK5	RB-40	GND-28	49-907	49-883
E 26 D	W	WYK-139-1	K21-WYK	D21-WYK		
EX162	W	WYK-248-1	K21-WYK	D21-WYK		
FC55	Z	C1Q-S44	RB-66	GND-28	49-892-0	49-883
FC75	Z	C1Q-S28	RB-66	GND-28	49-892-0	49-883
FC75	Z	C1Q-S45	RB-66	GND-28	49-892-0	49-883
FC75	Z	C1Q-S56	RB-85	GND-51		
FC85	Z	C1Q-S45	RB-66	GND-28	49-892-0	49-883
FH75	Z	C1Q-S28	RB-66	GND-28	49-892-0	49-883
FH75	Z	C1Q-S45	RB-66	GND-28	49-892-0	49-883
FH75	Z	C1Q-S56	RB-85	GND-51		
FS 22 RP	W	WYK-16-1	K21-WYK	D21-WYK		
FS 22 RP	W	WYK-16-1	K21-WYK	D21-WYK		
FS 220	W	WT-51-1	K10-WAT	D10-WAT	49-816	49-812
FS 220	W	WT-70-1	K20-WAT	D10-WAT	49-831	49-812
FS 360	W	HD-1-1	K10-HD	D10-HD	49-849	49-847
FS 450	W	WT-446-1	K20-WAT	D10-WAT	49-831	49-812
FS 500	W	HD-23-318	K10-HD	D10-HD	49-849	49-847
FS 550	W	HD-23-318	K10-HD	D10-HD	49-849	49-847
FS 550	W	HD-22-318	K10-HD	D10-HD	49-849	49-847
FS 68	W	WT-204-1	K10-WAT	D10-WAT	49-816	49-812
FS 72	W	WT-393-1	K10-WAT	D10-WAT	49-816	49-812
FS 74	W	WT-393-1	K10-WAT	D10-WAT	49-816	49-812
FS 76	W	WT-393-1	K10-WAT	D10-WAT	49-816	49-812
FS 78	W	WT-204-1	K10-WAT	D10-WAT	49-816	49-812
FS106	Z	C1Q-SK5	RB-40	GND-28	49-907	49-883
FS-106	Z	C1S-SK1	RB-13	GND-7		49-859
FS-106	Z	C1S-SK2	RB-13	GND-7		49-859
FS108	Z	C1Q-SK5	RB-40	GND-28	49-907	49-883
FS-108	Z	C1Q-SK4	RB-40	GND-28	49-907	49-883
FS108 (CARB)	Z	C1Q-SK7	RB-40	GND-28	49-907	49-883
FS120	Z	C1Q-S51	RB-40	GND-28	49-907	49-883
FS120	Z	C1Q-S82	RB-89	GND-50	49-288	
FS130R	Z	C1Q-S98	RB-132	GND-72		
FS160	Z	C1S-S2	RB-120	GND-7		49-859
FS180	Z	C1S-S2	RB-120	GND-7		49-859
FS200	Z	C1Q-S83	RB-89	GND-50	49-288	
FS200	Z	C1Q-S51D	RB-40	GND-28	49-907	49-883
FS220	Z	C1S-S3	RB-13	GND-7		49-859
FS22RP	W	WYK-16-1	K21-WYK	D21-WYK		
FS22RP	W	WYK-16-1	K21-WYK	D21-WYK		
FS250	Z	C1Q-S51D	RB-40	GND-28	49-907	49-883
FS250	Z	C1Q-S83	RB-89	GND-50	49-288	
FS280	Z	C1S-S3	RB-13	GND-7		49-859
FS300	Z	C1Q-S35	RB-40	GND-28	49-907	49-883
FS300	Z	C1Q-S36	RB-40	GND-28	49-907	49-883
FS300	Z	C1Q-S51D	RB-40	GND-28	49-907	49-883
FS300	Z	C1Q-S82	RB-89	GND-50	49-288	
FS350	Z	C1Q-S35	RB-40	GND-28	49-907	49-883
FS350	Z	C1Q-S36	RB-40	GND-28	49-907	49-883
FS350	Z	C1Q-S83	RB-89	GND-50	49-288	
FS38	Z	C1Q-S97	RB-100	GND-56		
FS38	Z	C1Q-S95	RB-100	GND-56		

C

Carburetor Kit Application Chart

OEM ENGINE/UNIT		WALBRO CARBURETOR			OREGON	
Model	Carb	№	Kit	Gaskets	Kit	Gaskets
Stihl						
FS400	Z	C1Q-S34	RB-40	GND-28	49-907	49-883
FS4128	Z	C1Q-S113	RB-147	GND-50	49-288	
FS4137	Z	C1Q-S41B	RB-85	GND-51		
FS45	Z	C1Q-S66	RB-84	GND-50	49-288	
FS450	Z	C1Q-S33	RB-40	GND-28	49-907	49-883
FS450	Z	C1Q-S34	RB-40	GND-28	49-907	49-883
FS46	Z	C1Q-S44	RB-66	GND-28	49-892-0	49-883
FS46	Z	C1Q-S53	RB-85	GND-51		
FS46	Z	C1Q-S66	RB-84	GND-50	49-288	
FS55	Z	C1Q-S44	RB-66	GND-28	49-892-0	49-883
FS55	Z	C1Q-S53	RB-85	GND-51		
FS55	Z	C1Q-S58	RB-89	GND-50	49-288	
FS55	Z	C1Q-S66	RB-84	GND-50	49-288	
FS75	Z	C1Q-S28	RB-66	GND-28	49-892-0	49-883
FS75	Z	C1Q-S45	RB-66	GND-28	49-892-0	49-883
FS75	Z	C1Q-S63	RB-84	GND-50		
FS80	Z	C1Q-S28	RB-66	GND-28	49-892-0	49-883
FS80	Z	C1Q-S45	RB-66	GND-28	49-892-0	49-883
FS80	Z	C1Q-S63	RB-84	GND-50		
FS85	Z	C1Q-S28	RB-66	GND-28	49-892-0	49-883
FS85	Z	C1Q-S45	RB-66	GND-28	49-892-0	49-883
FS85	Z	C1Q-S63	RB-84	GND-50		
FS90	Z	C1Q-S110	RB-97	GND-55		
H 20	W	WT-219-1	K10-WAT	D10-WAT	49-816	49-812
H22 D	W	WYK-20-1	K21-WYK	D21-WYK		
H 22 D	W	WYK-39-1	K21-WYK	D21-WYK		
H 22 D	W	WYL-18-1	K20-WYL	D11-WYL		
H 24	W	WT-219-1	K10-WAT	D10-WAT	49-816	49-812
H 24 D	W	WYJ-180-1	K20-WYJ	D20-WYJ	49-882	
H 26 D	W	WYJ-180-1	K20-WYJ	D20-WYJ	49-882	
H 31	W	WT-219-1	K10-WAT	D10-WAT	49-816	49-812
H 35	W	WT-219-1	K10-WAT	D10-WAT	49-816	49-812
HB26	W	WT-768-1	K10-WAT	D10-WAT	49-816	49-812
HL45	Z	C1Q-S44	RB-66	GND-28	49-892-0	49-883
HL45	Z	C1Q-S53	RB-85	GND-51		
HL75	Z	C1Q-S28	RB-66	GND-28	49-892-0	49-883
HL75	Z	C1Q-S45	RB-66	GND-28	49-892-0	49-883
HL75	Z	C1Q-S56	RB-85	GND-51		
HS 151	W	HDC-17-1	K10-HDC	D10-HDC	49-833	49-807
HS45	Z	C1Q-S49	RB-83	GND-39		
HS45	Z	C1Q-S70	RB-100	GND-56		
HS75	Z	C1Q-S29	RB-66	GND-28	49-892-0	49-883
HS75	Z	C1Q-S42	RB-85	GND-51		
HS80	Z	C1Q-S29	RB-66	GND-28	49-892-0	49-883
HS80	Z	C1Q-S42	RB-85	GND-51		
HS85	Z	C1Q-S29	RB-66	GND-28	49-892-0	49-883
HS85	Z	C1Q-S42	RB-85	GND-51		
HT70	Z	C1Q-S28	RB-66	GND-28	49-892-0	49-883
HT70	Z	C1Q-S45	RB-66	GND-28	49-892-0	49-883
HT70	Z	C1Q-S63	RB-84	GND-50		
HT75	Z	C1Q-S28	RB-66	GND-28	49-892-0	49-883
HT75	Z	C1Q-S45	RB-66	GND-28	49-892-0	49-883
HT75	Z	C1Q-S45	RB-66	GND-28	49-892-0	49-883
HT75	Z	C1Q-S56	RB-85	GND-51		
HT75	Z	C1Q-S63	RB-84	GND-50		
L 22 D	W	WYK-38-1	K21-WYK	D21-WYK		
L 22 D	W	WYJ-299-1	K20-WYJ	D20-WYJ	49-882	
L 22 D	W	WT-496-1	K20-WAT	D10-WAT	49-831	49-812
L 24 D	W	WT-321-1	K10-WAT	D10-WAT	49-816	49-812
L 26 D	W	WYJ-23-1	K20-WYJ	D20-WYJ	49-882	
L 26 D	W	WYJ-48-1	K20-WYJ	D20-WYJ	49-882	
L 26 D	W	WYK-24-1	K21-WYK	D21-WYK		
L 26 D	W	WYK-40-1	K21-WYK	D21-WYK		
L 26 D	W	WT-474-1	K20-WAT	D10-WAT	49-831	49-812
L 35 DH	W	WYK-69-1	K21-WYK	D21-WYK		
LS 65	W	WT-41-1	K10-WAT	D10-WAT	49-816	49-812
M 23 D	W	WYB-3-1	K10-WYB	D10-WYB		
M 23 D	W	WYK-78-1	K21-WYK	D21-WYK		
M 26 D	W	WYK-82-1	XXX	XXX		
M 35 D	W	WT-462-1	K20-WAT	D10-WAT	49-831	49-812
M 57 D	W	WYK-124-1	K21-WYK	D21-WYK		
M23D	W	WYK-220-1	K21-WYK	D21-WYK		
M23D	W	WYB-13-1	K10-WYB	D10-WYB		
MS 270	W	HD-27-1	K10-HD	D10-HD	49-849	49-847
MS191T	Z	C1Q-S59	RB-91	GND-39		
MS200	Z	C1Q-S96	RB-69	GND-39	49-904	
MS210	Z	C1Q-S87	RB-105	GND-35		
MS210	Z	C1Q-S89	RB-105	GND-35		
MS210	Z	C1Q-S90	RB-105	GND-35		
MS210	Z	C1Q-S102	RB-105	GND-35		

OEM ENGINE/UNIT		WALBRO CARBURETOR			OREGON	
Model	Carb	№	Kit	Gaskets	Kit	Gaskets
Stihl						
MS210	Z	C1Q-S106	RB-105	GND-35		
MS210	Z	C1Q-S86	RB-105	GND-35		
MS210 SAW US.	Z	C1Q-S77	RB-105	GND-35		
MS230	Z	C1Q-S92	RB-105	GND-35		
MS230 EU	Z	C1Q-S84	RB-105	GND-35		
MS230 EU	Z	C1Q-S85	RB-105	GND-35		
MS230 EU	Z	C1Q-S91	RB-105	GND-35		
MS250	Z	C1Q-S92	RB-105	GND-35		
MS250	Z	C1Q-S107	RB-105	GND-35		
MS250 W/Primer	Z	C1Q-S75	RB-105	GND-35		
MS250 EU	Z	C1Q-S84	RB-105	GND-35		
MS250 EU	Z	C1Q-S85	RB-105	GND-35		
MS250 EU	Z	C1Q-S91	RB-105	GND-35		
MS250 No/Primer	Z	C1Q-S76	RB-105	GND-35		
MS360	Z	C3A-S31	RB-31	GND-21	49-899	49-893
MS360	Z	C3A-S39	RB-31	GND-21	49-899	49-893
MS360	Z	C3A-S65	RB-31	GND-21	49-899	49-893
036	Z	C3A-S31	RB-31	GND-21	49-899	49-893
SH55	Z	C1Q-S50	RB-79	GND-39		
SH55	Z	C1Q-S55	RB-89	GND-50	49-288	
SH55	Z	C1Q-S64	RB-89	GND-50	49-288	
SH85	Z	C1Q-S50	RB-79	GND-39		
SH85	Z	C1Q-S55	RB-89	GND-50	49-288	
SH85	Z	C1Q-S64	RB-89	GND-50	49-288	
SR 360	W	HD-2-1	K10-HD	D10-HD	49-849	49-847
TF350AVE	T	HL-327C		DG-5HL		49-801
TS-08	T	HL-292C		DG-5HL		49-801
TS-350	T	HL-292E		DG-5HL		49-801
TS350S	Z	LA-S6	RB-42	GND-30	49-879	
TS360AVS	Z	LA-S7	RB-42	GND-30	49-879	
Tanaka						
AS 25 MS	W	WYJ-288-1	K20-WYJ	D20-WYJ	49-882	
AS 4501	W	WYL-69-1	K20-WYL	D11-WYL		
ASC 6000	W	WYK-1-1	K20-WYK	D20-WYK		
ASM 220	W	WZ-36-1	K10-WZ	D10-WZ	49-877	49-848
ASM 220 A	W	WZ-37-1	K10-WZ	D10-WZ	49-877	49-848
AST 225	W	WZ-46-1	K10-WZ	D10-WZ	49-877	49-848
AST 250	W	WZ-47-1	K10-WZ	D10-WZ	49-877	49-848
AST 4500	W	WYL-21-1	K20-WYL	D11-WYL		
AST 5000	W	WZ-40-1	K10-WZ	D10-WZ	49-877	49-848
AST 7000	W	WZ-34-1	K10-WZ	D10-WZ	49-877	49-848
BE 101	W	WPF-4-1	K10-WPF			
BE 48	W	HDA-131-1	K20-HDA	D10-HDA	49-845	
CB 2010 B	W	WYL-17-1	K20-WYL	D11-WYL		
ECS 290	W	WT-50-1	K10-WAT	D10-WAT	49-816	49-812
ECS 290	W	WT-65-1	K10-WAT	D10-WAT	49-816	49-812
ECS 320	W	WT-145-1	K10-WAT	D10-WAT	49-816	49-812
ECS 320	W	WT-146-1	K10-WAT	D10-WAT	49-816	49-812
ECS 330	W	WT-145-1	K10-WAT	D10-WAT	49-816	49-812
ECS 330	W	WT-146-1	K10-WAT	D10-WAT	49-816	49-812
ECS 3300	W	WT-613-1	K10-WAT	D10-WAT	49-816	49-812
ECS 3300	W	WT-516-1	K20-WAT	D10-WAT	49-831	49-812
ECS 3300	W	WT-517-1	K20-WAT	D10-WAT	49-831	49-812
ECS 3300 B	W	WT-407-1	K10-WAT	D10-WAT	49-816	49-812
ECS 3301	W	WT-478-1	K20-WAT	D10-WAT	49-831	49-812
ECS 3301	W	WT-527-1	K20-WAT	D20-WAT	49-831	49-844
ECS 350	W	WA-65-1	K10-WAT	D10-WAT	49-816	49-812
ECS 350	W	WA-166-1	K10-WAT	D10-WAT	49-816	49-812
ECS 3500	W	WT-139-1	K10-WAT	D10-WAT	49-816	49-812
ECS 3500	W	WT-144-1	K10-WAT	D10-WAT	49-816	49-812
ECS 3500	W	WA-151-1	K10-WAT	D10-WAT	49-816	49-812
ECS 351	W	WA-166-1	K10-WAT	D10-WAT	49-816	49-812
ECS 351	W	WA-65-1	K10-WAT	D10-WAT	49-816	49-812
ECS 355	W	WA-166-1	K10-WAT	D10-WAT	49-816	49-812
ECS 355	W	WA-65-1	K10-WAT	D10-WAT	49-816	49-812
ECS 356	W	WA-166-1	K10-WAT	D10-WAT	49-816	49-812
ECS 356	W	WA-65-1	K10-WAT	D10-WAT	49-816	49-812
ECS 370	W	WA-126-1	K10-WAT	D10-WAT	49-816	49-812
ECS 4000	W	WT-176-1	K10-WAT	D10-WAT	49-816	49-812

CARB = Original OEM Carburetor

B = Bing
N = Nikki
T = Tillotson
TK = Teiki
W = Walbro
Z = Zama

*** No model information available

Carburetor Kit Application Chart

OEM ENGINE/UNIT		WALBRO CARBURETOR			OREGON	
Model	Carb	№	Kit	Gaskets	Kit	Gaskets
Tanaka						
ECS 4000	W	WT-243-1	K10-WAT	D10-WAT	49-816	49-812
ECS 405	W	WA-126-1	K10-WAT	D10-WAT	49-816	49-812
ECS 415	W	WA-154-1	K10-WAT	D10-WAT	49-816	49-812
ECS 415	W	WA-155-1	K10-WAT	D10-WAT	49-816	49-812
ECS 506	W	HDA-13-1	K20-HDA	D10-HDA	49-845	
ECS 506	W	HDA-15-1	K20-HDA	D10-HDA	49-845	
ECS 506	W	HDA-54-1	K22-HDA	D22-HDA	49-853	49-852
ECS 650	W	HDA-13-1	K20-HDA	D10-HDA	49-845	
ECS 650	W	HDA-54-1	K22-HDA	D22-HDA	49-853	49-852
ECV 4501	W	WT-497-1	K20-WAT	D20-WAT	49-831	49-844
ECV 4501	W	WT-484-1	K20-WAT	D10-WAT	49-831	49-812
EHC 120	W	HDA-13-1	K20-HDA	D10-HDA	49-845	
GR 24	W	WYJ-59-1	K20-WYJ	D20-WYJ	49-882	
GR 26	W	WYJ-60-1	K20-WYJ	D20-WYJ	49-882	
HD 200	W	WY-68-1	K10-WY	D10-WY	49-875	49-839
K 2550	W	WYJ-64-1	K20-WYJ	D20-WYJ	49-882	
MC 38	W	WT-265-1	K10-WAT	D10-WAT	49-816	49-812
PB 30	W	WY-15-1	K10-WY	D10-WY	49-875	49-839
PB 312	W	WT-217-1	K10-WAT	D10-WAT	49-816	49-812
PF 270	W	WYJ-260-1	K20-WYJ	D20-WYJ	49-882	
PF 270	W	WYJ-268-1	K20-WYJ	D20-WYJ	49-882	
PF 270	W	WYJ-243-1	K20-WYJ	D20-WYJ	49-882	
PF 4210	W	WYJ-273-1	K20-WYJ	D20-WYJ	49-882	
PH 250	W	WYL-139-1	K20-WYL	D11-WYL		
PH-250	W	WYL-140-1	K20-WYL	D11-WYL		
PMS 335 A	W	WT-404-1	K10-WAT	D10-WAT	49-816	49-812
QUM 268	W	WPF-6-1	K10-WPF			
SP 351	W	WA-150-1	K10-WAT	D10-WAT	49-816	49-812
SP 380	W	WA-150-1	K10-WAT	D10-WAT	49-816	49-812
SP 380	W	WT-250-1	K10-WAT	D10-WAT	49-816	49-812
SP 380	W	WT-265-1	K10-WAT	D10-WAT	49-816	49-812
SP 410	W	WT-250-1	K10-WAT	D10-WAT	49-816	49-812
SP 411	W	WA-151-1	K10-WAT	D10-WAT	49-816	49-812
SP 471 D	W	WA-206-1	K10-WAT	D10-WAT	49-816	49-812
SP 480	W	WT-251-1	K10-WAT	D10-WAT	49-816	49-812
ST 1600	W	WA-182-1	K10-WAT	D10-WAT	49-816	49-812
ST 2048	W	WYL-15-1	K20-WYL	D11-WYL		
ST 2050	W	WYL-15-1	K20-WYL	D11-WYL		
ST 2050H	W	WYL-77-1	K20-WYL	D11-WYL		
SUM 368	W	WPF-2-1	K10-WPF			
SV 3300	W	WT-550-1	K10-WAT	D10-WAT	49-816	49-812
SV 34	W	WT-399-1	K20-WAT	D10-WAT	49-831	49-812
SV 38	W	WT-399-1	K20-WAT	D10-WAT	49-831	49-812
SV 3810	W	WT-593-1	K20-WAT	K10-WAT	49-831	
SV 4310 D	W	WT-593-1	K20-WAT	K10-WAT	49-831	
SW 162	W	WY-48-1	K10-WY	D10-WY	49-875	49-839
SW 163	W	WY-65-1	K10-WY	D10-WY	49-875	49-839
SW 163 H	W	WY-71-1	K10-WY	D10-WY	49-875	49-839
SW 163 H	W	WY-65-1	K10-WY	D10-WY	49-875	49-839
SW 21	W	WYK-7-1	K20-WYK	D20-WYK		
SW 2200	W	WYK-87-1	K21-WYK	D13-WYK		
SW 2200	W	WYK-77-1	K21-WYK	D21-WYK		
SW 24	W	WYK-49-1	K21-WYK	D21-WYK		
SW 2400	W	WYK-88-1	K21-WYK	D13-WYK		
SW 2400	W	WYK-77-1	K21-WYK	D21-WYK		
SW 2700	W	WYK-90-1	K21-WYK	D13-WYK		
SW 2800	W	WYK-131-1	K21-WYK	D21-WYK		
SW 3000	W	WYK-90-1	K21-WYK	D13-WYK		
SW 3200	W	WYK-135-1	K21-WYK	D21-WYK		
T 202	W	WA-110-1	K10-WAT	D10-WAT	49-816	49-812
T 232 M	W	WA-153-1	K10-WAT	D10-WAT	49-816	49-812
T 322	W	WA-127-1	K10-WAT	D10-WAT	49-816	49-812
TAC 2300	W	WT-216-1	K10-WAT	D10-WAT	49-816	49-812
TBC 160	W	WY-5-1	K10-WY	D10-WY	49-875	49-839
TBC 160	W	WA-110-1	K10-WAT	D10-WAT	49-816	49-812
TBC 162	W	WA-110-1	K10-WAT	D10-WAT	49-816	49-812
TBC 2000	W	WYJ-12-1	K20-WYJ	D20-WYJ	49-882	
TBC 202	W	WY-6-1	K10-WY	D10-WY	49-875	49-839
TBC 215	W	WA-134-1	K10-WAT	D10-WAT	49-816	49-812
TBC 220	W	WY-45-1	K10-WY	D10-WY	49-875	49-839
TBC 220	W	WY-53-1	K10-WY	D10-WY	49-875	49-839

CARB = Original OEM Carburetor

B = Bing
N = Nikki
T = Tillotson
TK = Teiki
W = Walbro
Z = Zama

*** No model information available

OEM ENGINE/UNIT		WALBRO CARBURETOR			OREGON	
Model	Carb	№	Kit	Gaskets	Kit	Gaskets
Tanaka						
TBC 220	W	WYJ-88-1	K20-WYJ	D20-WYJ	49-882	
TBC 220	W	WYJ-8-1	K20-WYJ	D20-WYJ	49-882	
TBC 220	W	WZ-34-1	K10-WZ	D10-WZ	49-877	49-848
TBC 221	W	WYJ-55-1	K20-WYJ	D20-WYJ	49-882	
TBC 221	W	WYJ-56-1	K20-WYJ	D20-WYJ	49-882	
TBC 232	W	WA-12-1	K10-WAT	D10-WAT	49-816	49-812
TBC 240	W	WY-47-1	K10-WY	D10-WY	49-875	49-839
TBC 240	W	WYJ-10-1	K20-WYJ	D20-WYJ	49-882	
TBC 241	W	WPF-3-1	K10-WPF			
TBC 250	W	WYJ-33-1	K20-WYJ	D20-WYJ	49-882	
TBC 250	W	WYJ-86-1	K20-WYJ	D20-WYJ	49-882	
TBC 262	W	WA-164-1	K10-WAT	D10-WAT	49-816	49-812
TBC 265	W	WY-49-1	K10-WY	D10-WY	49-875	49-839
TBC 265	W	WYJ-5-1	K20-WYJ	D20-WYJ	49-882	
TBC 265	W	WYJ-34-1	K20-WYJ	D20-WYJ	49-882	
TBC 300	W	WYJ-45-1	K20-WYJ	D20-WYJ	49-882	
TBC 322	W	WA-127-1	K10-WAT	D10-WAT	49-816	49-812
TBC 355	W	WT-142-1	K10-WAT	D10-WAT	49-816	49-812
TBC 4000	W	WYL-9-1	K20-WYJ	D11-WYJ	49-882	
TBC 4110	W	WYJ-133-1	K20-WYJ	D20-WYJ	49-882	
TBC 422 C	W	HDA-114-1	K20-HDA	D10-HDA	49-845	
TBC 440	W	WYJ-133-1	K20-WYJ	D20-WYJ	49-882	
TBC 440	W	WYJ-97-1	K20-WYJ	D20-WYJ	49-882	
TBC 4500	W	WYL-9-1	K20-WYL	D11-WYL		
TBC 4501	W	WYL-17-1	K20-WYL	D11-WYL		
TBC 500	W	HDA-97-1	K12-HDA	D11-HDA		
TBC 5000	W	WY-56-1	K10-WY	D10-WY	49-875	49-839
TBC 5000	W	WYJ-11-1	K20-WYJ	D20-WYJ	49-882	
TBC 5000	W	WYJ-20-1	K20-WYJ	D20-WYJ	49-882	
TBE 265	W	WYJ-3-1	K20-WYJ	D20-WYJ	49-882	
TBL 4600	W	WYJ-107-1	K20-WYJ	D20-WYJ	49-882	
TBL 4600	W	WYJ-132-1	K20-WYJ	D20-WYJ	49-882	
TBL 500	W	HDA-51-1	K12-HDA	D11-HDA		
TC 101	W	WPF-7-1	K10-WPF			
TC 202	W	WY-5-1	K10-WY	D10-WY	49-875	49-839
TC 212	W	WY-6-1	K10-WY	D10-WY	49-875	49-839
TC 212 AJ	W	WY-42-1	K10-WY	D10-WY	49-875	49-839
TC 212 AJ	W	WY-68-1	K10-WY	D10-WY	49-875	49-839
TC 215	W	WA-195-1	K10-WAT	D10-WAT	49-816	49-812
TC 215	W	WA-134-1	K10-WAT	D10-WAT	49-816	49-812
TC 219	W	WY-8-1	K10-WY	D10-WY	49-875	49-839
TC 219	W	WY-9-1	K10-WY	D10-WY	49-875	49-839
TC 220	W	WYJ-156-1	K20-WYJ	D20-WYJ	49-882	
TC 2200	W	WYL-52-1	K20-WYL	D11-WYL		
TC 2200	W	WYL-120-1	K20-WYL	D11-WYL		
TC 2200	W	WYL-101-1	K20-WYL	D11-WYL		
TC 2200	W	WYL-112-1	K20-WYL	D11-WYL		
TC 2200	W	WYL-81-1	K20-WYL	D11-WYL		
TC 2211	W	WYL-87-1	K20-WYL	D11-WYL		
TC 2211	W	WYL-93-1	K20-WYL	D11-WYL		
TC 2211	W	WYL-95-1	K20-WYL	D11-WYL		
TC 2211	W	WYL-45-1	K20-WYL	D11-WYL		
TC 2211	W	WYL-121-1	K20-WYL	D11-WYL		
TC 2390	W	WYL-112-1	K20-WYL	D11-WYL		
TC 2390	W	WYL-120-1	K20-WYL	D11-WYL		
TC 2390	W	WYL-52-1	K20-WYL	D11-WYL		
TC 2400	W	WYL-164-1	K20-WYL	D11-WYL		
TC 2400	W	WYL-138-1	K20-WYL	D11-WYL		
TC 2400	W	WYL-85-1	K20-WYL	D11-WYL		
TC 2400	W	WYL-45-1	K20-WYL	D11-WYL		
TC 241	W	WPF-7-1	K10-WPF			
TC 250	W	WYJ-64-1	K20-WYJ	D20-WYJ	49-882	
TC 250	W	WYJ-148-1	K20-WYJ	D20-WYJ	49-882	
TC 250	W	WYJ-213-1	K20-WYJ	D20-WYJ	49-882	
TC 250	W	WYJ-189-1	K20-WYJ	D20-WYJ	49-882	
TC 250	W	WYJ-189-1	K20-WYJ	D20-WYJ	49-882	
TC 250 B	W	WYJ-262-1	K10-WYJ	D20-WYJ		
TC 250 B	W	WYJ-225-1	K20-WYJ	D20-WYJ	49-882	
TC 2501	W	WYL-149-1	K20-WYL	D11-WYL		
TC 2501	W	WYJ-296-1	K20-WYJ	D20-WYJ	49-882	
TC 262	W	WYJ-203-1	K20-WYJ	D20-WYJ	49-882	
TC 262	W	WYJ-197-1	K20-WYJ	D20-WYJ	49-882	
TC 300	W	WYJ-102-1	K20-WYJ	D20-WYJ	49-882	
TC 300	W	WYJ-216-1	K20-WYJ	D20-WYJ	49-882	
TC 300	W	WYJ-230-1	K20-WYJ	D20-WYJ	49-882	
TC 312	W	WYJ-112-1	K20-WYJ	D20-WYJ	49-882	
TC 312	W	WYJ-159-1	K20-WYJ	D20-WYJ	49-882	
TC 312	W	WYJ-206-1	K20-WYJ	D20-WYJ	49-882	
TC 312 K	W	WT-198-1	K10-WAT	D10-WAT	49-816	49-812
TC 3200	W	WYJ-292-1	K20-WYJ	D20-WYJ	49-882	

C

Carburetor Kit Application Chart

OEM ENGINE/UNIT		WALBRO CARBURETOR			OREGON	
Model	Carb	№	Kit	Gaskets	Kit	Gaskets
Tanaka						
TC 355	W	WT-142-1	K10-WAT	D10-WAT	49-816	49-812
TC 355	W	WYJ-112-1	K20-WYJ	D20-WYJ	49-882	
TC 40	W	HDA-44-1	K12-HDA	D11-HDA		
TC 4000	W	WYL-65-1	K20-WYL	D11-WYL		
TC 4200	W	WYJ-168-1	K20-WYJ	D20-WYJ	49-882	
TC 4200	W	WYK-85-1	K21-WYK	D13-WYK		
TC 4210	W	WYJ-224-1	K20-WYJ	D20-WYJ	49-882	
TC 432	W	WYJ-164-1	K20-WYJ	D20-WYJ	49-882	
TC 432	W	WYJ-107-1	K20-WYJ	D20-WYJ	49-882	
TC 432	W	WYJ-307-1	K20-WYJ	D20-WYJ	49-882	
TC 4500	W	WYL-94-1	K20-WYL	D11-WYL		
TC 4501 N	W	WYL-49-1	K20-WYL	D11-WYL		
TC 4501 N	W	WYL-66-1	K20-WYL	D11-WYL		
TC 455	W	HDA-51-1	K12-HDA	D11-HDA		
TC 47	W	HDA-180-1	K22-HDA	D22-HDA	49-853	49-852
TC 47 FN	W	HDA-133-1	K20-HDA	D10-HDA	49-845	
TC-2211	W	WYL-121-1	K20-WYL	D11-WYL		
TCA 250	W	WYJ-126-1	K20-WYJ	D20-WYJ	49-882	
TCA 500	W	HDA-184-1	K20-HDA	D20-HDA	49-845	49-835
TCP 210	W	WYL-16-1	K20-WYL	D11-WYL		
TCP 25	W	WYL-20-1	K20-WYL	D11-WYL		
TCS 3401	W	WT-551-1	K10-WAT	D10-WAT	49-816	49-812
TCS 3401	W	WT-553-1	K20-WAT	D20-WAT	49-831	49-844
TCS-2800	W	WT-797-1	K10-WAT	D10-WAT	49-816	49-812
TCS-2800	W	WT-799-1	K10-WAT	D10-WAT	49-816	49-812
TEA 500	W	HDA-43-1	K20-HDA	D10-HDA	49-845	
TED 210	W	WYL-14-1	K20-WYL	D11-WYL		
TED 210	W	WYL-30-1	K20-WYL	D11-WYL		
TED 210	W	WYL-71-1	K20-WYL	D11-WYL		
TED 23	W	WA-12-1	K10-WAT	D10-WAT	49-816	49-812
TED 232	W	WA-12-1	K10-WAT	D10-WAT	49-816	49-812
TED 260	W	WA-183-1	K10-WAT	D10-WAT	49-816	49-812
TED 265	W	WA-183-1	K10-WAT	D10-WAT	49-816	49-812
TF 250	W	WB-29-1	K10-WB	D10-WB	49-872	49-869
THB 2500	W	WYJ-166-1	K20-WYJ	D20-WYJ	49-882	
THB 300	W	WY-15-1	K10-WY	D10-WY	49-875	49-839
THT 16	W	WA-110-1	K10-WAT	D10-WAT	49-816	49-812
THT 162	W	WA-110-1	K10-WAT	D10-WAT	49-816	49-812
THT 200	W	WY-9-1	K10-WY	D10-WY	49-875	49-839
THT 210	W	WYL-14-1	K20-WYL	D11-WYL		
THT 210	W	WYL-71-1	K20-WYL	D11-WYL		
THT 210 A	W	WYL-46-1	K20-WYL	D11-WYL		
THT 212	W	WY-8-1	K10-WY	D10-WY	49-875	49-839
THT 230	W	WY-8-1	K10-WY	D10-WY	49-875	49-839
THT 232	W	WA-12-1	K10-WAT	D10-WAT	49-816	49-812
THT 262	W	WA-164-1	K10-WAT	D10-WAT	49-816	49-812
TIA 30	W	WA-118-1	K10-WAT	D10-WAT	49-816	49-812
TIA 302	W	WA-118-1	K10-WAT	D10-WAT	49-816	49-812
TIA 305	W	WA-118-1	K10-WAT	D10-WAT	49-816	49-812
TLE 550	W	HDA-178-1	K22-HDA	D22-HDA	49-853	49-852
TLE 550	W	HDA-58-1	K20-HDA	D10-HDA	49-845	
TM 24 PSE	W	WYK-6-1	K20-WYK	D20-WYK		
TM 250	W	WYJ-210-1	K20-WYJ	D20-WYJ	49-882	
TS 2048	W	WYL-15-1	K20-WYL	D11-WYL		
TS 2050	W	WYL-15-1	K20-WYL	D11-WYL		
TST 218	W	WY-54-1	K10-WY	D10-WY	49-875	49-839
TST 218	W	WYJ-6-1	K20-WYJ	D20-WYJ	49-882	
TX 20	W	WA-208-1	K10-WAT	D10-WAT	49-816	49-812
TY 250	W	WB-39-1	K10-WB	D10-WB	49-872	49-869
TY 250	W	WB-36-1	K10-WB	D10-WB	49-872	49-869
Technic Tool						
Power Pruner	Z	C1U-M16	RB-28	GND-18	49-866	
Tecumseh						
***	W	LME-34-1	K1-LMEG	G-LM		
***	W	LME-36-1	K2-LMEG	G-LM		
***	W	LME-37-1	K2-LMEG	G-LM		
***	W	LME-42-1	K2-LMEG	G-LM		
OH 120	W	WHG-28-1	K1-WHG			
OH 120	W	WHG-27-1	K1-WHG			
OH 140	W	WHG-25-1	K1-WHG			
OH 140	W	WHG-26-1	K1-WHG			
OH 160	W	WHG-16-1	K1-WHG			
OH 160	W	WHG-17-1	K1-WHG			
OH 180	W	WHG-16-1	K1-WHG			

OEM ENGINE/UNIT		WALBRO CARBURETOR			OREGON	
Model	Carb	№	Kit	Gaskets	Kit	Gaskets
Tecumseh						
OH 180	W	WHG-17-1	K1-WHG			
TC 200	W	WTA-15-1				
TC 200	W	WTA-3-1				
TC 300	W	WTA-14-1				
TEC 1525	W	LMK-26-1	K10-LMK			
Tohatsu						
MP 472	W	WB-37-1	K10-WB	D10-WB	49-872	49-869
470	W	WB-31-1	K10-WB	D10-WB	49-872	49-869
Topso						
E 500 AV	W	WS-24-1	K10-WS	D10-WS		49-814
E 501 AV	W	WJ-11-1	K11-WJ	D11-WJ		
E 511 AV	W	WJ-11-1	K11-WJ	D11-WJ		
E 600 AV	W	WS-24-1	K10-WS	D10-WS		49-814
E 601 AV	W	WJ-11-1	K11-WJ	D11-WJ		
E 611 AVB	W	WJ-11-1	K11-WJ	D11-WJ		
E 700 AV	W	WJ-11-1	K11-WJ	D11-WJ		
E 710 AVB	W	WJ-11-1	K11-WJ	D11-WJ		
Toro						
Trimmers	Z	C1U-M16	RB-28	GND-18	49-866	
S1620	Z	C1U-P6	RB-29	GND-18	49-285	
F-SERIES	W	WYC-7-1	K10-WYC	D10-WYC		
Trim-Rite						
TC 14	W	WA-120-1	K10-WAT	D10-WAT	49-816	49-812
TC 21 T	W	WA-120-1	K10-WAT	D10-WAT	49-816	49-812
TC 21 TA	W	WT-14-1	K20-WAT	D10-WAT	49-831	49-812
TR-2217C	Z	C1U-M16	RB-28	GND-18	49-866	
Turfpower						
280TP	Z	C1U-P6	RB-29	GND-18	49-285	
310BVTP	Z	C1U-P6	RB-29	GND-18	49-285	
780TP	Z	C1U-P7	RB-29	GND-18	49-285	
LIMITCAPMODELS	Z	C1U-P10	RB-29	GND-18	49-285	
LIMITCAPMODELS	Z	C1U-P11	RB-29	GND-18	49-285	
Wisconsin						
AENL	W	WHL-19-1	K1-WHL			
S 14D	W	WHG-31-1	K1-WHG			
W2 1235	W	WHG-18-1	K1-WHG			
W2 1235 [V2]	W	WHG-96-1	K1-WHG			
W2 1250	W	WHG-18-1	K1-WHG			
W2 1250 [V2]	W	WHG-96-1	K1-WHG			
W2 880	W	WHG-53-1	K1-WHG			
Yanmar						
BRUSH CUTTER	Z	C1Q-SK8	RB-68	GND-17		49-880
B.C/S.T.	Z	C1Q-SK10	RB-68	GND-17		49-880
Yamaha						
OP78	W	WT209-1	K20-WAT	D10-WAT	49-831	49-812
OP78	W	WT-47-1	K10-WAT	D10-WAT	49-816	49-812

CARB = Original OEM Carburetor

B = Bing
N = Nikki
T = Tillotson
TK = Teiki
W = Walbro
Z = Zama

*** No model information available

C

Max Torque Clutches

"SS" Type Automatic Clutch for 4-Cycle Engines.
Six sintered-metal shoes engage at 2000 RPM. Stainless steel garter spring, works clockwise or counterclockwise, oilite bearings for long life. Works in oil, dirt and water with proper maintenance. 3/16" Keyway and Allen set screws included.

OREGON	Teeth	Chain Size	Bore	Product Code
84-004	12	#35	3/4"	
84-002	11	#35	5/8"	
84-011	12	#35	5/8"	
84-001	10	#41	3/4"	
84-007	10	#41	5/8"	

Pulley Clutches - 3/4" Shaft

Diameter: 4-1/2"

OREGON	Pulley Dia.	**Belt** Size	Bore	Product Code
84-009	3.2"	A & B	5/8"	
84-006	3.2"	1/2"	3/4"	

Brister Clutches - 3/4" Shaft

Special lube system keeps clutch lubricated, includes grease zerk.

OREGON	Teeth	Chain Size	Bore	Product Code
84-013	10	#41	3/4"	
84-012	12	#35	3/4"	

Max Torque Clutches

OREGON	Teeth	Chain Size	Bore	Product Code
84-008	10	#41	3/4"	
84-005	12	#35	3/4"	
45-634	**Bearing Only** – OD: 1", for clutches with 3/4" bore. Use with Oregon® 84-004, 84-001, 84-013, & 84-012			

Torque Converter – Replacement Parts

OREGON	OEM Number	Product Code

Belts

84-027	**Comet # 203589A** Replacement belt for Oregon 84-026 torque converter. 3/4" x 27-3/8"	
84-028	**Max Torque # TCBLT** Torque converter belt for Max Torque torque converters. 3/4" x 29-9/32"	
84-029	**Max Torque # TCBLTL** Torque converter belt for Max Torque torque converters, long version. 3/4" x 29-21/32"	

Drive Pulley's

84-030	**Max Torque # TCDNS34** Drive pulley for Max Torque torque converter. Symetrical, bore: 3/4"	
84-031	**Max Torque # TCDRS34** Torque converter driver pulley for Max Torque torque converters, symmetrical, 3/4" bore.	

84-028

84-030

84-029

84-031

C

Chain Roller Parts

Single Strand Roller Chain – 10 Ft. Lengths

OREGON	Size	Dimensions	Product Code
32-100	#25	1/4 x 1/8	
32-101	#35	3/8 x 3/16	
32-105	#40	1/2 x 5/16	
32-107	#41	1/2 x 1/4	
32-111	#42/45	1/2 x 3/16	
32-112	#43/65	1/2 x 1/8	
32-114	#50	5/8 x 3/8	
32-116*	#60	3/4 x 1/2	
32-110	#420	1/2 x 1/4	

*For agricultural machinery

Connecting Links

OREGON	Size	Product Code
02-187	#25	
02-188	#35	
02-190	#40	
02-191	#41	
02-192	#42	
02-194	#43	
02-195	#50	
02-196*	#60	
02-193	#420	

*For agricultural machinery

Single Strand Roller Chain – 100 Ft. Lengths

OREGON	Size	Dimensions	Product Code
32-103	#35	3/8 x 3/16	
32-106	#40	1/2 x 5/16	
32-108	#41	1/2 x 1/4	

Offset Links

OREGON	Size	Product Code
02-175	#25	
02-176	#35	
02-177	#40	
02-178	#41	
02-179	#42	
02-180	#43	
02-182	#50	
02-184*	#60	
02-181	#420	

*For agricultural machinery

Chain Repair

OREGON	Dimensions	Product Code
42-430-0	Chain Detacher Complete Tool	
42-432-0	Chain Detacher Complete Tool Hardened tip, uses #60 through #100 chain	
42-434-0	Chain Holder For #35 through #60 chain	

42-430-0

42-432-0

42-434-0

C

Screnches

	Driver Type:	⊖	⊖	⊖	⊖	⊖	⊖	✱	⊖	⊖	⊖	⊖
Dimensions (mm)	S1 x S2	13 x 19	13 x 19	13 x 19	19 x 10	16 x 13	19 x 17	19	19 x 14	21 x 17	15 x 19	16 x 11
	A1	25	21	33	35	35	27	12	35	30	28	40
	L2	175	177	171	172	172	177	177	175	172	177	177
	L1	52	44	68	70	72	57	51	70	60	56	80
Oregon® №:		**57-005**	**57-017**	**57-016**	**57-003**	**57-002**	**57-008**	**57-019**	**57-006**	**57-010**	**57-014**	**57-001**
Dolmar			✓				✓					
Echo			✓	✓	✓				✓			
Homelite												✓
Husqvarna		✓	✓	✓		✓						
John Deere				✓	✓	✓			✓			
Jonsered		✓	✓			✓					✓	
McCulloch		✓										✓
Efco / Oleo-Mac				✓	✓		✓					
Partner		✓	✓			✓						
Pioneer									✓			
Poulan			✓						✓		✓	
Shindaiwa		✓	✓		✓							
Stihl			✓	✓			✓	✓		✓		

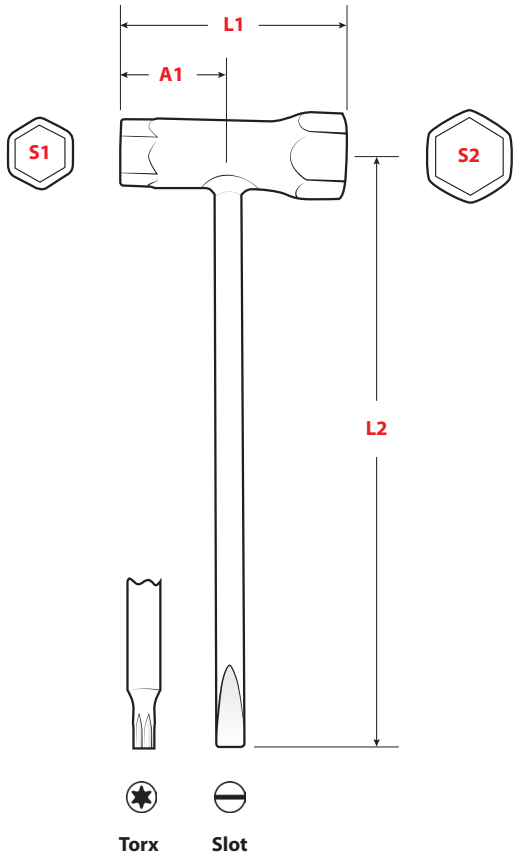

Chainsaw & Cut-Off Saw Parts

OREGON	Replaces	Description	Product Code

Air Filters

30-618	Echo 130310-39730	**Air Filter** - NEW Fits Echo CS3500, CS4200, & CS420 Height: 2-1/4", outer diameter: 2-1/2", inner diameter: 1-3/4"	
30-621	Echo A226-000291 Echo CS350TES	**Air Filter** - NEW	
30-625	Echo 13031038331	**Air Filter** - NEW Fits Echo CS440, CS4400, CS450, CS510, CS520, & CS530 Height: 1-3/8", outer diameter: 2-1/2", inner diameter: 1-3/4"	
30-620	Echo P021-016371	**Air Filter** - NEW Fits Echo CS600	
30-619	Echo A226-000070	**Air Filter** - NEW Fits Echo CS6702 & CS680S	
55-207	Homelite A65178	**Air Filter – Felt** For chainsaws Fits EZ-Automatic Length: 4", width: 2-7/8"	
55-211	Homelite 63589-A	**Air Filter** For chainsaws Fits models SXL, XL12, XL15, XL400, XL500, & UT10618A Length: 4", width: 3-1/2"	
55-610	Homelite 69141 Homelite D92702B Homelite A24779	**Foam Air Filter** Fits models Super 2, XL2, XL, CSB3012, & LX30 Bandit Diameter: 1-7/8", thickness: 1/2" Pre-oiled foam air filter - (Previously 55-228)	
30-124	Husqvarna 503 44 72-03	**Air Filter** Fits 261, 262, 268, 272, & 394 chainsaws	
30-148	Husqvarna 501 80 71-05	**Air Filter** Fits 61, 66, 266, 281, & 288 chainsaws	

C

Air Filters

OREGON	Replaces	Description	Product Code	
30-622	Husqvarna 505126306	**Air Filter** - NEW Fits Husqvarna 555, 560XP, CS2258, & CS2260 Length: 3", width: 2-1/2", height: 1-3/8"		
30-623	Husqvarna 522675003	**Air Filter** - NEW Fits Husqvarna 562XP Length: 3-1/8", width: 2-9/16", height: 2-1/2"		
30-634	Husqvarna 544 08 08-02	**Air Filter** - NEW Fits Husqvarna 445, 445E, 450, & 450E chainsaw		
30-631	Husqvarna 544181602	**Air Filter** - NEW Fits Husqvarna K750 Length: 5", width: 4-1/2", height: 1-3/8"		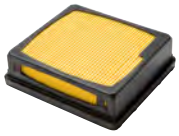
30-627	Husqvarna 544181602	**Air Filter** - NEW Fits Husqvarna K760 Length: 4-7/8", width: 4-1/2", height: 2-1/2"		
30-645	Husqvarna, 503 81 45-01	**Air Filter** - NEW Fits Husqvarna 362, 362EPA, 362 Special, 362XP, 365, 365EPA, 365 Special, 365 Special EPA, 371, 371EPA, 372, 372EPA, & 372XPW chainsaws		
30-641	Husqvarna 530029811	**Air Filter** - NEW Fits Husqvarna 36, 41, 136, 137, 141, & 142 chainsaws Length: 3-1/8", width: 2-11/16", height: 7/8"		
30-630	Husqvarna 575269103	**Air Filter** - NEW Fits Husqvarna 362, 365, 371, & 372 Length: 3-1/2", width: 2-7/8"		
30-637	Husqvarna 501 80 71-05	**Air Filter** - NEW Fits Husqvarna 61, 181, 266, 281, & 288		
30-633	Husqvarna 537024003	**Air Filter** - NEW Fits Husqvarna 340, 345, 346 XP, 350, 351, & 353 chainsaws		

C

Chainsaw & Cut-Off Saw Parts

OREGON	Replaces	Description	Product Code	

Air Filters

30-648	Husqvarna 503 89 82-01	**Air Filter** - NEW Fits Husqvarna 51/55 Length: 4", width: 3-1/2", height: 2"		
55-218	McCulloch 214224 McCulloch 61460 McCulloch 216905	**Air Filter** For chainsaws Fits 110, 120, 130, & Eager Beaver Diameter: 2", thickness: 7/8"		
55-212	McCulloch 69922 McCulloch 92420	**Air Filter** For chainsaws Fits 10-10 Length: 4-3/8", width: 4-1/4"		
55-214	McCulloch 95213 McCulloch 214226	**Air Filter** For chainsaws Fits 600 & Eager Beaver 3.7 Length: 4-3/8", width: 4-1/4"		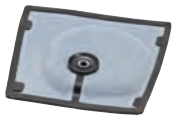
30-836		**Shop Pack** - 5 of 30-066		
30-149	Partner 506-23-18-02	**Air Filter** Fits K950 & K1250 active cut-off saws Length: 6", width: 4-1/4", height: 2-5/8"		
55-226	Poulan 24548	**Air Filter** For chainsaws Fits 3400 & 3700 Length: 3-7/8", width: 2-5/8", height: 1"		
55-515	Poulan 530-37793	**Foam Air Filter** Fits gas chainsaw models 1950, 2050, 2075, 210, 2150, 2175, 2250, 230, 2450, 2550, & 260 Pre-oiled air filter		
55-612	Pouan 23369	**Foam Air Filter** For chainsaws Fits model 25 Length: 3-3/8", width: 1-5/8", height: 1-1/4" Pre-oiled foam - (Previously Oregon® 55-223)		
55-613	Poulan 23791	**Foam Air Filter** For chainsaws Fits model MICRO XXV, 18, 20, & 2300 Length: 2-5/8", width: 1-1/2", height: 1" Pre-oiled foam - (Previously Oregon 55-224)		

C

Air Filters

OREGON	Replaces	Description	Product Code
30-719	Shindaiwa 38010-82581	**Air Filter** Fits EC7500 & EC7600 cut-off saws Includes foam pre-filter Length: 7", width: 4", height: 2"	
30-636	Stihl 1127 120 1621	**Air Filter** - NEW Fits Stihl 029, 039, MS290, & MS310 Length: 4-5/8", width: 1-1/2", height: 2-5/8"	
30-642	Stihl 1123 120 1612	**Air Filter** - NEW Fits Stihl MS210, MS230, & MS250	
30-639	Stihl 1125 120 1626	**Air Filter** - NEW Fits Stihl 034, 036, MS340, & MS360	
30-646	Stihl 1119-120-1610	**Air Filter** - NEW Fits Stihl 038, C44-50, & MS380	
30-632	Stihl 1135 120 1600	**Air Filter** - NEW Fits Stihl MS341 & MS361 Length: 4-5/8", width: 2-13/16", height: 1-11/16"	
30-628	Stihl 4224-141-0300	**Air Filter** - NEW Stihl TS700 & TS800 Length: 5-1/2"	
30-653	Stihl 0000-141-0300	**Pre-Air Filter, Heavy Duty** - NEW Fits Stihl 044, 046, 064, 066, 084, 088, MS440, MS441, MS460, MS640, MS650, MS660, MS780, & MS880	
30-215	Stihl 1118 120 1611	**Air Filter** - NEW Fits Stihl most 028 Length: 3-5/8", width: 2-11/32", height: 13/16"	
30-216	Stihl 1139 120 1601	**Air Filter** - NEW Fits MS 211, MS 211 C, MS 181, & MS 181 C	
30-218	Stihl 1123 120 1612	**Air Filter** - NEW Fits MS 250, MS 250 C, 021, 023, 025, P 835, P 840, MS 210, MS 210 C, MS 230, & MS 230 C	

Chainsaw & Cut-Off Saw Parts

OREGON	Replaces	Description	Product Code

Air Filters

30-220	Stihl 1140 140 4401	**Air Filter** - NEW Fits MS 201 T chainsaws Length: 4-7/16", width: 3", height: 3/4"	
30-223	Stihl 4148 141 0300	**Air Filter, Paper** - NEW Fits FS 240 C, FS 240 RC, FS 260 C, FS 260 RC, FS 360 C, FS 410 C, FS 460 C, FS 460 RC	
30-853	Stihl 0000-120-1654	**Air Filter** Fits models 044, MS440, 066, MS660, 084, & 088 Length: 5", width: 4-1/8", height: 1-3/4" 3-piece kit	
30-154	1110-120-1601	**Air Filter** For model 041	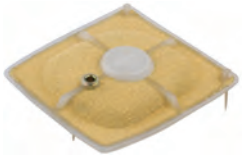
30-155	1120-120-1600	**Air Filter** For models 009, 010, & 011	
55-236	Stihl 1118-120-1611	**Air Filter** Fits 028 chainsaw Length: 3-1/2", width: 2-1/4", height: 3/4"	
30-337	Stihl 1121-120-1617	**Air Filter** Fits models 024, 026, MS240, & MS260	
30-156	1130-124-0800	**Air Filter** For models 017, 018, MS170, & MS180	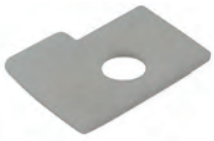
55-240	Stihl 4201-141-0300	**Air Filter** For cut-off saws, main filter Fits Quick Cut models TS350, TS360 & TS510 OD: 3-7/8", ID: 2-3/8", height: 2-7/8" Use with Oregon® 55-241 & 55-242	
55-241	Stihl 4201-141-0310	**Air Filter** Felt wrap with stitched elastic For cut-off saws Fits Quick Cut models TS350, TS360, & TS510 Use with Oregon 55-240 & 55-242	

C

OREGON	Replaces	Description	Product Code

Air Filters

55-242	Stihl 4201-140-1801	**Inner Filter** For cut-off saws Fits Cut Quick models TS350, TS360, & TS510 Use with Oregon 55-240 & 55-241	
55-263		**Air Filter Kit** Fits Quick Cut models TS350, TS360, & TS510 cut-off saws Contains one each of Oregon 55-240, 55-241, & 55-242	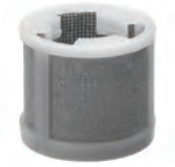
55-246	Stihl 4221-141-0310	**Felt Pre-Cleaner** Fits TS460 cut-off saw Use with Oregon 55-248 air filter & 55-243 inner filter with stitched elastic for tight seal	
55-243	Stihl 4221-140-1800	**Inner Filter** Fits TS460 cut-off saw OD: 2-7/8", ID: 2-11/16", height: 1-11/16" Use with Oregon 55-248 & 55-246	
55-248	Stihl 4221-140-4400	**Air Filter, Main** Fits TS460 cut-off saw OD: 4-1/2", height: 2-1/4" Use with Oregon 55-243 inner filter & 55-246 pre-cleaner	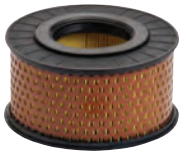
55-262		**Air Filter Kit** Fits Quick Cut model TS460 cut-off saw Contains one each of Oregon 55-243, 55-246, & 55-248	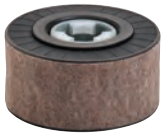
55-244	Stihl 4223-140-1800	**Air Filter** Secondary filter, flocked screen Fits TS400 cut-off saw Length: 4-5/8", width: 2-3/4", height: 3/8"	
30-838		**SHOP PACK** - 5 of 55-244	
55-249	Stihl 4223-141-0300	**Air Filter Panel Style** Fits TS400 cut-off saw, main filter Length: 5-3/8", width: 3-1/2", height: 1-15/16"	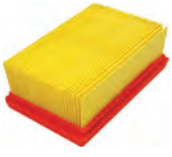
30-839		**SHOP PACK** - 5 of 55-249	
55-245	Stihl 4223-141-0600	**Pre-Filter** Fits TS400 cut-off saw Outer foam filter Length: 4-7/8", width: 3-5/32", height: 3/4"	

C

Chainsaw & Cut-Off Saw Parts

OREGON	Replaces	Description	Product Code

Air Filters

30-153

Air Filter Kit
Fits TS400 cut-off saws
Contains 1 each of Oregon® 55-245, 55-244, & 55-249

30-333 Stihl 4238-140-4401

Air Filter Kit
Fits TS410 & TS420 cut-off saws
Length: 5-7/8", width: 3-7/8" (5-1/2"), height: 1-1/2"

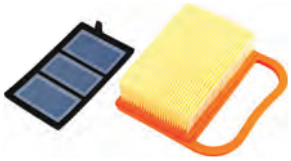

Cut-Off Saw Belts

OREGON	OEM No.	Size	Description	Product Code
75-711	Partner 506 03 30-31	3/8" x 31-1/2"	Cogged v-belt for K650 Active, K650, & K700 Active II cut-off saws	
75-724	Partner 506 07 05-03	3/8" x 34-1/2"	Cogged v-belt for K950 cut-off saws with 12" & 14" blades	
75-713	Partner 506 07 05-06	3/8" x 31-1/2"	Cogged v-belt for K650 Active III & K7000 Active III cut-off saws	
75-712	Partner 506 29 67-02	.550" x 32"	Multi-ribbed belt for K750 cut-off saws	
75-272	Stihl 9490-000-7850	3/8" x 33-3/4"	Drive belt for TS350 cut-off saw	
75-273	Stihl 9490-000-7851	3/8" x 34-7/16"	Drive belt for TS400 cut-off saw	

Electrical

55-111 Stihl 1121-430-0200

Stop Switch
For models 024, 026, 070, TS08, & TS350

33-206 Universal

Toggle Switch
2 terminal ends

33-207 Universal

Toggle Switch
1 terminal end

33-180 Husqvarna 503 717 901

Stop Switch
Fits many Husqvarna models

33-158 Husqvarna 503718201

On/Off Switch
For models 232L, 232R, 235FR, 235R, 324LDX, 324LX, 324RX, 326, 336, 339XPT, & 385

C

Electrical

OREGON	Replaces	Description	Product Code
33-053	Universal	**Ignition Module** Fits most 2-cycle & 4-cycle engines Used to replace points & condenser	
33-254	Husqvarna 544018401 Husqvarna 503901401	**Ignition Coil** Fits chainsaw models 51, 55, & 55 Rancher (2000–2007)	
33-244	Stihl 0000-400-1300	**Ignition Coil** Fits chainsaw models 024, 026, 028, 034, 036, 044, 046, & 048	
33-243	Stihl 0000-400-1306 Stihl 0000-400-1302	**Ignition Coil** Fits chainsaw models 021, 023, & 025, & trimmer models FS 160, FS 180, & FS 220	
33-245	Stihl 1122-400-1314	**Ignition Coil** Fits chainsaw models 046, 066, MS460, MS650, & MS660	
36-425	Echo 159012-03433	**Spark Plug Boot** - NEW Echo CS302, CS4600, PB230, PB250, PB500, SRM230, SRM260, SRM280, SRM310, SRM2000, SRM2500, SRM3000, & SRM4600	
36-424	Echo 159012-01620	**Spark Plug Boot** - NEW Echo CS280, CS300, CS3000, PB200, PB400, PB1000, PB2400, SRM200, SRM340, SRM1500, SRM2100, SRM2400, & SRM3100	
33-208	Homelite A55373-A	**Spark Plug Boot** 5 mm for trimmers and chainsaws Protects plug from moisture Eliminates shock Positive connection	
33-204	Husqvarna 501-485-402	**Spark Plug Boot** 90 degree for chainsaw models 340, 345, 346, 350, & 351 Protects plug from moisture, eliminates shock, positive connection	
36-427	Makita 957-604-240	**Spark Plug Boot** - NEW Fits Makita DPC6200, DPC6201, DPC6400, DPC6401, DPC6410, DPC6411, DPC7001, DPC7300, DPC7301, DPC7310, DPC7311, DPC7321, DPC8112, DPC9500, DPC9501, DCS6401, DCS642120, DCS7301, & DCS7901	

C

Chainsaw & Cut-Off Saw Parts

OREGON	Replaces	Description	Product Code

Electrical

33-210	Universal	**Spark Plug Boot** Fits most spark plugs Protects plug from moisture Eliminates shock Positive connection	

Fasteners

04-008	Husqvarna 5032200-01	**Bar Stud Nut** 8 mm	
04-007	McCulloch 110676	**Bar Stud Nut** 1/4-28 for Mini Mac 600	
04-006-0	McCulloch 120029	**Bar Stud Nut** M6.3 x 1 for Mini Mac 300	
04-009	Stihl 000-955-0801	**Bar Stud Nut** 8 mm x 1.25 Fits 028A, 031AV, 032AV, 034AV, 041AV, 042AV, & 045AV	

Chain Adjusters

56-004	Echo 43301611031 Echo 43301402830 John Deere PT6683	**Chain Adjuster, Includes Pin** Fits models 440, 500, 510, 550, 610, 600, 650, & 750	
56-022	Husqvarna 537-0404-21	**Chain Adjuster Kit** Fits models 362XP, 365, 372, 385, 570, 575, & 576	
02-137	Husqvarna 501452702	**Chain Adjuster** - NEW Fits most 42, 44, 55, 55, Rancher, 133, 234, 238, 242, 340, 345, & 350 chainsaws	
02-138	Husqvarna 501537101	**Chain Adjuster** - NEW Fits most 61, 66, 181, 266, 268, 268 Special, 272 XP, 281, & 288 chainsaws	
02-139	Husqvarna 537 07 12-01	**Chain Adjuster** - NEW Fits Husqvarna 345, 346, 350, 350, 353, 357, & 359	
02-136	Husqvarna 530 01 58-26	**Bar Adjuster Pin** - NEW Fits Husqvarna 141	

C

Chain Adjusters

OREGON	Replaces	Description	Product Code	
56-002	McCulloch 84929 McCulloch 90658 McCulloch 68656	**Chain Adjuster with Bolt** Fits Mini Mac 100 & 300 series		
56-003	McCulloch 102115 McCulloch 91982 McCulloch 110590	**Chain Adjuster with Bolt** Fits 600 series		
56-001	Homelite A00440 Homelite 69254-1A Homelite 110590	**Chain Adjuster with Bolt** Fits XL, XL2, Super 2, 240, & 245		
56-011	Stihl 1118-664-1600 Stihl 1120-664-1500	**Chain Adjuster with Bolt** Fits models 009 & 028		
56-008	Stihl 1110-664-1600 Stihl 1110-664-1500	**Chain Adjuster with Bolt** Fits models 030, 031, 031AV, 031AVS, 032, 041A, 042, 042AV, 045, 045AV, & 045AV super		
56-025	Stihl 1106-664-1501 Stihl 0000-951-2911	**Chain Adjuster Kit** Fits models 050, 051, 070, 075, 076, 08S, & 090		
56-023	Stihl 1125-007-1021	**Chain Adjuster Kit** Fits models MS360, MS380, & MS600		
56-024	Stihl 1123-640-1900 Stihl 1123-664-1400	**Chain Adjuster Kit** Fits models MS230 & MS250		

Grinding Wheels

High-quality, vitrified grinding wheels designed specifically for Oregon® chain and grinders. Resists burning the cutters and leaves a precision finish. Wheels will also fit Efco chain grinders.

OREGON	Thickness	ID	OD	Chain Size	Product Code
OR534-18	1/8"	7/8"	5-3/4"	1/4", .325", 3/8" LP	
OR534-316	3/16"	7/8"	5-3/4"	3/8" std., .404"	

C

OREGON Replaces Description Product Code

Tygon® Fuel Line

OREGON	I.D.	O.D.	Length	Product Code
Compliant with EPA & CARB regulations; E10 compatible				
07-450	1/4"	3/8"	50'	
Compliant with EPA & CARB Regulations; E85 compatible				
Sold in bags of 10 pieces; priced per piece				
07-551	1/8"	1/4"	1'	
07-552	3/16"	5/16"	1'	
07-553	3/32"	3/16"	1'	
07-555	0.080"	0.140"	1'	
Non-Compliant with EPA & CARB Regulations; E10 compatible				
07-153	3/32"	3/16"	50'	
07-157	1/8"	3/16"	25'	
07-151	1/8"	1/4"	50'	
07-152	3/16"	5/16"	50'	
07-150	1/4"	3/8"	50'	
07-154	1/16"	1/8"	50'	
07-155	0.080"	0.140"	50'	
07-156	0.117"	0.211"	25'	
07-158	5/16"	7/16"	50'	

⚠ Tygon fuel lines, Oregon fuel lines, and primer bulbs are compatible with up to 10% Ethanol blend fuels unless otherwise stated. Using Ethanol blends higher than 10% may speed deterioration and cause leakage.

Oregon® Fuel Line

- Oregon Fuel Line is a specially formulated gas and oil vinyl tubing — made for use with lawnmowers, chainsaws, and snowmobiles
- Maintains air tight seal on fittings — even in extreme temperatures
- Translucent material resists swelling or hardening
- Compare to Tygon®

OREGON	ID	OD	Length	Product Code
Non-Compliant with EPA and CARB regulations; E40 Compatiable				
07-254	1/16" (.062")	1/8" (.125")	25'	
07-262	1/16" (.062")	1/8" (.125")	12-1/2'	
07-263	.080"	.140"	12-1/2'	
07-255	.080"	.140"	25'	
07-253	3/32" (.093")	3/16" (.187")	50'	
07-261	3/32" (.093")	3/16" (.187")	25'	
07-264	.117"	.211"	12-1/2'	
07-266	3/32" (.093")	13/64" (.203")	25'	
07-256	.117"	.211"	25'	
07-265	1/8" (.125")	3/16" (.187")	12-1/2'	
07-257	1/8" (.125")	3/16" (.187")	25'	
07-259	1/8" (.125")	1/4" (.250")	25'	
07-251	1/8" (.125")	1/4" (.250")	50'	
07-260	3/16" (.187")	5/16" (.312")	25'	
07-252	3/16" (.187")	5/16" (.312")	50'	
07-258	1/4" (.250")	3/8" (.375")	25'	

OREGON	Replaces	Description	Product Code

Fuel Line & Primer Bulbs

07-008	Homelite 63744A	**Fuel Line** Molded Fits XL-12 & Super XL-12 Length: 9"	
07-071	Husqvarna 501 28 59-01	**Fuel Line** Fits chian saws & trimmers 140, 162, 266, 36, & 61	
36-419	Husqvarna 501-51-99-01	**Oil Line** - NEW Husqvarna 61, 266, 268	
07-009	McCulloch 215708 McCulloch 301011	**Fuel Line** Fits McCulloch 1010 series Length: 6-5/16", ID: 3/16"	
07-011	Shindaiwa 20011-8545 Shindaiwa 20011-85459	**Fuel Tube** Fits models T25, T27, C35, & B45	
07-007	Stihl 1119-358-7700	**Fuel Line** Fits 038 Length: 4-15/16"	
07-135	Stihl 1119-358-7702	**Fuel Line**	
07-075	Stihl 1123-358-7701	**Fuel Line** Fits 021, 023, & 025	

Fuel Line

07-136	Stihl 1124-358-7700	**Fuel Line** Fits MS640, 660, 780, 088, & 084	
07-072	Stihl 1127-358-7702	**Fuel Line** Fits 029, 034, 036, & 039	
07-134	Stihl 1128-358-7701	**Fuel Line** Fits MS341, 361, 440, & 460	
07-149	Stihl 1127-647-9400	**Oil Hose** - NEW Fits 026, 034, 036, 064, 066, MS 260, & 361	

C

Chainsaw & Cut-Off Saw Parts

OREGON	Replaces	Description	Product Code

Fuel Line

36-420 Stihl 1130-647-9400

Oil Hose - NEW
Fits Stihl 017, 018, MS170, & MS180

07-167 Stihl 1123-141-8600

Impulse Line - NEW
Fits Stihl 021, 023, 025, MS210, MS210C, MS230, MS230C, MS250, & MS250C

Primer Bulbs

OREGON	OEM	Type	Series	OD	HT	Product Code
49-020	Walbro 188-12	Primer bulb	—	.60"	.55"	
49-026	Walbro 188-11	Primer bulb	WR series	.575"	.390"	
49-027	Walbro 188-13	Primer bulb	HDA series	.725"	.60"	
49-028	Zama 0057003	Primer bulb	CIQ series	.675"	.575"	

Tygon® fuel lines, Oregon® fuel lines and primer bulbs are compatible with up to 10% Ethanol blend fuels unless otherwise stated. Using Ethanol blends higher than 10% may speed deterioration and cause leakage.

Fuel & Oil Caps

07-004 Homelite 69451
Homelite UP06862

Duck Bill Valve
Fits XL, XL2, Super 2, & Homelite 63718
Used in fuel cap

56-019 Stihl 0000-350-0520

Fuel Cap
Fits 023, 025, 026, & 028

07-131 1130-350-0500

Fuel Cap
Fits 017, 018, 019, MS170, 180, & 190

07-132 0000-350-0531

Fuel Cap
Fits 066 & MS660

56-018 Stihl 0000-350-0510

Oil Cap

C

Fuel Filters

OREGON	Replaces	Description	Product Code
07-215	Universal	**Fuel Filter** For 2-cycle engines on chainsaws, trimmers, & blowers using porous plastic filter (40 micron) Inlet: 3/16"	
07-206	Echo 131205-06530 Tillotson OW-802	**Fuel Filter** Use with 1/8" fuel line OD: 9/16", length: 1-1/2"	
07-201	Homelite 64083-1 Tillotson 95-182	**Fuel Filter - Felt** Use with Oregon® 07-206 OD: 9/16", ID 1/4", length: 1"	
07-213	Husqvarna 503-4432-01 Husqvarna 5018776-01 Husqvarna 5018776-02 Husqvarna 5021618-01	**Fuel Filter** For 3/16" fuel line Fits models 36, 40, 41, 42, 45, 50, 51, 61, 66, 181, 281, 234, 298, 2100, 2101, & 394 Pro (165R, RX, 244RX)	
07-207	John Deere PT12362 Tillotson OW-497 Weed Eater 24841 Poulan 530091878	**Fuel Filter** Use with 1/8" fuel line OD: 13/16", length: 1-1/2"	
07-200	McCulloch 93720 McCulloch 216985 Homelite 49422 Homelite UP0387 Homelite 96639	**Fuel Filter** For most saws with 1/8" in tank pickup OD: 1/2", length: 1-1/4"	
07-204	McCulloch 63932	**Felt** OD: 3/4", length: 1"	
07-066	Poulan #530095646	**Fuel Filter** Use with 1/8" fuel line	
07-133	0000-350-3506	**Fuel Fliter** Fits TS410 & TS420	
07-109	Stihl 1115-350-3503	**Fuel Filter** Use with 1/4" fuel line For most models of chainsaws OD: 23/32", length: 1-3/4"	
07-217	Stihl 1120-350-3500	**Fuel Filter** For chainsaws Fits models 021, 023, 025, 020T, 070, 034, 038, 029, & 036	

C

Chainsaw & Cut-Off Saw Parts

OREGON	Replaces	Description	Product Code

Fuel Filters

07-205	Stihl 1110-358-1800	**Foam Fuel Filter** OD: 5/8", length: 1-1/4"	
07-214	Walbro 125-527	**Fuel Filter** Dual-filtration felt & stainless steel mesh element	
07-219	Walbro 125-528	**Fuel Filter** For 3/16" fuel line & engines up to 80CC	
07-137	Walbro 125-552	**Fuel Filter** Universal	
07-208	Zama ZF2	**Fuel Filter** For 3/16" fuel line Use on small CC engines 175 micron	
07-209	Zama ZF3	**Fuel Filter** For 1/8" fuel line Use on larger CC engines 175 micron	
07-210	Zama ZF4	**Fuel Filter** For 3/16" fuel line Use on larger CC engines 175 micron	
07-211	Zama ZF5	**Fuel Filter** For 1/4" fuel line Use on larger CC engines 175 micron	

Starter Pulleys

55-811	Homelite 97768A	**Starter Pulley** Fits XL, Super 2, 240, & 245 series OD: 2-9/16" Use Oregon® 43-528 (OBS) replacement spring	
31-002	Husqvarna 5031024-05	**Starter Pulley** Fits chainsaw models 61, 268, & 272	
31-006	Stihl 1123-195-0400	**Starter Pulley** Fits chainsaw models 017, 018, 023, & 025	

C

OREGON	Replaces	Description	Product Code

Starter Springs

OREGON	OEM No.	Description	Product Code
43-540	Husqvarna 50 15 204 01	Starter Spring Fits 61 Rancher, 162, 181, & 266	
43-562	Husqvarna 50 17 631 01	Starter Spring Fits 136, 141, 240, 245, 334, 335, 336, 338, 339, 36, 40, 41, 45, 50, 51, & 55	
43-540	Jonsered 501 52 04 01	Starter Spring Fits 630, 630 Super, & 670	
43-694	Stihl 1118-190-0600	Starter Spring Fits 024, 026, 028, 032, 034, 08S	
43-699	Stihl 1117-190-0601	Starter Spring Fits 038, 041 (5816401...), 045 (5919431...) 048, 050, 051 (674961...), 056, & 075	
43-685	Stihl 4112-195-1600	Starter Spring Fits FS60, 61E, 65AVE, 80, 80E, 90AVE	

Miscellaneous Saw Part

56-030 Stihl

Worm and Spring
Fits 029, 034, 036, & 039

Carburetor Mounting/Intake Gasket Assortments

OREGON	Qty.	Description	Product Code
08-010	114	Gasket/Intake 2-cycle engines, standard refill quantity 10	

Components

	10	Intake gasket for HU*
	5	Intake gasket for HK*
	5	Intake gasket for HK*
	10	Intake gasket for HCA, HDA*
	5	Intake gasket for HL*
	5	Intake gasket for HS*
	10	Intake gasket for WS**
	5	Intake gasket for MDC**
	2	Intake gasket for WZ**
	2	Intake gasket for WZ**
	5	Intake gasket for HL*
	10	Intake gasket*
	10	Intake gasket*
49-262	10	Intake gasket
	10	Intake gasket
	5	Gasket material
	5	Intake gasket*

* Tillotson **Walbro

C

Commercial Parts

OREGON	Replaces	Description	Product Code

Blade Bolts & Nuts

48-011	Exmark 513547 Toro 99-2842	**Deck Wheel Bolt** For Lazer Z models	
04-125	Jacobsen 182248 Scag 4001-41 Wright Stander 11990007 Ferris 1525019-76	**Blade Bolt** For most commercial mowers Thread: 5/8-11, length: 9-1/2"	

Eye Bolts

48-006	Scag 43025	**Turnbuckle** For 32" - 61" Cut Use with Oregon® 48-072 & 48-071	

Cables

46-416	Scag 48828	**Steering Cable Assembly** Fits ST17KA & 19KH	

Caster Parts

48-200	Bobcat 36129 Bunton PL0457 Bunton PL0458 John Deere PT8663 Exmark 302122	**Caster Support Arm** Fits Bunton and John Deere 32", 36" & 48" with 6" wheel assembly ID: 3/4", mounting holes: 3/8" Use with Oregon 48-205 caster & bushing 45-078 (use 1)	
48-135	Bobcat 36526	**Yoke** 9" caster Use with Oregon 48-132 support arm Use with Oregon 72-796 pneumatic wheel	
48-205	Bobcat 36013A Bunton PL0556 John Deere PT8670	**Caster Yoke Assembly** Use with Oregon 09-801 & 72-745	
48-202	Scag 45006 Wright Stander 9346001	**Double Sided Caster Yoke** Use with Oregon 09-804 spacer Use with Oregon 72-795 wheel assembly	

C

OREGON	Replaces	Description	Product Code

Caster Parts

48-237	Wright 93460008	**Double Sided Caster Yoke** Yoke inside width: 5-1/4" Shaft length: 6-5/8" Shaft diameter: 1-1/4"	
45-127	Scag 48100-01 Velke VPIVOT BUSH	**Bushing for Caster Support Arm** For steering shaft bushing for pivot wheel on 12, 13, & 17 HP Turf Runner	
45-266	Toro 110-8837	**Caster Wheel Bearing Kit** Includes bearing cones, bearing cups, bearing spacers, & bearing seals	

Coupler Assemblies

48-148	Bobcat 38204 Exmark 323275/324157 Scag 48226/46513	**Transmission Coupler** For all 5 speeds ID: 5/8" OD: 1.138", length: 2" 36-tooth & splined	

Damper Cylinders

48-233	Cub Cadet 02003622	**Damper Cylinder – Return to Neutral** Fits ENFORCER 44, ENFORCER 48, ENFORCER 54, Z-Force 44, Z-Force 48, Z-Force 50, Z-Force 54, Z-Force 60, Z-Force Pro 48, & Z-Force Pro 54	
48-232	Exmark 116-0027	**Damper Cylinder – Motion Control** Fits Next Lazer ASX (S/N 850,000 & up) & Next Lazer Z air cooled (S/N 790,000 & up) Threaded studs: 5/16-18 (both ends) Extended length: 13", closed length: 9 1/2"	
48-236	Exmark 109-2339 Exmark 1-523027	**Damper Cylinder – Motion Control** Fits Lazer Z AS (S/N 790,000–849,999), LZE20KA484, LZE22KA484, LZE24KA524, LZE27KC604, LZS22KA48, LZS23KC524, LZS24KA524, LZS25EKC604, LZE730KA604, LZE740EKC604, LZE740KC604, LZS651KA484, LZS680KC524, LZS691KA524, LZS730EK, LZX24KA526, LZX27KC526, LZX27KC606, LZX29EKC606, LZX29KA606, LZX34KC606, LZX34KC726, LZS27KC604, LZS29EKC, LZS29KA724, LZS29PKA604, LZS29PKA606, LZS29PKA724, LZX23KC486, LZS25KC604, LZS27KC524, LZX38KC606, LZX38KC726 (S/N 920,000 & up), LZE600KA484, LZE691KA524, LZE730EKC604, LZS740KC524, LZS740KC604, LZS740PKA604, LZS740PKA724, LZS749EKC604, LZS749EKC724, LZS801KA524, LZS801KA604, LZS801KA724 , LZS801PKA604, LZS801PKA724, LZX680KC486, LZX740EKC526, LZX740KC526, LZX740KC606, LZX749EKC606, LZX801KA606, LZX940EKC606, LZX940KC606, LZX940KC726, LZX980EKC726, LZX980KC606, & LZX980KC726 (S/N 312,000,000 & up) Hole diameter (both ends): 5/16", extended length: 10", closed length: 7"	

C

OREGON	Replaces	Description	Product Code

Hydrostatic Drive System — Wheel Motors

27-500
Exmark 1-523328
Exmark 103-6988
Parker TF0240US081AADD

Wheel Motor
Replaces Parker wheel motor
Fits Lazer Z & Lazer Z HP
serial 440, 000 to 509, 999

27-501
Exmark 1-603718
Parker TE0230FS250AAFA
Parker TE0230FS250AADD

Wheel Motor
Replaces Parker wheel motor
Fits Turf Tracer, Tracer XP, & Viking

27-503
Parker TE0230US250AA
Encore 453068

Wheel Motor
Replaces Parker wheel motor
Fits Encore walk-behinds, Encore Prowler
Front Cut, Toro, & Husqvarna

27-502
Parker TF0240LS080AAFB
Parker TF0240LS080AAKY
Scag 482639
Scag 481529
Scag 4159280
Hustler 602382

Wheel Motor
Fits Scag Turf Tiger, Tiger Cub, Wildcat, SCR, & SMST,
Bobcat / Bunton / Ryan Procat, Predator, Bunton Missile,
Bunton Torpedo & other models, & Hustler X-One

27-504
Hydro-Gear HGM-15E-3138
Scag 483190
Hustler 600922
Ferris 5100407

Wheel Motor
Replaces Hydro-Gear wheel motor.
Fits Scag Tiger Cub, Turf Tiger, Wildcat, Z Cat
Ferris IS1500ZX, IS200Z (15IN3/REV - LH), & Hustler

C

Spacers & Bushings

OREGON	Replaces	Description	Product Code
09-801	Bobcat 32044A Bunton PLO417 John Deere PT8886	**1/4" Yoke Spacer** OD: 1-1/4", ID: 3/4", thickness: 1/4"	
09-802	Bobcat 64163-12 John Deere PT8888 Kees 363033 Snapper 7-6436 Bunton PLO617	**Blade/Spindle Spacer** OD: 1", ID; 5/8"; thickness: 1/4" Exmark 303164 Ferris 154177	
09-803	Bobcat 64163-22 Ferris 1541476	**1/2" Caster Yoke Spacer** ID: 1", OD: 1-3/4", thickness: 1/2"	
48-320	Bobcat 48053-2A	**Bushing** Use with Oregon® 48-207	
09-804	Bunton PJH1054 John Deere M85178 Scag 43037-01 Exmark 303044 Jacobsen 553668	**Bushing** ID: 7/8", OD: 1-1/2", thickness: 1/2"	
09-808	Bobcat 64163-07	**1/4" Yoke Spacer** ID: 1", OD: 1-3/4", thickness: 1/4"	
48-009	Exmark 513547	**Spanner Bushing** ID: 1/2", OD: 3/4", length: 4-5/8" Fits Turf Ranger, Turf Tracer & Viking Metro models 80,000 series & higher with 36", 48", 52", & 60" deck	
48-235	Exmark 103-3037	**Splined Blade Bushing** For mowers using blades with 15/16" center hole	
09-006	Grasshopper 421200	**Fiber Washer**	
45-030		**Bearing Caster Yoke**	
45-188	Scag 43022 Bobcat 43180 Ferris 1541659	**Spanner Bearing** ID: 1/2", OD: 5/8", length: 4-1/4"	
48-141	Scag 43278 Scag 43038 Encore 363170 Jacobsen 552187	**1/4" Blade Spacer** ID: 5/8", OD: 1-1/2", thickness: 1/4"	

09-801

09-802

09-803

09-804

45-030

45-125

45-188

48-320

C

OREGON	Replaces	Description	Product Code

Fuel Tank Strap

76-143	Scag 421239	**Fuel Tank Strap** Width: 1", length: 33-3/4" Thickness: .040" 1/4" hole on each end	

Brake Bands / Brake Assemblies

48-145	Scag 48210 Snapper 1-7048	**Brake Band** For 36", 40", 48" , 52", & 61" midsize Fits Snapper Pro 7	

Can't find what you're looking for?
Try us online to search the latest products available.

OregonProducts.com

C

OREGON	Replaces	Description	Product Code

Universal

60-426 Universal

Universal Control Cable
Converts from positive to negative action, 1/4" bolt handle bar mount, plastic conduit cuts easily to replace applications listed below. Adjust control to full throttle position (+ = longest, - = shortest) for inner wire measurement
Conduit size: 3/16", conduit: 71", inner wire: 76",
inner wire dia.: .060", wire travel: 1-5/8"

OEM Number	Conduit Length	Action	Inner Wire Extension
John Deere			
AM115246	53-3/8"	+	2-1/4"
Lawn-Boy			
684693	52-1/2"	+	1-1/2"
Murray			
42096	41-1/4"	+	2"
42775	42-1/2"	+	2"
42877	41-1/4"	+	2"
42878	47-1/2"	+	2"
42949	39"	+	2"
Noma			
52061	46-1/2"	+	2-1/2"
52769	46-1/2"	+	2-1/2"
Roper			
107701X	43"	+	2-1/4"
111274X	47"	+	1-3/4"
111903X	44"	+	2"
111930X	65-1/8"	+	2-1/8"
Snapper			
1-1251	48"	+	1-3/4"
1-6565	58"	+	3-3/4"
1-8088	46"	+	1-3/4"
1-8186	46-1/2"	+	2-1/2"
1-8187	42"	+	2-1/2"
1-8237	13-3/4"	+	3-1/4"
1-8353	12-1/2"	-	1"
1-8486	12-1/2"	-	1"
1-8486	11"	-	2"
1-8780	43-1/4"	-	2-1/4"
1-8785	45-1/2"	+	3-7/8"

OEM Number	Conduit Length	Action	Inner Wire Extension
Snapper			
1-8839	42-3/4"	-	1-1/2"
1-8840	42-3/4"	-	1-1/2"
1-8889	12-1/2"	-	1"
1-9254	45"	+	3-1/2"
1-9266	48"	+	3-1/2"
2-3449	46-1/2"	+	2-1/2"
2-3829	62"	-	1"
76065	51"	+	2"
Toro			
27-6500	42"	+	2"
28-4810	54-1/2"	+	2"
28-6170	59"	+	2"
28-6740	38"	+	2"
29-9610	44-1/2"	+	2"
29-9612	44-1/2"	+	2-1/8"
33-2530	38"	+	1-7/8"
33-2531	42"	+	1-7/8"
33-2532	59"	+	1-7/8"
33-2533	49"	+	1-7/8"
33-2534	54-1/2"	+	1-7/8"
33-2535	39-1/2"	+	1-7/8"
33-2536	62"	+	1-7/8"
40-5520	42"	+	1-7/8"
40-5521	38"	+	1-7/8"
40-5522	54-1/2"	+	1-7/8"
40-5523	62"	+	1-7/8"
40-5524	45"	+	1-7/8"
40-5525	49-1/2"	+	1-7/8"
40-5526	35-1/2"	+	2"
53-7831	46-1/2"	+	3-7/8"

C

Control Cables

Universal

OREGON	Replaces	Description	Product Code
60-400	Murray 42877 Murray 42093 Murray 42096 Noma/AMF 57353 Noma/AMF 53415	**Throttle Control Cable Assembly** Positive detent in stop & fast position, 1/4" bolt mounting hole, proper travel for B & S and Tecumseh automatic choke engines, and all plastic, low friction conduit with galvanized inner wire eliminates corrosion for smoother running Conduit size: 3/16", conduit length: 60", inner wire: .054", wire travel: 1-3/8"	
514366		**Blister Pack** - 1 of 60-400	
60-408	Snapper 7-6065	**Throttle Control Cable Assembly** Positive action control, deluxe model using heavy gauge metal, replaces mounting bracket and lever, sure-grip T-knob, universal style for center or side mounting with hole for 1/4" bolt Conduit length: 51", inner wire: .054", inner wire length: 53", wire travel: 1-1/2"	
60-409		**Throttle Control Cable Assembly** Positive action control, deluxe model using heavy gauge metal mounting bracket and lever, sure-grip T-knob, for center or side mounting with hole for 1/4" bolt Conduit size: 3/16", conduit length: 69", inner wire: .054", inner wire length: 71"	
60-226		**Throttle Control Cable Assembly** Positive action control, z-bend, no detents Mounting hole spacing: 2", conduit size: 3/16", conduit length: 26-1/4", Inner wire: .054", inner wire length: 32", wire travel: 1-5/8"	
60-210		**Throttle Control Cable Assembly** Plain end – no z-bend Conduit size: 3/16", conduit length: 72", inner wire: .060", wire travel: 1-7/8"	
60-209		**Throttle Control Cable Assembly** Plain end – no z-bend Conduit size: 3/16", conduit length: 54", inner wire: .060", wire travel: 1-3/8"	
60-365		**Throttle Control Cable Assembly** Negative action control – reversible For either 3/4" or 7/8" tubing, slotted mounting for 1-13/16" to 2", spring washer and center mount for 1/4" bolt, detents front and rear Conduit size: 3/16", conduit length: 48", inner wire: .060"	
60-046		**Throttle Control Cable Assembly** **Right-hand** version Conduit size: 3/16", conduit length: 48", inner wire dia.: .060"	

C

OREGON	Replaces	Description	Product Code

Universal

60-036

Throttle Control Cable Assembly
Left-hand version
Positive action control, for most popular for panel mounting on riding mowers, tractors, and self-propelled walk-behinds

60-106

Throttle Control Cable Assembly
Positive action control, steel control with aluminum cover plate
Suggested mounting: panel or bolt thru center
Conduit size: 3/16", conduit length: 48", inner wire dia.: .060"

60-160

Throttle Control Cable Assembly
Extra long wire and conduit for use on walk-behind mowers with front throttle controls, all steel construction
Conduit size: 3/16", conduit length: 66", inner wire length: 71"

60-860

Throttle Control Cable Assembly
Same as Oregon® 60-160 but with 48" inner wire
Conduit size: 3/16", conduit length: 43-1/2", inner wire length: 48",
wire travel: 1-1/2"

AMF / Dynamark / Noma

46-330 301503

Zone Safety Control Cable
Safety control, blade engagement for walk-behind mowers, 1/4" eyelet on one end, z-bend on the other end
Conduit length: 23", inner wire length: 56"

AYP

60-004 700417

Throttle Control Cable Assembly
20" and 22" side and rear discharge, Z-bend
Conduit size: 3/16", inner wire length: 49-1/2"

46-322 146323

Drive Control Cable
Self-propelled control for 22" self-propelled mower, flexible inner wire with spring on end, Z-bend on spring
Conduit length: 56"

46-325 130861

Zone Safety Control Cable
Zone control cable for 22" walk-behind push mower model PP751, die cast z-bend on each end
Conduit length: 52", cable length: 59-3/16"

C

Control Cables

OREGON	Replaces	Description	Product Code
AYP			
60-000	851462	**Throttle Control Cable Assembly** For 20" walk-behind mowers (1997 & newer) Conduit length: 63-1/2", cable length: 68"	
60-525	532175067 532169676 169676 175067	**PTO Cable Kit** Fits LT16542, LT18542, LT18542A, LT18542B, LTH1342, LTH1342A, LTH1342B, LTH1342C, LTH1742A, LTH1742B, LTH1742C, LTH1742D, LTH18542A, LTH18542B, LTH18542C, LTH2042A, LTH2042B, LTH2042C, YTH130, YTH1842A, YTH1842B, & YTH1842C	
60-526	532435111 532408714 532197257 435111 408714 197257	**PTO Cable** Fits CT126, LTH1438,LTH1538, LTH18538, YT16542, & YT1942 Length 69"	
60-105	532133107 133107	**Zone Safety Control Cable** For walk-behind mowers built between (1999–2004) Conduit length 56", cable length: 62"	
60-103	532184588 184588	**Drive Control Cable** For self-propelled mowers models 219611X83E, 961240001, 96143000601, 96143000600, 954224095, & 9612001802 Conduit length 57", cable length: 60-1/4"	
60-104	532189182 189182	**Vari-Speed Drive Control Cable** Assembly for self-propelled mower models 96143000100 & 954223883 Conduit length 59", cable length: 68-3/4"	
60-102	532407816 407816	**Drive Control Cable** For self-propelled mower models 96142003700, 96142006900, 96142008400, 96142008401, 96143006105, 96143008001, 96143005800, & 961430061 Conduit length 59-1/2", cable length: 68-1/2"	
60-101	532440855 532428460 440855	**Brake Cable** For 26" cut rider models 96024000100 & 9622000700 Conduit length 36-1/2", cable length: 44-1/2"	

C

OREGON	Replaces	Description	Product Code

AYP

60-108	532156581 532168552 156581 168552	**Zone Safety Control Cable** For walk-behind mowers Conduit length 53-1/2", cable length: 59-1/2"	
60-107	532176556 176556	**Zone Safety Control Cable** For walk-behind mowers built between (2006–2010) Conduit length 46", cable length: 52"	
60-110	532283281 183281	**Zone Safety Control Cable** For walk-behind mowers built between (2005–2010) Conduit length 46-1/2", cable length: 52-1/2"	
60-109	532183567 183567	**Zone Safety Control Cable** For walk-behind mowers models Fits 5521CHV, 5521RS, 62522SH, 6522SL, & 65021CHV (2005–2010) Conduit length 53-1/2", cable length: 59-1/2"	
74-021	AYP 158152 AYP 582991501 Husqvarna 582991501	**Control Cable** - NEW Fits AYP224110X92E0, 2244110X92E2, 224111X83E, 96114001500, 96114001501, 96114011800, HD6A22HWD, PR600N22S, PR600N22SH, 96114000311, 96114000312, 96114000313, 96114000314, 96114000315, 96114000316, 96114000317, 96114000403, and 96114001200 Cable Length: 55 1/2" Conduit Length: 48"	

Bobcat

60-410	118020-07	**Throttle Control Cable Assembly** New style – long handle Conduit size: 3/16", conduit length: 29", inner wire dia.: .060", inner wire length: 31-1/2", wire travel: 1-5/8"	

Cub Cadet

60-008	831-0823A 831-0823 831-0798 731-0823	**Throttle Control Box** For riders and tillers Does not include throttle wire	
60-016	811-0185 811-00303 811-00500	**Throttle Control Head** For walk-behind mowers Does not include throttle wire	

C

Control Cables

OREGON	Replaces	Description	Product Code	
Cub Cadet				
60-005	946-0875 746-0875	**Housing Only** Fits Oregon® 60-016		
60-007	946-0876 746-0876	**Throttle Lever Only** Fits Oregon® 60-016		
46-044	946-0897A 946-0897 746-0897A 746-0897	**Auger Clutch Cable** For many two-stage snow throwers (1995–2012) Total length: 49"		
46-338	946-0901 746-0901	**Chute Deflector Control Cable** Fits 31A snow throwers (1998–2005) Total length: 54-3/8", conduit length: 43-7/8"		
46-046	946-0902 746-0902	**Chute Control Cable** For some two-stage snow throwers (1998–2010) Total length: 73", conduit length: 66"		
46-047	946-0903 746-0903	**Chute Control Cable** For some two-stage snow throwers (1998–2010) Total length:73-1/2", conduit length: 66-1/2"		
46-048	746-0949A 746-0949	**Steering Cable** For some two-stage snow throwers (1998–2010) Total length: 34-7/16", conduit length: 31-7/8"		
46-341	946-0951A 746-0951A 746-0951	**Auger Idler Cable** Fits 31A snow throwers built (1998–2014) Total length: 16-5/16"		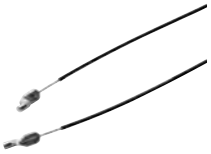
46-340	746-0952	**Drive Control Cable** Fits 31A snow throwers (1998–2014) Total length: 26-1/2"		

C

Cub Cadet

OREGON	Replaces	Description	Product Code
46-049	946-0956C 946-0956B 746-0956C 746-0956B 746-0956A 746-0956	**Steering Cable** For some two-stage snow throwers (1998–2012) Total length: 39", conduit length: 36-1/2"	
46-050	746-0970	**Deck Lift Cable** Fits some RZT17, RZT22, RZT42, & RZT50 Total length: 5-7/8"	
46-051	946-1130 746-1130	**Safety Control Cable** Fits walk-behind mower 11A-439Q710 2006 Total length: 54", Conduit length: 40"	
46-032	946-04229B 946-04229 746-04229B 746-04229	**Drive Clutch Cable** For many two-stage snow throwers (2005–2012) Total length: 45-1/2"	
46-033	946-04230A 946-04230 746-04230A 746-04230	**Auger Clutch Cable** For many two-stage snow throwers (2005–2012) Total length: 48"	
60-137	946-04352A 946-04352 746-04352A 746-04352	**Throttle Control** Fits some GT1554, LT1042, LT1054, LT1046, LT1050, SLT1550, SLT1554, & SLTX1050 with Kohler engines (2007-2009), RZT-L50KW, & RZT-L54KW (2013) Total length: 39-5/8", conduit length: 38"	
46-038	946-04477 746-04477	**Chute 4-Way Control Cable** For some two-stage snow throwers with joystick chute control (2009-2012) Total length: 61-5/8", conduit length: 54"	
46-039	946-04528B 946-04528A 746-04528B 746-04528A	**Chute 4-Way Control Cable** For some two-stage snow throwers with joystick chute control 2009-2012 Total length: 62", conduit length: 54-1/4"	
60-140	946-04556 746-04556	**Choke/Throttle Cable** Fits some GT, GTX, LGT, LGTX, LTX, & SLTX (2009-2013) Total length: 39-5/8", Conduit length: 38"	

C

Control Cables

OREGON	Replaces	Description	Product Code

Cub Cadet

46-041	946-04618B 946-04618A 946-04618 746-04168A	**Deck Engagement Cable** For some LTX1040, LTX1042, LTX1045, LTX1046, & LTX1050 (2009-2013) Total length: 60", Conduit length: 43"	
60-057	01004020	**Choke Cable** For Z-Force mowers using Briggs & Stratton engines Conduit length: 61-1/4", total length: 62-3/4"	
60-056	02000478	**Choke Cable** Fits Z-Force 44, 48, & 50 mowers using Kohler engines Conduit length: 43", total length: 44-1/2"	
60-039	946-1085A 746-1085A 746-1085	**Choke Cable** Fits 1170, 1180, 1212, 1800, LT1042, LT1045, LT1046, & LT1050 mowers Conduit length: 37", total length: 39"	
60-059	746-04120	**Choke Cable** Fits i1046, i1050, GT1222, GT1554, SLT1550, SLT1554, LT1018, LT1022LT1024, LT1042,LT1045, LT1046, & LT1050 mowers Conduit length: 40-1/2", inner wire length: 42-1/2"	
60-062	946-04143 746-04143	**Choke Cable** Fits RZT22 mowers Conduit length: 61", total length: 62-1/2", wire travel: 1-1/2", inner wire dia.: .062"	
60-042	946-1100 746-1100	**Throttle Cable Control Assembly** Fits GT2542, GT2544, GT2550, i1046, i1050,1525, 1527, SLT1550, SLT1554, LT1042, LT1045, LT1046, & LT1050 mowers Conduit length: 38", inner wire length: 40-1/2", wire travel: 1-1/2", inner wire dia.: .062"	
60-021	946-0630A 746-0630A 746-0630	**Throttle Wire** For many riders and walk-behind mowers Total length: 42"	
60-014	946-0634 746-0777 746-0641 746-0636 746-0635 746-0634A 746-0634 746-0421 746-0419 746-0418	**Throttle Wire** Fits 674 & 694 series riders Total length: 38"	

C

OREGON	Replaces	Description	Product Code

Cub Cadet

60-012-0	946-0674A 746-0841 746-0674A 746-0674 746-0672 746-0633 746-0472	**Throttle Wire** For many walk-behind mowers Total length: 58"	
46-006	946-0898 746-0898B 746-0898A 746-0898	**Clutch Control Cable** For many snow throwers (1995 & newer) Total length: 43"	
46-005	946-0910A 746-0910A 746-0910	**Clutch Control Cable** For many snow throwers (1995 & newer) Total length: 42-1/4"	
46-310	946-0552 746-0552	**Safety Control Cable** Fits S621 self-propelled mowers Total length: 55-1/2"	
46-320	946-0550 746-0550	**Safety Control Cable** For many walk-behind mowers (1995–2000) Total length: 46-3/8"	
46-321	946-0553 746-0553	**Safety Control Cable** For many walk-behind mowers (1995–1999) Total length: 43-1/8"	
46-317	946-0477A 746-0477A 746-0477	**Safety Control Cable** For many walk-behind mowers (1983–1989) Total length: 51-1/2"	
46-316	946-0554 746-0554	**Safety Control Cable** Fits P418 walk-behind mowers (2001) Total length: 47-3/4"	
60-045	946-0912 746-0912	**Safety Control Cable** For many walk-behind mowers (1993–2000) Total length: 51"	
46-004	946-0713A 746-0713A 746-0713	**Self Propelled Control Cable** For many walk-behind mowers (1999–2004) Total length: 57"	

C

Control Cables

OREGON	Replaces	Description	Product Code

Cub Cadet

60-527	946-04173E 946-04173D 946-04173C 946-04173B 746-04173E 746-04173D 746-04173C 746-04173B 746-04173A 746-04173	**Deck Engage Cable** Fits 13**7** model riders built after 2004 Total length 55"	
60-528	946-04206A 746-04206A 746-04206	**Speed Control Cable** Fits 12**7** model self-propelled mowers (2008–2010) Total length 79"	

Dixie Chopper

60-001	68250	**Throttle Control Cable Assembly** Length: 23-5/8"	

Excel (Hustler)

60-053	785030	**Choke Cable** For Fast Trak with 16 HP Honda engine Conduit length: 61-1/4", cable length: 63-1/4", wire travel: 2"	
60-054	786657	**Choke Cable** For Fast Trak with Briggs & Stratton engine Conduit length: 48-3/8", cable length: 50-1/4", wire travel: 2-1/4"	

Gravely

60-220	8226	**Throttle Control Cable Assembly** Positive action, no detents, nylon knob Suggested mounting: on the side of panel for tractor applications Conduit size: 3/16", cable length: 48", inner wire: .060", wire travel: 1-3/4"	

Honda

46-306	17910-VA3-S01 17910-VA3-003	**Control Cable** Fits HR194, HR215, & HR216, 4 and 5 HP engines Aviation-style wire Conduit length: 53-1/2", total length: 57"	

C

OREGON	Replaces	Description	Product Code

Honda

46-302	54510-VB5-800	**Transmission Cable** Fits all HR21 series mowers Length: 50"	
46-336	54510-VG4-C01	**Clutch Cable** Fits models HRRK216K, HRT216K, & HRZ216 Conduit length: 49", total length: 57-1/2"	
46-333	54630-VK6-010	**Speed Change Cable** Fits models HRC216K Conduit length: 40-3/4", total length: 47"	
74-016	54530-VG3-D01	**Brake Cable** - NEW Fits HRR216, HRS216, HRT216	
74-018	54530-VK6-700	**Brake Cable** - NEW Fits HRC216K2, HRC216K3	

John Deere

60-079	GY20156	**PTO Control Cable** Fits L100 series tractors 76 inner wire including spring and eyelet Conduit length: 58", wire travel: 17", inner wire dia.: .062"	

McLane

60-009	1013B	**Throttle Control Cable Assembly** Negative action For edgers equipped with Briggs & Stratton engines	

C

Control Cables

OREGON	Replaces	Description	Product Code	
MTD				
60-008	831-0823A 831-0823 831-0798 731-0823	**Throttle Control Box**		
60-016	811-0185 811-00500 811-00303 811-00185	**Throttle Control Head** Use with Oregon® 60-012, 60-013, 60-014, 46-323, or 46-324 throttle wire		
60-005	946-0875 746-0875	**Housing Only** For Oregon 60-016		
60-007	946-0876 746-0876	**Throttle Lever Only** For Oregon 60-016		
60-002	946-0613A 746-0613A 746-0613	**Choke Cable** Fits 600 & 800 series front engine tractors (1989–1997) Total length: 49-1/2", conduit length: 46"		
60-003	946-0616A 746-0616A 746-0616	**Choke Cable** Choke control For lawn tractors Total length: 26-1/8", conduit length: 23-1/8"		
60-124	746-0614A 746-0614	**Choke Cable** Choke control For rear engine riders Length: 40-3/4"		
46-339	946-0896 746-0896	**Chute Deflector Control Cable** Fits 31A snow throwers (1993–2005) Total length: 54-3/8", conduit length: 43-7/8"		
46-044	946-0897A 946-0897 746-0897A 746-0897	**Auger Clutch Cable** For many two-stage snow throwers (1995–2012) Total length: 49"		
46-338	946-0901 746-0901	**Chute Deflector Control Cable** Fits 31A snow throwers (1998–2005) Total length: 54-3/8", conduit length: 43-7/8"		

C

OREGON	Replaces	Description	Product Code	
MTD				
46-046	946-0902 746-0902	**Chute Control Cable** For some two-stage snow throwers (1997–2011) Total length: 73", conduit length: 66"		
46-047	946-0903 746-0903	**Chute Control Cable** For some two-stage snow throwers (1997–2012) Total length: 73-1/2", conduit length: 66-1/2"		
46-048	746-0949A 746-0949	**Steering Cable** For some two-stage snow throwers (1998–2012) Total length: 34-7/16", conduit length: 31-7/8"		
46-341	946-0951A 746-0951A 746-0951	**Auger Idler Cable** Fits 31A snow throwers (1998–2014) Total length: 16-5/16"		
46-340	746-0952	**Drive Control Cable** Fits 31A snow throwers (1998–2014) Total length: 26-1/2"		
46-049	946-0956C 946-0956B 746-0956B 746-0956A 746-0956	**Steering Cable** For some two-stage snow throwers (1998–2012) Total length: 39", conduit length: 36-1/2"		
46-050	746-0970	**Deck Brake Cable** For many 42" lawn tractors (2000–2004) Deck lift cable Fits some RZT-42 (2006 & 2008) Total length: 5-7/8"		
60-041	946-1088 746-1088	**Choke Cable** Choke control for many lawn and garden tractor models Total length: 24", conduit length: 23"		
60-039	946-1085A 746-1085A 746-1085	**Choke Cable** Choke control for many lawn and garden tractor models Total length: 39", conduit length: 37"		

C

Control Cables

OREGON	Replaces	Description	Product Code

MTD

60-042	946-1100 746-1100	**Throttle Control Cable Assembly** Throttle control Fits 800 series garden tractors with Kohler twin cylinder OHV engines Total length: 40-1/2", conduit length: 38"	
46-051	946-1130 746-1130	**Safety Control Cable** For many walk-behind mowers (2004–2013) Total length: 54", Conduit length: 40"	
60-021	946-0630A 746-0630A 746-0473	**Throttle Wire** Throttle wire and conduit assembly For walk-behind mowers z-bend on each end Conduit length: 37", total length: 42"	
60-014	946-0634 746-0777 746-0641 746-0636 746-0635 746-0634A 746-0634 746-0421 746-0419 746-0418	**Throttle Wire** Fits 600-609, 660-669, 670-679, & 690-699 series tractors with twin cylinder engines, 820–829, & 840–849 series tractors, Use with Oregon® 60-016 control head Conduit length: 35-1/2", total length: 37-1/4"	
46-319	946-0671A 746-0843 746-0842 746-0671A 746-0671 746-0642 746-0632 746-0474	**Throttle Wire** For 1992 and current mowers and self-propelled mowers with Briggs engines, z-bend on each end Fits model series 086, 118, 528, 426, 456, 108, 106, 412, 518, & 236 Conduit length: 55-1/2", total length: 58-1/4"	
46-323	746-0842	**Throttle Wire** For 1992 and newer push mowers with Briggs & Stratton engines, z-bend on each end Use with Oregon® 60-016 control head Conduit length: 55-1/4", Total length: 55-3/8"	
60-012-0	946-0674A 746-0841 746-0674A 746-0674 746-0672 746-0633 746-0472	**Throttle Wire – Yellow Tip** Use on rear bagging and conduit style mowers (1988–1992) Fits push models 116B, 166B, & 176B; self-propelled models 436B, 476B, 896B, & 886B Use with Oregon 60-016 control head Total length: 58"	
46-006	946-0898 746-0898B 746-0898A 746-0898	**Clutch Control Cable** Fits 600 model series snow throwers 746-0898 (1995–2002) and 700 model series (2003) Total length: 43"	

C

OREGON	Replaces	Description	Product Code

MTD

46-005	946-0910A 746-0910A	**Clutch Control Cable** For snowblowers Total length: 42-1/4", Conduit length: 35-5/8"	
46-310	946-0552 746-0552	**Safety Control Cable** Fits push series 040, 050, 060, 070, 080, & 090; self-propelled series 100, 200, 400, & 700 Total length: 55-1/2", conduit length: 49-7/8"	
46-320	946-0550 746-0550	**Safety Control Cable** Fits push models 040, 050, 060, 070, 080, & 090; self-propelled models 100, 200, 400, & 700, z-bend on each end (1985 & newer) Conduit length: 40", total length: 46-3/8"	
46-321	946-0553 746-0553	**Safety Control Cable** For 1991 and newer push mowers with Briggs & Statton engines, z-bend on each end Conduit length: 36-7/8", cable length: 43-1/8"	
46-317	946-0477A 746-0477A 746-0477	**Safety Control Cable** For walk-behind mowers, braided inner wire, die cast z-bend on each end Conduit length: 43-1/2", total length: 51-1/2"	
46-316	946-0554 746-0554	**Safety Control Cable** For walk-behind mowers, die cast z-bend on each end, braided inner wire, plastic conduit Conduit length: 41-1/4", total length: 47-3/4"	
60-045	946-0912 746-0912	**Safety Control Cable** For walk-behind mowers, braided inner wire with die cast Z-bend on each end Conduit length: 44-3/4", total length: 51"	
46-004	946-0713A 746-0713A 746-0713	**Self-Propelled Cable** For 21" walk-behind mowers Z-bend on each end Overall length: 57", total length: 53"	
46-337	946-04007 746-04007	**Auger Control Cable** Fits 31A snow throwers (2004–2010) Total length: 48-13/16", conduit length: 35-1/4"	
46-342	946-04008 746-04008	**Drive Control Cable** Fits 31A snow throwers (2004–2010) Total length: 50-5/8", conduit length: 33-11/16"	

C

Control Cables

OREGON	Replaces	Description	Product Code

MTD

60-527	946-04173E 946-04173D 946-04173C 946-04173B 746-04173E 746-04173D 746-04173C 746-04173B 746-04173A 746-04173	**Blade Engage Cable** Fits 13**7** model riders (2004 & newer) Length 55"	
60-528	946-04206A 746-04206A 746-04206	**Speed Control Cable** Fits 12**7** model self-propelled mowers (2008–2010) Length 79"	
73-802	746-04228A	**Speed Selector Cable** - NEW For most MTD snow throwers Length: 23"	
73-800	MTD 746-04396	**Speed Selector Cable** - NEW Length: 21.5"	
74-020	MTD 946-0957	**Control Cable** - NEW For most MTD push mowers Conduit length: 37-1/4"	
46-032	946-04229B 946-04229 746-04229B 746-04229	**Drive Clutch Cable** For many two-stage snow throwers (2005-2012) Total length: 45-1/2"	
46-033	946-04230A 946-04230 746-04230A 746-04230	**Auger Clutch Cable** For many two-stage snow throwers (2005-2012) Total length: 48"	
46-034	946-04236 746-04236	**Auger Clutch Cable** For many two-stage snow throwers (2005–2012) Total length: 48", conduit length: 23-1/2"	
46-035	946-04237 746-04237	**Clutch Control Cable** For many single-stage snow throwers (2005–2010) Total length: 42", Conduit length: 26"	
46-036	946-04256 746-04256	**Traction Drive Cable** For many two-stage snow throwers (2005-2008) Total length: 52-1/4", conduit length: 35-1/4"	

C

OREGON	Replaces	Description	Product Code

MTD

60-137	946-04352A 946-04352 746-04352A 746-04352	**Throttle Control** Fits RZT-L50KW & RZT-L54KW (2013) Total length: 39-5/8", conduit length: 38"	
46-038	946-04477 746-04477	**Chute 4-way Control Cable** For some two-stage snow throwers with joystick chute control (2009–2012) Total length: 61-5/8", Conduit length: 54"	
46-039	946-04528B 946-04528A 746-04528B 746-04528A	**Chute 4-way Control Cable** For some two-stage snow throwers with joystick chute control (2009–2012) Total length: 62", conduit length: 54-1/4"	
60-140	946-04556 746-04556	**Choke/Throttle Cable** Fits some 13AR91PP & 13AR91PS (2010) Total length: 39-5/8", conduit length: 38"	
46-041	946-04618B 946-04618A 746-04618A 746-04618	**Deck Engagement Cable** Fits some 13AX90YT, 13AX915T, 13AX915T, 13AT915T, 13AV90GS, 13AX915T, 13AP91GS, 13AP91GT, & 13AQ91GP (2010-2013) Total length: 60", conduit length: 43"	
74-019	MTD 946-04092 MTD 746-04092	**Deck Engagement Cable - NEW** Use with MTD riding mowers Conduit length: 26", inner wire length: 43"	
46-042	946-04640 746-04640	**Auger Cable** For some two-stage snow throwers (2009-2012) Total length: 61-5/8", conduit length: 23"	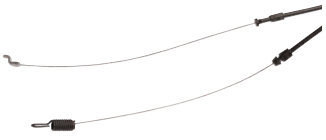
46-043	946-04642A 946-04642 746-04642A 746-04642	**Traction Drive Clutch Control Cable** For some two-stage snow throwers (2009-2012) Total length: 52", conduit length: 36"	

Murray

60-522	21223PA	**Throttle Control Cable Assembly** Plastic covered, positive action control, z-bend, no detents Conduit size: 3/16", conduit length: 60", inner wire: .054", wire travel: 1-5/8"	

C

Control Cables

OREGON	Replaces	Description	Product Code	
Murray				
60-025-0	1101093	**Stop Cable** For 20" walk-behind mower from (2000–2003) 3/16" z-bend one end, 1/4" T on other end Conduit length: 44", inner wire length: 50"		
60-026-0	1101181	**Stop Cable** For 20" and 22" walk-behind mowers (2001–2002) 3/16" z-bend one end, 1/4" T on other end Conduit length: 45-1/4"		
60-030-0	1101360	**Stop Cable** For 20" walk-behind mowers with rear bagger (2001–2003) 3/16" z-bend one end, 1/4" T on other end Conduit length: 42-1/2", inner wire length: 48-3/4"		
60-031-0	1101366	**Stop Cable** For 22" walk-behind mowers with rear bagger (2001–2003), 3/16" z-bend on each end Conduit length: 52", inner wire length: 59-1/4"		
60-043	175441X428	**Choke Control Cable** For many lawn and garden tractor models Overall length: 44", conduit length: 42"		
60-032-0	672835	**Stop Cable** For walk-behind mowers with Tecumseh engines (2000–2003), 3/16" z-bend one end, 1/4" T on other end Conduit length: 52-1/4", inner wire length: 59-1/4"		
60-033-0	672840	**Stop Cable** For walk-behind mowers (2000–2003), 3/16" z-bend one end, 1/4" T on other end Conduit length: 42-1/2", inner wire length: 50"		
60-006	740194	**Throttle Control Cable Assembly** For walk-behind trimmer mowers Overall length: 49", conduit length: 44"		
60-015	776113	**Choke Control Cable** Overall length: 51-3/4"		

C

OREGON	Replaces	Description	Product Code

Murray

60-420	420005	**Throttle Control Cable Assembly** For most Murray walk-behind mowers (1985 & newer) Plastic conduit, converts from positive to negative action Use with Oregon® 04-304 (OBS) mounting adapter Conduit size: 3/16", conduit length: 50", inner wire: 53-1/2", wire travel: 1-5/8"	
60-427	420005	**Throttle control** Heavy-duty version of Oregon 60-420 Fits most Murray walk-behind mowers Metal conduit, converts from positive to negative action (1985 & newer) Use with Oregon 04-304 (OBS) mounting adapter Conduit size: 3/16", conduit length: 50", inner wire: 53-1/2", wire travel: 1-5/8"	
46-300	42569	**Engine Kill Control Cable** For "zone start" mowers, one bolt mounting Length: 53", throw: 7-1/2"	
46-315	43827	**Engine Stop Cable** For walk-behind mowers, z-bend on one end, T form on the other end Conduit length: 49-1/2", inner wire length: 57-7/8"	
46-327	43828	**Engine Stop Cable** For 22" walk-behind mowers. braided cable with die cast z-bend on one end, T form on other end Conduit length: 40", inner wire length: 48-1/2"	
46-328	43881	**Safety Control Cable** Braided wire with die cast z-bend on one end and T form on the other end Conduit length: 46", inner wire length: 54-3/4"	

Scag

60-380	481071	**Throttle Control Cable Assembly** For hydrostatic mowers, positive action Conduit size: 3/16", conduit length: 41-1/4", inner wire: .060", inner wire length: 44-1/8", wire travel: 1-3/4"	
60-123	481091	**Choke Cable** Fits STHM20KH hydrostatic mower Conduit length: 41", inner wire length: 43-1/4"	

C

Control Cables

OREGON	Replaces	Description	Product Code

Scag

60-028	481662	**Throttle Control Cable Assembly** For Kawasaki engine, z-bend on one end Inner wire length: 70", inner wire dia.: .060", wire travel: 1-1/2"	
60-125	48780	**Choke Cable** Push-pull design Conduit length: 55", inner wire length: 58-3/8"	
60-027	48946	**Throttle Control Cable Assembly** T-handle, z-bend Conduit length: 54-1/2", inner wire length: 57-1/2", inner wire dia.: .060"	
46-416	48828	**Steering Cable** Fits ST17KA & 19KH 5/16" barrel on each end Length: 67-5/8", thread End: 3/8-24, cable diameter: .130"	

Snapper

60-991	7011991 11991 1-1991	**Throttle Control Cable Assembly** Positive action control, no detents For 26" and 30" rear engine riders series 1, 2, and 3 with steering column mount – Briggs & Stratton engines Conduit size: 3/16", conduit length: 50", inner wire: .060", wire travel: 1-5/8"	
60-061	7012061 7011130 12061 11130 1-2061 1-1130	**Throttle Control Cable Assembly** Positive action control, no detents For 26" and 30" rear engine 7012061 riders series 1, 2, and 3 with steering column mount – Tecumseh engines Conduit size: 3/16", conduit length: 55", inner wire: .060" (galvanized), wire travel: 1-3/8"	
60-188	7018188 18188 1-8188	**Throttle Control Cable Assembly** Heavy-duty, commercial size, positive action control For walk-behind mowers 21" commercial (1987 & earlier) – Briggs & Stratton engines Conduit size: 7/32", conduit length: 49", inner wire: .072" (galvanized), wire travel: 1-5/8"	
60-201	7018201 18201 1-8201	**Throttle Control Cable Assembly** Heavy-duty, black plastic head with red thumb knob, z-bend For 18" & 21" aluminum deck series 2 with Honda engine Conduit size: 7/32", conduit length: 49", inner wire: .072", wire travel: 1-3/4"	

C

OREGON	Replaces	Description	Product Code

Snapper

60-240	7019254 19254 1-9254	**Throttle Control Cable Assembly** Heavy-gauge steel construction, detents, choke position, polyethylene covered. For 21" aluminum and steel deck series 7, 20" series 0 with Briggs & Stratton, Robin engines Conduit size: 3/16", conduit length: 45", overall length: 47-1/4", inner wire: .054", wire travel: 2-1/4"	
60-353	7018889 7018486 7018353 18889 18486 18353 1-8889 1-8486 1-8353	**Throttle Control Cable Assembly** Negative action control, z-bend, detents, all steel, polyethylene liner For series 4, 5, and 6 riders on rear engine riders, series 6 extra tough models with Briggs & Stratton, Tecumseh engines Conduit size: 3/16", conduit length: 12-1/2", overall Length: 15", inner wire: .054", wire travel: 1-1/2"	
60-786	7060916 7019175 60916 19175 6-0916 1-9175	**Throttle Control** Heavy-duty replacement for Oregon® 60-785 Conduit size: 1/4", conduit length: 45-1/2", inner wire dia.: .072", wire travel: 1-3/8"	
46-024	7012425 12425 1-2425	**Brake Cable** For series 1-5, 25"–30" riders 1/4" barrel on one end, 3 adjustment spacers Length: 52"	

Toro

46-334	74-1791	**Traction Control Cable** Fits mower models: 22030, 22035, & 22036 (1991), 22037B (1993–1995), 22038 (1999–2003), 22040 (1991–2003), 22141 (1997), 22150 (1995–1996), 22158 (1999–2000), 22161 (1998–2001), 22167 (2003–2007), 22171 (1999–2003), 22174 (2001–2003), 22176 (2004–2010), 22187 (2007–2013), 22190 (2007–2010), 22195 (2007–2013), 22197 (2010–2013), 22621 (1991), 22622 (1991–1992), 22700 (1991–1995), & 22701 (1996–1997) Conduit length: 35", total length: 43-1/2"	
46-335	84-9120	**Traction Control Cable** Fits recycler mower models: 22043 (1992–2003), 22045 (1996–2003), 22142 (1997), 22151 (1992–1996), 22154 (1996–1997), 22157 (1998–2003), 22162 (1998–2001), 22168 (2004–2007), 22172 (1999–2003), 22173 (2000–2003), 22177 (2004–2010), 22188 (2007–2013), 22191 (2007–2009), 22196 (2007–2013), & 22198 (2010–2013) Conduit length: 31", total length: 37"	

C

Control Cables

OREGON	Replaces	Description	Product Code

Toro

46-332	103-2683	**Brake Cable** Fits models: 21" heavy-duty recycler/rear bagger lawn mowers 22167, 22176, 22187, & 22190 (2003–2007) Conduit length: 62-1/2", total length: 68"	
74-015	104-8676	**Brake Cable** - NEW For Toro 22" recycler, (2002–2009) Cable length: 58", conduit length: 53-1/2"	
60-529	105-1844	**Traction Cable** For 22" recycler self-propelled mowers (2002–2008) with Personal Pace Length: 46-1/2"	
60-530	105-1845	**Traction Cable** For 22" recycler self-propelled mowers (2002–2009) without Personal Pace Length: 67-1/2"	
60-428	106-0888	**Throttle Cable** Fits models: 21" heavy-duty recycler/rear bagger lawn mower 22167, 22175, 22176, 22187, 22190, 22195, & 22197 (2003–2013) Conduit length: 52-1/2", total length: 56"	
60-531	106-8300	**Traction Cable** Fits 21" Super Recycler self-propelled mowers (2003–2005) with Personal Pace	

Wisconsin

60-687	VE527W	**Push Pull Control** T-handle lock, made by OEM supplier For THD, TJD, & VH4D series engines	

Push-Pull Controls

60-184		**Push-Pull Control** Max. push load: 10 lb., max. pull load: 25 lb., suggested mounting–panel, locking type, versatile locking control eliminates vibration problems and enables the user to adjust for desired friction, light-duty Conduit size: 3/16" (galvanized), conduit length: 92-1/2", overall Length: 102", inner wire dia.: .060"	

C

Push-Pull Controls

60-122

Push-Pull Control
Max. push load: 10 lb., max. pull load: 25 lb., suggested mounting: panel, economical dash control for choke, throttle, and other light-duty applications, easy to install, light-duty Installation hole: 13/32" diameter, conduit size: 3/16" (galvanized), overall length: 96", inner wire dia.: .060"

514371 — **Blister Pack** - 1 of 60-122

60-100

Push-Pull Control
Max. push load: 20 lb., max. pull load: 50 lb., suggested mounting: panel, a heavy-duty non-rotational locking control for a variety of industrial uses, by turning T-knob 1/4 turn, locks securely against spring tension and vibration Conduit size: 1/4" (galvanized), overall length: 104", inner wire dia.: .080"

Conduit/Inner Wire/Assemblies

OREGON	Size	Length	Type	Product Code
74-732	7/32"	50 ft. roll	Standard galvanized conduit For use with SOLID wire	
74-317	3/16"	50 ft. roll	Plastic lined and covered conduit Extra smooth on the inside, protected on the outside. For use with solid wire or stranded cable.	
74-054	.054"	100 ft.	Galvanized inner wire Solid Wire (not for use on motorized vehicles)	
74-072	.072"	100 ft.	Galcanized inner wire Solid Wire (not for use on motorized vehicles)	

74-316

74-054

Conduit Buttons

OREGON	Description	Product Code
02-101	For 7/32" conduit Threaded to attach conduit housing to head assembly quickly and easily	

Throttle Wire Z-Bender

OREGON	Description	Product Code
42-455	Makes wire bending simple, fast and easy For use with .054" and .072" throttle control inner wire. Takes only seconds for a perfect z-bend. Instructions included with each package.	

C

Control Cables

Throttle Accessories

46-200 **Twist Grips – Pair**
Throttle assembly with dummy grip (LH), fits 7/8" tubing

OREGON	Description	Inner Cable	Outer Conduit	Product Code
Mini Bike Throttle Cables				
60-048	3/16" ball	53"	48"	
60-065	3/8" barrel	60"	55"	
60-060	3/16" barrel	65"	60"	
60-092	3/16" ball	100"	62"	

Mini Bike Cables

OREGON	Inner Cable	Outer Casing	End	Product Code
Throttle Cables				
60-048	53"	48"	3/16" ball	
60-060	65"	60"	3/16" barrel	
60-092	100"	92"	3/16" ball	
Brake Cable				
60-065	60"	55"	3/8" barrel	

Cable Clips

OREGON	Fits Tubing	Description	Product Code
02-103	1"	Zinc plated	

Wire Swivel

OREGON	Fits Tubing	Description	Product Code
02-099	1/4"	Fits 1/4" diameter hole. Holds up to .090" wire. Plated. Complete with screw and washer (sold only in sets)	

Swivel Stops

OREGON	Fits Tubing	Description	Product Code
02-098	1/4"	Used to secure the control inner wire at the engine end. Will accommodate all wire sizes up to .090" diameter. Plated	

C

Conduit Clips

OREGON	Description	Product Code
02-107	Single clip Use on all small engines. Holds conduit to engine. Non-rotating special metal tab. Conduit held securely with screw attached to flat surface.	
02-106	Dual clips, zinc plated Ideal for securing two conduits with one bolt. Accepts 3/16" through 7/32" conduits. Use #10 or #12 bolt.	
46-304	Conduit clips Fits Honda GX110, GX120. GX140, GX160, GX240, GX270, GX340, & GX390 series engines. Replaces Honda 16576-891-000.	
02-115	Bolt on clips, zinc plated For clamping throttle control to Briggs & Stratton engines. Replaces Toro 77-8280	

OREGON	Bolt	Conduit Size	Product Code
02-108	#8 – #10	3/16"	
02-111	1"	7/32"	

Squeeze type, zinc plated

Cable Zip Ties

OREGON	Description	Product Code
02-017	50-pack of #02-000 nylon tie Cable tie length: 8"	

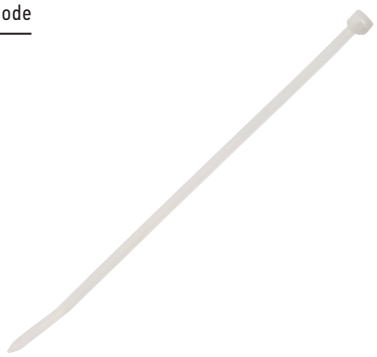

Throttle Accessories

OREGON	Qty.	Description	Product Code
–	–	Throttle accessories	

Components

–	20	Cable clip
–	10	Cable clip
02-115	10	Cable clip
02-099	20	Wire swivel
02-098	20	Wire swivel
02-108	10	Conduit clip
02-111	10	Conduit clip
–	10	Conduit clip
02-106	10	Conduit clip
02-107	10	Conduit clip

C

Drive Parts

OREGON	Replaces	Description	Product Code

Damper Cylinders

48-233	Cub Cadet 02003622	**Damper Cylinder – Return to Neutral** Fits models ENFORCER 44, ENFORCER 48, ENFORCER 54, Z-Force 44, Z-Force 48 , Z-Force 50, Z-Force 54, Z-Force 60, Z-Force Pro 48, & Z-Force Pro 54	
48-232	Exmark 116-0027	**Damper Cylinder – Motion Control** Fits models Next Lazer ASX (S/N 850,000 & up), & Next Lazer Z air cooled (S/N 790,000 & up) Threaded studs: 5/16"-18 (both ends) Extended length: 13", closed length: 9-1/2"	
48-236	Exmark 109-2339 Exmark 1-523027	**Damper Cylinder – Motion Control** Fits models Lazer Z AS (S/N 790,000–849,999), LZE20KA484, LZE22KA484, LZE24KA524, LZE27KC604, LZS22KA48, LZS23KC524, LZS24KA524, LZS25EKC604, LZE730KA604, LZE740EKC604, LZE740KC604, LZS651KA484, LZS680KC524, LZS691KA524, LZS730EK, LZX24KA526, LZX27KC526, LZX27KC606, LZX29EKC606, LZX29KA606, LZX34KC606, LZX34KC726, LZS27KC604, LZS29EKC, LZS29KA724, LZS29PKA604, LZS29PKA606, LZS29PKA724, LZX23KC486, LZS25KC604, LZS27KC524, LZX38KC606, LZX38KC726 (S/N 920,000 & up), LZE600KA484, LZE691KA524, LZE730EKC604, LZS740KC524, LZS740KC604, LZS740PKA604, LZS740PKA724, LZS749EKC604, LZS749EKC724, LZS801KA524, LZS801KA604, LZS801KA724 , LZS801PKA604, LZS801PKA724, LZX680KC486, LZX740EKC526, LZX740KC526, LZX740KC606, LZX749EKC606, LZX801KA606, LZX940EKC606, LZX940KC606, LZX940KC726, LZX980EKC726, LZX980KC606, LZX980KC726 (S/N 312,000,000 & up) Hole diameter: 5/16" (both ends), extended length: 10", closed length: 7"	

Hydrostatic Drive System – Wheel Motors

27-500	Exmark 1-523328 Exmark 103-6988 Parker TF0240US081AADD	**Wheel Motor** Replaces Parker wheel motor Fits models LAZER Z & LAZER Z HP serial 440,000 to 509,999	
27-501	Exmark 1-603718 Parker TE0230FS250AAFA Parker TE0230FS250AADD	**Wheel Motor** Replaces Parker wheel motor Fits models TURF TRACER, TRACER XP, & VIKING	
27-503	Parker TE0230US250AA Encore 453068	**Wheel Motor** Replaces Parker wheel motor. Fits Encore walk-behinds, Encore Prowler Front Cut, Toro, & Husqvarna	

D

OREGON	Replaces	Description	Product Code

Hydrostatic Drive System – Wheel Motors

27-502
Parker TF0240LS080AAFB
Scag 482639
Scag 481529

Wheel Motor
Replaces Parker wheel motor
Fits Wildcat, Turf Tiger, & Tiger Cub

27-504
Hydro-Gear HGM-15E-3138
Scag 483190
Hustler 600922
Ferris 5100407

Wheel Motor
Replaces Hydro-Gear wheel motor
Fits Scag Tiger Cub, Turf Tiger, Wildcat, & Z Cat,
Ferris IS1500ZX & IS200Z (15IN3/REV – LH), & Hustler

Steel Plate Sprocket

OREGON	Teeth	Chain Size	Description	Product Code
48-051	54	#41	For use on go-karts OD: 8-7/8"	
48-048	60	#35	2" center hold with 8 bolt holes OD: 7-3/8"	
48-049	72	#35	2" center hold with 8 bolt holes OD: 8-3/4", four-bolt pattern with 2" & 2-1/2" c-c	

Sprocket Idlers

OREGON	Teeth	Chain Size	Chain Bore	OD	Product Code
34-810	10	#40, 41	3/8"	1-7/8"	

Gears

51-225
Honda 42661-VE2-800

Pinion Gear – 12-Tooth
Fits HRB215SXA, 215HXA, 215SDA, 216HXA, 216TDA, 216TXA, 217HXA, 217TDA, HRM215SXA, 215SDA, 215HXA, HRR216SDA, 216TDA, 216TKA, 216VKA, 216VYA, HRS216SDA, 216SKA, HRT216SDA, & 216TDA models

51-013
Toro 39-9160

Pinion Gear – 15-Tooth
For 21" commercial self-propelled mowers, also fits 21" rear drive residential mowers

D

Drive Parts

OREGON	Replaces	Description	Product Code

Drive Rachet Holder

51-223	Honda 23510-VB5-803 Honda 23510-VB5-801	**Right-Hand Rachet Holder** Fits HR194, 195SXA, 214SMA, 214SXA, 215HMA, 215HAX, 215SXA, 216SXA, HRA214SAX, 215SXA, 216SXA, HRC215SDA, 215SXA, 216HXA, & 216SXA models	
51-224	Honda 23520-VB5-803 Honda 23520-VB5-801	**Left-Hand Rachet Holder** Fits HR194, 195SXA, 214SMA, 214SXA, 215HMA, 215HAX, 215SXA, 216SXA, HRA214SAX, 215SXA, 216SXA, HRC215SDA, 215SXA, 216HXA, & 216SXA models	

Brake Pad

76-110	Tecumseh 799021	**Brake Pad**	

Drive Discs

76-067-0	Ariens 3003 Bolens 1720859 Case 2289 Gilson 32222 Gilson 18915 Jacobsen 158458 John Deere AM122115 Lawn Boy 741316 Snapper 1-0765 Troy-Bilt 1720859	**Drive Disc** For Snapper rear engine riders, large frame snow throwers, tractor with standard drive, rear tine tillers (RTS, RTB) OD: 6", ID: 5-3/8"	
76-002		**Brake Lining** Use with Oregon® 76-067 drive disc For smooth clutch model Snappers Length : 16-3/8", width: 3/4", height: 1/8" Non-asbestos	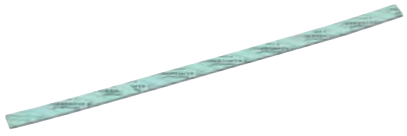
76-014	Snapper 5-3103/5-7423	**Drive Disc Kit with Drive Liner** Contains Oregon 76-067 (1) & 76-002 (1)	
76-070-0	Ariens 22013 John Deere AM12355 Noma 53830 Noma 1325 Noma 9005383 Noma 313883	**Drive Disc** For self-propelled mowers Fits Ariens 911000 series, Noma 30, 23, & 25 snow throwers OD: 4.4", rim ID: 3.715", mounting holes: .268"	
76-073-0	MTD 05080A	**Friction Wheel** Fits snow thrower models 550, 586, 440, 450, 552, 588, 840, 850, 960, & 852 OD: 6"	

D

OREGON	Replaces	Description	Product Code

Drive Ring

51-001-0	Snapper 1-0927 Snapper 2-3364	**Drive Ring – Rubber** For self-propelled mowers, all 21P series	
76-075	MTD 935-0243B	**Drive Ring – Rubber** Fits self-propelled snow throwers (1992–2005) OD: 5", ID: 4", width: 1/2"	
76-076	Husqvarna 532179831	**Drive Ring – Rubber** Fits many snow throwers (2002 & newer) OD: 4-1/2", ID: 3-3/4", width: 1/2"	

Straight Keys

OREGON	Size	Length	Product Code
80-036	3/16" sq.	12"	
80-014	1/4" sq.	12"	
80-037	3/16" sq. x 3/4" L	3/4"	

Snapper Drive Parts

51-000	5-7444 5-3225	**Disc Assembly Kit** For self-propelled mowers Complete drive assembly Use with Oregon® 45-000 or 45-010 bearing & Oregon 51-001 drive ring	
51-011	6-1276 5-1616 5-1460	**Hub, Ring and Plastic Bushing** Use with Oregon 51-001 drive ring	
51-222	6-0710 61275	**Disc Drive Assembly** Assembly includes bushings for 21" self-propelled walk-behind Use with Oregon 51-101 & 51-102 Plate Dia.: 4-3/4", pulley dia.: 3"	
45-110	1-1024	**Oil Filter Plug** For transmissions on riders & tractors	

D

Drive Parts

OREGON	Replaces	Description	Product Code

Snapper Drive Parts

41-005	2-3744 2-1745	**Hex Shaft** Fits 21" self-propelled walk-behind Hex L: 6-3/4", overall length: 8-1/4", hex: 1/2", thread: 3/8"-24	
80-745	1-1035	**Hub Bolt** For left-hand side, tapered head, rear hubs on rear engine rider Use with Oregon® 76-006 Length: 1-5/8", thread: 5/16"-24	
49-018	1-4523	**Thrust Washer** Use between disc and plate on smooth clutch assembly series 6 and up	

Lubricant and Grease

49-010	1-1050	**"00" Grease** 9 oz. bottle 12 tubes per case	
49-015		**"0" Grease** 4-1/2" oz. tube 12 tubes per case	

Brake Disc

44-364	MTD 09322	**Spindle Brake Disc** Fits models series 600, 805, 800, 739, & 750-769 For drive pulley on 38" and 42" models	

D

OREGON	Replaces	Description	Product Code

Relay Switches

33-317-0	AYP 109748 Husqvarna 532109748 Gravely 040216 Ariens 03042800	**Relay Switch** For many riders including Great Dane, John Deere, Encore, & Grasshopper	
33-318-0	Helga ID 93180 01	**Relay Switch** Fits Husqvarna ZTH & Country Clipper zero turn radius models	
33-319-0	Bosch 0332 209-150	**Relay Switch** Fits Husqvarna ZTH & John Deere ZTRAK models	
33-242	MTD 925-1648 MTD 725-1648	**Relay Switch** For lawn mowers & garden tractors (1992–2000)	

Solenoids

33-431		**Solenoid** 4 post with dual mounting bracket Terminal post and sleeve will accept both 1/4" and 5/16" teminal ends. External ground includes spade converters. 15% duty 200 amp capacity	
33-430		**Solenoid** 3 post with dual mounting bracket Terminal post and sleeve will accept both 1/4" and 5/16" teminal ends. Internal ground includes spade converters. 15% duty 200 amp capacity	
33-330	AMF 53716 AMF 52323 Ariens 3057700 Bolens 1751569 Noma 424285 Noma 52323 Noma 53716 Wheel Horse 111674	**Solenoid** 5/16" diameter bolts , 3 post Internal ground with screw terminal 50% duty 80 amp capacity Includes new spade converter	

E

Electrical Parts

Solenoids

OREGON	Replaces	Description	Product Code
33-334	Ariens 35510 Bolens 1752137 Bolens 1753539 Gilson 212655 Grasshopper 184251 Gravely 45071 Lawn Boy 740207 Simplicity 1700751 Snapper 1-8604 Wheel Horse 110162 AYP 146154 AYP 109946 AYP 109081X Roper 109946 Roper 109081X	**Solenoid — 4-Pole Style** 1/4-20 studs 50% duty External ground 80 amp capacity Includes new spade converter Toro 47-1910 Toro 47-1910 **NOTE:** The OEM AYP 146154 is a kit to replace both 3 post and 4 post solenoids using jumper wires. Oregon® 33-331 is the three post solenoid Oregon 33-334 is the four post solenoid	
33-331	Murray 24285 Murray 21261 Murray 424285	**Solenoid** 1/4" diameter bolts, 3 post Internal ground with screw terminal 50% duty 80 amp capacity Includes new spade converter	
33-332	Snapper 1-9544 Gravely 7277	**Solenoid** 5/16-24 studs, 3-pole style, 12 volt, grounded base	
33-336	Exmark 513075	**Solenoid** 5/16" large posts , 3/16" small posts Externally grounded	
33-335	MTD 725-1426 Snapper 1-8817	**Solenoid** 90° mount , 3 post Slide connector terminal 1/4" diameter bolt 50% duty, 80 amp capacity MTD (1990 & newer)	
33-337	MTD 725-0771	**Solenoid** 90° mounting bracket, 1/4"-20 studs Exact match for all MTD models (1985–1991)	

E

OREGON	Replaces	Description	Product Code

Voltage Regulators

33-320-0	Briggs & Stratton 295924 Delco 1118988 Jacobsen 107927 John Deere AM30078 Lauson 32089 Tecumseh 32089	**Voltage Regulator** For starter generators	
33-247	Briggs & Stratton 397809	**Voltage Regulator** For quad circuit 8, 10, 13, or 16 amp charging systems Fits series engines 252700, 253700, 280700, 281700, 404400, & 422700	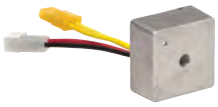
33-402	Briggs & Stratton 691185 Briggs & Stratton 394890 Briggs & Stratton 797375 Briggs & Stratton 393374	**Voltage Regulator** For 18–20 HP engines with 10, 13, 14, & 16 amp charging systems	
33-417	Briggs & Stratton 491546 Briggs & Stratton 691188 Briggs & Stratton 794360	**Voltage Regulator** For 5 & 9 amp charging systems Fits 256400, 280700, 351447, 351777, & 42A700 series engines	
33-418	Briggs & Stratton 493219	**Voltage Regulator** For 16 amp dual-output charging systems (with no charge indicator light), 8-20 HP engines Fits 303700 series engines	
33-249	Grasshopper 185530 Kubota 15531-64601	**Voltage Regulator** For equipment with permanent magnet alternators with a “no charge” indicator Fits Grasshopper models 1822D, 718D, 721D, & 721G	
33-253	John Deere M802471	**Voltage Regulator** Fits compact utility tractor models 650 & 750	
33-248	John Deere AM101406	**Voltage Regulator** Fits lawn tractor models 330, 332, & 322, skid-steer loader models 375 & 3375	

E

OREGON	Replaces	Description	Product Code

Voltage Regulators

33-246	John Deere AM126304 John Deere M70121 John Deere M97348	**Voltage Regulator** For Gator utility vehicles with 15 or 20 amp charging systems Fits lawn & garden tractor models 108, 111, 111H, 112L, 130, 160, 165, 170, 175, 180, 185, 240, 245, 260, 265, 285, 320, 325, 345, 355D, 415, 425, 455, F510, F525, F735, GT242, GT262, GT275, GX345, GX355, LX172, LX176, LX277, LX279, X475, X478, X485, X495, X575, X585, X595, X700, X720, X728, & X729, ATM models 600, 622, & 626, diesel golf equipment model 2243, material transporter models 600, 622, & 626, skid-steer loader models 375 & 3375, Greens mowers models 2500 & 2500A–E	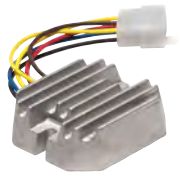
33-407	Kawasaki 21066-2056 John Deere M70121	**Voltage Regulator** Fits Kawasaki models FB460, FC400, FC420, & FC540, 13, 15, & 17 amp charging system on engines to 18 HP, John Deere models 1300, 160, 165, 170, 172, 175, 176, 180, 185, 186, 240, 242, 245, & others with 15 amp charging systems	
33-419	Kohler 12-403-01	**Voltage Regulator** Fits CV11, CV12.5, CV13, CV14, CV15, & CV18 model engines For commerical walk-behind mowers with Kohler engine, electric clutch, rope starter, and no battery	
33-400	Kohler 41-403-06 Kohler 237335 John Deere AM37200	**Voltage Regulator** For 8 thru 24 HP engines with 15 amp alternator Fits Kohler engine model K181, K241, K301, K321, K482, K532, & K582 “L” pattern with two top terminals and one bottom	
33-401	Kohler 25-755-03	**Voltage Regulator** Fits models M8 thru M20, MV16 thru MV20, CH5, CH6, CH11 thru CH15, & CV11 thru CV15 For 8 thru 24 HP engines, 15 amp alternator in-line terminals, 3 in a row	
33-411	Onan 191-1748 Onan 191-2106 Onan 191-2277	**Voltage Regulator** For 16-20 HP Onan engines Fits John Deere models 318-420 with Onan engines	

E

OREGON Replaces Description Product Code

Electric PTO Clutches — Warner to Oregon® Cross Reference

WARNER	OREGON
5215-112	33-263
5215-129	33-125-1
5215-130	33-126-1
5215-134	33-122-1
5215-14	33-114
5215-142	33-139
5215-18	33-183
5215-34	33-264
5215-35	33-265
5215-43	33-266
5215-44	33-267
5215-51	33-110
5215-53	33-116
5215-59	33-128-1

WARNER	OREGON
5215-62	33-113
5215-69	33-185
5215-88	33-118-1
5217-2	33-111
5217-32	33-133
5217-35	33-112
5217-35	33-268
5217-36	33-269
5217-43	33-133
5217-46	33-111
5217-9	33-112
5218-10	33-119-1
5218-110	33-188
5218-14	33-184

WARNER	OREGON
5218-201	33-137
5218-202	33-157
5218-205	33-153
5218-210	33-156
5218-211	33-154
5218-213	33-136
5218-215	33-137
5218-219	33-188
5218-222	33-155
5218-223	33-119-1
5218-245	33-276
5218-257	33-121
5218-26	33-121
5218-27	33-117

WARNER	OREGON
5218-271	33-277
5218-29	33-124
5218-293	33-135
5218-31	33-138
5218-33	33-189
5218-44	33-137
5218-5	33-115
5218-58	33-121
5218-65	33-136
5218-76	33-135
5218-80	33-137
5219-1	33-270
5219-115	33-271
5219-116	33-272

WARNER	OREGON
5219-14	33-132
5219-19	33-190
5219-25	33-104
5219-32	33-273
5219-4	33-274
5219-45	33-130
5219-51	33-134
5219-64	33-134
5219-79	33-134
5219-88	33-275
5219-99	33-255

Parts for Electric PTO Clutches

33-159 Warner I-5218-251-008

Pigtail — Electrical Connector Assembly
For most Warner clutches
(no diode)

33-261 John Deere AM36066
Warner 5208-451-033

Field Coil Assembly

Electric PTO Clutches

33-130 Ariens 00191700
Gravely 00191700
Warner 5219-45

Electric PTO Clutch
Made by an OEM supplier
ID: 1"
Pulley: 6"
For 5/8" belt

33-117 Ariens 00554300
Ariens 00574100
Case C375569
Grasshopper 388762
Grasshopper 604180
Woods 70903
Woods 73113
Warner 5218-27

Electric PTO Clutch
Made by an OEM supplier
ID: 1"
Double pulley: 4-7/8"
For 1/2" belt

33-118-1 Ariens 03450500
Dixie Chopper 50300
Snapper 7-9197
Snapper 7-9446
Toro 116277
Warner 5215-88

Electric PTO Clutch
Made by an OEM supplier
ID: 1"
Pulley: 5-1/4"
For 5/8" belt

Clutches are engineered for specific applications. Using a clutch not listed for an application may result in premature failure and not be covered under warranty.

E

Electrical Parts

OREGON	Replaces	Description	Product Code	

Electric PTO Clutches

33-119-1	Ariens 09225400 Gravely E-6247 Country Clipper E-6247 Dixon 61516 Toro 94-6136 Warner 5218-10 Warner 5218-223	**Electric PTO Clutch** Made by an OEM supplier ID: 1-1/8" Pulley: 5-1/4" For 5/8" belt	
33-120	Ariens 09232700 Gravely 09232700 Great Dane GDA10122 Wood Mizer P604 Warner 5218-31	**Electric PTO Clutch** Made by an OEM supplier ID: 1-1/8" Pulley: 6" For 5/8" Belt Replaced by Oregon® 33-138	
33-121	Ariens 00574200 Ariens 09407700 Grasshopper 388767 Grasshopper 606242 Snapper 3-5520 Snapper 5-8925 Woods 73558 Warner 5218-26	**Electric PTO Clutch** Made by an OEM supplier Shaft ID: 1-1/8" Double pulley: 4-7/8" For 1/2" belt Warner 5218-58 Warner 5218-257	
33-122-1	AYP 174367 Warner 5215-134	**Electric PTO Clutch** Made by an OEM supplier ID: 1" Pulley: 6" For 5/8" belt	
33-114	AYP 109550X Bobcat 188018 Exmark 543259 Ferris 1521083 Husqvarna 917063 Snapper 1-7063 Warner 5215-14	**Electric PTO Clutch** Made by an OEM supplier ID: 1" Pulley: 6" For 5/8" belt	
33-110	AYP 142600 AYP 137140 AYP 108218X Warner 5215-51	**Electric PTO Clutch** Made by an OEM supplier Keyed hub ID: 1" Pulley diameter: 5.304" For 5/8" belt	
33-112	AYP 160889 Ariens 03643100 Troy Built 1772388 Husqvarna 532160899 John Deere AM119683 Snapper 5-3740 Woods 03643100 Warner 5217-9	**Electric PTO Clutch** Made by an OEM supplier ID: 1" Pulley diameter: 5.375" For 5/8" belt	

Clutches are engineered for specific applications. Using a clutch not listed for an application may result in premature failure and not be covered under warranty.

OREGON	Replaces	Description	Product Code	

Electric PTO Clutches

33-111	AYP 145028 Ariens 36018 Simplicity 1708536 Warner 5217-2 Warner 5217-46	**Electric PTO clutch** Made by an OEM supplier ID: 1" Pulley diameter: 5.375" For 5/8" belt	
33-132	Bunton/Bobcat 2722016 Warner 5219-14	**Electric PTO Clutch** Made by an OEM supplier ID: 1-1/8" Pulley: 6" For 5/8" belt	
33-183	Bobcat 1226167 Bobcat 1226028 Warner 5215-18	**Electric PTO Clutch** Made by an OEM supplier ID: 1" Pulley: 6" For 5/8" belt	
33-116	Cub Cadet 138412 Murray 326108 Warner 5215-53	**Electric PTO Clutch** Made by an OEM supplier ID: 1" Pulley: 5-1/4" For 5/8" belt	
33-104	Cub Cadet 917-17774B Warner 5219-25	**Electric PTO Clutch** Made by an OEM supplier ID: 1" Pulley: 5-5/16" For 5/8" belt	
33-110	Cub Cadet 917-1434 Cub Cadet 917-0949 Cub Cadet 717-1434 Cub Cadet 717-0949 MTD 917-1434 MTD 917-0949 MTD 717-1434 MTD 717-0949 Warner 5215-51	**Electric PTO Clutch** Made by an OEM supplier ID keyed hub: 1" Pulley diameter: 5.304" For 5/8" belt	
33-112	Cub Cadet 917-1459 Cub Cadet 717-1459 MTD 917-1459 MTD 917-1459 Warner 5217-9 Warner 5217-35	**Electric PTO Clutch** Made by an OEM supplier ID: 1" Pulley diameter: 5.375" For 5/8" belt	

Electrical Parts

Electric PTO Clutches

OREGON	Replaces	Description	Product Code	
33-124	Cub Cadet 717-3446 Cub Cadet 917-3446 Warner 5218-29	**Electric PTO Clutch** Made by an OEM supplier ID: 1" Pulley: 6" For 5/8" belt		
33-125-1	Cub Cadet 917-1708 Cub Cadet 717-1708 MTD 717-1708 MTD 917-1708 Warner 5215-129	**Electric PTO Clutch** Made by an OEM supplier ID: 1" Pulley: 5-1/4" For 5/8" belt		
33-126-1	Cub Cadet 917-1709 Cub Cadet 717-1709 MTD 717-1709 MTD 917-1709 Warner 5215-130	**Electric PTO Clutch** Made by an OEM supplier ID: 1" Pulley: 5-1/4" For 5/8" belt		
33-139	Cub Cadet 917-04080 Cub Cadet 717-04080 MTD 717-04080 MTD 917-04080 Warner 5215-142	**Electric PTO Clutch** Made by an OEM supplier ID: 1" Pulley: 6" For 5/8" belt		
33-133	Cub Cadet 717-04163 Warner 5217-32 Warner 5217-43	**Electric PTO Clutch** Made by an OEM supplier ID: 1" Pulley: 6" For 5/8" belt		
33-134	Cub Cadet 717-04174 Cub Cadet 917-04174A Cub Cadet 917-04174 Cub Cadet 717-04174A MTD 917-04174A MTD 917-04174 MTD 717-04174A MTD 717-04174 Warner 5219-51 Warner 5219-64 Warner 5219-79	**Electric PTO Clutch** Made by an OEM supplier ID: 1" Pulley: 6" For 5/8" belt		
33-255	Cub Cadet 917-04622 Cub Cadet 717-04183 MTD 917-04622 MTD 717-04183 Warner 5219-99	**Electric PTO Clutch** Made by an OEM supplier ID: 1" Pulley: 5-5/8" For 5/8" belt		

Clutches are engineered for specific applications. Using a clutch not listed for an application may result in premature failure and not be covered under warranty.

E

Electric PTO Clutches

OREGON	Replaces	Description	Product Code
33-184	Cub Cadet 01002108P Warner 5218-14	**Electric PTO Clutch** Made by an OEM supplier ID: 1" Pulley: 6" For 5/8" belt	
33-185	Cub Cadet 917-3390 Encore 523025 Warner 5215-69	**Electric PTO Clutch** Made by an OEM supplier ID: 1-1/8" Pulley: 6" For 5/8" belt	
33-127	Encore 523370 Warner 5218-17	**Electric PTO Clutch** Made by an OEM supplier ID: 1-1/8" Pulley: 6" For 5/8" belt	
33-135	Exmark 103-0662 Warner 5218-76 Warner 5218-293	**Electric PTO Clutch** Made by an OEM supplier ID: 1" Pulley: 6-3/8" For 5/8" belt	
33-136	Exmark 103-0665 Exmark 164-1300 Warner 5218-65 Warner 5281-213	**Electric PTO Clutch** Made by an OEM supplier ID: 1-1/8"	
33-137	Exmark 103-0690 Exmark 103-960 Exmark 109-2916 Exmark 109-9276 Exmark 1-653048 Warner 5218-44 Warner 5218-80 Warner 5218-215 Warner 5218-201	**Electric PTO Clutch** Made by an OEM supplier ID: 1" Pulley: 7-3/8" For 5/8" belt	
33-153	Exmark 109-9276 Warner 5218-205	**Electric PTO Clutch** Fits Lazer Z HP s/n 720,000 and up (except 27 HP) ID: 1" Pulley diameter: 7-1/8" For 5/8" belt	

Electrical Parts

OREGON	Replaces	Description	Product Code	
Electric PTO Clutches				
33-156	Exmark 109-9275 Warner 5218-210	**Electric PTO Clutch** Fits Lazer Z HP 27 HP serial numbers 720,000 and up ID: 1-1/8" Pulley diameter: 7-1/4" For 5/8" belt		
33-157	Exmark 103-6579 Warner 5218-202	**Electric PTO Clutch** Fits Lazer Z air cooled serial 720,000 and up, Lazer Z AS serial 720,000-789, & 999 ID: 1-1/8" Pulley diameter: 7-3/8" For 5/8" belt		
33-187	Exmark 1653048 Exmark 103-0960 Warner 5218-44 Warner 5218-201	**Electric PTO Clutch** Made by an OEM supplier ID: 1" Pulley: 7-3/8" For 5/8" belt		
33-115	Exmark 633099 Bobcat 2188151 Ferris 1522040 Husqvarna 102603 Kees 102603 Warner 5218-5	**Electric PTO Clutch** Made by an OEM supplier ID: 1-1/8" Pulley: 6" For 5/8" belt		
33-138	Gravely 9266700 Gravely 09232700 Great Dane GDA10122 Wood Mizer P604 Woods 73559 Warner 5218-94 Warner 5218-31	**Electric PTO Clutch** Made by an OEM supplier ID: 1-1/8" Pulley: 6" For 5/8" belt Heavy-duty version of Oregon® 33-120		
33-155	Hustler 601311 Warner 5218-222	**Electric PTO Clutch** Component of kit 787366 Fits Hustler Z, Hustler Z XR7, Hustler Mini Z, Hustler ATZ, Hustler Super Z, Hustler Super Z XR7, Hustler Mini Z, & Hustler Super Mini Z ID: 1-1/8" Pulley diameter: 6-5/16" For 5/8" belt		
33-188	Hustler 781039 Warner 5218-110 Warner 5218-219	**Electric PTO Clutch** Made by an OEM supplier ID: 1-1/8" Pulley: 6-1/4" For 5/8" belt		

Clutches are engineered for specific applications. Using a clutch not listed for an application may result in premature failure and not be covered under warranty.

E

Electric PTO Clutches

OREGON	Replaces	Description	Product Code

33-263
John Deere AM123038
Warner 5215-112

Electric PTO Clutch
Fits models LX172, LX173, LX176, LX178, LX186, & LX188
ID: 1
Pulley diameter: 5-3/8
For 1/2" belt

33-264
John Deere AM123123
Warner 5215-34

Electric PTO Clutch
Fits models LX172, LX173, LX176, LX178, LX186, LX188,GS25, GS30, GS45, GS75,HD45, HD75, 180, & 185
ID: 1-1/8
Pulley diameter: 5-3/8
For 1/2" belt

33-265
John Deere AM122969
Warner 5215-35

Electric PTO Clutch
Fits models 108, 111, 112L, 170, STX30, STX38, LX172, LX173, LX176, LX178, LX186, LX188, G15, GS25, GS30, GS45, GS75, HD45, & HD75
ID: 1
Pulley diameter: 5-3/8
For 1/2" belt

33-266
John Deere AM105302
Warner 5215-43

Electric PTO Clutch
Fits models F710 & F725
ID: 1-1/8
Pulley diameter: 4-5/16 (double)
For 1/2" belt

33-267
John Deere AM119536
Warner 5215-44

Electric PTO Clutch
Fits models 240, 245, 260, 265, 285, 320, 325, 335, 345, GT242, GT262, & GT275, SABRE 2554HV & 2254HV, & Scotts S2554
ID: 1-1/8
Pulley diameter: 5-3/8
For 1/2" belt

33-269
John Deere AM121972
Warner 5217-36

Electric PTO Clutch
Fits models STX38 & STX46
ID: 1
Pulley diameter: 5-1/4
For 1/2" belt

33-270
John Deere AM126100
Warner 5219-1

Electric PTO Clutch
Fits models GT225, GT235, GT245, GX255, LT190, LX255,LX266,LX277, LX279, LX280, LX288, LX289, SST16, & SST18
ID: 1
Pulley diameter: 5
For 1/2" belt

33-271
John Deere AM138234
Warner 5219-115

Electric PTO Clutch
Fits models Z225 EZTrak
ID: 1
Pulley diameter: 5-5/8
For 1/2" belt

E

Electrical Parts

OREGON	Replaces	Description	Product Code

Electric PTO Clutches

33-272	John Deere AM138729 Warner 5219-116	**Electric PTO Clutch** Fits models Z245 EZTrak ID: 1 Pulley diameter: 6-1/8 For 1/2" belt	
33-273	John Deere TCA14535 Warner 5219-32	**Electric PTO Clutch** Fits models 717 Mini-Frame Ztrak & 727 Mini-Frame ZTrak ID: 1-1/8 Pulley diameter: 5-1/4 For 5/8" belt	
33-274	John Deere GDA10017 Warner 5219-4	**Electric PTO Clutch** Fits models 717 Mini-Frame ZTrak, 727 Mini-Frame ZTrak, 647 Quik-Trak, 657 Quik-Trak, & 667 Quik-Trak ID: 1 Pulley diameter: 5-3/4 For 5/8" belt	
33-275	John Deere AM136787 Warner 5219-88	**Electric PTO Clutch** Fits models Z225 EZTrak Residential, Z425 EZTrak Residential, Z445 EZTrak Residential, & EZTrak Residential ID: 1 Pulley diameter: 5-1/2 For 5/8" belt	
33-276	John Deere TCA19813 Warner 5218-245	**Electric PTO Clutch** Fits models Z720A ZTrak, Z520A Estate ZTrak, Z810A Pro ZTrak, Z820A Pro ZTrak, Z910A Pro ZTrak, & Z920A Pro ZTrak ID: 1-1/8 Pulley diameter: 6-5/8 For 5/8" belt	
33-277	John Deere TCA21167 Warner 5218-271	**Electric PTO Clutch** Fits models Z910A ZTrak, Z920A ZTrak, Z910A Pro ZTrak, Z920A Pro ZTrak, & Z925A Pro ZTrak ID: 1-1/8 Pulley diameter: 6-5/8 For 5/8" belt	
33-113	Toro 93-3160 Ariens 30908 Cub Cadet WD-C38410 Warner 5215-62	**Electric PTO Clutch** Made by an OEM supplier ID: 1-1/8" Double pulley: 5" For 1/2" belt	
33-189	Toro 94-4632 Toro 105-1671 Warner 5218-33	**Electric PTO Clutch** Made by an OEM supplier ID: 1-1/8" Double pulley: 4-7/8" For 1/2" belts	

OREGON	Replaces	Description	Product Code	

Electric PTO Clutches

33-128-1	Toro 99-8012 Jacobsen 990947 Warner 5215-59	**Electric PTO Clutch** Made by an OEM supplier ID: 1" Pulley: 5-1/4" For 5/8" belt	
33-190	Wright Stander 71410006 Warner 5219-19	**Electric PTO Clutch** Made by an OEM supplier ID: 1" Pulley: 6" For 5/8" belt	
33-154	Wright 71410001 Warner 5218-211	**Electric PTO Clutch** Fits large frame Standers up to serial number 49704 ID: 1" Pulley diameter: 6-5/16" For 5/8" belt	

Diodes

33-414	Briggs & Stratton 393456	**Diode & Pigtail** For 2-4 amp dual circuit alternators Fits models 197400 & 280700 series	
33-415	Briggs & Stratton 393814	**Diode Assembly** For 2-4 amp charging systems Fits 176450, 176432, & 280700 series	
33-420	Tecumseh 611161	**Diode** For charging system	

E

Can't find what you're looking for?

Try us online to search the latest products available.

OregonProducts.com

Electrical Parts

Primary Wire

OREGON	Length	Color	Product Code
42-080	100'	Red	
42-081	100'	Black	

16 gauge wire

Cable Ties

02-017

Cable Ties
50-pack of Oregon® 02-000 nylon tie
Cable tie length: 8"

Fuses

OREGON	Type	Size	Product Code
33-031	ATO	10 amp	
33-032	ATO	15 amp	
33-033	ATO	20 amp	
33-034	ATO	25 amp	
33-035	ATO	30 amp	

• 16 gauge wire

Fuse Holders - Heavy-Duty

OREGON	Description	Product Code

33-038

Fuse Holder
For ATO style fuses up to 30 amp, 12 AWG wire
Fits Oregon 33-030 thru 33-035
Complete with 20 amp fuse

33-070

Fuse Holder
For glass fuses up to 20 amp, twist and lock style holder
Fits Oregon 33-064
Complete with 20 amp fuse

E

Electrical Terminal & Connector Assortment

OREGON	Qty.	Description	Product Code
08-152	170	Electrical Terminals & Connectors Standard refill qty. 10	
Components			
	10	Scotch Tab Connector - Blue	
	10	Eye Terminal #6 Screw - Blue	
	10	Eye Terminal #10 Screw - Blue	
33-307	10	Eye Terminal 1/4" Screw - Blue	
	20	Spade Terminal #10 Screw - Blue	
	10	Electrical Terminal - Hook Style	
33-312	20	2-Wire Butt Connector - Red	
33-313	20	2-Wire Butt Connector - Blue	
33-301	10	Slide Connector - Female - Blue	
33-302	10	Slide Connector - Male - Blue	
	20	2 Wire Butt Connector - Yellow	
	10	Spade Terminal #6 Screw - Red	
	10	Hook Terminal #6 Screw - Blue	

Lead Battery Terminal

OREGON	Description	Product Code
47-689	**Two Screw Emergency Terminal** Heavy lead, fits all battery cables For 6 thru 2 gauge cable	

Terminal Insulators

47-020	**Terminal Insulator** Medium

Battery Cable Lugs

47-014	**Battery Cable Lug – 1/4"**
47-038	**Battery Cable Lug – 3/8"** Open conductive lugs For 6 to 2 gauge cable Use with Oregon® 47-050 & 47-051

Battery Tender Charger

33-502	**Battery Charger** Battery Tender Junior Charges all 12-volt batteries, safely charges sealed batteries in walk-behind mowers as well as wet 12-volt batteries 12V at 750mA, 2-step charging, fully automatic switching from charge to float, 5-year warranty Can be used to charge Oregon 33-500-0

Electrical Parts

OREGON	Replaces	Description	Product Code

Battery Cables

OREGON	Length	Color	Lug Hole Dia/	Product Code
47-080	8"	Black	3/8" x 3/8"	
47-120	12"	Black	3/8" x 3/8"	
47-160	16"	Black	3/8" x 3/8	
47-200	20"	Black	3/8" x 3/8"	
47-081	8"	Red	3/8" x 3/8"	
47-121	12"	Red	1/4" x 3/8"	
47-161	16"	Red	1/4" x 3/8"	
47-201	20"	Red	1/4" x 3/8"	

- Poly-vinyl insulation
- 6-gauge cable

47-050	50'	Black
47-051	50'	Red

6-gauge battery cable with poly-vinyl insulation

Batteries & Accessories

33-500-0 Toro 55-7520, Lawn Boy 684708, Lawn Boy 683637

Battery
For all Toro walk-behind mowers with electric start & newer style "S" series Lawn Boy mowers

42-005

Battery Terminal Protector Spray
10 oz. spray can
Fights battery corrosion
Prolongs battery life

42-007

Battery Cleaner Spray
16 oz. spray can
Penetrates, loosens and neutralizes all acid corrosion deposits
Assures maximum current flow

42-001

Battery Hydrometer
Heavy-duty shop version
Measures cell specific gravity

E

Briggs & Stratton Gasket Sets

OREGON	Replaces	Description	Product Code
49-412	393411	**Complete Gasket Set with Seals** Fits 220700, 252700, 253700, 254700, 255700, 256700, 257700, 258700, & 259700 series engines For 11 and 12 HP vertical engines	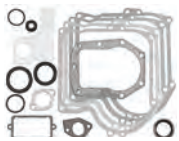
50-408	699933 298989	**Complete Gasket Set with Seals** Fits 92500 & 92900 engines For 3 and 3.5 HP vertical engines	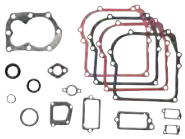
50-409	299577	**Complete Gasket Set with Seals** Fits 170400, 170700, 190400, 195400, 190700, 191700, 192700, & 193700 series For 7 & 8 HP engines	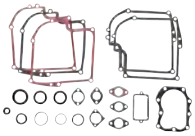
50-410	495603 397145	**Complete Gasket Set with Seals** Fits 297615 130202, 130400, 131400, 132400 (1994 & older), 100200, 130200, 131200, & 132200 series For 5 HP horizontal engines	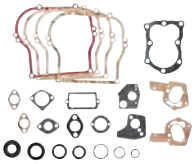
50-411	496659 297616	**Complete Gasket Set with Seals** Fits 100900, 130900, & 132900 series For 4 & 5 HP vertical engines	
50-412	494241 490525	**Complete Gasket Set with Seals** Fits models 280700, 281700, 282700, 283700, & 286700 For 12 & 12.5 HP engines	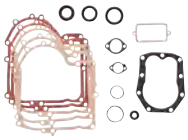
50-437	690192 494385	**Gasket Set** Fits Walbro carburetors on 21, 28, & 31 CID single cylinder OHV engines	

Briggs & Stratton Gaskets

49-129	272296 271840	**Air Cleaner Gasket**	
49-131	271139 271139S	**Air Cleaner Gasket** For 3–5 HP engines GS030-104	

E

Engine Parts

Briggs & Stratton Gaskets

OREGON	Replaces	Description	Product Code
49-069	272653 272653S 795629	**Air Cleaner Gasket** Fits 133700-133799, 135700-135799, 127700-127799, 127800-127899, & 129800-129899 series	
50-101	692218 270833	**Base Gasket** Fits 92500, 92900, 110900t, 60000, & 80000 series For 3, 3-1/2, & 4 HP vertical & 2, 3, & 4 HP horizontal engines Thickness: .015"	
49-110	692405 271996	**Base Gasket** For 12 and 12-1/2 HP engines Thickness: .009"	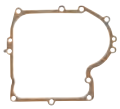
49-114	692232 272198	**Base Gasket**	
49-115	692226 271916	**Base Gasket** For 12 and 12-1/2 HP engines Thickness: .015"	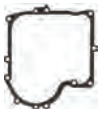
49-123	27918 394209	**Carburetor Body Gasket** Fits models 142700, 147000, 170000, 190000, 191000, & 200000	
49-355	27355 27355S	**Carburetor Mounting Gasket** Fits 80000, 100200, 130200, 131200, & 132200 series For 3, 4, & 5 HP horizontal engines	
49-095	490522 273113S 273113 271936	**Carburetor Mounting Gasket** Fits 80200, 91200, 112200, 133200, & 135200 series	
49-119	272554 272554S 270824	**Carburetor Mounting Gasket** For 10 & 12.5 HP engines	
49-031	692236 272293 270917	**Exhaust Gasket** For 16 & 18 HP twins	
49-127	270511	**Float Bowl Gasket** For 7 & 12 HP vertical engines	

E

Briggs & Stratton Gaskets

OREGON	Replaces	Description	Product Code
49-128	692190 68477	**Fuel Bowl Gasket** Use with Oregon® 07-001	
49-161	272475S 272475	**Rocker Arm Cover Gasket** For 21 CID OHV engines	
50-435	273280S 273280 272614	**Head Gasket** Fits 21DM & 28 CID OHV vertical shaft engines	
50-438	691894 273364	**Air Cleaner Gasket** Fits 12 CID single cylinder OHV vertical engines	
49-160	27034	**Carburetor Bowl Gasket** Fits models 142000–147000, 252000, 301000, & 325000	
50-027	698717 692288 395007 272536S 272536 272170 270341	**Head Gasket** Fits 92500 & 92900 series For 3 & 3-1/2 HP engines	
50-541	272163 272163S 270430	**Head Gasket** Metal clad For 7 & 8 HP horizontal and vertical engines	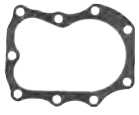
50-542	272157S 272157 270383	**Head Gasket** Metal clad For 5 HP horizontal and vertical engines	
50-544	272167 27670	**Head Gasket** Metal clad For 2 & 3 HP horizontal engines	
50-025-0	271866 271866S 271075	**Head Gasket** For 11 HP engines Grafoil	

E

Engine Parts

OREGON	Replaces	Description	Product Code	

Briggs & Stratton Gaskets

50-545	271867 271867S 270984	**Head Gasket** For 16 & 18 HP twin cylinder grafoil		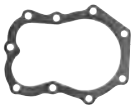
50-546	271868 271868S 270983	**Head Gasket** For 16 & 18 HP twin cylinder grafoil		
50-543	272200 272200S	**Head Gasket** Fits models 12A800, 121700, 121800, 122700, 123700, 123800, 124700, 124800, & 127500. Grafoil For Quantum 12 CID engines		
50-441	692249 272916	**Cylinder Head Gasket** For 12 CID L-head vertical shaft engines		
50-445	272694	**Head Gasket** For 9 and 10 CID L-head vertical engines before code 0411900		
50-448	698717 692288 272694	**Head Gasket** For 9 and 10 CID L-head vertical engines after code 0411800		
49-111	270345 270345S	**Intake Tube Gasket** 3 & 3-1/2 HP vertical engines		
02-644-0	270344 270344S	**O-Ring** For intake tube on 3 & 4 HP engines		
49-099	272409S 272409 271592 27911	**Tank Mounting Gasket** Fits 60000, 80000, 100200, & 130200 series		
49-067	272996 272410 271928	**Tank Mounting Gasket** Fits 132200 series – three-hole gasket		
49-109	692241 272489	**Tank Mounting Gasket** For 2–5 HP horizontal engines – four-hole gasket		
49-246	281165S	**Carburetor Bowl Gasket** Fits LMT Walbro carburetors used on 192400 model series engines		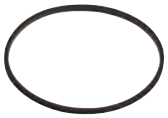

E

OREGON	Replaces	Description	Product Code

Briggs & Stratton Gaskets

49-107	27549 27549S	**Valve Cover Gasket** For 2–5 HP horizontal engines	
49-100	695890 272602S 272602 270239	**Valve Cover Gasket** Fits 92900, 110000, & 111000 series	
49-112	27803 27803S	**Valve Cover Gasket** For 7–18 HP engines	
49-132	699833 272481S 272481 271904	**Valve Cover Gasket** For Quantum and Europa engines	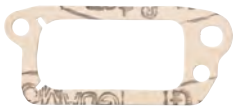

Briggs & Stratton Oil Seals

49-204	399781 399781S	**Oil Seal** Fits PTO side on models 97700, 99700, 12A800, 12D800, 121700 thru 129800, & 104700 series engines ID: 1-1/16", OD: 1-11/16"	
49-040-0	299819 299819S 89660 393862	**Oil Seal** For 3, 3-1/2, 4, & 5 HP engines, flywheel side ID: 7/8", OD: 1-1/4", thickness: 3/16"	
49-041-0	391483 391483S	**Oil Seal** For 3–4 HP vertical engines (PTO side) ID: 7/8", OD: 1-3/8", thickness: 5/16"	
49-045	391086 391086S	**Oil Seal** For mag side 10–12.5, 14, 16, & 18 HP engines, 8 HP engines, & PTO side 7–8 HP engines ID: 1-3/16", OD: 1-11/16", thickness: 1/4"	
49-047	291675 291675S	**Oil Seal** For PTO side on 11 HP engines ID: 1-3/8", OD: 1-7/8", thickness: 1/4"	
49-413	281370 281370S 68838 805259	**Oil Grommet** For oil dip stick tube	

E

Engine Parts

OREGON	Replaces	Description	Product Code

Briggs & Stratton Connecting Rods

36-100	299429 299430	**Connecting Rod** Fits model series 130200-132900 For 5 HP engines	
36-101	294367 294201	**Connecting Rod** Fits model series 80000, 90000–96900 (except two-cycle) For 3, 3.5, & 3.75 HP engines	
36-102	392939 490566	**Connecting Rod** Fits model 100700–126800 3.5–4 HP max series & 3.5–6 HP (12 CID) Quantum prior to 97011300 date code For 4 HP engines	
36-103	390401 390402	**Connecting Rod** Fits model series 190400–196700 For 8 HP engines	
36-104	391775 490348	**Connecting Rod** Fits 280700–286700, 288700, 289700, 28A700, & 28M700 For 10–15 HP horizontal & vertical engines Not for OHV models	

Briggs & Stratton Ring Sets

OREGON	OEM No	Size	Description	Product Code
36-028	498680	Std.	For 3.5 HP, thin ring	
36-027	499425	Std.	For 5 HP Quantum (after date code 97011200)	
36-022	392331	Std.	Chrome, for 10 thru 12.5 HP engines model 22, 25, & 28 series	
36-005	391780	Std.	For 10–12.5 HP engines L head cast iron bore	

Briggs & Stratton Oil Filler Plug

49-667	66768	**Oil Filler Plug**	

OREGON	Replaces	Description	Product Code	
Honda Gasket Sets				
50-414	06111-ZH7-405	**Gasket Set** Fits GX120 series engines		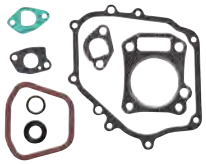
50-416	06111-ZH8-405	**Gasket Set** Fits GX160 series engines		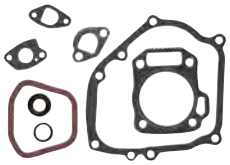
50-415	061A1-ZE1-010	**Gasket Set** Fits GX140 series engines		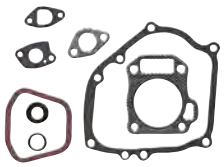
50-417	061A1-ZE2-U01 06111-ZE2-408	**Gasket Set** Fits GX240 series engines		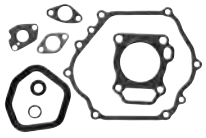
50-418	061A1-ZE3-T01 06111-ZE3-405	**Gasket Set** Fits GX340 series engines		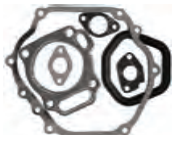
50-419	061A1-ZF6-V00 06111-ZF6-407	**Gasket Set** Fits GX390 series engines		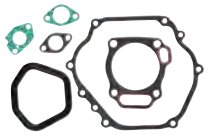
Honda Gaskets				
50-420	16212-ZL8-000	**Gasket** Fits GCV 135 & GCV 160 series engines		
50-421	16221-883-800	**Gasket** Fits GCV135 & GCV160 series engines		
50-422	16228-ZL8-000	**Gasket** Fits GCV135 & GCV160 series engines		
49-186	16220-ZE6-010	**Air Cleaner Gasket** Fits GXV120 & GXV160 series engines		

E

Engine Parts

Honda Gaskets

OREGON	Replaces	Description	Product Code
49-185	16220-ZE1-020	**Air Cleaner Gasket** Fits GX160 series engines	
49-184	16220-ZAO-702	**Air Cleaner Gasket** Fits GX240, GX340, & GX390 series engines	
49-182	16212-ZG9-J60	**Carburetor Insulator Gasket** Fits GXV120 series engines	
49-181	16212-ZE7-M10	**Carburetor Insulator Gasket** Fits GXV160 series engines	
49-183	16212-ZH8-800	**Carburetor Insulator Gasket** Fits GX160 series engines	
49-190	16221-ZH8-801	**Carburetor Gasket** Fits GX160 series engines	
49-191	16223-ZAO-800	**Carburetor Insulator Gasket** Fits GXV240 series engines	
49-187	16221-ZAO-800	**Carburetor Gasket** Fits GX240 series engines	
49-192	16223-ZE3-W00	**Carburetor Insulator Gasket** Fits GX340 & GX390 series engines	
49-189	16221-ZF6-800	**Carburetor Gasket** Fits GX340 & GX390 series engines	
49-324	16221-Z0H-000	**Carburetor Gasket** Fits GX25 engines	
49-143	18381-ZL8-305	**Exhaust Gasket** Fits GCV135 & GCV160 series engines	
50-428	12251-ZE6-000	**Head Gasket** Fits GXV120 series engines 5 HP	
50-553	12251-ZE2-800 12251-ZE2-000	**Head Gasket** Fits GX240 series engines 8 HP	

E

OREGON	Replaces	Description	Product Code

Honda Gaskets

50-555	12251-ZF6-W00	**Head Gasket** Fits GX390 series engines	
50-554	12251-ZE3-800 12251-ZE3-W00	**Head Gasket** Fits GX340 series engines 10 HP	
50-556	12251-ZF1-000 12251-ZE1-800	**Head Gasket** Fits GX160 series engines 5.5 HP	
50-450	11381-ZH8-801	**Sump Cover Gasket** Fits GX160 series engines	
50-452	11381-ZE2-800	**Sump Cover Gasket** Fits GX240 series engines	
50-455	11381-ZE3-001	**Sump Cover Gasket** Fits GX340 & GX390 series engines	
50-433	12391-ZE7-M10 12391-ZE7-T00	**Valve Cover Gasket** Fits GXV120 & GXV160 series engines	
50-432	12391-ZE1-000	**Valve Cover Gasket** Fits GX160 series engines	
50-431	12391-ZE2-020	**Valve Cover Gasket** Fits GX240, GX340, & GX390 series engines	
50-423	18381-ZE2-W10	**Muffler Gasket** Fits GX240, GX340, & GX390 series engines	
50-425	18381-ZH6-800	**Muffler Gasket** Fits GX160 series engines	
50-426	18333-ZK6-Y00	**Muffler Pipe Gasket** Fits GX240, GX340, & GX390 series engines	

E

Engine Parts

OREGON	Replaces	Description	Product Code

Honda Carburetor Insulators

49-233	Honda 16211-ZE1-000	**Carburetor Insulator** Fits GX140 & GX160	
49-234	Honda 16211-ZE2-000	**Carburetor Insulator** Fits GX240 & GX270	
49-236	Honda 16211-ZE2-W00	**Carburetor Insulator** Fits GX340 & GX390	

Honda Pistons

36-243	13101-ZF7-010	**Piston Standard** Fits GXV160 series engines, 5.5 HP. Use Oregon® 36-043 rings	
36-244	13101-ZE2-W00 13101-ZE2-010	**Piston Standard** Fits GX240 series engines, 8 HP. Use Oregon 36-044 rings	
36-245	13101-ZE3-W00	**Piston Standard** Fits GX340 series engines, 10 HP. Use Oregon 36-045 rings	
36-246	13101-ZF6-W00	**Piston Standard** Fits GX390 series engines. Use Oregon 36-046 rings	

Honda Ring Sets

36-041	13010-ZE6-013	**Ring Set Standard Bore** Fits GX120 series engines, 4 HP	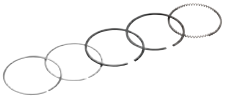
36-042	13010-ZE1-013	**Ring Set Standard Bore** Fits GX140 series engines, 5 HP	
36-043	13010-ZF1-023	**Ring Set Standard Bore** Fits GX160 series engines, 5.5 HP	
36-044	13010-ZE2-013	**Ring Set Standard Bore** Fits GX240 series engines, 8 HP	
36-045	13010-ZE3-003	**Ring Set Standard Bore** Fits GX340 series engines, 10 HP	
36-046	13010-ZF6-003	**Ring Set Standard Bore** Fits GX390 series engines	

Honda Connecting Rods

OREGON	OEM No	Description	Product Code
36-140	13200-ZE0-000	Connecting Rod Standard For GX110 & GX120 series engines	
36-141	13200-ZE1-010 13200-ZE1-000	Connecting Rod Standard For GX140 & GX160 series engines	
36-142	13200-ZE2-010 13200-ZE2-000	Connecting Rod Standard For GX240 & GX270 series engines	
36-143	13200-ZE3-020 13200-ZE3-010	Connecting Rod Standard For GX340 & GX390 series engines	

Honda Valves

OREGON	OEM No	Valve Type	Fits Model	Product Code
36-524	14711-Z0J-000 14711-ZL8-000	Intake	Fits GCV120 & GCV160 engines	
36-521	14711-ZF1-000	Intake	Fits GX160 engines	
36-522	14721-ZF1-000	Exhaust	Fits GX160 engines	
36-523	14711-ZE2-000	Intake	Fits GX240 & GX270 engines	
36-325	14711-ZE3-000	Intake	Fits GX340 engines	
36-326	14721-ZE3-000	Exhaust	Fits GX340 engines	

Honda Long Heads

OREGON	Description	Product Code
36-530	Long Head for GX160 includes: head, head gasket, valves, valve springs, keepers, rocker arms, rocker arm cover gasket, intake studs, intake gasket, & exhaust gasket	
36-531	Long Head for GX340/GX390 includes: head, head gasket, valves, valve springs, keepers, rocker arms, rocker arm cover gasket, intake studs, intake gasket, & exhaust gasket	
36-535	Long Head for GX240/GX270 includes: rocker arms, rocker arm cover gasket, intake studs, & intake gasket	

Honda Oil Seals

OREGON	Replaces	Description	Product Code
49-194	91252-888-003	**Oil Seal** Fits GXV120 & GXV160 series engines	
49-206	91201-889-003	**Oil Seal** Fits GX240 & GX300 series engines	

E

Engine Parts

OREGON	Replaces	Description	Product Code

Honda Oil Seals

49-193	91201-890-003	**Oil Seal** Fits GX240 series engines	
49-207	91201-ZE3-004	**Oil Seal** Fits GX340 series engines	
49-208	91202-883-005	**Oil Seal** Fits GX160 series engines pistons for Honda	

Honda Oil Gauge, Dip Stick, & Oil Caps

49-196	15600-ZE1-003 15600-ZE1-000	**Oil Cap with Indicator** Fits GX110, GX120, GX140, GX160, & GX200 series engines	
50-454	15600-ZG4-003	**Oil Cap** Fits GX100, GX120, GX160, GX200, GX240, GX270, GX340, GX390, & GX440 series engines	
50-453	15600-735-003	**Oil Cap with Indicator** Fits GX240, GX270, GX340, & GX390 series engines	

Lawn Boy Gaskets

50-502	602850	**Carburetor Bowl Gasket** For F series engines, 2-3/4" x 2-1/4"	

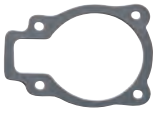

E

Can't find what you're looking for?
Try us online to search the latest products available.

OregonProducts.com

OREGON	Replaces	Description	Product Code

Kohler Gaskets

50-043	52-052-03 52-041-18 52-041-20 52-041-50S 52-052-04	**Head Gasket** Fits KT17, KT19, KT21, M18, & M20 Magnums For 17, 19, & 21 HP twin cylinder	
50-041	47-041-15 47-041-15S 47-041-10	**Head Gasket** For 10, 12, & 14 HP engines	
49-603	17 755 06-S	**Gasket Set** - NEW Fits CH260 & CH270	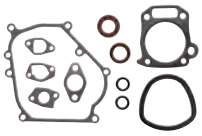
49-604	17 755 44-S	**Gasket Set** - NEW Fits CH440	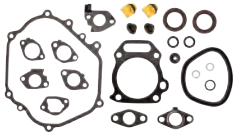
49-605	17 755 43-S	**Gasket Set** - NEW Fits CH395	
49-906	24 153 30-S	**Valve Cover Gasket** - NEW Fits CH18, CH20, CH22, CH25, CH26, CH620, CH640, CH641, CH670, CH680, CH682, CH730, CH732, CH740, CH742, CH745, CH750, CH752, CV18, CV20, CV22, CV23, CV25, CV620, CV640, CV680, CV730, CV740, CV742, ECH730, ECH749, ECV740, ECV749, SV710, SV720, SV730, SV735, & SV740	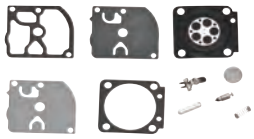
49-607	24 841 04-S	**Head Gasket Kit** - NEW Fits CH25, CH730, CH740, & CV25 For 25 HP engines	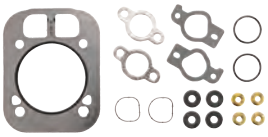

Kohler Miscellaneous Parts

36-416	24 462 07-S	Dust Ejector Valve - NEW Fits CH20, CH22, CH23, CH25, CH640, & CH670	

Poulan Gaskets (also see Weed Eater)

49-017	19156	**Carburetor Mounting Gasket** For most trimmers	

E

Engine Parts

OREGON	Replaces	Description	Product Code	

Ryan / Ryobi Gaskets

49-170	610675	**Carburetor Mounting Gasket** For all trimmers		

Tecumseh Gasket Sets

50-407	33236B 33238B	**Gasket Set** Fits LAV30, LAV35, LAV40, & LAV50 series For 3, 3.5, 4, & 5 HP vertical engines		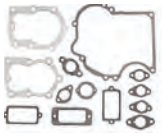
50-302	33279E 33279F	**Gasket Set** Fits VM80 & VM100 series For 8 & 10 HP vertical engines		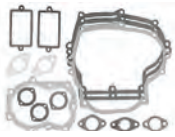

Tecumseh Gasket & Seals

49-150	27272 27272A	**Air Cleaner Mounting Gasket** For most models		
49-152	33051	**Air Cleaner Mounting Gasket** For 3–10 HP engines		
50-204	35261 26750A 37130	**Base Gasket** Fits LAV 30, 35, 40, 50, TVS, & TNT series For 3, 4, & 5 HP vertical engines		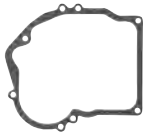
50-206	30684 29523	**Base Gasket** Fits V60, H60, H70, VH60, & VH70 series For 6 & 7 HP engines		
49-841	631028	**Bowl Gasket** Use on all bowl carbs, square cut		
49-402	26756 27141	**Carburetor Mounting Gasket** Fits LAV 30, 35, V40, 50, 60, 70, VM80, & VM100 For 3, 3-1/2, 4, 5, 6, 7, 8, & 10 HP engines		
49-403	33263 33861	**Carburetor Mounting Gasket** Fits V80, VM70, VM80, VM100, & HM70 For 7–10 HP engines		
49-153	26754 26754A	**Carburetor Mounting Gasket** Fits V, VA, LV, H, LAV, TNT, & TVS series		

E

Tecumseh Gasket & Seals

OREGON	Replaces	Description	Product Code
49-157	33670A	**Exhaust Gasket** Fits LAV50 & HS50 For 5 HP vertical & horizontal engines	
50-548	33554 33554A	**Head Gasket** Metal clad Fits TVS120 & HS50 5 HP engines	
50-032	28938B 28938C 27904	**Head Gasket** Fits V50, V60, & VH60 For 5 & 6 HP vertical engines	
50-033	34041 34041A 33270	**Head Gasket** Fits VM70, 80, & 100 series For 7, 8, and 10 HP engines	
49-156	34690A	**Intake Manifold Gasket** For 3–10 HP engines	
49-014	31688 31688A 29776	**Intake Manifold Gasket** For LAV, TVS, TNT, & ECV series engines, 3 thru 5 HP, thick style	
49-016	32649 32649A 30188	**Intake Gasket** For LAV, TVS, TNT, & ECV models, thick style	
49-411	27915 27915A 30226	**Manifold Gasket** Fits V50, V60, V70, VM80, & VM100 series For 5, 6, 7, & 8 HP vertical engines	
49-041-0	26208 25548	**Oil Seal** ID: 7/8", OD: 1-3/8", thickness: 5/16"	
49-120	27234 27234A 32754	**Valve Cover Gasket** Fits LAV 22-50, H22-50, HS40, & HS50 series	
49-084	27110A	**Bowl Nut Gasket** For most Tecumseh-built carburetors	

E

Engine Parts

Oil Drain Valve

45-118	Tecumseh 37651 Kohler 27-755-14S Kohler 27 755 14S	**Oil Drain Valve** Includes protective dust cap Adapts to most engines 8 HP and larger, 3/8"-18 NPTF thread Connect 1/2" ID hose-to-outlet

Universal Intake Gaskets

49-262	**Intake Gasket** For many Walbro, Tillotson, and Zama

Weed Eater Intake Gasket (also see Poulan)

49-017	19156	**Carburetor Mounting Gasket** Fits most trimmers

Gasket Assortments

OREGON	Qty.	Description	Product Code
08-010	114	Gasket/Intake – Two-Cycle Engines Standard refill qty. 10	
Components			
	10	Intake gasket for HU*	
	5	Intake gasket for HK*	
	5	Intake gasket for HK*	
	10	Intake gasket for HCA, HDA*	
	5	Intake gasket for HL*	
	5	Intake gasket for HS*	
	10	Intake gasket for WS**	
	5	Intake gasket for MDC**	
	2	Intake gasket for WZ**	
	2	Intake gasket for WZ**	
	5	Intake gasket for HL*	
	10	Intake gasket*	
	10	Intake gasket*	
49-262	10	Intake gasket	
	10	Intake gasket	
	5	Gasket Material	
	5	Intake gasket*	

* Tillotson **Walbro See the Gasket section for more informaton

Gasket Scraper

OREGON	Description	Product Code
42-446-0	**Wide Blade Gasket Scraper** For gasket removal, nickel chrome plated, “Insulite” plastic handle Length: 11"	

OREGON Description Product Code

Fuel Stabilizer

4205M **Fuel Stabilizer**
Stabilizes fuel and keeps it fresh
Previously 42-912-1
Keeps gum and varnish from developing
Use in any 2-cycle, 4-cycle, gas or diesel engine fuel systems
Promotes easy starts after storage
Convenient easy measure, easy pour bottle
8 oz. bottle, 12 per carton

Mix:
1 oz. Fuel Stabilizer to 2-1/2 gallons gasoline (entire contents of 8oz. bottle will treat 20 gallons of gasoline).

Oregon® Fuel Lines

OREGON	ID	OD	Length	Product Code
Non-compliant with EPA & CARB regulations – E40 compatible				
07-254	1/16" (.062")	1/8" (.125")	25'	
07-262	1/16" (.062")	1/8" (.125")	12-1/2'	
07-263	.080"	.140"	12-1/2'	
07-255	.080"	.140"	25'	
07-268	.080"	.140"	164'	
07-267	3/32" (.093")	3/16" (.187")	164'	
07-253	3/32" (.093")	3/16" (.187")	50'	
07-261	3/32" (.093")	3/16" (.187")	25'	
07-264	.117"	.211"	12-1/2'	
07-266	3/32" (.093")	13/64" (.203")	25'	
07-256	.117"	.211"	25'	
07-265	1/8" (.125")	3/16" (.187")	12-1/2'	
07-257	1/8" (.125")	3/16" (.187")	25'	
07-259	1/8" (.125")	1/4" (.250")	25'	
07-251	1/8" (.125")	1/4" (.250")	50'	
07-260	3/16" (.187")	5/16" (.312")	25'	
07-252	3/16" (.187")	5/16" (.312")	50'	
07-258	1/4" (.250")	3/8" (.375")	25'	

- Oregon Fuel Line is a specially formulated gas & oil vinyl tubing — made for use with lawnmowers, chainsaws, and snowmobiles
- Maintains air tight seal on fittings — even in extreme temperatures
- Translucent material resists swelling or hardening
- Compare to Tygon®

Tygon Fuel Lines

OREGON	I.D.	O.D.	Length	Product Code
Compliant with EPA & CARB regulations; E10 compatible				
07-450	1/4"	3/8"	50'	
Compliant with EPA & CARB regulations; E85 compatible Sold in bags of 10 pieces; priced per piece				
07-551	1/8"	1/4"	1'	
07-552	3/16"	5/16"	1'	
07-553	3/32"	3/16"	1'	
07-555	0.080"	0.140"	1'	
Non-compliant with EPA & CARB regulations; E10 compatible				
07-153	3/32"	3/16"	50'	
07-157	1/8"	3/16"	25'	
07-151	1/8"	1/4"	50'	
07-152	3/16"	5/16"	50'	
07-150	1/4"	3/8"	50'	
07-154	1/16"	1/8"	50'	
07-155	0.080"	0.140"	50'	
07-156	0.117"	0.211"	25'	
07-158	5/16"	7/16"	50'	

Tygon fuel lines, Oregon fuel lines, and Oregon primer bulbs are compatible with up to 10% Ethanol blend fuels unless otherwise stated. Using Ethanol blends higher than 10% may speed deterioration and cause leakage.

F

Fuel Line / Accessories

OREGON	Replaces	Description	Product Code

Fuel Lines

07-016		**Braided Fuel Line** Grease & oil resistant Non-compliant with EPA and CARB regulations OD: 7/16", ID: 1/4", length: 25 ft	
07-076		**Fuel Line** Clear material Compliant with EPA and CARB regulations OD: 3/8", ID: 1/4", length: 50 ft	
07-008	Homelite 63744A Homelite 63745A	**Molded Fuel Line** Fits super XL-12 Length: 9"	
07-060	Honda 95001-45200-40S Honda 95001-45140-40 Code: 2930873	**Fuel Line** Fits GX110, 120, 140, & 160 (4.5 x 165) Formed ends	
07-061	Honda 95001-45300-40S Honda 95001-45222-40 Code: 2979748	**Fuel Line** Fits GX240, 270, 340, & 390 (4.5 x 300) Formed ends	
07-071	Husqvarna 501 28 59-01	**Fuel Line** Fits chainsaws & trimmers 140, 162, 266, 36, & 61	
07-145	Husqvarna 532 40 11-35	**Fuel Line** - NEW For Husqvarna Rear Emission	
07-146	Husqvarna 532 40 11-37	**Fuel Line** - NEW For Husqvarna	
07-009	McCulloch 215708 McCulloch 301011	**Molded Fuel Line** Fits McCulloch 1010 series ID: 3/16", length: 6-5/16"	
07-135	Stihl 1119-358-7702	**Fuel Line** Fits MS381	
07-136	Stihl 1124-358-7700	**Fuel Line** Fits MS640, 660, 780, 088, & 084	
07-144	Stihl 1121 358 7700	**Fuel Line** - NEW Fits Stihl 024, 026, MS240, & MS260	

F

OREGON	Replaces	Description	Product Code

Fuel Lines

07-072	Stihl 1127-358-7702	**Fuel Line** Fits 029, 034, 036, & 039	
07-134	Stihl 1128-358-7701	**Fuel Line** Fits MS341, 361, 440, & 460	
07-074	Stihl 4128-358-0800	**Fuel Line** Fits FS350 & FS400	
07-075	Stihl 1123-358-7701	**Fuel Line** Fits 021, 023, & 025	
07-167	Stihl 1123-141-8600	**Impulse Line, Chainsaw** - NEW Fits Stihl 021, 023, 025, MS210, MS210C, MS230, MS230C, MS250, & MS250C	
55-139	Shindaiwa 20000-85303	**Fuel Tube Assembly** Fits T25, C25, & C35 model trimmers	
07-011	Shindaiwa 20011-85451 Shindaiwa 20011-85459	**Fuel Line** Fits models T25, T27, C35, & B45	
07-142	Husqvarna 581493301 Red Max 579138304 Red Max 579138306 Red Max 579138307 Red Max 581493301	**Fuel Line Kit** - NEW Fits Red Max EBZ6500, EBZ6500RH, EBZ7500, EBZ7500RH, EBZ8500, EBZ8500RH, & HBZ2610 blowers; BCZ230TS, BCZ2460S, BCZ2460TS, BCZ2650S, BCZ2650TS, & BCZ2660TS brushcutters; HBZ2650F, HEZ2460F, & HEZ2460S edgers; PSZ2460 & PSZ2465S polesaws; LRTZ2460, SGCZ2460S, SRTZ2460, SRTZ2460F & TR2350S trimmers	

Fuel System Breathers & Grommets

55-157	Echo 131300-56430	**Vent Assembly** Fits models GT1100, 2000, 2100, 2102, 2103, 2400, SRM 1500, 1501, 2100, 2300, 2301, 2400, 2500, 2501, 2510, 3000, 3800, SRS 2100, PE 2400, PB1000/1010, 2400, ES 2000, & SHR 2100 For 3/16" line, OD: 3/8", length: 1"	
07-162	Maruyama 261696	**Breather Assembly** Fits Maruyama BC3200, BC420H, BC2300, BC2600, BC2600H, BCL2250, & BC200	

Tygon® fuel lines, Oregon fuel lines, and Oregon primer bulbs are compatible with up to 10% Ethanol blend fuels unless otherwise stated. Using Ethanol blends higher than 10% may speed deterioration and cause leakage.

F

Fuel Line / Accessories

OREGON	Replaces	Description	Product Code

Fuel System Breathers & Grommets

07-126	Echo 132115-46730 Echo 1370030	**Grommet** OD: 5/8", thickness: 1/2" Three holes	
07-099	Maruyama 597949	**Fuel Grommet** Fits Maruyama BL4500SP & BL4600SP	

Fuel System Kits

07-090	13120519832 13120519831	**Fuel Filter Kit** Fits Echo SRM2102, SRM1500, SRM2300, HC160, HC180, HC200, PB265, PB1000, PB255LN, HC2400, CS340, CS400, CS370, & CS450 Includes replacement parts for 13211544330 grommet, V471001860 line, 13201049730 line, and 13201309820 clip	
07-085	13120519832 13120519831	**Fuel Filter Kit** Fits Echo PB403, PB413, PB460, PB460LN, PB500H, PB500T, PB600PB610, PB620, PB413, PB413H, & PB500T, and Shindaiwa EC7500 engine cut-off saw. Includes replacement parts for 13211555930 grommet, A356000031 vent assembly, V490001230 clip, V471000110 line, 13201056330 line , 13201052030 line, and 13120519831	
07-010	Echo 132007-04920 McCulloch 217387	**Fuel Line with Grommet** Grommet fits 3/8" hole ID: 3/32", length: 6"	
07-127	Echo 132115-46730	**Fuel Line with Grommet** Oregon® 07-126 grommet with 8" section of fuel line (3)	
07-022	Homelite DP181767	**Fuel Line with Filter**	
55-119	Kawasaki 49019-2065	**Fuel Line with Filter Assembly** For trimmer models TD18, TD22, TD24, TD33, TD40, & TD48	
07-097	265752	**Fuel Line with Filter** Fits Maruyama BC200, BC230, BC260, BC2550, & BC2800	

F

OREGON	Replaces	Description	Product Code

Fuel System Kits

07-098	268062	**Fuel Line with Filter** Fits Maruyama BC3020 & BL3100	
55-110	Stihl 4112-350-3500	**Fuel Line Assembly** Fits FS80 trimmer	

Hose Clamps

02-041		**Hose Clamp** For 1/8" fuel line, ID: .310"	
02-040		**Hose Clamp** For 1/4" and 3/16" fuel line, ID: .455"	
07-140	Husqvarna 532 12 34-87	**Hose Clamp** - NEW For Husqvarna	
02-700	John Deere TY22462	**Adjustable Clamp** Adjusts from 7/32" to 5/8"	
02-701	John Deere TY22465	**Adjustable Clamp** Adjusts from 9/16" to 1-1/16"	

Filter Bowl Assembly

07-001	Briggs & Stratton 393169 Briggs & Stratton 690612 Kohler 210101 Tecumseh 32439 Clinton 293-32-5 John Deere PT4337 Wisconsin LP43	**Fuel Filter** Use with Oregon® 49-128 gasket and 07-003 replacement bowl	
49-128	Briggs & Stratton 68477 Briggs & Stratton 692190	**Fuel Bowl Gasket** Fits Oregon 07-001	

Fittings

07-393	Honda 16955-ZE1-000 Code: 1427459	**Fuel Tank Joint** Fits GX110, 120, 140, 160, 240, 340, & 390	

F

Fuel Line / Accessories

OREGON	Replaces	Description	Product Code	
Fittings				
02-860	Briggs & Stratton 67218	**Metal Fitting** 1/8" pipe thread 90° elbow without screen		
02-861	Briggs & Stratton 230318	**Metal Fitting** 1/8" pipe thread Straight without screen		
07-390	MTD 751-3054	**"L" Fuel Fitting (Metal)** For MTD & others Size: 1-3/8" x 1-1/16" 1/4" and 7/16" nipples Use with Oregon 07-392 fuel tank bushing		
07-391	Briggs & Stratton 698183	**"I" Fuel Fitting (Metal)** For MTD & others Length: 1-1/2" 1/4" and 7/16" nipples Use with Oregon 07-392 fuel tank bushing		
Fuel Line Shut-Offs				
07-125	Briggs & Stratton 698181	**Fuel Shut- Off Valve** For 1/4" fuel line In-line 90° 1/4 turn operation		
07-406	Briggs & Stratton 698183 Briggs & Stratton 494768 Briggs & Stratton 493960 Snapper 1-6325	**Fuel Shut-Off Valve** In-line shutoff 1/4" nipples Composite material		
07-408	Briggs & Stratton 399517 Briggs & Stratton 396244 Briggs & Stratton 698182	**Fuel Shut-Off Valve** 1/4" nipple Composite material		
07-409	Honda 16950-ZG9-M02 Code: 5028923	**Fuel Shut-Off Valve** For Honda models GXV135 & GXV160		
07-403	Scag 48568	**Fuel Shut-Off Valve** Heavy-duty ball valve For 1/4" fuel line In-line shutoff		
07-404	MTD 751-0171	**Fuel Shut-Off Valve** Has screen filter 1/4" nipple Use with Oregon® 07-392 fuel tank bushing		

F

OREGON	Replaces	Description	Product Code

Fuel Line Shut-Offs

07-407		**Fuel Shut-Off Valve** Has screen filter 1/4" nipple 1/4" turn ball valve	
07-406	Snapper 1-6325 Briggs & Stratton 494768 Briggs & Stratton 493960	**Fuel Shut-Off Valve** In-line shutoff 1/4" nipple Composite material	
69-507		**Hanging Display Card** 20 pack of Oregon 07-406 Priced per card, not individually	
07-400	Bolens 1703896 Bolens 1718029 Gravely 18563 John Deere AM31850 John Deere PT8655 Noma 42879 Toro 304-71 Lawn Boy 677052	**Fuel Shut-Off Value** Metal (zinc) Tank mount with screen 1/8" pipe thread 1/4" nipple (fuel line mount) Scag 48056 AMF 42879	

Fuel Pumps

07-700	Briggs & Stratton 808656 Kohler 24 393 16	**Pulse Fuel Pump** For many models	

Fuel Tank Bushing

07-392	Bolens 173-8433 MTD 735-0149 Noma 42690 Simplicity 1654930 Snapper 1-2337 Toro 46-6560 Wheel Horse 1654930	**Fuel Tank Bushing** For 33/64" diameter fuel tank Fits Oregon® 07-390, 07-391, & 07-404 Scag 48309 Ariens 75093	

F

Fuel Line / Accessories

OREGON	Replaces	Description	Product Code

Primer Bulbs

49-058	Briggs & Stratton 494408 Briggs & Stratton 694394	**Primer Bulb** Fits Quantum series engines, 3.5, 3.75, and 4 HP For models with Pulsa-prime carburetors	
49-079	Briggs & Stratton 496115 Briggs & Stratton 694395	**Primer Bulb** Fits Quantum engines, 5, 5.5, and 6 HP	
49-326	Cub Cadet/MTD 951-10639 Cub Cadet/MTD 951-10639 Cub Cadet/MTD 951-10639 Cub Cadet/MTD 751-10639A Cub Cadet/MTD 751-10639	**Primer Assembly** Fits 31A model series snow throwers (2008–2014)	
07-088	Echo 12318139130 Tanaka 6685139	**Primer Bulb** Fits Echo PB770, PB770H, PB770T, SRM, CS310, CS340, CS370, CS400, SRM400, PB770T, & PB770, & Tanaka TBC300, TBC2800, TBC265, TBC270, TBC250, THT2510, THT2510-2540, & MTD2522	
07-084	Echo 12538108660 Maruyama 261874	**Primer Bulb** Fits Echo PB265L, PB403H, PB403T, PB460LN, PB620, PB620H, PE2400, PE265, GT200, GT2000, & GT230, & Maruyama BC200, BC230, BC260, BC2550, BC2800, BCL2250, BC3200, BC3100, BL4500SP, & BL4600SP	
55-092	Kawasaki 49043-2058 Kawasaki 310850-6680A	**Elbow & Primer** Fits models KT12, KT18, TD24, & TD33 trimmers	
07-073	Stihl 4130-350-6200	**Primer Bulb with Line** Fits FS350 & FS400	
55-138	Ryobi 683974	**Fuel Line & Primer Assembly**	
49-034	Tecumseh 632047	**Primer Bulb** Fits TNT100, TNT120, ECV105, ECV110, ECV120, & TVS series with retainer clip For dual system carb, non-vented OD: 1", height: 3/4"	

⚠ Tygon® fuel lines, Oregon fuel lines, and Oregon primer bulbs are compatible with up to 10% Ethanol blend fuels unless otherwise stated. Using Ethanol blends higher than 10% may speed deterioration and cause leakage.

F

Primer Bulbs

OREGON	Replaces	Description	Product Code
49-085	Tecumseh 36045A	**Primer Bulb** Fits VLV-126, VLV-50, VLV-60, VLV-65, & VLV-66 model Vector series engines & LEV non-vented	
55-187	Walbro 188-506	**Primer Bulb** Fits model WA-135, WA-148A, WA-150, WA-154, WA161, & WA-162 carburetors	
55-188	Walbro 188-508	**Primer Bulb** Fits model HDA-97 carburetor	
55-189	Walbro 188-509	**Primer Bulb** Fits model HDA-51, WA-180, WA-181, WA-184, WA-185, WA-187, WA-194, WT139, WT-145, WT-184, WT-243, & WT50 carburetors	
49-026	Walbro 188-11 Echo 123181-26030 Hoffco 211844H Shindaiwa 20036-81670	**Primer Bulb** For WZ series carburetors	
49-027	Walbro 188-13 Green Machine 4467213 Homelite 01201 Homelite UP04802 Red Max 1491-61510	**Primer Bulb** For HDA series carburetors	
49-028	Zama 0057003 Homelite A01195A	**Primer Bulb** For C1Q carburetors	

Duck Bill Valve

07-004	Homelite 69451 Homelite UP06862	**Duck Bill Valve** For fuel caps Fits XL, XL2, & Super 2 chainsaws	

Tygon® fuel lines, Oregon fuel lines, and Oregon primer bulbs are compatible with up to 10% Ethanol blend fuels unless otherwise stated. Using Ethanol blends higher than 10% may speed deterioration and cause leakage.

Fuel Line / Accessories

OREGON	Replaces	Description	Product Code

Fuel Tanks

07-600	Honda 17510-ZE1-020ZA Code: 3683661	**Fuel Tank** Fits GX160	
07-601	Honda 17510-ZE2-10ZA Code: 3690070 Honda 17510-ZE2-20ZA	**Fuel Tank** Fits GX240	
07-602	Honda 17510-ZE3-010ZA Code: 3713278 Honda 17510-ZE3-20ZA Honda 17510-ZE3-030ZA	**Fuel Tank** Fits GX360, GX390, & GX340	

Fuel Caps

07-303	Briggs & Stratton 298425 Briggs & Stratton 493982	**Fuel Cap** For 3, 3.5, 4, & 5 HP engines Fits 60000, 80000, 92000, 100000, & 130000 series ID: 1-1/2" (high dome)	
07-304	Briggs & Stratton 692046 Briggs & Stratton 397974 John Deere PT11028	**Fuel Cap** Fits all Max and Quantum series engines and 100700 series engines For 3-1/2 thru 5 HP	
07-307	Briggs & Stratton 490075 Briggs & Stratton 494559 John Deere PT 15868	**Fuel Cap** Fits 3–5 HP horizontal engines model series 90200, 91200, 133200, & 135200 1/4 turn style with two locking ears	
55-123	Echo 131004-06320 Snapper 4-2110	**Fuel Cap** For most Echo trimmers with Kioritz engines Also fits model PB200 blower OD: 1-3/16"	
55-120	Echo 131004-0632-0 John Deere PT9498	**Fuel Cap** For GT series trimmer prior to 1991 and many brands and models ID: 1-3/16"	
55-122	Echo 131004-40930 Echo 131004-48730 Echo 131004-55730 Echo 131004-55830 John Deere AM105998	**Fuel Cap** For newer GT series trimmers (1992 & newer)	

F

Fuel Caps

OREGON	Replaces	Description	Product Code
55-008	Echo 131004-06610 Echo 131600-09860 Echo 131600-09861	**Fuel Cap** Vented Fits 4500 & 4600 model blowers ID: 1-1/2"	
07-317	Exmark 513508	**Fuel Cap**	
07-024	Homelite DA06486 Homelite UP00106380	**Fuel Cap** Fits models Z625CDV, Z625CD, Z725DCV, Z7825SD, Z725CB, Z830SB, D630CD, D732DCV, D830SD, D830CV, D830SV, Z725SE, & Z7825CD OD: 2", ID: 1-19/32" threaded	
55-124	Homelite A-00982-B	**Fuel Cap** For ST series trimmers with straight shaft OD: 1-1/2"	
07-025	Honda 17620-ZL8-003	**Fuel Cap** Fits GCV130 & GCV160 model engines	
55-126	Honda 17620-ZE2-W00	**Fuel Cap** Fits 4 – 8 HP engine models GX110, GX120, GX140, GX160, & GX240 Tang style cap for 1-1/2" opening	
07-318	Honda 17620-ZE7-000 Code: 2289833	**Fuel Cap** Fits GXV120 & GXV160	
07-319	Honda 17620-ZH7-023 Code: 5344817	**Fuel Cap** Fits models GX340 & GX390	
55-125	Honda 176200-ZH7-013 Honda 17620-ZH7-023	**Fuel Cap** Fits 4 – 8 HP engine models GX110, GX120, GX140, GX160, & GX240 Tang style cap for 1-1/2" opening	
55-018	Kawasaki 14069-2056 Tanaka 695-000510	**Breather** For brushcutters and trimmers Fits model TA024 and some KAAZ trimmers Use with Oregon® 55-017	

F

Fuel Line / Accessories

OREGON	Replaces	Description	Product Code	
Fuel Caps				
55-017	Kawasaki 51049-2057 Kawasaki 51049-2091	**Fuel Cap – Vented** For brushcutters and trimmers Fits model TA024, some KAAZ trimmers, and Husqvarna 140 blower ID: 1-1/2"		
55-127	Maruyama 263800	**Fuel Cap** Fits MC2300, MC2600, & MC3210		
07-026	Mitsubishi KF05011DA	**Fuel Cap** Fits TL33, TL43, & TL53		
07-309	MTD 751-3111 MTD 951-3111 MTD 751-0603 Murray 92317 Encore 363257 John Deere AM107344	**Fuel Cap** Fits MTD riders, Deere STX series tractors and SRX series riders Neck: 2-1/4"		
07-315	Scag 48311 Bobcat 48587 Bunton PL8122 Murray 23711 Power King 23-7602 Wheel Horse 111474	**Fuel Cap** ID: 2-1/4"		
55-097	Shindaiwa 200000-85200	**Fuel Cap - Non-Vented** Fits models T20, T25, C25, B45, LT20, F21, C20, & T/C24 ID: 1-/2"		
07-308	Snapper 1-2515	**Fuel Caps** For Snapper rider with vent Neck: 2-1/4"		
56-019	Stihl 0000-350-0520	**Fuel Cap** Fits 023, 025, 026, & 028		
07-131	Stihl 1130-350-0500	**Fuel Cap** Fits 017, 018, 019, MS170, 180, & 190		

F

Fuel Caps

OREGON	Replaces	Description	Product Code
07-132	Stihl 0000-350-0531	**Fuel Cap** Fits 066 & MS660	
55-109	Stihl 4114-350-0502	**Fuel Cap** Fits FS80 (new style)	
55-102	Stihl 4126-350-0501C	**Fuel Cap** Fits FS56, 66, 81, & FS86	
55-106	Tanaka 595-0165-C-92	**Fuel Cap** For trimmers Also fits Kawasaki ID: 1-1/4"	
55-132	Tanaka 5950165C91 Tanaka 5950423Q910 Tanaka 5950423Q90	**Fuel Cap** Fits models TBC265 & TBC500 string trimmers and THT200, THT212, THT230, THT232, & THT240 hedge clippers OD: 1-3/8"	
07-314	Tecumseh 35355	**Fuel Cap** For most plastic fuel tanks Opening on fuel tank: 1-1/2"	
07-013	Toro 42-0680	**Fuel Cap** Fits S-200 & S-620 snow throwers	
07-312		**Fuel Cap** For 2-1/4" neck Fits Toro Suzuki 4-cycle, Toro commercial, Poulan Pro, Roper, & John Deere STX30 & STX38	

F

Fuel Line / Accessories

OREGON	Replaces	Description	Product Code

In-Line Fuel Filters

07-112	Briggs & Stratton 492836 Briggs & Stratton 493629 Briggs & Stratton 691035 Cushman 825619 Toro 18-1520	**In-Line Fuel Filter, Metal** For 5/16" fuel line	
07-160		**Fuel Filter, Translucent** For 1/4" and 5/16" fuel line OD: 1-5/8", length: 3-1/2" 80 micron	
07-107	Bobcat 38666 John Deere AM108356 Briggs & Stratton 493629 Briggs & Stratton 691035 Tecumseh 34279A	**Fuel Filter, Clear** For 1/4" fuel line OD: 1-5/8", length: 2-3/8" 80 micron	
07-102	Bolens 1727491 John Deere AM36483 Snapper 1-1777	**In-Line Fuel Filter, White** For outboards, lawn mowers, go-karts, motor scooters, and industrial engines OD: 7/8", length: 2-1/8" 1/4" nipple 75 micron	
69-509		**Hanging Display Card** 20-pack of Oregon® 07-102 Priced per card, not individually	
07-129	16955-ZE1-000 16956-ZE1-000	**Fuel Filter, Brass** Fits BX120, 140, 160, GX200, 270, 340, & 390	
07-100	John Deere AM38708 Snapper 7-6572 Kees 363333 Briggs & Stratton 394358	**In-Line Fuel Filter, White** For engines with fuel pumps OD: 1-3/8", length: 1-3/4" 1/4" nipple 75 micron	
69-511		**Hanging Display Card** 20-pack of Oregon 07-100 Priced per card, not individually	

Oregon in-line fuel filters are E85 compatible unless otherwise stated.

F

In-Line Fuel Filter

OREGON	Replaces	Description	Product Code
07-101	John Deere PT4265 Toro 42-5240 Snapper 1-4359 Scag 48057-02 Briggs & Stratton 298090	**In-Line Fuel Filter, Red** For outboards, lawn mowers, chainsaws, go-karts, motor scooters, and industrial engines OD: 1-3/8", length: 1-3/4" 1/4" nipple 125 micron	
69-508		**Hanging Display Card** 20-pack of Oregon® 07-101 Priced per card, not individually	
07-103	John Deere AM116304 Onan 149-2206-01	**In-Line Fuel Filter, Translucent** For 1/4" or 5/16" fuel line OD: 1-5/8", length: 3-3/4" 30 micron Heavy-duty	
69-510		**Hanging Display Card** 8-pack of Oregon 07-103 Priced per card, not individually	
07-064	Briggs & Stratton 695666	**In-Line Fuel Filter, Translucent** For 1/4" fuel line OD: 1-1/8", length: 3-1/2" 30 micron	
07-141	Husqvarna 506264111	**In-Line Fuel Filter** - NEW Fits Husqvarna 36, 40, 41, 42, 45, 50, 51, 61, 66, & 394 For 3/16" fuel line Inner diameter: 3/16"	
07-062	Kawasaki 49019-1055	**In-Line Fuel Filter, Translucent** For 5/16" fuel line	
07-063	Kawasaki 49019-7001 Kawasaki 49019-0707 Kawasaki 49019-0014 Kohler 24-050-10S	**In-Line Fuel Filter, Translucent** For 1/4" fuel line 15 Micron	
07-122	Kawasaki 49019-7005	**Fuel Filter, Translucent** For 1/4" fuel line OD: 1-5/8", length: 2-3/8" 30 micron	

F

Fuel Line / Accessories

OREGON	Replaces	Description	Product Code

In-Line Fuel Filter

Oregon® in-line fuel filters are E85 compatible unless otherwise stated.

07-111	Kohler 24-050-02 Toro 83-1320 Toro 94-2690	**In-Line Fuel Filter, Metal** Fits Toro Greensmaster 300, 3000, 3100, and Sand Pro For 1/4" fuel line 10 micron	
07-331	Kohler 25-050-07S	**Fuel Filter, White** For 1/4" and 5/16" fuel line OD: 5/16", length: 2-1/4" 75 micron	
07-332	Kohler 25-050-22S	**Fuel Filter, Translucent** For 1/4" and 5/16" fuel line Plastic body with blue screen cage OD: 1-1/2", length: 4-1/2" 51 micron	
07-104	Kubota 13351-4301-0 Kubota 12581-43012 Kubota 12581-43010 Kubota 12691-43010	**In-Line Fuel Filter, Translucent** 5/16" nipple OD: 1-7/8", length: 3-1/2"	
07-110		**In-Line Fuel Filter, Clear** For 5/16" fuel line 80 micron	
07-124	Universal	**Fuel Filter, Translucent** For 1/4" or 15/16" fuel line OD: 1-5/8", length: 3-3/4" 10 micron	
07-143	Husqvarna 579 13 83-09	**Fuel Filter Assembly** - NEW Fits Red Max/Husqvarna 226R, 226RJ, & 236R	

In-Tank Fuel Filter

07-215		**Fuel Filter** For 3/16" inlet Fits 2-cycle engines on chainsaws, trimmers, and blowers using porous plastic filter 40 micron	
07-206	Echo 131205-06530 John Deere PT7610 Tillotson OW-802 Toro 34-7260 Weed Eater 91481	**Fuel Filter** For 3/16" fuel line OD: 9/16", length: 1-1/2"	

Oregon in-tank fuel filters are compatible with up to 10% Ethanol blend fuels unless otherwise stated. Using Ethanol blends higher than 10% may speed deterioration.

F

In-Tank Fuel Filter

OREGON	Replaces	Description	Product Code
07-118	Honda 17672-ZE2-W01 Code: 4270864	**Fuel Filter** Fits models GX160, GX240, GX340, & GX390	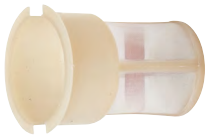
07-201	Homelite 64083-1 Poulan 23364 Tillotson 95-182	**Fuel Filter, Felt** Fits Oregon® 07-206 1" L x 1/4" ID x 9/16" OD	
07-213	Husqvarna 503-4432-01	**Fuel Filter** For 3/16" fuel line Fits models 36, 40, 41, 42, 45, 50, 51, 61, 66, & 394 Pro 30 Micron	
07-207	John Deere PT12362 Tillotson OW-497 Weed Eater 24841	**Fuel Filter** For 1/8" fuel line OD: 13/16", length: 1-1/2"	
07-163	Kohler 17 050 15-S Kohler 17 050 20-S	**Fuel Tank Filter - NEW** Fits Kohler Command Series CH260, CH270, CH395 & CH440 Length: 2-3/16", top outer diameter: 1-7/16", bottom outer diameter: 1-3/16"	
07-164	Kohler 24 050 13-S	**Fuel Filter - NEW** Fits Kohler CH18-CH25, CH620-CH740, CH750, CH940-CH1000, CV17-CV25, CV670-CV750, CV940-CV1000, LH630-LH755, LV625-LV680, SV710-SV740, & SV810-SV840 For 1/4" fuel line, inner diameter: 1/4"	
07-165	Kohler 25 050 22-S	**Fuel Filter - NEW** Fits KohlerCH11-CH16, CH18-CH25, CH410-CH450, CH620-CH730, CV13-CV25, CV430-CV493, CV670-CV730, SV470-SV740, TH16, TH18, TH520, & TH575 For 1/4" and 5/16" fuel lines Inner diameter: 1/4"	
07-166	Honda 16910-ZE8-015	**Fuel Filter - NEW** Fits Honda engines GX100 KRS2, GX100U (KRS2, KRSB), GX160U1 VTH4, GX360K1, GX390U1 (VS49, VSD4, VTH4), GX610, GX610K1, GX610R1, GX610U1, GX620, GX620K1, GX620R1, GX620U1, GX630, GX670, GX670R, GX670U, GXV160UH2, GXV270, GXV340, GXV340A2, GXV340K1, GXV340K2, GXV340RT2, GXV340UA2, GXV340UT2, GXV390, GXV390A1, GXV390K1, GXV390RT1, GXV390UA1, GXV390UT1, GXV610, GXV610K1, GXV610R1, & GXV610U1	

Oregon in-tank fuel filters are compatible with up to 10% Ethanol blend fuels unless otherwise stated. Using Ethanol blends higher than 10% may speed deterioration.

F

Fuel Line / Accessories

OREGON	Replaces	Description	Product Code	

In-Tank Fuel Filter

07-094	Maruyama 267328	**Fuel Filter** Fits Maruyama BC200C, BC2300, BC2600, BC3200, & BC4200		
07-200	McCulloch 93720 McCulloch 216985 Homelite 49422	**Fuel Filter** For most saws with 1/8" in-tank pickup OD: 1/2", length: 1-1/4"		
07-204	McCulloch 63932	**Felt Fuel Filter** OD: 3/4", length: 1"		
07-066	Poulan 530095646	**Fuel Filter** For 1/8" fuel line OD: 1/2", length: 1-1/2"		
55-112	Shindaiwa 20011-85400	**Fuel Line with Filter** Fits models T20, T25, C25, C35, B45. LT20, HT20 & C20 trimmers, also saws, blowers, and hedge trimmers Lead weight Length: 4-3/8"		
07-133	0000-350-3506	**Fuel Filter** Fits FS410, FS420, FS300, FS350, FS400, FS450, & FS480 OD: 3/4", length: 1-3/4"		
07-109	Stihl 1115-350-3503	**Fuel Filter** For 1/4" fuel line on most models of chainsaws OD: 23/32", length: 1-3/4"		
07-217	Stihl 1120-350-3500	**Fuel Filter** Fits chainsaw models 021, 023, 025, 020T, 070, 034, 038, 029, & 036		
07-205	Stihl 1110-358-1800	**Foam Fuel Filter** OD: 5/8", length: 1-1/4"		
07-092	Tanaka 6684620	**Fuel Filter** Fits Tanaka TBC250SF, TBC260SF, TBC340PF, TBC5500, TBC450, TBC280, & TBC225		
07-094	Tanaka 6692273	**Fuel Filter** Fits Tanaka Brush Cutter TBC400, TBC422, TBC500, TBC600, TBL4600, TBL500, & TBL7800		

Oregon in-tank fuel filters are compatible with up to 10% Ethanol blend fuels unless otherwise stated. Using Ethanol blends higher than 10% may speed deterioration.

F

In-Tank Fuel Filter

OREGON	Replaces	Description	Product Code
07-214	Walbro 125-527	**Fuel Filter** Dual filtration, felt and stainless steel mesh element Suitable for engines up to 30 CC	
07-219	Walbro 125-528	**Fuel Filter** For engines up to 80 CC 3/16" inlet	
07-137	Walbro 125-552	**Fuel Filter, Felt** OD: 3/4", length: 1-1/4"	
07-208	Zama ZF2	**Fuel Filter** For 3/16" fuel line Use on small CC engines 175 micron	
07-209	Zama ZF3	**Fuel Filter** For 1/8" fuel line Use on larger CC engines 175 micron	
07-210	Zama ZF4	**Fuel Filter** For 3/16" fuel line Use on larger CC engines 175 micron	
07-211	Zama ZF5	**Fuel Filter** For 1/4" fuel line Use on larger CC engines 175 micron	

In-Tank Fuel Filter Assortment

OREGON	Qty.	Description	Product Code
08-075-0	74	In-Tank Fuel Filters Standard refill quantity: 10	

Components

07-200	10	1/8" Inlet – Plastic Case	
07-201	10	Felt Only – fits 07-206	
07-204	5	Felt Style – for McCulloch	
07-205	5	Foam Style – for Stihl	
07-206	12	1/8" Inlet, Felt Style – Small	
07-207	10	1/8" Inlet, Felt Style – Large	
07-215	7	3/16" Inlet – Porous Plastic	

Oregon in-tank fuel filters are compatible with up to 10% Ethanol blend fuels unless otherwise stated. Using Ethanol blends higher than 10% may speed deterioration.

F

Fuel Line / Accessories

OREGON	Replaces	Description	Product Code

Fuel Grommets

07-147	Red Max T155185300 Red Max DP181767	**Fuel Grommet** - NEW For Red Max, Ryobi, Homelite, & Kawasaki 2 inlet	
07-148	Stihl 0000-930-2803 Stihl 0000-989-0516 Stihl 00009375004	**Grommet with Hose** - NEW Fits Stihl FS350, FS400, FS450, & FS480	

Oil Seals

36-414	Kohler 25 032 06-S	**Oil Seal** - NEW Fits Kohler CH18, CH20, CH22, CH23, CH25, CH620, & CH640	

F

OREGON	Replaces	Description	Product Code
86-019	Bunton Exmark Encore	**Commercial Walk-Behind** Bag only, frame not included	
86-033	Exmark #103-0431	**Bag for Rider** Fits Lazer Z and Lazer HP	
86-036	Honda 81310-758-S00	**Rear Bag** For Honda Harmony rear bag	
86-002	Honda 81320-VG0-013	**Grass Bag -** NEW Fits Honda HRC216 & HRC215 Frame and Hardware not included	
86-009	Lawn Boy 679966	**Heavy-Duty Side Bag** For side bagger	
86-001	Lawn Boy 679966	**Medium-Duty Side Bag** For side bagger	
86-037	Lawn Boy 684333	**Commercial Side Bag** For side discharge with plastic frame 11.3 oz.	
86-025	MTD 764-0221	**Rear Bag** Fits twin bag catchers on 500 series rear engine riders and 400 & 600 series front engine tractors	

Grass Bags

OREGON	Replaces	Description	Product Code
86-010	Snapper 1-2321	**Rear Bag** For commercial 21" mowers, 21 CV series cast aluminum deck, 8" longer than 86-004	
86-005	Snapper 5-0711	**Bag Slide** Use with Oregon® 86-004 & 86-010	
86-008	Snapper 1-8177 Snapper 1-9251 Yazoo 200-013	**Rear Bag** For rear bag riding mowers For single bag riders	
86-029	Snapper 1-9250	**Rear Bag** For rear engine riders with twin bag systems	

G

OREGON	Replaces	Description	Product Code
59-200	Stihl 4228-710-6050A	**Hedge Trimmer Blade Set** Fits HS45 18" trimmers	

59-201	Stihl 4228-710-6051A	**Hedge Trimmer Blade Set** Fits HS45 24" trimmers	

59-202	Stihl 4237-710-6051	**Hedge Trimmer Blade Set** Fits HS81T 24" "T" model Stihl trimmers Perfect for trimming and sculpting	

59-203	Stihl 4237-710-6052	**Hedge Trimmer Blade Set** Fits HS81T 30" "T" model Stihl trimmers Perfect for trimming and sculpting	

Ignition Parts

OREGON	Replaces	Description	Product Code	

Ignition Coils

33-362	Briggs & Stratton 298502 John Deere AM30950	**Ignition Coil** For 2, 3, 3.5, & 4 HP engines, points ignition Fits 80000, 92000, & 110000 series Use Oregon® 33-342 for electronic ignition	
33-365	Briggs & Stratton 298968 Briggs & Stratton 299366 John Deere AM35759	**Ignition Coil** For 7, 8, 10, & 11 HP engines, points ignition Fits 170000, 190000, 220000, & 252000 series Use Oregon 33-344 for electronic ignition	
33-340	Briggs & Stratton 697037 Briggs & Stratton 397358 Briggs & Stratton 395491 Briggs & Stratton 395490 Briggs & Stratton 298316 John Deere PT10998	**Ignition Coil** For 5 HP engines with electronic ignition Fits models 130200 thru 132200 horizontal & 130900 thru 132900 vertical	
33-341	Briggs & Stratton 802574 Briggs & Stratton 799381 Briggs & Stratton 790717 Briggs & Stratton 692605 Briggs & Stratton 590454 Briggs & Stratton 493237 Briggs & Stratton 491760	**Ignition Coil** For 5 HP Quantum and Europa engines with electronic ignition	
33-342	Briggs & Stratton 793281 Briggs & Stratton 697036 Briggs & Stratton 398593 Briggs & Stratton 496914 John Deere PT11047	**Ignition Coil** For 2-4 HP engines with electronic ignition Electronic version of Oregon 33-362	
33-344	Briggs & Stratton 398811 Briggs & Stratton 395492 Briggs & Stratton 398265 John Deere PT 15339	**Ignition Coil** For 7-12 HP engines with electronic ignition Electronic version of Oregon 33-365	
33-347	Briggs & Stratton 798853 Briggs & Stratton 715231 Briggs & Stratton 690248 Briggs & Stratton 591459 Briggs & Stratton 495859 Briggs & Stratton 492341 Briggs & Stratton 491312 Briggs & Stratton 490586	**Ignition Coil** For 10-13 HP L-Head and Vanguard 9 HP, 12.5 HP, & 14 HP engines	
33-345	Briggs & Stratton 394988 Briggs & Stratton 394895 Briggs & Stratton 394891 Briggs & Stratton 392329	**Ignition Coil** For 16–18 HP & twin-cylinder L-Head engines with electronic ignitions Fits models 400400 thru 422700	
33-352-0	Briggs & Stratton 691060	**Ignition Coil** For Intek V-Twin engines	

I

OREGON	Replaces	Description	Product Code

Ignition Coils

33-353	Briggs & Stratton 695711	**Ignition Coil** For 11 & 12 CID Intek engines	
33-348	Honda 30500-ZE1-063 Honda 30500-ZE1-053 Honda 30500-ZE1-043 Honda 30500-ZE1-033 Honda 30500-ZE1-023 Code: 4589693	**Ignition Coil** Fits model GX110, GX120, GX140, & GX160 Solid state module	
33-521	Honda 30500-ZF6-W02 Honda 30500-ZE2-023 Code: 7032428	**Ignition Coil** Fits most GX240, GX270, GX340, & GX390 series engines Includes spark plug connector	
33-520	Honda 30500-ZE7-043 Honda 30500-ZE7-033 Code: 7199227 Honda 30500-ZE7-063	**Ignition Coil** Fits most GXV160 series engines	
33-522	Honda 30500-ZG9-M02 Code: 4581476	**Ignition Coil** Fits most GXV120 series engines	
33-151	Honda 30500-ZL8-004	**Ignition Coil** Fits models FG400, FG500, GC135, GC160, GCV135, & GCV160	
33-254	Husqvarna 544018401 Husqvarna 503901401	**Ignition Coil** Fits saw models 51, 55, & 55 Rancher (2000–2007)	
33-518	Kohler 24-584-15-S Kohler 24-584-036-S Kohler 24 584 11-S Kohler 24 584 11 Kohler 24 584 03 Kohler 24 757 23	**Ignition Coil** Fits Command models CH20 thru CH25, CV22 thru CV25, & CH 730 & CH 740 model engines with Spark Advance Module (SAM)	
33-519	Kohler 52-584-02-S	**Ignition Coil** Fits models M18 thru M20 For 18HP & 20HP model engines	

Ignition Parts

OREGON	Replaces	Description	Product Code	

Ignition Coils

33-333	Kohler 231281 Kohler 231281S Kohler 41 519 21-S Tecumseh 32080 John Deere AM38411	**Ignition Coil** For 6-16 HP engines Fits K141, K161, K181, K241, K301, K321, & K341 series, single-cylinder engine with battery ignition	
33-525	Robin EY-20	**Ignition Coil** Fits EY-20 model engines	
33-244	Stihl 0000-400-1300	**Ignition Coil** Fits chainsaw models 024, 026, 028, 034, 036, 044, 046, & 048, trimmer models FS360 & FS420	
33-243	Stihl 0000-400-1306 Stihl 0000-400-1302	**Ignition Coil** Fits chainsaw models 021, 023, & 025, trimmer models FS 160, FS 180, & FS 220	
33-245	Stihl 1122-400-1314	**Ignition Coil** Fits chainsaw models 046, 066, MS460, MS650, & MS660	
33-346	Tecumseh 34443A Tecumseh 34443 Tecumseh 34443B Tecumseh 34443C Tecumseh 34443D	**Ignition Coil** Fits models H30, H35, H40, H50, H60, H70, HH50, HH60, HH70, HS40, HS50, HSK40, HSK60, HSK600, HSK635, HSK70, HSK840, HSK845, HSK850, HSK870, HSSK40, HSSK50, HSSK55, HXL35, LAV35, LAV40, LAV50, LEV100, LEV105, LEV115, LEV120, LEV80, LEV90, LH195, HXL840, LV148, LV156, LV195, OH195, OHH60, OVRM105, OVRM120, OVRM50, OVER55, OHH45, OHH50, OHH55, OHH60, OHH65, OHSK50, OHSK55, OHSK60, OHSK65, OHSK70, OV195, OVRM60, OVRM65, TVM125, TVM140, TVS100, TVS105, TVS115, TVS120, TVS600, TVS75, TVS840, TVS90, V70, VH50, VH70, VLV126, VLV40, VLV50, VLV55, VLV60, VLV65 VLXL50, VLXL55, VSK90, & VSK100	

I

OREGON	Replaces	Description	Product Code

Ignition Coils

33-343	Tecumseh 35135A Tecumseh 35135 Tecumseh 35135B	**Ignition Coil** Fits TVM, TVXL, 170-220, OVXL120, HM70 thru HM100, & OHM-OHSK120 For 7 HP thru 12 HP, medium frame engines	
33-363	Tecumseh 30560A	**Ignition Coil** For 3-10 HP engines Fits LAV, V, H, HS, VM series, & most point ignition engines	
33-150	Tecumseh 37137 Tecumseh 36344 Tecumseh 36344A	**Ignition Coil** Fits models OHV 110, OHV125, OHV130, OHV135, OHV140, OHV150, OHV165, OHV170, OHV175, & OHV180	

Spark Plug Boots/Terminal

33-213	Husqvarna 501 485 402	**Spark Plug Boot** 45° angle Fits brushcutter models 232, 235, 322, & 325	
33-204	Husqvarna 501-485-402	**Spark Plug Boot** Fits chainsaw models 340, 345, 346, 350, & 351 Protects plug from moisture, 90 degrees, eliminates shock, positive connection	
33-200	NGK VBOF 8032 45	**Spark Plug Boot** 45° angle For overhead valve engines	
33-208	Homelite A55373-A	**Spark Plug Boot with Spring** 5 mm for trimmers & chainsaws	
33-215	Honda 30700-ZE1-000 Honda 30700-ZE1-013	**Spark Plug Boot** Fits GX11–GX390	
33-216	Honda 30700-ZJ1-841 Honda 30700-ZJ1-003	**Spark Plug Boot** Fits GX120, GX610, GX620, GX670, GXV610, & GXV620	

Ignition Parts

OREGON	Replaces	Description	Product Code	

Spark Plug Boots/Terminal

33-516	Kawasaki 21130-0256 Shindaiwa 22102-72220 Kawasaki 20010-72221 Mitsubishi TR64961	**Spark Plug Boot with Spring** Fits Kawasaki TD26, TD40, TD43, & TD48, Shindaiwa T25, T27, & C35, Mitsubishi TL26, TL33, TL43, & T200	
36-425	Echo 159012-03433	**Spark Plug Boot** - NEW Fits Echo CS302, CS4600, PB230, PB250, PB500, SRM230, SRM260, SRM280, SRM310, SRM2000, SRM2500, SRM3000, & SRM4600 Size: 5.0mm Angle: 90	
36-423	Echo A27000013	**Spark Plug Boot** - NEW Fits Echo PB265L & PPT265S Size: 7.0mm Angle: 45	
36-424	Echo 159012-01620	**Spark Plug Boot** - NEW Fits Echo CS280, CS300, CS3000, PB200, PB400, PB1000, PB2400, SRM200, SRM340, SRM1500, SRM2100, SRM2400, & SRM3100 Size 5.0mm Angle: 90	
36-427	Makita 957-604-240	**Spark Plug Boot** - NEW Fits Makita DPC6200, DPC6201, DPC6400, DPC6401, DPC6410, DPC6411, DPC7001, DPC7300, DPC7301, DPC7310, DPC7311, DPC7321, DPC8112, DPC9500, DPC9501, DCS6401, DCS642120, DCS7301, & DCS7901 Size: 5.0mm Angle: 90	
36-428	Red Max 505 29 88-01	**Spark Plug Boot** - NEW Fits Red Max 143RII, 226R, 226RJ, 236R, & 532RBS brush cutter Size: 7.0mm Angle: 90	
36-422	Stihl 4128-405-1000	**Spark Plug Boot** - NEW Fits Stihl FS350, 400, 450, & 480 Size: 5.0mm Angle: 45	
33-210		**Spark Plug Boot** Fits most spark plugs Protects plug from moisture Eliminates shock Positive connection	

I

OREGON	Replaces	Description	Product Code

Points & Condenser

33-601	Briggs & Stratton 298185	**Points** Fits 9, 10, 13, 15, & 16 HP horizontal engines 19D, 23D, 233400, 243400, 300400, 320400, 325400, & 326400 series	
33-182-0	Briggs & Stratton 294628	**Ignition Kit** Fits 2-8 HP horizontal & vertical engines in the 60000 to 190000 series Most popular kit for engines (1962–1983)	
33-628	Kohler 47-150-03 Kohler 47-150-01 Kohler 220980	**Points** Fits models K91, 141, 161, 181, 241, 301, 321 341, 361, KT17, KT21, K482, K532, & K582 series Bracket is not included	
33-016	Kohler 230722	**Condenser** Fits 8 HP and larger on all engines with battery coil ignition	
33-606	Tecumseh 30547A John Deere AM30947 Phelon 06230	**Points** Fits 3-10 HP engines LAV, H, HS, V, VH, & VM series Use with Oregon® 33-008 condenser	
33-008	Tecumseh 30548B Clinton 135-24 John Deere AM30949 Phelon 071130	**Condenser** Fits 3-10 HP engines LAV, H, HS, V, & VH series Use with Oregon part 33-606 points	
33-186	Tecumseh 730600 Tecumseh 740037A	**Ignition Kit** Fits 3-10 HP engines LAV, H, HS, V, VH, & VM series Contains 1 each of Oregon 33-606 & 33-008	

Ignition Module

33-053	Universal	**Ignition Module** For most 2-cycle & 4-cycle engines from 21 cc & up (except those with alternator flywheels) & most mower engines Use separate modules for each cylinder in multi-cylinder applications Low RPM operating ability for fast, easy starts with electronic dependability **(Not for battery ignition systems)**	

Ignition Parts

OREGON	Replaces	Description	Product Code	
Flywheel Keys				
02-402	Briggs & Stratton 61760	**Zinc Flywheel Key** For engines with point ignitions		
02-407	Briggs & Stratton 222698 Briggs & Stratton 222698S John Deere PT7211	**Aluminum Flywheel Key** For engines with electronic ignitions		
02-401	Lawn Boy 607199 John Deere 26H10	**Flywheel Key** 5/32" x 5/8" Indent in side holds flywheel key in place on crankshaft For all Lawn Boy 2-cycle lawnmower engines		
02-404	Tecumseh 610961 Tecumseh 27247 John Deere M81575	**Flywheel Key** For point ignitions on older 3 & 3.5 HP engines		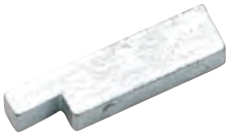
02-406	Tecumseh 610995	**Flywheel Key** For point ignitions on newer 3 & 3.5 HP engines with external coil Silver key		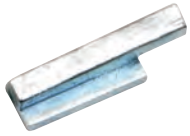
02-403	Tecumseh 611004	**Flywheel Key** For engines with solid state ignition Fits models TVX, TNT, ECV, H30-70, AH600, HSK600, HXL840, SHK840, SHK845, & SHK850 Offset key		
02-405	Tecumseh 611154	**Flywheel Key** For Vector series engines		

I

Can't find what you're looking for?
Try us online to search the latest products available.

OregonProducts.com

OREGON	Replaces	Description	Product Code

The Three-Point Hitch System

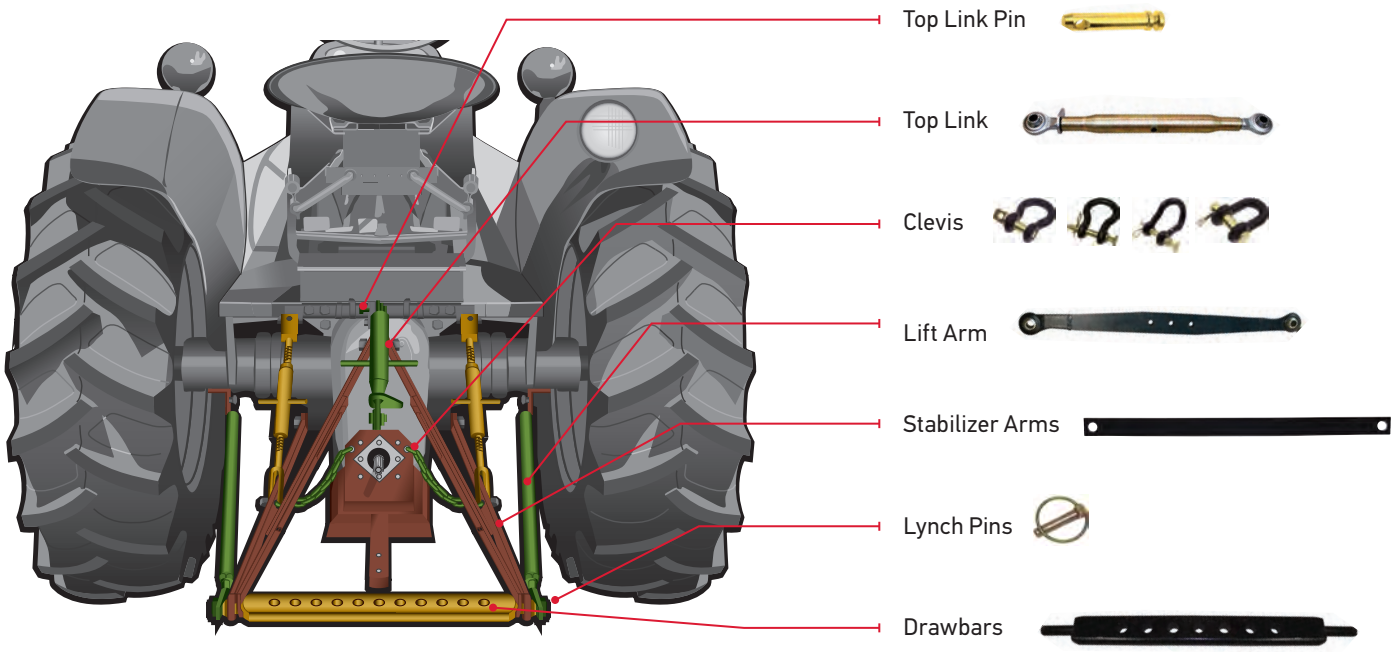

Introduction

A typical tractor three-point hitch system is standard on almost all farm tractors today. The basic function of the system is the attachment and adjustment of agricultural implements. The three primary parts of the system are the top link and two lower lift arms as shown in gold and brown in the illustration above. Special pins are used to fasten the implement at these three points: top link pins and draw pins (lift arm pins). Adjustment of one or all of these components allows the tractor operator to raise, lower or tilt an implement. The three-point linkage parts described in this catalog are built to standard specifications set by the American Society of Argicultural Engineers (ASAE) described in the table on the right.

Category 1, 2, 3, and 4

Categories are used to classify tractors by drawbar horsepower. The table below gives the dimensions and the horsepower ratings that are associated with these three categories.

Maximum Drawbar Horsepower	Top Link Pin Dia.	Pull/Draw Pin Dia.	Stanard Lift Arm Spacing
Cat. 0 - up to 20	5/8"	5/8"	20"
Cat. 1- up to 45	3/4"	7/8"	26"
Cat. 2- 40 to 100	1"	1–1/8"	32"
Cat. 3- 80 to 225	1–1/4"	1–7/16"	38"
Cat. 4- 135 to 300	1–3/4"	2"	46"

Top Link Connection

Top link pins are always unthreaded and are held in place by either a lynch pin, or in some cases, a large “R” clip pin. See below. Top links and top link pins vary in length, but their respective ball socket holes and pin diameters are standardized by horsepower category.

Top Link Connection

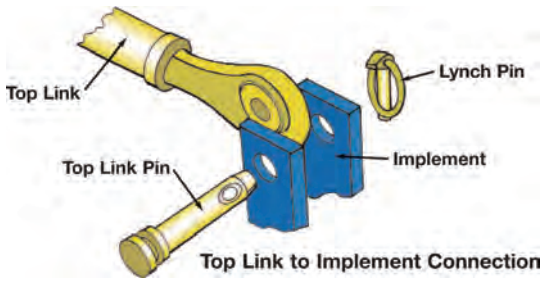

Top Link to Implement Connection

Lift Arm Connection

Most lift arm pins are threaded on the end that bolts to the implement bracket. The unthreaded end with the cross hole accommodates the ball socket of the lift arm. The lift arm is secured on the pin with a lynch pin or large “R” clip pin. See below. Lift arms and lift arm pins vary in length, but their respective ball socket holes and pin diameters are standardized by horsepower category.

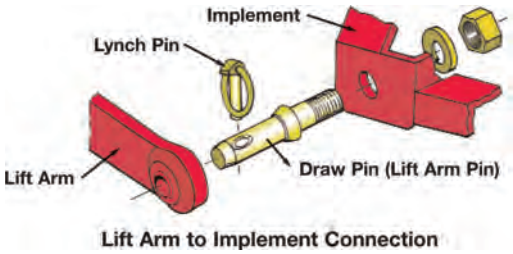

Lift Arm to Implement Connection

Clevises

OREGON	Description	Body Dia.	Clevis Opening	Usable Length	Pin Dia.	Working Load (lbs.)	Product Code
Farm							
03-128	1/2" Farm	1/2"	13/16"	1–15/16"	5/8"	6,500	
03-129	3/8" Farm	3/8"	23/32"	1–7/16"	7/16"	3,000	
03-135	3/4" Farm	3/4"	1–1/4"	3"	7/8"	13,000	
03-136	7/16" Farm	7/16"	3/4"	1–11/16"	1/2"	4,000	
03-156	7/8" Farm	7/8"	1–7/16"	3–1/4"	1"	15,000	
Straight							
03-141	3/4 x 3–3/4" Straight	3/4"	1–5/16"	3–3/4"	5/8"	12,000	
03-145	7/8 x 4–1/4" Straight	7/8"	1–5/16"	4–1/4"	3/4"	16,000	
Twisted							
03-148	3/4 x 3–1/2" Twsted	3/4"	1–5/16"	3–1/2"	5/8"	12,000	
03-150	7/8 x 3–7/8" Twisted	7/8"	1–5/16"	3–7/8"	3/4"	16,000	
Utility							
03-133	5/16" Utility	5/16"	17/32"	1"	3/8"	1,500	
03-154	1/2" Utility	1/2"	13/16"	1–11/16"	5/8"	6,000	

Drawbars

One 3-point hitch cross drawbars to fit Category 0 through Category 3 tractors.

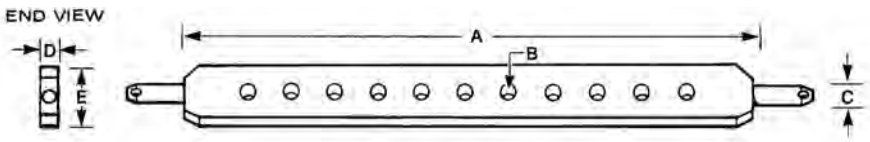

A = Lift Arm Spacing **B** = Hole Diameter **C** = Pin Diameter
D = Thickness **E** = Width

OREGON	Cat.	No. Holes	A	B	C	D	E	Color	Weight (lbs.)	Product Code
03-147	1	11	26"	3/4"	7/8"	1"	2–1/2"	Black	16.4	
03-151	0/1	7	20"	3/4"	7/8"	1"	2–1/2"	Black	13.5	
03-157	2	13	32"	3/4"	1–1/8"	1–1/4"	3"	Black	33.0	

Stabilizer Arms

Stabilizer arms increase the stability of the tractor lift arms.

OREGON	Description	Weight (lbs.)	Product Code
03-155	Right or left universal stabilizer arm; 7/8" pin holes on 31–9/16" centers.	6.0	

Linkage, Jacks, & Hardware

Top Links

Quality forged top links available in Category 0, 1, 1 & 2 combination, 2, and 3 sizes.
All top links are yellow zinc plated unless otherwise specified. The ends are clear zinc plated.

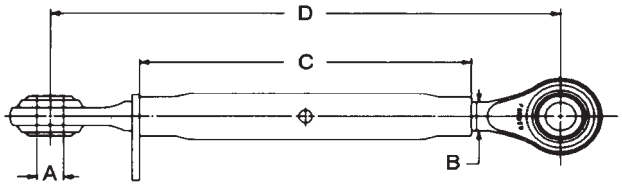

A = Pin Hole Size **B** = Threads **C** = Body Length

OREGON	Category	A	B	C	Closed Length	Open Length	Color	Weight (lbs.)	Product Code
03-143	1	3/4"	1–1/8" NC	16"	21"	31"	Plated	7.6	
03-146	2	1"	1–1/8" NC	16"	21"	31"	Plated	10	

Top Link Pins

Sizes and styles for Category 1 through 2 tractors. Yellow zinc dichromate plated.

OREGON	Cat.	Description	Pin Dia.	Usable Length	Overall Length	Weight (lbs.)	Product Code
03-120	1	Long top link pin; replaces Ferguson 195589M1, AC339942	3/4"	3–7/8"	5–1/2"	0.6	
03-127	1	Replaces Ford 9N-560, Ferguson 195647M1	3/4"	2–3/4"	4–1/2"	0.5	
03-137	2	Replaces Ford C5NN486A	1"	4–3/8"	6"	1.3	
03-142	1	Extra-long top link pin; replaces Ford E381T9	3/4"	4–3/4"	6–3/8"	0.8	

Lift Arm

OREGON	Description	Weight (lbs.)	Product Code
03-153	Category 1 right or left-hand forged lift arm; fits all Ferguson models, Ford 2N, 8N, 9N, and NAA, Massey-Ferguson 35, 50, Oliver 550 and Oliver 3-point conversion, John Deere 1010; 7/8" pin holes; 31–3/4" ball centers; 34–1/2" overall length.	11.7	

Lynch Pins

OREGON	Description	Pin Dia.	Usable Length	Shank Length	Overall Length	Weight (lbs.)	Product Code
03-101	Standard	7/16"	1–1/4"	1–3/4"	2"	0.10	
03-103	Standard	1/4"	1–1/4"	1–3/4"	2–1/8"	0.07	
03-104	Heavy-duty; fits cat. 1, 2, and 3 pins	7/16"	1–1/2"	1–3/4"	2–1/8"	0.13	
03-105	Standard	3/16"	1"	1–3/8"	1–5/8"	0.03	
03-111	Standard	5/16"	1–1/4"	1–3/4"	2–1/8"	0.10	
03-115	Long; fits cat. 1, 2, and 3 pins	7/16"	1–3/4"	2"	2–5/16"	0.14	
03-124	P791 with chain and cotter pin	7/16"	1–1/4"	1–3/4"	2"	0.20	

Locking Pins

Numerous farm, lawn and garden, and industrial applications. Square and round loop style locking pins. Yellow zinc dichromate plated.

OREGON	Dia.	Usable Length	Loop style	Weight (lbs.)	Product Code
03-109	5/16"	2–1/4"	Round	0.10	
03-116	5/16"	2–1/4"	Square	0.10	
03-126	1/4"	1–3/4"	Round	0.06	

Round Loop

Square Loop

R Clip Pins

Available in the most popular sizes for farm and other applications. Yellow zinc dichromate plated spring wire.

OREGON	Wire Dia.	Overall Length	Fits Pin Dia.	Weight (lbs.)	Product Code
03-102	5/32"	2–15/16"	5/8" to 1"	0.04	
03-106	3/16"	3–3/4"	7/8" to 1–1/4"	0.08	
03-108	1/8"	1–15/16"	1/2" to 3/4"	0.02	
03-110	3/32"	1–5/8"	1/4" to 1/2"	0.01	
03-152	5/16"	4–1/8"	1" to 1–7/16"	0.20	

Draw Pins

Forged and adjustable Category 1 through 2 draw pins for a variety of applications. All pins are yellow zinc dichromate plated.

03-107

03-132

03-138

OREGON	Cat.	Description	Pin Dia.	Usable Length	Overall Length	Thread Dia.	Thread Length	Weight (lbs.)	Product Code
03-107	1	Forged; universal	7/8"	1–3/4"	5–1/2"	7/8" NF	1–5/8"	1.1	
03-132	1	Forged; extra long	7/8"	2–1/4"	6–1/2"	7/8" NF	2–1/4"	1.3	
03-138	1 to 2	Forged; to work cat. 1 implements on cat. 2 tractor	1–1/8"	1–13/16"	5–1/4"	7/8" NF	1–5/8"	1.5	

Hitch Pins

Forged head hitch pin with swivel handle and zinc plated "R" clip pin. More than 25% stronger than Grade 2. Yellow zinc dichromate plated.

OREGON	Pin Dia.	Usable Length	Overall Length	Weight (lbs.)	Product Code
03-114	3/4"	6–1/4"	7–3/4"	1.1	
03-117	3/4"	4–1/4"	5–3/4"	0.9	
03-118	5/8"	4–1/4"	5–3/4"	0.6	
03-122	5/8"	6–1/4"	7–3/4"	0.8	
03-125	1"	6–1/4"	7–3/4"	1.9	
03-131	7/8"	6–1/4"	7–3/4"	1.4	
03-140	7/8"	4–1/4"	5–3/4"	1.2	
03-149	1"	4–1/4"	5–3/4"	1.5	

Hitch Pins - Bent

These pins have numerous farm, lawn and garden, and industrial applications. Complete with zinc plated “R” Clip pin. Yellow zinc dichromate plated.

OREGON	Pin Dia.	Usable Length	Weight (lbs.)	Product Code
03-112	1/2"	3"	0.34	
03-113	5/8"	3"	0.50	

Hitch Pins - Red Head

Designed for today’s demanding applications, these one piece, grade 5 performance, forged hitch pins are made from high strength steel and heat treated. Pin has black powder coating with a red vinyl coated head and handle. Zinc plated “R”clip pin included.

OREGON	Pin Dia.	Usable Length	Overall Length	Weight (lbs.)	Product Code
03-100	3/4"	6–1/2"	9–1/2"	1.5	
03-119	7/8"	6–1/2"	9–1/2"	1.9	
03-121	1/2"	3–5/8"	6–5/8"	0.7	
03-123	1"	7–1/2"	10"	2.6	
03-130	5/8"	5–3/4"	9"	1.1	
03-134	3/4"	4"	7"	1.1	
03-139	1–1/8"	8–1/2"	11–1/2"	3.3	
03-144	5/8"	4"	7"	0.9	

Jacks - Topwind

Oregon® jacks include the most popular styles and sizes. The jacks have lift capacities from 2000 lbs. to 5000 lbs. Precision-engineered with smooth turning handle, dependable inner screw and rugged foot plate. Available in several topwind and sidewind styles, with lift heights of 10" & 15".

03-500 **Topwind Jack, Tubular**
Tubular mount, topwind style jack
10" lift height, 2000 lbs. lift capacity, 14.1 lbs.

03-501 **Topwind Jack, Tubular**
Tubular mount, topwind style jack
10" lift height, 5000 lbs. lift capacity, 14.1 lbs.

OREGON | Description | Product Code

Jacks - Topwind

03-503 **Topwind Jack, A–Frame**
A-frame mount, topwind style jack
15" lift height, 5000 lbs. lift capacity, 13.7 lbs.

03-504 **Topwind Jack, Tubular**
Tubular mount, topwind style jack
15" lift height, 5000 lbs. lift capacity, 19.8 lbs.

03-506 **Topwind Jack, Flange**
Flange (weld) mount, topwind style jack
10" lift height, 5000 lbs. lift capacity, 16.4 lbs.

Jacks - Sidewind

03-502 **Sidewind Jack, Tubular**
Tubular mount, sidewind style jack
15" lift height, 5000 lbs. lift capacity, 19.8 lbs.

OREGON | Description | Product Code

Jacks - Sidewind

03-507 **Sidewind Jack, Tubular**
Tubular mount, sidewind style jack
10" lift height, 5000 lbs. lift capacity, 16.9 lbs.

03-508 **Sidewind Jack, Flange**
Flange (weld) mount, sidewind style jack
10" lift height, 2000 lbs. lift capacity, 16.9 lbs.

03-505 **Sidewind Jack, Flange, Wheeled**
Flange (weld) mount, sidewind style jack, wheeled
10" lift height, 1000 lbs. lift capacity

Display Packs

Clevis Pins

OREGON	Description	Qty.	Bagged	Clamshell	Product Code
03-320	**Clevis Pins, Assortment Kit**	**50**		✓	
	1/4" X 1–1/2" Clevis Pin	4			
	1/4" X 2–1/4" Clevis Pin	4			
	1/4" X 1–1/4" Clevis Pin	4			
	1/4" X 1–5/8" Clevis Pin	4			
	1/4" X 1–3/4" Clevis Pin	4			
	1/4" X 1–7/8" Clevis Pin	4			
	1/4" X 2" Clevis Pin	4			
	1/4" X 2–1/2" Clevis Pin	4			
	5/16" X 1–5/8" Clevis Pin	1			
	5/16" X 1–3/4" Clevis Pin	2			
	5/16" X 1–7/8" Clevis Pin	2			
	5/16" X 2" Clevis Pin	2			
	5/16" X 2–1/4" Clevis Pin	2			
	5/16" X 2–1/2" Clevis Pin	1			
	5/16" X 2–5/8" Clevis Pin	1			
	5/16" X 2–3/4" Clevis Pin	2			
	5/16" X 2–7/8" Clevis Pin	1			
	5/16" X 3" Clevis Pin	1			
	3/8" X 1–7/8" Clevis Pin	1			
	3/8" X 2" Clevis Pin	1			
	3/8" X 2–1/4" Clevis Pin	1			

Clevis Pins

Cotter Pins

03-301	**Cotter Pins, Assortment Kit**	**420**		✓	
	1/16" x 1" Straight Cotter Pin	100			
	3/32" x 1" Straight Cotter Pin	100			
	1/8" x 1" Straight Cotter Pin	100			
	1/8" x 1–1/2" Straight Cotter Pin	60			
	5/32" x 1–1/2" Straight Cotter Pin	40			
	3/16" x 2" Straight Cotter Pin	20			
03-305	**Straight Cotter Pins, Assortment Kit**	**26**	✓		
	1/16" X 5/8" Straight Cotter Pin	2			
	3/32" X 1–1/2" Straight Cotter Pin	2			
	1/8" X 1" Straight Cotter Pin	2			
	1/8" X 1–1/2" Straight Cotter Pin	2			
	5/32" X 1" Straight Cotter Pin	2			
	5/32" X 2" Straight Cotter Pin	2			
	3/16" X 1" Straight Cotter Pin	2			
	3/16" X 2" Straight Cotter Pin	2			
	1/4" X 1–1/4" Straight Cotter Pin	2			
	1/4" X 1–1/2" Straight Cotter Pin	2			
	1/4" X 2–1/2" Straight Cotter Pin	2			
	5/16" X 2" Straight Cotter Pin	2			
	3/8" X 2–1/2" Straight Cotter Pin	2			

Cotter Pins

E–Rings

03-312	**E-ring Clips, Assortment Kit**	**90**	✓		
	1/16" E-Ring Clip	10			
	1/8" E-Ring Clip	20			
	3/16" E-Ring Clip	10			
	1/4" E-Ring Clip	20			
	3/8" E-Ring Clip	10			
	1/2" E-Ring Clip	10			
	5/8" E-Ring Clip	5			
	3/4" E-Ring Clip	5			

E-Rings

L

Display Packs

OREGON	Description	Qty.	Bagged	Clamshell	Product Code
Grease Fittings					
03-321	**Grease Fittings, Assortment Kit**	**8**	✓		
	1/4" - 28 Straight 45 Degree Grease Zerk	2			
	1/4" - 28 Straight 90 Degree Grease Zerk	2			
	1/4" - 28 Straight Grease Zerk	4			
Hair Pins					
03-317	**Hairpin Cotter Pins, 1/2" to 5/8"**	**2**	✓		
03-318	**Hairpin Cotter Pins, 3/8" to 1/2"**	**2**	✓		
03-319	**Hairpin Cotter Pin, 7/8" to 1–1/4"**	**1**	✓		
03-324	**Hairpin Cotter Pins, 5/16" to 3/8"**	**5**	✓		
03-326	**Hairpin Cotter Pins, 3/4" to 1"**	**2**	✓		
03-314	**Hairpin Cotter Pins, 5/8" to 7/8"**	**2**	✓		
03-306	**Hairpin Cotter Pins, Assortment Kit**	**130**		✓	
	0.04" Wire OD, 1/8–3/16" Pin	20			
	0.058" Wire OD, 3/16–1/4" Pin	20			
	1/16" Wire OD, 5/16–3/8" Pin	20			
	3/32" Wire OD, 3/8–1/2" Pin	20			
	1/8" Wire OD,1/2–5/8" Pin	20			
	5/32" Wire OD, 5/8–7/8" Pin	20			
	3/16" Wire OD, 7/8 - 1.25" Pin	10			
03-322	**Hairpin Cotter Pins, Assortment Kit**	**16**	✓		
	5/32" Wire OD, 5/8–7/8" Pin	4			
	1/8" Wire OD, 1/2–5/8" Pin	4			
	3/32" Wire OD, 3/8–1/2" Pin	4			
	1/16" Wire OD, 5/16–3/8" Pin	4			
Lock Pins					
03-300	**Lock Pin - Round, 5/16" x 1–3/4"**	**1**	✓		
03-304	**Lock Pin - Round, 1/4" x 1–3/4"**	**1**	✓		
03-309	**Lock Pin - Square, 1/4" x 2–1/2"**	**1**	✓		
03-316	**Lock Pin - Square, 5/16" x 3–1/4"**	**1**	✓		
03-325	**Lock Pins, Assortment Kit**	**3**	✓		
	1/4" X 1–3/4" Lock Pin - Round	1			
	3/8" X 1–3/4" Lock Pin - Round	1			
	5/16" X 1–3/4" Lock Pin - Round	1			

Grease Fittings

Hair Pins

Lock Pins

Display Packs

Machinery Key Assortment

OREGON	Description	Qty.	Bagged	Clamshell	Product Code
03-310	**Machinery Keys, Assortment Kit**	**70**			
	1/8" Sq. x 1–1/2" Square Key Stock	20			
	3/16" Sq. x 1–1/2" Square Key Stock	12			
	3/16" X 1/4" x 1–1/2" Key Stock	12		✓	
	1/4" Sq. x 1–1/2" Square Key Stock	10			
	5/16" Sq. x 1–1/2" Square Key Stock	8			
	3/8" Sq. x 1–1/2" Square Key Stock	8			

Machinery Keys

Shaft Collars

03-328	**Shaft Collars, 1" ID**	**2**	✓		

Shaft Collars

Spring Pin Assortments

03-307	**Spring Pins, Assortment Kit**	**170**			
	1/8" X 1" Spring Pin	50			
	1/8" X 1–1/2" Spring Pin	30			
	3/16" X 1" Spring Pin	25		✓	
	3/16" 1–1/2" Spring Pin	25			
	1/4" X 1–1/4" Spring Pin	25			
	1/4" X 1–1/2" Spring Pin	15			
03-313	**Spring Pins, Assortment Kit**	**45**			
	1/8" X 1" Spring Pin	5			
	1/8" X 1–1/2" Spring Pin	5			
	5/32" X 3/4" Spring Pin	3			
	5/32" X 1" Spring Pin	3			
	3/16" X 1/2" Spring Pin	5			
	3/16" X 3/4" Spring Pin	3			
	3/16" X 1" Spring Pin	3			
	3/16" 1–1/2" Spring Pin	3	✓		
	1/4" X 1–1/2" Spring Pin	2			
	1/4" X 2" Spring Pin	2			
	5/16" X 1–3/8" Spring Pin	2			
	5/16" X 1–1/2" Spring Pin	2			
	5/16" X 2–1/2" Spring Pin	2			
	3/8" X 1–1/2" Spring Pin	1			
	3/8" X 2–1/2" Spring Pin	1			

Spring Pins

Woodruff Key Assortment

03-311	**Woodruff Keys, Assortment Kit**	**30**			
	#3, 1/8" X 1/2" (404) Woodruff Key	10			
	1/8" X 5/8" (405) Woodruff Key	8			
	#9, 3/16" X 3/4" (606) Woodruff Key	4	✓		
	3/16" X 7/8" (607) Woodruff Key	4			
	#15, 1/4" X 1" (808) Woodruff Key	4			

Woodruff Keys

L

Miscellaneous Parts

OREGON	Replaces	Description	Product Code

Belt Guard

76-020	MTD 17664-0637	**Belt Guard – Spindle Assembly** For 42" side-discharge decks and deck "G" Use with Oregon® 82-500	

Blade Brake Assemblies

82-100	MTD 761-0168	**Blade Brake** Fits 400-series shallow deck 38" cut & 130–498 series tractors	

Knobs & Handle Accessories

81-013	532183724 170146 136376	**Handle Knob Kit**	
81-015	Honda 53125-VA4-K10 Code 3338076	**Handle Knob** 8 mm, 5-star handle For walk-behind mowers	
81-012	MTD 720-0241	**Handle Knob** 5/16-18 threads	
79-000	Universal	**Fix-a-Handle** Flat for lower handles For 7/8" tubing Repairs broken handles	
73-836	Toro 100-3298-03	**Latch-Handle, LH** For Recycler mowers	
73-837	Toro 100-3297-03	**Latch-Handle, RH** For Recycler mowers	

Linchpins

02-443	AMF 1501-901 Bobcat 64173-05 Bolens 1719762 Exmark 809006 Kees 903798 Snapper 76967	**Linchpin** Pin dia.: 3/16" Pin length: 1-1/2" under head	

M

OREGON	Replaces	Description	Product Code	

Linchpins

02-444	MTD 714-0143 Noma 73842	**Linchpin** Pin dia.: 1/4" Pin length: 1-3/4" under head Zinc plated	
02-445	Bobcat 64173-01	**Linchpin** Pin dia.: 5/16" Pin length: 1-3/4" Ring dia.: 1-3/8" "D" shaft style	
02-446	Scag 04066-01 Bobcat 64173-04 Encore 109020 Exmark 809020 Ferris 1520655 Toro 3290-384	**Linchpin** Pin dia.: 7/16" Pin length: 1-3/4" Ring dia.: 1-3/8" Use with Oregon® 48-202 "D" shaft style	
02-442	Universal	**Hitch Pin** Shank dia.: 1/2" Usable space: 3-1/2" For lawn & garden tractors using 3-point lift system or draw bars	
08-423		**Linchpin Assortment** Total pieces: 50 3/16" x 1-1/2": 16 3/4" x 1-3/4": 18 5/16" x 1-3/4": 6 7/16" x 1-3/4": 10	

Lock Assemblies for Tractor Hoods

42-555	AYP 160793	**Latch Assembly with Hook** For 42" and 46" decks Use 2 per deck to hold mulching cover plate & rubber strap Overall length: 4-3/4"	
42-557	MTD 723-0383	**Grass Bag Retainer Strap** Fits 400-series riders (1995 & newer) For riding mowers and lawn tractors. Attaches to discharge tube to bagger & mower deck Rubber strap length: 6", overall length: 7", width: 7/8"	

Mower Cover

81-020	Universal	**Mower Cover** 68" x 40" x 38"	

M

Miscellaneous Parts

OREGON	Replaces	Description	Product Code

Mower Deck Suspension

76-015	AYP 139868	**Rear Suspension Arm** For mower deck lift on lawn tractors with 38", 42", 44", 46", & 50" decks Length: 11-1/2", width: 1-1/8" (2) 1/2" center holes on 10-1/2" centers	
76-031	AYP 175689	**Trunnion Mower Deck Lift** For lawn tractors with 38", 42", 44", 46", & 50" decks Hole: 1/2", pin: 1/2"	
45-145	532151141 151141	**Lift Link — Left Hand** For mower deck lift	
45-146	532151140 151140	**Lift Link — Right Hand** For mower deck lift	

Rod End Bearings

45-300	Universal Country Clipper H1885 Bobcat 128079	**Rod End Bearing** Right-hand thread: 1/4-28 Bore dia.: 1/4"	
45-305	Universal	**Rod End Bearing** Right-hand thread: 5/16-24 Bore dia.: 5/16"	
45-301	Universal Encore 453081	**Rod End Bearing** Right-hand thread: 5/16-24 Bore dia.: 5/16"	
45-302	Universal Scag 48464 John Deere AM120124 Bobcat 138011	**Rod End Bearing** Right-hand thread: 3/8-24 Bore dia.: 3/8"	
45-306	Universal	**Rod End Bearing** Right-hand thread: 3/8-24 Bore dia.: 3/8"	
45-303	Gravely 44941 John Deere AM103052	**Rod End Bearing** Right-hand thread: 1/2-20 Bore dia.: 1/2"	

M

Seal Boots

OREGON	Replaces	Description	Product Code
81-102	Snapper 1-1011 Snapper 1-7083	**Seal Boot — Short** Length: 8" For rear-engine riders with 1-3/4" hub	

Yokes

OREGON	Replaces	Description	Product Code
06-003	Dixie Chopper 20214 Bobcat 38020 Exmark 303105 Grasshopper 265537	**Adjustable Yoke** Female thread size: 5/16-24 For 5/16" pin	

OREGON	Replaces	Description	Product Code
06-004	Exmark 633131 John Deere M80373 Grasshopper 265545 Noma 305530	**Adjustable Yoke** Female thread size: 3/8-24 For 3/8" pin	

Shoulder Bolts

OREGON	Replaces	Description	Product Code
04-163	John Deere M8469, M90937	Shoulder Bolt 1/2" x 2-1/2"	

- Use on 38" deck & front wheels on 46" deck
- Use with Oregon® 72-094 deck wheel

04-151	Lawn Boy 603441	Shoulder Bolt Kit	

- Shoulder length: 1-17/32"
- Overall length: 1-31/32"
- Thread run: 3/8-16

48-011	Exmark 513547 Toro 99-2842	Shoulder Bolt Kit	

- Deck wheel bolt for Lazer Z models

Handle Bolts

OREGON	Replaces	Description	Product Code
02-050-0	Snapper 9-1013	Handle Bolt	

- Curved head
- 5/16-18 thread
- Use with Oregon 81-010 tightening knob

Bar Stud Nut

04-009	Stihl 000-955	Bar Stud Nut	

- 8 mm x 1.25
- Fits 028A, 031AV, 034AV, 042AV & 045AV

M

Mufflers

OREGON	Replaces	Description	Product Code	

Briggs & Stratton

35-001	89966	**Muffler** 1/2" pipe thread For 2, 3, & 4 HP engines Fits 60000, 80000, 92000, & 110900 series Use with Oregon® 02-128 locknut Length: 4-3/4", OD: 1-1/2"		
35-007	89966	**Muffler** 1/2" pipe thread Economy version of Oregon 35-001 Light-weight Length: 4-3/4", OD: 1-1/2" Use with Oregon 02-128 locknut		
35-002	298830 394569S	**Muffler** 1/2" pipe thread For 3, 3-1/2, & 4 HP engines Fits 92500, 92900, & 110900 series Length: 2-1/2", OD: 2-5/8"		
35-023	391435 394569 394569S 298830	**Muffler** OEM style For 3-1/2 & 4 HP engines Painted gray, brass welds Length: 2-3/4", OD: 3"		
35-004	297274 297506 494585 493936	**Muffler** Bolt-on style For 4 & 5 HP engines Fits 100200, 100900, 130200, & 130900 series Length: 4", width: 3-5/8", thickness: 1-1/2" Center-to-center: 1-1/2"		
35-005	294599 294599S	**Muffler** 3/4" pipe thread For 5, 7, & 8 HP engines Fits 130200, 130900, 170700, 190700, 170499, & 190400 series Use with Oregon 02-130 locknut Length: 6-1/4", OD: 2-3/8"		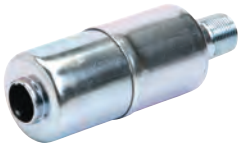
35-012	393010 393010S	**Muffler** Super low tone 3/4" pipe thread For 7 & 8 HP engines Fits 170400, 170700, 190400, & 190700 series Use with Oregon 02-130 locknut Length: 5-3/8", OD: 3-1/8"		
35-014	391313 692304	**Muffler** Bolt-on type, super low tone For 5, 7, & 8 HP engines Fits 100000, 130200, 130900, 170400, 170700, 190400, & 190700 series Length: 4-1/2", width: 4-1/4", thickness: 2-3/4" 1-9/16" center-to-center		

M

OREGON	Replaces	Description	Product Code	
Briggs & Stratton				
35-026	299477 299477S 391569 391569S	**Muffler** For 10 & 11 HP engines Pipe length: 4-3/4", NPT: 1" Use with Oregon® 02-129 locknut		
35-022	394180 491413 394170 691874	**Muffler** For 10 & 11 HP engines Fits 220400, 220700, 251400, 252400, 251700, & 252700 series Length: 5", width: 4-1/2", thickness: 3-1/2" Center-to-center: 1-7/8"		
35-027	496106 496106S 490547	**Muffler** Quantum super low tone		
35-006	392989	**Muffler** 1" pipe thread Length: 3-1/4", OD: 4-1/2"		
Gravely				
35-543	18543	**Muffler** For all four wheel tractors Length: 8-1/4", diameter: 3-3/4", Inlet: 1-5/16"		
Honda				
35-034	18310-ZE2-W00	**Muffler** For 8 HP engine Fits GX240 series engines Shield NOT included		
35-036	18310-ZE2-W61 Code 6145353	**Muffler** Fits GX340 & GX390 series engine Includes shield		

M

Mufflers

OREGON	Replaces	Description	Product Code	
Honda				
35-038	18310-ZF1-000 Code 3683703	**Muffler** Fits GX160 series engine Includes shield		
35-037	18310-ZM0-000	**Muffler** Fits GCV135 & GVC160 series engines Shield NOT included		
35-041	18320-ZF1-H01 Code 4644811	**Muffler Shield** Fits GXV160 series engine		
35-043	18320-ZE2-W61 Code 4684098	**Muffler Shield** Fits GX240 series engine		
35-044	18320-ZE3-W01 Code 4640843	**Muffler Shield** Fits GX340 & GX390 series engines		
35-045	18330-ZH9-N00 Code 3682036	**Muffler Pipe** Fits GX240, GX340, & GX390 series engines		
Kohler				
35-006	275679 275679S 236649	**Muffler** 1" pipe thread Fits K241 to K321 & K532 to K582 Length: 3-1/4", OD: 4-1/2"		
35-008	220521 220521S A220521	**Muffler** 3/4" pipe thread Adaptable to any 3/4" pipe For 4 HP engines Fits K90 & K91 series		

M

OREGON	Replaces	Description	Product Code

Murray

35-010	23343 23483 023342	**Muffler** For 11 HP tractor Pipe extension: 7", length: 10" NPT: 1", diameter: 4-1/2" Use with Oregon® 02-129 locknut	

Snapper

35-016	1-8198	**Muffler** For Snapper riders with Briggs & Stratton engine using header pipes Length: 5", width: 3-3/8", thickness: 2-1/8" Use with Oregon 35-903 exhaust pipe	
35-033	5-1996	**Muffler** For Snapper riders with 12 & 12.5 HP Briggs & Stratton engines Overall length: 12" OD pipe: 1", OD muffler: 5"	
35-050	7-4453	**Muffler** Fits Yard Cruisers with 14.5 HP engine	

Tecumseh

35-006	32043B	**Muffler** 1" pipe thread Fits OH160-180 engines Length: 3-1/4" OD: 4-1/2"	
35-003	27181B 27181C 27181A	**Muffler** For 2-1/2–3-1/2 HP engines Fits ECH90, ECV100, H22, H25, H30, H35, LAV22, LAV25, LAV35, LAV40, LAV50, TVS75, TVS90, TVS105, & TVS120 series Length: 2", OD: 2-1/4", center-to-center: 1-3/8" Bolts & gasket included	
35-032	35771 35771A 32648A 33697A0	**Muffler** For 4–7 HP engines Fits HS40, LAV40, HS50, & LAV50 series	

M

Mufflers

OREGON	Replaces	Description	Product Code

Tecumseh

35-008	29633	**Muffler** 3/4" pipe thread For 6, 7, & 8 HP engines Fits H60, H70, V60, V70, HM80, & VM80 series	
35-028	32401	**Muffler** For Snow King engines with 4–7 HP horizontal engines Fits H40 to H70, V50, V60, & V70	
35-015	33280 33280A 34185B	**Muffler** Bolt-on type For 7–10 HP engines Fits HM70, VM70, HM80, VM80, HM100, VM100, TVM170 to TVM220 series Length: 5-3/4", width: 4-3/4", height: 2-5/8" Center-to-center: 1-1/2"	

Toro / Wheel Horse

35-021	110771 110774 Murray 90330PA Murray 90330SE AMF/Noma 54765/54766 Roper 101273	**Muffler** For LTV series OD: 4-1/2", thickness: 3" Bolts & heat shield included	

Wisconsin

35-006	WD66AS2	**Muffler** Adaptable to any 1" pipe Fits AEH, AEN, AENLD, AGN, AHH, S10D, S12D, & S14D Diameter: 4-3/4", thickness: 3-1/4", pipe thread: 1"	

Can't find what you're looking for?
Try us online to search the latest products available.

OregonProducts.com

Notes

SECTIONS O–S

Oil Filters . . . . . LG 812–820

Pulleys . . . . . LG 821–841

Seats . . . . . LG 842–845

Snow Thrower Parts . . . . . LG 846–863

Spark Plugs . . . . . LG 864–868

Spindles . . . . . LG 869–910

Sprayers . . . . . LG 911–912

Springs. . . . . LG 913–914

Starters, Starter Parts, and
Starter Rope . . . . . LG 915–937

Steering Parts . . . . . LG 938–941

Switches . . . . . LG 942–951

Oil Filters

Metal Shell

Relief Valve Assembly
Relief valve opens when necessary to provide engine with oil under all conditions

Perforated Steel Core
Allows full flow while giving rigid support

Anti-Drain Back Valve
Anti-drain back valve prevents oil from draining out of the filter during engine shutdown

Metal End Cap
Metal end caps and thermo setting adhesive provide positive seals

Resin Impregnated
Paper filter medium
Cured resin impregnated paper removes harmful foreign particle

Metal End Cap
Metal end caps and thermo setting adhesive provide positive seals

Lid Assembly
Lid assembly is roll seamed to the shell which provides a leak-tight assembly

Engine Oil Filters

OREGON	Replaces	Description	Product Code
83-283	Briggs & Stratton 491056	**Oil Filter** HT: 3-1/8", OD: 3", seal OD: 2-13/16" Mounting thread: 3/4"-16 Micron: 27, relief pressure: 8–11 PSI Anti-drain back valve: yes	
83-403		**Shop Pack** - 12 of 83-283	
83-503		**Bulk Pack** - 48 of 83-283	
83-285	Briggs & Stratton 692513	**Oil Filter** For 6.5 HP Intek Pro model engines Fits 122600 & 123600 HT: 2-7/8", OD: 2-5/8", seal OD: 2-3/8" Mounting thread: 3/4"-16 Micron: 27, Relief pressure: 8–11 PSI Anti-drain back valve: yes	
83-013	Briggs & Stratton 492932 Briggs & Stratton 492932S	**Oil Filter** For Vanguard engines 5 thru 14 HP HT: 2-1/4", OD: 3", seal OD: 2-13/16" Mounting thread: 3/4"-16 Micron: 27, relief pressure: 8–11 PSI Anti-drain back valve: yes	
83-401		**Shop Pack** - 12 of 83-013	
83-501		**Bulk Pack** - 48 of 83-013	
69-281		**Clamshell** - 1 of 83-013	

OREGON	Replaces	Description	Product Code

Engine Oil Filters

83-280
Briggs & Stratton 5076D
Briggs & Stratton 695396
Briggs & Stratton 696854

Oil Filter
Extended life version of 492932 (Oregon 83-013)
HT: 2-1/4", OD: 3", seal OD: 2-13/16"
Mounting thread: 3/4"-16, micron: 27
Relief pressure: 8–11 PSI, anti-drain back valve: yes

83-030
Briggs & Stratton 795990

Oil Filter
Fits 121Q72, 121S72, 121S75, 121S77, 12Q972, 12S972, & 12S975
HT: 2-3/8", OD: 2", seal OD: 1-3/4"

83-029
Generac 070185D

Oil Filter
For Generac engines.
HT: 2-7/8", OD: 2-5/8", seal OD: 2-7/8"
Mounting thread: 3/4"-16
Micron: 27, relief pressure: 8–11 PSI
Anti-drain back valve: yes

83-000
Honda 15400-PFB-014
Honda 15400-PFB-004
Honda 15400-PJ7-015
Honda 15400-PM3-004

Oil Filter
For many Honda water-cooled engines
HT: 2-1/2", OD: 2-1/2", seal OD: 2-13/16"
Mounting thread: M20 x 1.5
Micron: 27, relief pressure: 8–11 PSI
Anti-drain back valve: yes

Oil Filters

OREGON	Replaces	Description	Product Code

Engine Oil Filters

83-301

Honda 15410-MJO-405
Honda 15400-679-023
Honda 15400-POH-305
Honda 15410-MJO-004
John Deere AM100750
John Deere AM101378
John Deere M806418
Kubota 70000-15241
Troy Bilt 1874139
Yanmar 129150-35150

Oil Filter
Fits model GX60K1
For water-cooled engines on tractor models 3813 & 4514
HT: 2-7/8", OD: 3-1/8", seal OD: 2-1/2"
Mounting thread: M20 x 1.5
Micron: 27, relief pressure: 11–14 PSI
Anti-drain back valve: yes

83-302

Honda 15400-PLM-A01PE
Honda 15400-ZJ1-004

Oil Filter
Fits GX610, GX620, GXV340, GXC390, GXV630, GXV660, GXV670, GXV690, & BF marine engines, EB12 gen sets & H6522 compact tractors.
HT: 3-3/8", OD: 2-11/16", mounting thread: 20 mm x 1.5 mm
Micron: 27

83-001

Honda 15410-MFJ-D01

Oil Filter - NEW
Fits Bobcat 453 & 463 skid steer loaders, MT50, MT52, & MT55 mini-track loaders, 319, 320D, 321, 322, 323, 324, 418, E08, E10, E14, & E16 compact excavators, 2200 & 2300 utility vehicles; Caterpillar 300.9D, 301.4C, 301.7D, 302.2D, 302.4D, & 302.7D; Ditchwitch MX9, MX15, & MX27; Hitachi Zaxis 8, ZX17U-2, ZX8-2, JLG400CRT, 330CRT, & 260MRT; John Deere 322, 330, 332, 355D, 430, & 455 diesels, 655, 755, 756, 855, & 856 tractors, 1420, 1435, F735, F912, F915, F925, F932, F935, GX355, X495, X595, X740, X744, X748, X749, & HPX diesel Gators, 2500 & 2500A diesel Tri-Plex greens mowers, 2500B & 2500E hybrid diesel riding greens mowers, 2243, 2653, & 2653A diesel professional utility mowers, 2653B, 2020, 2020A, 2030, & 2030A Pro Gators; Kubota 316, 463, B7300, B7400, B7410, BX1500, BX1800, BX1830, BX1850, BX1860, BX1880, BX2230, BX2350, BX2360, BX2370, BX2380, BX23, BX24, BX25, G1800, G1900, G2000, G2160, G3200, GF1800, GF1800E, GR2100, GR2120, KX41-3, PC09, RTV500, & RTV900,
Height: 2-1/2", outer diameter: 2-5/8", thread: 20mm x 1.5mm
Microns: 20

Can't find what you're looking for?
Try us online to search the latest products available.

OregonProducts.com

OREGON	Replaces	Description	Product Code

Engine Oil Filters

83-282	Kawasaki 49065-2074 Kawasaki 49065-2078 Kawasaki 49065-2071 Kawasaki 49065-2070 Kawasaki 49065-2057 Kawasaki 49065-7010 Club Car 41016-67 Club Car 1016467 Cushman 833438 EZGO 607454 John Deere AM101054 John Deere AM107423 Onan 122-0737 Snapper 7-7355 Toro NN10684 Woods 72859	**Oil Filter** New smaller OEM version Replaces filter on most Kawasaki engines HT: 2-7/8", OD: 2-3/4", seal OD: 2-3/4" Mounting thread: 3/4"–16 Micron: 28, relief pressure: 8–11 PSI Anti-drain back valve: yes	
83-402		**Shop Pack** - 12 of 83-282	
83-502		**Bulk Pack** - 48 of 83-282	
69-282		**Clamshell** - 1 of 83-282	
83-013	Kawasaki 49065-7007	**Oil Filter** Fits models FR541V, FR600V, FR651V, FR691V, FR730V, FS481V, FS541V, FS600V, FS651V, FS691V, FS730V, FX481V, FX541V, FX600V, FX651V, FX691V, & FX730V HT: 2-1/4", OD: 3", seal OD: 2-13/16", mounting thread: 3/4"-16 Micron: 27, relief pressure: 8–11 PSI, anti-drain back valve: yes	
83-401		**Shop Pack** - 12 of 83-013	
83-501		**Bulk Pack** - 48 of 83-013	
69-281		**Clamshell** - 1 of 83-013	
83-013	Kohler 28 050 01-S	**Oil Filter** HT: 2-1/4", OD: 3", seal OD: 2-13/16" Mounting thread: 3/4"-16 Micron: 27, relief pressure: 8–11 PSI Anti-drain back valve: yes	
83-401		**Shop Pack** - 12 of 83-013	
83-501		**Bulk Pack** - 48 of 83-013	
83-028	Kohler 277233 John Deere AM39687	**Oil Filter** Fits models K482, K532, & K582 HT: 4-1/2", OD: 3", seal OD: 2-7 Mounting thread: 3/4"-16 Micron: 28, relief pressure: 8–11 PSI Anti-drain back valve: yes	

Oil Filters

OREGON	Replaces	Description	Product Code

Engine Oil Filters

83-283	Kohler 52 050 02-S	**Oil Filter** For twin-cylinder KT & Magnum engines Fits CH/DV 18-26/730-7445 PRO, LV625-675, LH630-760, CH11-15 PRO, & CV13-15/493 PRO HT: 3-1/8", OD: 3", seal OD: 2-13/16" Mounting thread: 3/4"-16 Micron: 27, relief pressure: 8–11 PSI Anti-drain back valve: yes	
83-403		**Shop Pack** - 12 of 83-283	
83-503		**Bulk Pack** - 48 of 83-283	
83-284	Kohler 12 050 01-S Bad Boy 063-5400-00 John Deere AM125424 John Deere KH1205008 John Deere GY20577 Woods 70820	**Oil Filter** HT: 2-5/8", OD: 3", seal OD: 2-13/16" Mounting thread: 3/4"-16 Micron: 27, relief pressure: 8–11 PSI Anti-drain back valve: yes	
83-404		**Shop Pack** - 12 of 83-284	
83-013	Tecumseh 36262 Tecumseh 36563 Tecumseh 36961	**Oil Filter** Fits OHV 115-170 HT: 2-1/4", OD: 3", seal OD: 2-13/16" Mounting thread: 3/4"-16 Micron: 27, relief pressure: 8–11 PSI Anti-drain back valve: yes	
83-401		**Shop Pack** - 12 of 83-013	
83-501		**Bulk Pack** - 48 of 83-013	
83-283	Onan 122-0645 Case C26191 John Deere AM101207 Toro NN10147 Wheel Horse NN10147 Woods 70939	**Oil Filter** Fits Onan engine models B43, B48, P216 P216, 218, 200, & 600 For twin-cylinder KT & Magnum series engines HT: 3-1/8", OD: 3", seal OD: 2-13/16" Mounting thread: 3/4"-16 Micron: 27, relief pressure: 8–11 PSI Anti-drain back valve, yes	
83-403		**Shop Pack** - 12 of 83-283	
83-503		**Bulk Pack** - 48 of 83-283	

OREGON	Replaces	Description	Product Code

Hydraulic / Transmission Filters

83-014 — MTD 723-0405

Hydraulic Oil Filter
For MTD log splitters
HT: 5-1/4", OD: 3-3/4"
Mounting thread: 1"-12
Micron: 10

83-011 — Scag 48757
Encore 453058
Cushman 834702
Deweze 520403
Hustler 783936
Ferris-Snapper 502 1357x1

Transmission Oil Filter
For commercial mowers
Steiner, Bobcat, & Land Pride
HT: 5-1/4", OD: 3-11/16", seal OD: 2-3/4"
Mounting thread: 1"-12, micron: 10

83-012 — Toro 67-8110
Scag 48462-01
Snapper 2-7164

Transmission Oil Filter
For Groundsmaster 300 series commercial mowers &
Pro Line commercial mowers
HT: 5-1/4", OD: 3-11/16", seal OD: 2-3/4"
Mounting thread: 1"-12
Micron: 10

83-300 — Ariens 31928
Bolens 1719859/1726450
Cub Cadet 395789-R2
Cub Cadet 723-3014
Cushman 111836
Gravely 39306
Howard Price 6033
John Deere AM-35176
John Deere AM39653
MTD 727-0162
Onan 122-0185
Simplicity 171439/1650954
Troy Bilt 1719859
Troy Bilt 1726450
Wheel Horse 108335

Transmission Oil Filter
For many brands with hydro-static transmissions
HT: 3-3/4", OD: 3-13/16", seal OD: 2-13/16"
Mounting thread: 3/4"-16
Micron: 28

83-010 — Dixie Chopper 60105
Dixon 5565
Encore 423063
Exmark 513211
Honda 25641-ZE4-003
Ingersoll C33445
Kees 101164
Kees 102606
Hustler 768341

Transmission Oil Filter
For Quinstar and Zipper mowers
HT: 3-7/8", OD: 3", seal OD: 2-3/4"
Mounting thread: 3/4"-16
Micron: 10

83-400 — **Shop Pack** - 12 of 83-010

Oil Filters

OREGON	Replaces	Description	Product Code

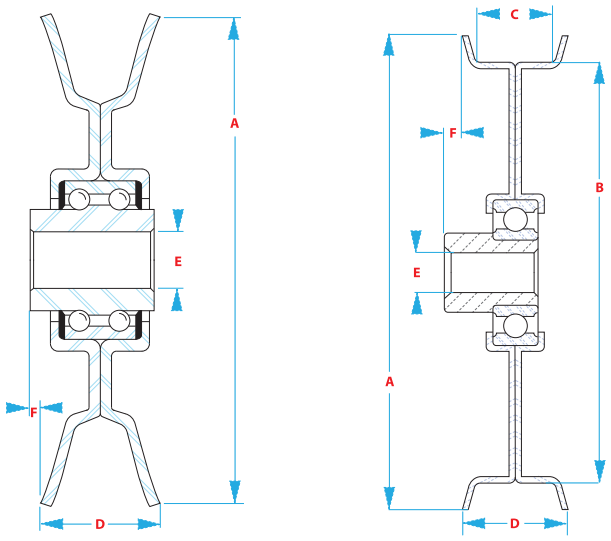

OREGON	OD: (A)	Flat OD: (B)	Flat Width (C)	Overall Width (D)	Bore: (E)	Offset: (F)	Material	Product Code
Flat Idler Pulleys – No Flanges								
34-027	2-1/4	2-1/4	1-1/4	1-1/4	3/8	1/8	Steel	
34-028	2-3/4	2-3/4	1-3/16	1-3/16	3/8	5/32	Steel	
34-029	3-1/4	3-1/4	1-5/16	1-5/16	3/8	1/16	Steel	
78-020	4	4	1-1/2	1-1/2	.669*	None	Steel	
Flat Idler Pulleys – Standard-Duty								
34-002	2	1-7/8	3/4	7/8	3/8	1/16	Steel	
34-021	2-1/8	1-7/8	1/2	21/32	1/4	3/16	Steel	
34-001	2-1/8	1-7/8	1/2	21/32	3/8	3/16	Steel	
34-003	2-1/2	2	13/16	1-1/16	3/8	1/4	Steel	
34-006	2-15/32	2-1/4	1	1-1/8	3/8	1/16	Steel	
34-005	2-15/32	2-1/4	3/4	7/8	3/8	1/16	Steel	
34-010	3-1/8	2-3/4	7/8	1-1/8	3/8	1/16	Steel	
34-008	3-1/8	2-3/4	3/4	7/8	3/8	1/16	Steel	
34-012	3-1/4	3	3/4	15/16	3/8	1/32	Steel	
34-011	3-1/4	2-3/4	1-1/4	1-9/16	3/8	1/16	Steel	
34-009	3-1/4	2-3/4	7/8	1	3/8	1/8	Steel	
34-017	3-1/2	3-1/4	1	1-1/8	3/8	1/16	Steel	
34-018	3-5/8	3-1/4	1-1/4	1-3/8	3/8	1/16	Steel	
34-016	3-3/4	3-1/8	3/4	1	3/8	3/32	Steel	
34-015	3-3/4	3-1/4	3/4	7/8	3/8	1/16	Steel	
34-013	4	3-1/8	3/4	1-1/4	3/8	1/8	Steel	
34-014	4	3-1/8	3/4	1-1/4	3/8	3/16	Steel	
34-025	4-3/8	4-1/16	3/4	1	3/8	1/4	Steel	
34-019	4-1/2	4	3/4	7/8	3/8	1/16	Steel	
34-020	4-1/2	4	1	1-1/8	3/8	1/16	Steel	
V-Idler Pulleys – Standard-Duty								
34-031	2-5/8	N/A	N/A	5/8	3/8	3/16	Steel	
34-210	2-5/8	N/A	N/A	5/8	7/16	None	Steel	
34-030	3-1/16	N/A	N/A	23/32	3/8	1/8	Steel	
34-034	3-1/16	N/A	N/A	5/8	3/8	1/8	Steel	
34-033	3-1/16	N/A	N/A	3/4	3/8	1/8	Steel	
34-035	3-1/8	N/A	N/A	1/2	3/8	7/32	Steel	
34-036	3-1/2	N/A	N/A	3/4	3/8	1/8	Steel	
34-037	4	N/A	N/A	23/32	3/8	3/16	Steel	
34-038	4	N/A	N/A	13/16	3/8	3/32	Steel	
34-044	4-1/2	N/A	N/A	3/4	3/8	None	Steel	

Pulleys

OREGON	OD: (A)	Flat OD: (B)	Flat Width (C)	Overall Width (D)	Bore: (E)	Offset: (F)	Material	Product Code
Flat Idler Pulleys – High Speed Bearing – Heavy-Duty								
78-028	3-1/8	2-3/4	7/8	1-1/8	3/8	1/8	Composite	
34-023	3-3/16	2-3/4	7/8	1	.669*	None	Steel	
78-130	3-3/16	2-5/8	3/4	1	3/8	3/8	Composite	
78-027	3-1/4	2-3/4	7/8	1	1/2	None	Steel	
78-032	3-1/4	2-3/4	1-1/8	1-1/2	.669*	None	Steel	
34-209	3-3/8	2-11/16	7/8	1-1/16	3/8	3/16	Steel	
78-129	3-3/8	2-3/4	3/4	1	.669*	None	Composite	
78-128	3-1/2	2-5/8	3/4	1-3/16	5/16	3/8	Steel	
78-031	3-1/4	2-3/4	7/8	1	3/8	3/16	Steel	
78-132	3-1/2	2-3/4	3/4	1-1/8	1/4	3/8	Steel	
78-033	3-1/2	3	3/4	7/8	.669*	None	Steel	
78-056	3-3/4	3	3/4	1	3/8	1-3/16	Composite	
34-826	3-11/32	3-1/4	7/8	1	1/2	None	Composite	
78-054	3-3/4	2-7/8	1	1-3/8	3/8	3/8	Steel	
78-114	3-3/4	3-1/4	3/4	7/8	3/8	1/16	Steel	
78-034	3-3/4	3-1/4	3/4	7/8	.669*	None	Steel	
34-100	3-7/16	3	3/4	7/8	5-16	5/8	Composite	
34-104	3-13/16	3	1	1-3/8	3/8	1/16	Steel	
78-134	3-13/16	3-1/8	3/4	1-1/8	5/16	3/8	Steel	
34-046	3-7/8	3-1/16	3/4	1-3/32	3/8	1/8	Steel	
34-205	4	3-1/2	7/8	1-1/4	3/8	1/8	Steel	
78-013	4	3-1/16	1	1-1/2	3/8	1/8	Steel	
34-022	4-1/8	3-3/8	7/8	1-1/16	.669*	None	Steel	
34-041	4-1/8	3-1/2	7/8	1-1/8	3/8	1/16	Composite	
34-039	4-1/8	3-3/8	3/4	1-3/16	3/4	None	Steel	
78-050	4-1/8	3-1/2	7/8	1-1/16	3/8	3/32	Steel	
78-043	4-1/4	3-3/4	1	1-1/4	3/8	1/8	Steel	
78-053	4-5/16	3-1/2	1	1-3/8	3/8	3/8	Steel	
78-112	4-3/8	4-1/16	3/4	1	.669*	None	Steel	
78-044-1	4-1/2	4	1	1-1/8	3/8	1/64	Steel	
34-007	4-1/2	4	3/4	1	3/8	3/16	Steel	
78-052	4-1/2	3-5/8	5/8	1	3/8	1/4	Steel	
34-024	4-1/2	4	3/4	1	.625*	None	Steel	
78-021	4-5/8	4	3/4	1	1/2	None	Composite	
78-049	4-5/8	4	3/4	1-5/16	.669*	None	Steel	
78-037	4-7/16	4	1	1-3/16	.669*	None	Steel	
34-004	4-7/16	4	1	1-3/16	1/2	None	Steel	
34-820	4-3/4	4	1	1-5/16	3/8	1/8	Composite	
34-822	4-3/4	4	7/8	1-5/16	1/2	None	Composite	
78-055	4-3/4	4	3/4	1-5/16	.669*	None	Steel	
78-046	4-7/8	4-1/16	3/4	1-1/8	3/8	3/32	Steel	
78-110	4-7/8	4-1/16	3/4	1-1/8	3/8	1/16	Steel	
34-201	4-7/8	4	7/8	1-1/8	3/8	1/8	Steel	
78-098	4-7/8	4	3/4	1-3/16	3/8	5/32	Steel	
78-007	5	4-1/2	1	1-1/8	3/8	3/8	Composite	
78-133	5-1/8	4-1/2	1	1-1/2	.669*	None	Steel	
34-206	5-3/16	5	1-1/4	1-7/16	3/8	1/16	Steel	
34-109	5-3/16	4-1/2	1-1/4	1-5/8	.669*	None	Steel	
34-103	5-1/4	4-1/2	5/8	1-3/16	.669*	None	Steel	
78-051	5-1/2	4-3/4	1-3/16	1-9/16	3/8	11/16	Steel	
78-025	5-1/2	5	1-1/16	1-3/8	.669*	None	Steel	
78-006	5-1/2	5	1-1/16	1-3/8	.669*	None	Steel	
78-022	5-1/2	5	1-1/16	1-3/8	.669*	None	Steel	
78-047	5-3/4	5	1-1/16	1-1/2	3/8	7/16	Steel	
78-111	5-3/4	5	1-1/16	1-1/2	3/8	None	Steel	
78-300	5-3/4	5	1-1/16	1-1/2	3/8	1/4	Steel	
78-026	5-7/8	5	1-1/4	1-1/2	.669*	None	Composite	
78-116	6-1/4	5-1/2	1"	1-1/8"	1/2	5/16	Steel	
78-048	6	5-1/8	1-1/8	1-7/16	3/8	None	Steel	
78-023	6-3/4	6	1-1/8	1-3/8	.669*	None	Steel	

OREGON	OD: (A)	Flat OD: (B)	Flat Width (C)	Overall Width (D)	Bore: (E)	Offset: (F)	Material	Product Code
V-Idler Pulleys – High Speed Bearing – Heavy-Duty								
78-045	2-1/2	N/A	N/A	11-16	3/8	3/16	Composite	
34-102	2-13/16	N/A	N/A	5/8	.669*	None	Composite	
34-042	3-1/16	N/A	N/A	5/8	.669*	None	Steel	
34-824	3	N/A	N/A	11/16	.625*	None	Composite	
34-049	3-9/16	N/A	N/A	13/16	3/8	5/32	Steel	
34-043	3-9/16	N/A	N/A	13/16	.625*	None	Steel	
78-131	3-11/16	N/A	N/A	13/16	.669*	1/4	Steel	
78-029	4	N/A	N/A	11/16	3/8	3/16	Steel	
78-040	4	N/A	N/A	11/16	.669*	None	Steel	
78-041	4	N/A	N/A	13/16	.669*	None	Steel	
78-010	4-3/8	N/A	N/A	1	5/8	None	Steel	
78-113	4-1/2	N/A	N/A	13/16	3/8	5/16	Steel	
78-014	4-1/2	N/A	N/A	1-1/16	3/8	1/8	Steel	
78-000	4-1/2	N/A	N/A	3/4	.669*	None	Steel	
34-032	4-1/2	N/A	N/A	3/4	3/4	None	Steel	
78-121	4-7/8	N/A	N/A	15/16	3/8	3/16	Steel	
78-005	5	N/A	N/A	1-1/8	.669*	None	Steel	
34-106	5	N/A	N/A	7/8	.669*	None	Steel	
34-107	5	N/A	N/A	7/8	3/8	1/8	Steel	

High Speed Idlers

OREGON	OD: (A)	Flat OD: (B)	Flat Width (C)	Overall Width (D)	Bore: (E)	Offset: (F)	Material	Product Code
High Speed Composite Flat Idlers								
34-050	2	1-7/8	3/4	1	.669*	None	Composite	
34-051	2-1/8	1-7/8	1/2	3/4	.669*	None	Composite	
34-052	2-9/16	2-1/4	3/4	7/8	.669*	None	Composite	
34-053	3-1/16	2-3/4	7/8	1	.669*	None	Composite	
34-055	4	3-1/8	3/4	1-1/8	.669*	None	Composite	
34-056	4-5/8	4	3/4	1	.669*	None	Composite	
34-057	4-5/8	4	1	1-3/16	.669*	None	Composite	
34-058	4-3/4	4	7/8	1-3/8	.669*	None	Composite	
High Speed Composite V Idlers								
34-060	2	n/a	n/a	5/8	.669*	None	Composite	
34-061	2-1/2	n/a	n/a	3/4	.669*	None	Composite	
34-062	3	n/a	n/a	3/4	.669*	None	Composite	
34-063	3-1/2	n/a	n/a	3/4	.669*	None	Composite	
34-064	4	n/a	n/a	7/8	.669*	None	Composite	

* Use Reducer Bushings Listed Below

Reducer Bushings (for High Speed Idlers)

OREGON	Bore: Size	OD	Product Code
78-101	3/8" ID, flush	.669	
78-103	3/8" ID, 3/8" offset	.669	
78-100	1/2" ID, flush	.669	
78-102	1/2" ID, 1/4" offset	.669	
78-104	3/8" ID, offset	.669	
78-105-0	3/8" ID, 3/8" offset	.625	
78-106-0	3/8" ID, flush	.625	

78-101 78-103 78-102 78-104
78-106 78-105 78-107

P

Pulleys

OEM Replacement Idlers

OREGON	Replaces	Description	Product Code
34-013	AMF 13469 Noma 46476 Noma 52694	**Flat Idler Pulley** OD: 4", flat OD: 3-1/8" Flat width: 3/4", overall width: 1-1/2" Bore: 3/8"	
34-016	AMF 64761	**Flat Idler Pulley** For clutch pulley, transmission OD: 3-3/4", flat OD: 3-1/8" Flat width: 3/4", overall width: 1" Bore: 3/8"	
34-046	AYP 173438 AYP 104360X AYP 131494	**Flat Idler Pulley** For drive belt & mower deck on many 12 through 22 HP front engine tractors OD: 3-7/8", flat OD: 3-1/16", flat width: 3/4" Overall width: 1-3/32", bore: 3/8"	
78-043	AYP/Roper 105313X AYP/Roper 72215 AYP/Roper 5375	**Flat Idler Pulley** For clutch pulley, transmission drive tension OD: 4-1/4" , flat OD: 3-3/4", flat width: 7/8" Overall width: 1-5/16", bore: 3/8"	
34-049	AYP 139245	**"V" Idler Pulley** For 50" deck on 20 & 22 HP front engine tractors OD: 3-1/2", width: 3/4", bore: 3/8"	
78-054	AYP 173437	**Flat Idler Pulley** OD: 3-3/4", flat OD: 2-7/8", flat width: 1" Overall width: 1-3/8", ID: 3/8", offset: 3/8"	
78-053	AYP 173901	**Flat Idler Pulley** OD: 4-5/16", flat OD: 3-1/2", flat width: 1" Overall width: 1-3/8", ID: 3/8", offset: 3/8"	
78-052	AYP 175820	**Flat Idler Pulley** OD: 4-1/2", flat OD: 3-5/8", flat width: 5/8" Overall width: 1", ID: 3/8", offset: 1/4"	
78-051	AYP 177284	**Flat Idler Pulley** OD: 5-1/2", flat OD: 4-3/4", flat width: 1-3/16" Overall width: 1-9/16", ID: 3/8", offset: 11/16"	

P

OEM Replacement Idlers

OREGON	Replaces	Description	Product Code
78-013	AYP 177968	**Flat Idler Pulley** OD: 4", flat OD: 3-1/16" Flat width: 1", bore: 3/8", offset: 1/8"	
78-056	532179114 179114	**Flat Idler Pulley** OD: 3-1/2", flat OD: 3", flat width: 3/4" Overall width: 1", bore: 3/8", offset: 1-3/16" Composite material	
34-901	AYP 197379	**Flat Idler Pulley** - NEW Fits Craftsman 944, 917 Poulan PB19546LT Outer diameter: 5-3/8", inner diameter: 3/8", height: 1-5/8"	
34-903	AYP 532194327	**Flat Idler Pulley** - NEW Fits: AYPC20H42YT, PB19542LT, PB19546LT, PB19H42LT, PB195H46YT, PB19H42YT, PB20H42LT, PB20H42YT, PB20H46LT, PB22H42YT, PB22H46YT, and PB22H48YT Outer diameter: 3-1/2", inner diameter: 3/8", height: 1"	
34-904	AYP 539-132728	**Flat Idler Pulley** - NEW Fits Husqvarna CZ Series, RZ Series, & RZ4623 OD: 5-7/8", ID: 11/16", height: 1-59/64"	
34-318	AYP 146763 AYP 146763	**Idler Pulley** - NEW OD: 4-1/4", ID: 3/8", height: 11/16"	
34-902	AYP 194326 AYP 532194326	**"V" Idler Pulley** - NEW Fits AYP C20H42YT Outer diameter: 3-1/2", inner diameter: 5/8"	
78-014	AYP 189993 AYP 184058	**"V" Idler Pulley** For 5/8" belt OD: 4-1/2", bore: 3/8", offset: 1/8"	
34-905	AYP 539113962	**Pulley-Spindle** - NEW Fits Husqvarna EZ, RZ, Z Poulan PRO 461ZX OD: 5-1/2", ID: 12 pt. hex	
78-020	Bobcat 38184-2	**Flat Idler Pulley** OD: 4", bore: 3/8" Width: 1-1/2" No flange	

Pulleys

OREGON	Replaces	Description	Product Code	

OEM Replacement Idlers

78-111	Bobcat 38297	**Flat Idler Pulley** For XM series mowers OD: 5-3/4", flat OD: 5", flat width: 1-1/16" Overall width: 1-1/2", bore: 3/8"		
78-116	Bobcat 128169	**Flat Idler Pulley** Fits model 723D, Frontline 63" side discharge OD: 6-1/4", flat OD: 5-1/2", flat width: 1" Overall width: 1-1/8", bore: 1/2", offset: 5/16"		
78-031	Bobcat 38010-2A Bunton PAL0368A John Deere PT8649 Snapper Kees 76520	**Flat Idler Pulley** OD: 3-1/4", flat OD: 2-3/4", flat width: 7/8" Overall width: 1", bore: 3/8", offset: 3/16"		
34-007	Bobcat 38010-1A Gravely 21060 Scag 48068 Snapper 7-6688	**Flat Idler Pulley** OD: 4-1/2", flat OD: 4", flat width: 3/4" Overall width: 1", bore: 3/8", offset: 3/16"		
34-209	Cub Cadet 00030782	**Flat Idler Pulley** Fits Z-Force mower, pump drive belt OD: 3-3/8", flat OD: 2-11/16", flat width: 7/8" Overall width: 1-1/16", bore: 3/8", offset: 3/16"		
34-201	Cub Cadet 01004101	**Flat Idler Pulley** Fits Z-Force mower For PTO drive belt OD: 4-7/8", flat OD: 4", flat width: 3/4" Overall width: 1-1/8", bore: 3/8", offset: 1/8"		
78-046	Cub Cadet 01004081	**Flat Idler Pulley** OD: 4-7/8", flat dia.: 4", flat width: 3/4" Overall width: 1", bore: 3/8", offset: 1/4"		
34-205	Cub Cadet 756-0542	**Flat Idler Pulley** Fits Z-Force mowers For spindle drive belt OD: 4", flat OD: 3-1/2", flat width: 7/8" Overall width: 1-1/4", bore: 3/8", offset: 1/8"		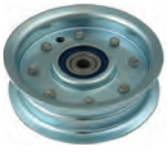
34-206	Cub Cadet 756-3062	**Flat Idler Pulley** Fits RTZ 50 deck For spindle drive belt OD: 5-3/16", flat OD: 5", flat width: 1-1/4" Overall width: 1-7/16", bore: 3/8", offset: 1/16"		

P

OEM Replacement Idlers

OREGON	Replaces	Description	Product Code
34-308	Cub Cadet 756-3005	**Flat Idler Pulley** - NEW Fits Exmark Vantage S series mowers; Toro commercial walk-behinds with floating decks; Grandstand mowers OD: 4-3/8", ID: 3/8", height: 7/8"	
34-066	Cub Cadet 956-3045 Cub Cadet 756-3045	**"V" Idler Pulley** Fits some GT, GTX, LGT, LGTX, RZT, & SLTX series models (2009–2013) OD: 5", width: 1-1/16", bore: 3/8", offset: 1/16"	
78-121	Bunton PL8540A Bunton 483025	**"V" Idler Pulley** For 61" & 71" cut, hydro rider commercial mowers OD: 4-7/8", width: 15/16", bore: 3/8", offset: 3/16"	
78-009	Dixie Chopper 30224	**Flat Idler Pulley** For 42", 50", 60", & 72" decks OD: 4-3/4", bore: 1/2"	
78-010	Dixie Chopper 30234	**"V" Idler Pulley** OD: 4-3/8", bore: 5/8", width: 1" overall For 5/8" V belt	
78-023	Excel 781385	**Flat Idler Pulley** Fits 44", 52", 60", & 72" Mini-Z & Super-Z models OD: 6-3/4", flat OD: 6", flat width: 1-1/8", bore: .669"	
78-022	Excel 781856	**Flat Idler Pulley** Fits 44", 52", 60", & 72" Mini-Z & Super-Z models OD: 5-1/2", flat OD: 5", flat width: 1", bore: .669" 1" flat width: .669" bore	
78-026	Excel 784504	**Flat Idler Pulley** Fits Fast Trak models OD: 5-7/8", flat OD: 5", flat width: 1-1/4" width: 1-1/2", bore: .669"	
78-011	Exmark 633109	**Flat Idler Pulley** OD: 6-3/4", flat width: 3/4", overall width: 1-3/16" bore: 17 mm	
34-301	Exmark 116-9639	**Flat Idler Pulley** - NEW Fits Exmark Lazer Z, Exmark 109-8590 & 116-9639 OD: 8-3/4", ID: 11/16", width: 1-5/8"	

Pulleys

OREGON	Replaces	Description	Product Code

OEM Replacement Idlers

34-302	Exmark 116-9639	**Flat Idler Pulley** - NEW Fits Exmark Metro, Quest, Viking, Lazer Z & Turf Tracer; Toro TimeCutter ZX, Z, ZX440, ZX480, & ZX525; Titan Z4800, Z5200, ZX5400, ZX5450, ZX6000, ZX6030, & ZX605 OD: 4-7/8", ID: 11/16", height: 3/4"	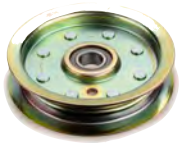
34-308	Exmark 93-1622	**Flat Idler Pulley** - NEW Fits Exmark Vantage S series mowers OD: 4-3/8", ID: 3/8", height: 7/8"	
34-309	Exmark 1-633109 Exmark 116-4667 Exmark 1164667 Exmark 126-7685 Exmark 1267685 Husqvarna 539102610	**Flat Idler Pulley** - NEW Fits Exmark Lazer Z and Lazer XP with 60" and 72" deck; Toro 60" and 72" Z 500's Z Master, 74260 Z 597 with 60"" and 72" deck OD: 6-3/4", ID: 11/16", height: 1-1/8"	
34-313	Exmark 126-9187 Exmark 116-4665 Exmark 126-9187	**Flat Idler Pulley** - NEW Fits Exmark Lazer Z OD: 5-3/4", ID: 11/16", width: 1-1/2"	
78-005	Exmark 603805	**"V" Idler Pulley** For 1/2" belt OD: 5", width: 1-1/8", bore: .669"	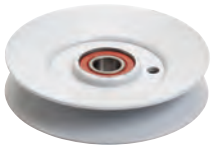
78-006	Exmark 613098	**Flat Idler Pulley** OD: 5-1/2", flat OD: 5", flat width: 1" Overall width: 1-5/16", bore: .669"	
78-021	Grasshopper 393225	**Flat Idler Pulley** OD: 4-5/8", flat OD: 4", flat width: 3/4" ID: 1/2" flush	
78-045	Grasshopper 393312	**"V" Idler Pulley** For 1/2" belt OD: 2-1/2" Composite material	
34-908	Hustler 786848 Husqvarna 532196104	**Flat Idler Pulley** - NEW Fits 42", 48", and 54" riders Outer diameter: 5-3/8", center hub: .456", width: 1-11/16"	
34-906	Hustler 786848	**Flat Idler Pulley** - NEW OD: 4", center hub: 5/8"	

P

OREGON	Replaces	Description	Product Code

OEM Replacement Idlers

34-902	Husqvarna 532194326	**"V" Idler Pulley** - NEW Fits AYP C20H42YT, PB19542LT, PB19546LT, PB19H42LT, PB195H46YT, PB19H42YT, PB20H42LT, PB20H42YT, PB20H46LT, PB22H42YT, PB22H46YT, and PB22H48YT OD: 3-1/2", ID: 5/8"	
78-025	John Deere AM106627	**Flat Idler Pulley** Fits G-100 tractor with 54" deck OD: 5-1/2", flat dia.: 5", flat width: 1" Overall width: 1-3/8", bore: .669"	
78-112	John Deere AM107468 John Deere AM37442 John Deere AM35862 John Deere AM37249	**Flat Idler Pulley** For 38", 39", 47", & 48" deck OD: 4-3/8", flat dia.: 4-1/8", flat width: 3/4" Overall width: 1", bore: .669"	
78-113	John Deere AM38171 John Deere AM103542	**"V" Idler Pulley** Heavy-duty, welded seam For 5/8" belt, commercial front mount 50, 60, & 72 decks Fits mule drive on 140, 300, 316, 317, & 318 series, primary mower drive on 110, 112, & 200 series, 38" 2-blade mower deck, & 41", 46", 48", 50", & 60" decks OD: 4-1/2", width: 13/16", ID: 3/8" offset	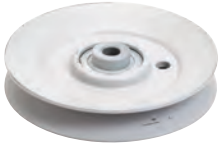
78-114	John Deere AM103018 MTD 756-0515	**Flat Idler Pulley** Fits S80, S82, & 68 riders, & 100 series LT, & MTD transmission pulley on the 700 series 32" side dischage deck idler for 5/8" belt OD: 3-3/4", flat OD: 3-1/4", ID: 3/8" offset	
78-131	John Deere AM118447	**"V" Idler Pulley** OD: 3-11/16" flange width: 13/16" ID .669", offset: 1/4"	
78-130	John Deere AM121970	**Flat Idler Pulley** OD: 3-3/16" flat OD: 2-5/8" flat width: 3/4" Overall width: 1", ID: 3/8", offset: 3/8"	
78-134	John Deere AM124346	**Flat Idler Pulley** OD: 3-13/16", flat OD: 3-1/8", flat width: 3/4" Overall width: 1-1/8", ID: 3/8", offset: 3/8"	
78-128	John Deere AM132764	**Flat Idler Pulley** OD: 3-1/2", flat OD: 2-5/8", flat width: 3/4" Overall width: 1-3/16", ID: 5/16", offset: 3/8"	

Pulleys

OEM Replacement Idlers

OREGON	Replaces	Description	Product Code	
34-100	John Deere AM134501	**Flat Idler Pulley** Fits X300 mowers For traction drive belt OD: 3-7/16", flat OD: 3", flat width: 3/4" Overall width: 7/8", bore: 5/16", offset: 5/8"		
34-103	John Deere AM135526	**Flat Idler Pulley** Fits X300 mowers For spindle drive belt OD: 5-1/4", flat OD: 4-1/2", flat width: 5/8" Overall width: 1-3/16", bore: .669"		
34-104	John Deere AM135773	**Flat Idler Pulley** Fits X300 mowers For spindle drive belt OD: 3-13/16", flat OD: 3", flat width: 1" Overall width: 1-3/3/8", bore: 3/8", offset: 1/16"		
34-106	John Deere AM136357	**"V" Idler Pulley** Fits X300 mowers For spindle drive belt OD: 5", overall width: 7/8", bore: .669"		
34-107	John Deere AM136367	**"V" Idler Pulley** Fits X300 mowers For spindle drive belt OD: 5", overall width: 7/8", bore: 3/8"		
34-102	John Deere GX20286	**"V" Idler Pulley** Fits 100 series For traction drive belt OD: 2-13/16", overall width: 5/8", bore: .669		
78-129	John Deere GX20287	**Flat Idler Pulley** OD: 3-3/8", flat OD: 2-3/4", flat width: 3/4" Overall width: 1", ID .669", offset: none		
78-132	John Deere GY00054 John Deere AM146880	**Flat Idler Pulley** OD: 3-1/2" flat OD: 2-3/4" flat width: 3/4" Overall width: 1-1/8", ID: 1/4", offset: 3/8"		
78-118-0	John Deere GY20067	**Flat Idler Pulley** Fits L-100, L-110, & L-120 series tractors For 42" & 48" decks Flat OD: 2-5/8", flat width: 7/8" Overall width: 1-3/16", bore: .669"		

OEM Replacement Idlers

OREGON	Replaces	Description	Product Code
78-133	John Deere GY20110	**Flat Idler Pulley** OD: 5-1/8", flat OD: 4-1/2", flat width 1" Overall width: 1-1/2", ID .669", offset: none	
34-109	John Deere GY20629	**Flat idler Pulley** Fits 100 series For spindle drive belt OD: 5-3/16", flat OD: 4-1/2", flat width: 1-1/4" Overall width: 1-5/8", bore: .669"	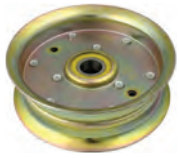
78-019	MTD 756-0116	**"V" Idler Pulley** For 1/2" belt OD: 3", bore: 3/8", offset: 1/4" offset	
34-010	MTD 756-0217	**Flat Idler Pulley** Fits traction drive idler for 600 series OD: 3-1/8", flat OD: 2-3/4", flat width: 7/8" Bore: 3/8", offset: 1/16"	
78-050	MTD 756-0365	**Flat Idler Pulley** For 46" deck, 44" rear discharge deck series 600, 700, & 800 deck H (1985–1994) OD: 4-1/8", flat OD: 3-1/2", flat width: 7/8" Overall width: 1-1/16", bore: 3/8", offset: 3/32"	
34-014	MTD 756-0437	**Flat Idler Pulley** Fits traction drive idler for 500, 600, & 700 series (1984–1995) OD: 4", flat OD: 3-1/8", flat width: 3/4" Overall width: 1-3/16", bore: 3/8"	
34-041	MTD 756-0627	**Flat Idler Pulley** Fits deck idler 46" for 600 & 800 series (1993 & newer) Flange OD: 4-1/8", OD: 3-1/2", flat width: 7/8" Overall width: 1-1/8", bore: 3/8", offset: 1/16"	
78-028	MTD 756-0981A MTD 956-0981A MTD 756-0981B MTD 756-0981 MTD 756-04224 MTD 956-04224	**Flat Idler Pulley** OD: 3-1/8", flat dia.: 2-3/4", flat width: 7/8" Overall width 1-1/8", bore: 3/8", offset: 1/16"	
78-029	MTD 756-1208	**"V" Idler Pulley** For 1/2" belt, electric PTO equipped 42" cut mower OD: 4", bore: 3/8", offset: 3/16", top width: 11/16"	

Pulleys

OEM Replacement Idlers

OREGON	Replaces	Description	Product Code
78-098	MTD 756-1229	**Flat Idler Pulley** OD: 4-7/8", flat dia.: 4-1/16", flat width: 3/4" Overall width: 1-1/8", bore: 3/8", offset: 3/32"	
78-047	MTD 756-3105	**Flat Idler Pulley** For 54" cut decks OD: 5-3/4", flat OD: 5", flat width: 1" Overall width: 1-1/2", bore: 3/8"	
78-065	MTD 956-04129B MTD 956-04129 MTD 756-04129	**Flat Idler Pulley** OD: 4-7/8", flat OD: 4-1/4", flat width: 3/4" Overall width: 1-1/8", bore: 3/8", offset: 1/16"	
34-066	Cub Cadet 956-3045 Cub Cadet 756-3045	**"V" Idler pulley** OD: 5", width: 1-1/16", bore: 3/8" offset: 1/16" For PTO drive on some GT series tractors and tanks (2009–2013)	
78-027	Murray 421409 Murray 91179	**Flat Idler Pulley** For engine to transmission OD: 3-1/4", flat OD: 2-3/4", flat width: 7/8" Overall width: 1", flush bore: 1/2" Steel material	
34-004	Murray 490118 Murray 90118	**Flat Idler Pulley** OD: 4-7/16", flat OD: 4", flat width: 1" ID: 1/2", overall width: 1-3/16"	
34-822	Murray 91801 Murray 774089	**Flat Idler Pulley** Fits 36", 38", 40", & 48" lawn tractor OD: 4-3/4", flat OD: 4", flat width: 7/8" Bore: 1/2", offset: none Composite material	
34-824	Murray 91178 Murray 420613	**"V" Idler Pulley** Fits 36" lawn tractor & 30" rider For "A" belt OD: 3", width: 11/16", bore: .625" (5/8"), offset: none Composite material	
78-021	Murray 91590 Murray 423238	**Flat Idler Pulley** OD: 4-5/8", flat OD: 4", flat width: 3/4" Bore: 1/2", offset: none	

OREGON	Replaces	Description	Product Code

OEM Replacement Idlers

34-826	Murray 91179 Murray 421409	**Flat Idler Pulley** For transmission drive tension/clutch, 38", 40", & 46" lawn tractors OD: 3-11/32", flat OD: 3-1/4", flat width: 7/8" Overall width: 1", bore: 1/2", offset: none	
78-048	Murray 095068MA	**Idler Pulley** Fits primary deck drive belt on 52100, 52101, 521613, 52161, 52370, 52431, 52461, & 52607 lawn and garden tractors OD: 6", flat OD: 5-1/8“, flat width: 1-1/8“ Overall width: 1-7/16“, bore: 3/8“, offset: none	
78-049	Murray 690549MA	**Idler Pulley** For primary deck drive belt on many 46" and 52" decks (1999–2009) OD: 4-5/8", flat OD: 4", flat width: 3/4" Overall width: 15/16", bore: .669", offset: none	
78-055	Murray 690387MA	**Idler Pulley** For belt on many 38"–46" decks OD: 4-3/4", flat OD: 4", flat width: 3/4" Overall width: 1-5/16", bore: .669", offset: none	
34-820	Noma 310326 Murray 300841	**Flat Idler Pulley** Belt tension idler For 38" & 39" tractor decks OD: 4-3/4", flat OD: 4", flat width: 1" Overall width: 1-5/15", bore: 3/8", offset: 1/8" Composite material	
78-007	Scag 48473	**Flat Idler Pulley** OD: 5", flat OD: 4-1/2", flat width: 1" Overall width: 1-1/8", bore: 3/8", offset: 3/8"	
78-300	Scag 48269 Jacobsen 182519	**Flat Idler Pulley** OD: 5-3/4", flat OD: 5", flat width: 1-1/16" Overall width: 1-1/2", bore: 3/8", offset: 1/4"	
78-110	Snapper 1-8585 Snapper 23966	**Flat Idler Pulley** OD: 4-7/8", flat OD: 4-1/16", flat width: 3/4" Overall width: 1-1/8", bore: 3/8", offset: 1/16"	
34-021	Snapper 1-2124	**Flat Idler Pulley** For self-propelled mowers, steel and aluminum deck OD: 2-1/8", flat OD: 1-7/8", flat width: 1/2", Overall width: 21/32", bore: 1/4", offset: 3/16"	

Pulleys

OREGON	Replaces	Description	Product Code

OEM Replacement Idlers

34-308	Toro 112895 Toro 93-1622 Wright Mfg. 71460006	**Flat Idler Pulley** - NEW For Exmark Vantage S series mowers; Toro commercial walk-behinds with floating decks; Grandstand mowers OD: 4-3/8", ID: 3/8", height: 7/8"	
78-044-1	Toro 36-3220 Zipper 100-1015 Ingersoll G900-2518 Ingersoll C37891	**Flat Idler Pulley** For 37" deck OD: 4-1/2", flat OD: 4", flat width: 1" Overall width: 1-1/8", bore" 3/8", offset: 1/64"	
34-039	Toro 104975	**Flat Idler Pulley** Fits model 300, 400, & 500 garden tractors OD: 4-1/8", flat OD: 3-3/8", flat width: 3/4" Overall width: 1-3/16", bore: 3/4", offset: none	
34-032	Toro 104974 Toro 92-7103	**"V" Idler Pulley** Fits garden tractor models 300, 400, & 500 For 5/8" belt OD: 4-1/4", width: 3/4", bore: 3/4", offset: none	
78-033	Toro 110-6775	**Flat Idler Pulley** For hydro drive on TimeCutter mowers OD: 3-1/2", flat OD: 3", flat width: 3/4" Overall width: 7/8", bore: .669", offset: none	
34-210	Toro 117-5299 Toro 46-5650 Exmark 117-5299 Exmark 46-5650	**"V" Idler Pulley** Fits 21" heavy-duty recycler/rear bagger mower models 22177TE, 22188, 22188TE, 22196, & 22198 (2010–2013) For 1/2" belt OD: 2-5/8", width: 5/8", bore: 7/16", offset: 0"	

OEM Replacement Drive Pulleys

44-302	AYP 136572	**Spindle Drive Pulley** For 44" decks OD: 5", ID: double hex .640"	
44-370	AYP 153535 AYP 129861 AYP173436 AYP177865	**Spindle Drive Pulley** Fits Oregon® 82-225, 82-014, 82-510, 82-015, & 82-026 spindles For 42", 44", 48", 50", & 54" decks OD: 5", ID: 12-tooth spline	
44-371	AYP 153532 AYP 129206 AYP 173435	**Spindle Drive Pulley** Fits Oregon 82-225, 82-014, 82-510, 82-015, & 82-026 spindles For 5/8" belt, 38" decks OD: 4-3/4", ID: 12 tooth spline	

P

OREGON	Replaces	Description	Product Code

OEM Replacement Drive Pulleys

78-062	HOP 195945	**Spindle Drive Pulley** For 42" & 46" mower decks with 2 blades (2006 & newer) OD: 6-1/4", ID: 12-tooth spline	
78-640	Bobcat 31011B	**Cast Iron Spindle Pulley** For 5/8" belt OD: 5-3/4", bore: 1", keyway: 1/4" Hub length: 1-1/2"	
78-641	Bobcat 38456 Bobcat 38018N	**Cast Iron Jackshaft Pulley** For 5/8" belt OD: 3-1/2", bore: 5/8", keyway: 3/16" Hub length: 1-1/2"	
78-643	Bobcat 38022B	**Cast Iron Transmission Pulley** For 5/8" belt OD: 5", bore: 5/8", keyway: 3/16" Hub length: 1-3/16"	
78-649	Bobcat 31008B	**Cast Iron Spindle Pulley** For 48" cut, 5/8" belt OD: 5-3/4", hub length: 1", bore: with set screws Keyway: 1/4"	
78-650	Bobcat 101002	**Cast Iron Pulley** For 5/8" belt OD: 3-1/2", bore: 1", keyway: 1/4" Hub length: 1-7/16"	
78-651	Bobcat 38460 Bobcat 38214	**Cast Iron Pulley** For 1/2" belt OD: 2-3/4", bore: 1", keyway: 1/4" Hub length: 1-1/16"	
78-678	Bobcat 38183	**Cast Iron Jackshaft Pulley** For 48" cut, double groove with hub, A section Dia.: 3-7/16", bore: 5/8" bore Hub length: 1-27/32", keyway: 3/16"	
78-644	Bunton PL0622 John Deere PT8755	**Cast Iron Spindle Pulley** For 1/2" belt OD: 4", bore: 25 mm, keyway: 1/4" hub length: 1-5/32"	

P

Pulleys

OREGON	Replaces	Description	Product Code

OEM Replacement Drive Pulleys

78-646	Bunton PL1246 John Deere PT8778	**Cast Iron Engine Pulley** For 5/8" belt OD: 4", bore: 1", keyway 1/4", hub length: 1-5/32"	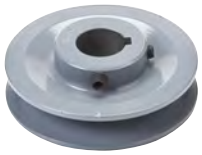
78-642	Encore 363216 Scag 48127 Ferris 1520814 Jacobson 182237 Scag 482744	**Cast Iron Drive Pulley** Fits 32", 36", 48", & 61" decks, taper lock single pulley For A & B belts OD: 5-3/4" Use with Oregon® 78-004 drive pulley bushing	
44-504	Exmark 109-0914	**Spindle Drive Pulley** Fits models with 66" deck: Lazer XS air cooled (S/N 850,000 & up), Lazer Z AC, Lazer Z XS Air Cooled, Lazer Z XS Diesel, Lazer Z XS Liquid Cooled (S/N 600,000 & up), & Lazer Z HP (S/N 670,000 & up) OD: 6.75", ID: 1-3/16", width: 1-1/8"	
44-503	Exmark 109-0929	**Spindle Drive Pulley** Fits models with 72" deck Lazer XS Air Cooled (S/N 850,000 & up), Lazer Z AC (S/N 720,000 & up), Lazer Z HP (S/N 600,000 – 669,999), Lazer Z XS Air Cooled, Lazer Z XS Diesel, Lazer Z XS Liquid Cooled (S/N 600,000 & up), LZD25KD725 (S/N 920,000 & up), & LZDS902K725 (S/N 312,000,000 & up) OD: 7.25", ID: 1-3/16", width: 1-1/8"	
44-506	Exmark 109-1023	**Spindle Drive Pulley** Fits models with 60" deck: Lazer XS Air Cooled (S/N 850,000 & up), Lazer Z Air Cooled, Lazer Z XS Air Cooled (S/N 720,000 & up), Lazer Z HP (S/N 600,000 & up), Lazer Z XS Diesel, Lazer Z XS Liquid Cooled (S/N 670,000 & Up), LZD25KD605 (S/N 920,000 & up), & LZDS902K605 (S/N 312,000,000 & up) OD: 6.13", ID: 1-3/16", width: 1-1/8"	
44-501	Exmark 109-2180	**Spindle Drive Pulley** Fits models with 72" deck LZDS902K72RD, LZX980EKC726, LZX940KC726, LZX980KC726 (S/N 312,000,000 & up), LZX34KC726, LZX38KC726 (S/N 920,000 & up), & Next Lazer Z Air Cooled (S/N 790,000 & up) OD: 9.00", ID: 1-3/16", width: 1-1/8"	
44-502	Exmark 109-9511	**Spindle Drive Pulley** Fits models with 60" deck LZX980KC606, LZDS902K60RD, LZX940EKC606 (S/N 313,000,000 & up), LZS29PKA606, LZX27KC606, LZX29EKC606, LZX29KA606, LZX34KC606, LZX38KC606 (S/N 920,000 & up), & Next Lazer Z Air Cooled (S/N 790,000 & up) OD: 7.25", ID: 1-3/16", width: 1-1/8"	
44-505	Exmark 116-0185	**Spindle Drive Pulley** Fits models with 52" deck: LZX24KA526, LZX27KC526 (S/N 920,000 & Up), LZX740EKC526 (S/N 313,000,000 & Up), LZX740KC526 (S/N 312,000,000 & Up), & Next Lazer Z Air Cooled (S/N 790,000 & up) OD: 6.75", ID: 1-3/16", width: 1-1/8"	

P

OREGON	Replaces	Description	Product Code

OEM Replacement Drive Pulleys

34-065	Cub Cadet 956-04216 Cub Cadet 756-04216	**Spindle Drive Pulley** Use with Oregon® 82-403 spindle For 5/8" belt, 50" & 54" decks OD: 5-1/2", spline ID: 5/8"	
44-100	MTD 756-0486	**Spindle Drive Pulley** Fits: 600 series tractor, deck E & F, use with Oregon 82-500 (use brake disc Oregon 44-364) For 32" & 36" deep deck (1985–1997), 5" serrated OD: 5-1/8", ID: 3/4" spline	
44-366	MTD 756-0488 MTD 753-0635	**Engine Pulley** Fits models 660-679 Top OD: 3-9/16", bottom OD: 5-1/2" Bore: 1", C-C: 3-1/2", height: 5-5/8"	
44-368	MTD 756-0556	**Spindle Drive Pulley** Fits 42" "G" 600 series deck (1990–1996), use with Oregon® 82-500 spindle assembly (use brake disc Oregon 44-364) OD: 5-1/2", ID: 3/4" spline	
44-101	MTD 756-0603 MTD 756-0124 MTD 756-0977	**Double Pulley** Fits Oregon spindles 82-511 & 82-516 Top pulley OD: 5", Belt: 5/8" Bottom pulley OD: 5", Belt: 1/2"	
44-369	MTD 756-0980	**Spindle Drive Pulley** Use with Oregon 82-513-2 spindle For 42" decks OD: 5-34", Spline ID: 5/8", Belt: 5/8"	
44-365	MTD 756-0982	**Engine Pulley** Fits 600 series tractors with variable speed drive Includes spacers Top OD: 3-9/16", bottom OD: 5-9/16", bore: 1"	

P

Pulleys

OREGON	Replaces	Description	Product Code

OEM Replacement Drive Pulleys

44-367	MTD 756-0983	**Engine Pulley** Fits 600 series tractors with hydrostatic drive Includes spacers Top OD: 3-9/16", bottom OD: 5-9/16", bore: 1"	
44-103	MTD 756-1202	**Double Pulley Assembly w/ Bearings** For 42" decks with 2-belt system Use with Oregon bearing 45-243 OD: 5"	
78-066	MTD 956-1227 MTD 756-1227	**Spindle Drive Pulley** For 42" mower decks (2006 & newer) OD: 6-1/4", spline ID: 5/8" Belt: 5/8"	
44-331	Murray 94592	**Spindle Drive Pulley** For 46" for 46" cut mowers OD: 5", ID: 5/8" spline, HT: 1"	
44-343	Murray 92425	**Spindle Drive Pulley** For 42" deck on front engine tractors OD: 6-1/4", spline bore: 9/16", belt: 5/8"	
44-339	Murray 94199 Murray 494199	**Spindle Drive Pulley** For 42" deck, fits splined shaft OD: 5-3/8", width: 1/2", spline bore: 9/16"	
44-323	Murray 20615	**Spindle Drive Pulley** For 25" & 42" side discharge OD: 4-1/2", bore: 5/8", keyway: 5/32" Use with Oregon® shaft 85-001	
44-332	Murray 23739	**Spindle Drive Pulley** For 36" riders & lawn tractors (1988 & older) OD: 5", bore: 5/8", keyway: 5/32"	
44-340	Murray 91951 Murray 55452 Murray 774090	**Spindle Drive Pulley** Use with Oregon 85-012 jackshaft For 30" cut mowers (1986 & newer) OD: 7-1/4", bore: .600" splined	

P

OREGON	Replaces	Description	Product Code

OEM Replacement Drive Pulleys

44-341	Murray 91769 Murray 91943	**Spindle Drive Pulley** Use with Oregon 85-008 jackshaft For 36", 38", & 40" cut OD: 5-1/4", bore: .600" splined, belt: 1/2"	
44-356	Murray 90242	**Spindle Drive Pulley** Use with Oregon 85-006 jackshaft For 30" cut (1984–1986) OD: 7-1/2", bore: 5/8", hub length: 1-1/8" Width: 1-3/8", keyway: 3/16", belt: 1/2"	
44-342	Murray 92127	**Spindle Drive Pulley** For outer spindles on 46" deck OD: 5", splined center hole: 9/16" Belt: 5/8"	
78-675	Power Trim 334	**Edger Pulley** For 2.2 HP Honda, 2–3 HP Briggs & Stratton OD: 2-1/2", bore: 5/8", keyway: 3/16" Hub length: 1-1/4", belt: 1/2"	
78-676	Power Trim 307	**Pulley with Hub** For “A” section belts OD: 2", bore: 5/8" Hub length: 1", keyway: 3/16"	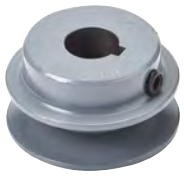
78-677	Power Trim 334-1	**Pulley with Hub** For 3-1/2 HP Honda engines, “A” section belts OD: 2-1/2", bore: 3/4" Hub length: 1-1/4", keyway: 3/16"	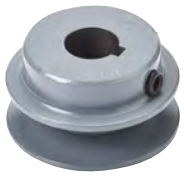
78-673	Scag 48199 Jacobsen 182186	**Double Groove Jackshaft Pulley** For “A” section belts OD: 3-1/4", bore: 5/8"	
78-003	Scag 48926	**Bushing** For tapered bore pulley, commercial mowers using cast iron housing Use with Oregon® 78-642 Bore: 1-1/8"	

P

Pulleys

OREGON	Replaces	Description	Product Code

OEM Replacement Drive Pulleys

78-680 — Scag 48200

Pulley
Use with Oregon 48-303 drive wheel
OD: 8", ID: 2.25"
Keyway: 3/16", belt: 5/8"

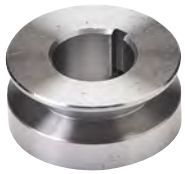

44-347 — Snapper 1-0787, Snapper 1-8587

Spindle Drive Pulley
OD: 6-7/8", ID: 3/4"
Hub length: 1"

78-690 — Snapper 2-1707

Drive Pulley
For self-propelled, walk-behind mowers
OD: 1-7/8", bore: 7/8", keyway: 5/32"

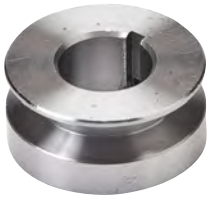

44-500 — Snapper 2-4521, Snapper 17736, Snapper 12140

Drive Pulley
Use with Oregon 41-005 shaft
For 21" self-propelled, walk-behind mowers, use with poly V-drive belt
OD: 2", bore: 3/8", length: 1-1/4", Hex ID: 1/2"

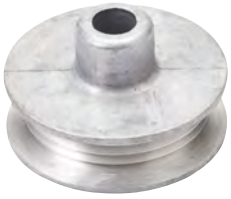

Steel V-Belt Drive Pulleys

OREGON	O.D.	Bore	Key Way	Product Code
44-306	2"	5/8"	3/16"	
44-301	2-1/4"	3/8"	1/8"	
44-310	2-1/2"	5/8"	3/16"	
44-312	3"	5/8"	3/16"	
44-313	3"	3/4"	3/16"	
44-348	3"	7/8"	3/16"	
44-351	3"	1"	1/4"	
44-316	3-1/4"	3/4"	3/16"	
44-318	3-1/2"	5/8"	3/16"	
44-319	3-1/2"	3/4"	3/16"	
44-321	4"	5/8"	3/16"	
44-322	4"	3/4"	3/16"	
44-353	4"	1"	1/4"	

- Designed for 4-L, 1/2" section v-belts
- Light-weight – more strength per pound
- Machined steel hubs
- Precision broached for true running performance
- Standard 1/8, 3/16, & 1/4 keyways

44-353

P

Drive Pulleys by Size Chart

OREGON	OD	ID	Hub Length	Keyway	Type	Belt
78-690	1-7/8"	7/8"	7/8"	5/32"	Steel	3/8"
44-500	2"	3/8"	1-1/4"		Aluminum	Poly “v”
78-676	2"	5/8"	1"	3/16"	Iron	A type
44-306	2"	5/8"	1"	3/16"	Steel	1/2"
44-301	2-1/4"	3/8"	1"	1/8"	Steel	1/2"
78-675	2-1/2"	5/8"	5/8"	3/16"	Iron	A type
44-310	2-1/2"	5/8"	1"	3/16"	Steel	1/2"
78-677	2-1/2"	3/4"	5/8"	3/16"	Iron	A type
78-651	2-3/4"	1"	1-1/16"	1/4"	Iron	A type
44-351	3"	1"	1"	1/4"	Steel	1/2"
44-312	3"	5/8"	1"	3/16"	Steel	1/2"
44-313	3"	3/4"	1"	3/16"	Steel	1/2"
44-348	3"	7/8"	1"	1/4"	Steel	1/2"
78-673	3-1/4"	5/8"	1"	3/16"	Iron	A type double v
44-316	3-1/4"	3/4"	1"	3/16"	Steel	1/2"
78-678	3-7/16"	5/8"	1-25/32"	3/16"	Iron	A type double v
44-318	3-1/2"	5/8"	1"		Steel	1/2"
78-641	3-1/2"	5/8"	1-1/2"	1/8"	Iron	B type
78-650	3-1/2"	1"	1-13/32"		Iron	B type
44-321	4"	5/8"	1"		Steel	1/2"
44-322	4"	3/4"	1"		Steel	1/2"
78-644	4"	25 mm/.987"	1-5/32"		Iron	A type
78-646	4"	1"	1-1/8"		Iron	B type
44-353	4"	1"	1"		Steel	1/2"
78-010	4-3/8"	5/8"				B type
44-323	4-1/2"	5/8"	1"	5/32"	Steel	1/2"
44-332	5"	5/8"	1"		Steel	1/2"
78-643	5"	5/8"	1-5/32"		Iron	B type
44-302	5"	0.640" spline			Steel	B type
44-331	5"	5/8" spine	1"			1/2"
44-341	5-1/4"	0.6	1-1/8"		Steel	1/2"
44-342	5"	9/16" spline				5/8"
44-339	5-3/8"	9/16" spline	1/8"		Steel	1/2"
44-368	5-1/2"	3/4" spline	2-1/4"		Steel	1/2"
78-640	5-3/4"	1"	1-1/2"		Iron	B type
78-649	5-3/4"	1"	1"		Iron	B type
78-642	5-3/4"	“H” taper	7/8"		Iron	A & B type
44-343	6-1/4"	9/16" spline	1/8"	Splined	Steel	5/8"
44-347	6-7/8"	3/4"	1"		Steel	A type
44-340	7-1/4"	0.6	1/8"		Steel	1/2"
44-356	7-1/2"	5/8"	1-3/8"	5/32"	Steel	1/2"

Can’t find what you’re looking for?
Try us online to search the latest products available.

OregonProducts.com

Seats

OREGON | Description | Product Code

73-821 **Premium High-Back Seat – Cordura Fabric**

Features: water-resistant cordura fabric, lumbar support (3 positions), adjustable armrests, upper backrest slides, document pouch, forward folding and reclining backrest, accepts operator presence switch
Applications: commercial turf, utility vehicles, professional turf, forklifts, skid steers, ground service equipment, construction equipment, utility tractors, row crop, & speciality/industrial tractors

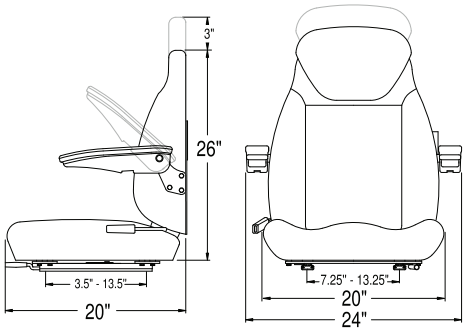

Bolt Patterns

Width	Depth
7" to 13-1/2"	13" max

Adjustable, slotted slides

73-822 **Suspension, Low Profile w/Weight Adjustment**
Features: fully-skirted & powder coated
Suspension stroke: 1.5", weight adjustment: 110–265 lbs.
Use with Oregon® 73-821 and many other seats

Bolt Patterns

Width	Depths
10-1/4"	5-1/4"
10-1/4"	6-1/2"
10-1/4"	8-5/8"
10-1/4"	9-5/8"
10-1/4"	10-3/4"
10-1/4"	12"
10-1/4"	12-3/4"

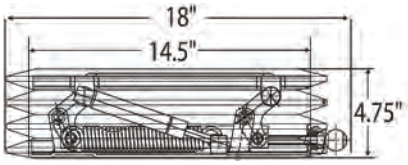

Side View

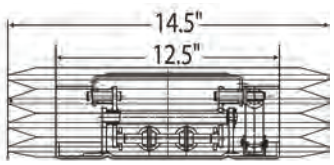

Front View

OREGON | Replaces | Description | Product Code

73-562-0 Bunton/Bobcat, Jacobsen, Toro, Excel, Exmark, Country Clipper, Ariens, Woods, Gravely, Scag, John Deere BM19828

Suspension Seat - High Back
Great, fully adjustable upgrade to smooth a rough ride
Fits many commercial brands
Black polyurethane, low profile seat with mounting brackets
Accepts seat safety switch
Height: 24", depth: 23", width: 23"

Bolt Pattern

Width	Depth
11-1/4"	11"

4-bolt mount

S

OREGON	Replaces	Description	Product Code

73-819 Universal Mount

Bolt Patterns

Width	Depth
8"	Slotted Slide
10-5/8"	Slotted Slide
11-1/4"	Slotted Slide

Spacing from 1" to 11-1/2"

Ultra High-Back Tractor Seat
Integral, black polyurethane seat with moveable arm rests, drain hole & universal mounting
Easy adjusting slide mechanism
Inside bottom slide/slot bolt pattern
Mount on existing rails
Does not accept seat switch
Can replace Oregon® 73-818
Height: 19", depth: 20", width: 17-1/2"

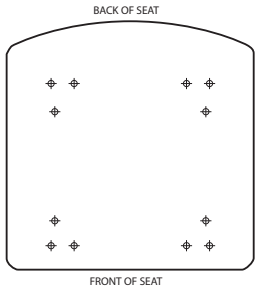

73-561 Universal Mount

Bolt Patterns

Width	Depth
5-1/4"	4-1/2"
6"	5"
7-1/2"	7"

1/2" center hole

High-Back Tractor Seat
Integral, waterproof, solid black polyurethane seat with drain hole & universal mounting
Can replace Oregon 73-560
Height: 14-1/2", depth: 20", width: 18-3/4"

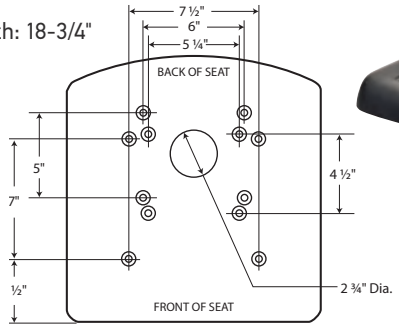

73-351 Universal Mount

Bolt Patterns

Width	Depth
5-1/4"	4-1/2"
6"	5"
7-1/2"	7"

1/2" center hole

Standard-Height Tractor Seat
Integral, waterproof, solid black polyurethane seat with universal mounting
Can replace Oregon 73-350
Height: 9-3/4", depth: 16-3/4"
Width: 18-3/4"

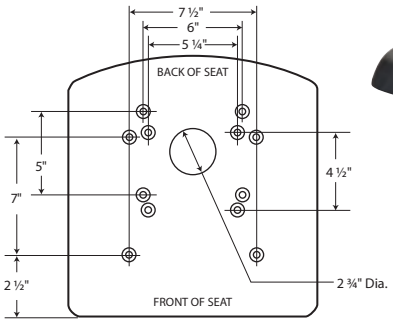

73-564-0 Universal Mount
John Deere Gator

Bolt Patterns

Width	Depth
7-1/2"	3"
7-1/2"	7"
8"	11-1/2"
8-1/4"	5"

Tractor Seat - Yellow
For John Deere Gator & others
Height: 19", depth: 20-1/2"
Width: 18"

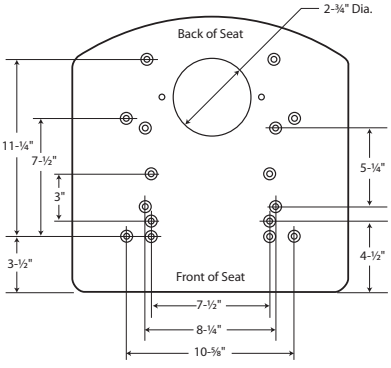

S

Seats

OREGON	Replaces	Description	Product Code

73-560

Replaces: AMF/Noma, Bolens, Gilson, MTD, Murray, Roper

Bolt Patterns

Width	Depth
6"	5"
7-1/2"	3"
7-1/2"	7"
8-1/4"	5"
11-1/4"	11"

Tractor Seat
Universal mount fits most brands
All mounting holes are 1/4-20 except the center mount
Center hole thread size 1/2-13
Spring mounts for Bolens, Gilson, MTD, Murray, & Roper
Height: 14", depth: 19.25"
Width: 19.75"

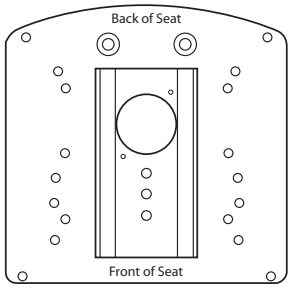

73-352-0

Replaces: Universal

Bolt Pattern

Long	Across
11-1/2"	10-1/2"

Universal Seat
For utility tractors, skid steer loaders, commercial equipment, and others
Universal mounting with easy adjusting slide mechanism
Four bolt mounting on rails
Height: 16", depth: 15", width: 18"

73-353-0

Replaces: Universal

Bolt Pattern
Universal slot pattern

Universal Seat
For utility tractors, skid steer loaders, commercial equipment, and others
Mounting hole for operator presence switch
Height: 18", depth: 17", width: 18"

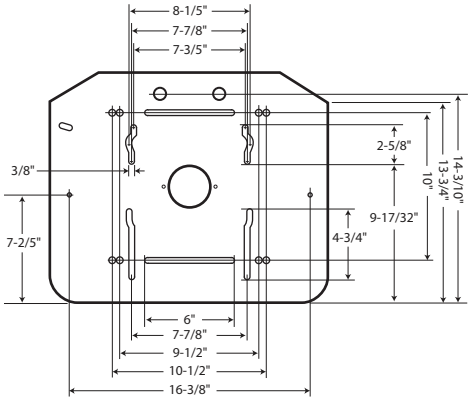

S

OREGON	Replaces	Description	Product Code

Snow Thrower Parts

SnoStik™

- U.S. patent pending
- High-impact polypropylene
- Bright red color
- 24" long
- Smooth curved finish
- Built-in hanging hook
- Hand guard
- Secure grip, knurled/ribbed handle
- (25) packaged in display box

OREGON	Replaces	Description	Product Code

Snostik™ Snow Removal & Safety Tool

73-039		**SnoStik** Snow removal and safety tool	

Auger Assembly – MTD

73-050	984-04027A, 984-04027, 984-5485, 784-5485, 706-15686-00-11 684-04027A, 684-04027 684-04025A, 684-04025	**Auger Assembly – Complete** Fits 21" single-stage snow throwers 31**1** & 31**2** models (1990 – 2005)	
73-051	Oregon® 73-050	**Rubber Paddle Set** Fits the Oregon 73-050 complete MTD auger assembly, includes hardware	

Paddles

73-048	Honda 06720-V10-030 • Code 6672448	**Paddle Set** Fits model HS520 snow thrower	
73-006	Honda 72521-730-003 • Code 1003375	**Paddle Set** Contains 8 pieces Rectangles: 1-7/8" x 4-3/4" Crescents: 9-1/4" x 2-1/8"	
73-016	MTD 731-0782 MTD 731-0781 MTD 731-0780 MTD 721-0287 MTD 753-0613 MTD 706-15688	**Paddle Set** Contains 6 pieces Fits 21" Snow Wolf Rectangles: 1-1/2" x 3-3/8" – 2 mtg. holes on 2" centers Crescents: 1-1/2" x 11-1/4" Use with Oregon 73-017 scraper bar	

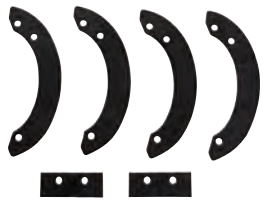

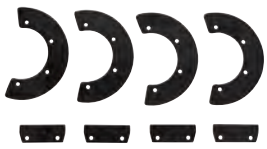

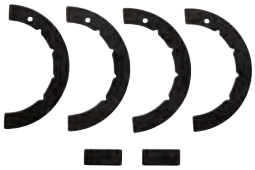

S

OREGON	Replaces	Description	Product Code

Paddles

73-043	Snapper 6-1215 Snapper 61215 Snapper 7061215	**Paddle Set** For 17" model LE-17 snow thrower	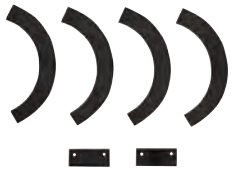
73-001	Snapper 6-0631 Snapper 60631 Snapper 7060631	**Paddle Set** Contains 6 pieces Fits model 3200 & 3201 Rectangles: 3-1/2" x 1-9/16" Crescents: 11-1/2" x 1-9/16" – 6 mtg. holes on 2-1/2" centers Use with Oregon® 73-013 scraper bar	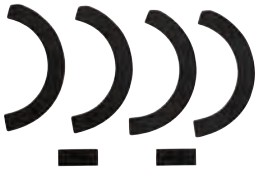
73-046	Toro 99-9313 Toro 88-0771 Toro 55-9250 Toro 55-9251	**Paddle** Fits models CCR3650/2450 & CCR3000 snow throwers	
73-003	Toro 23-3730	**Paddle** Fits models S200 & S620 Length: 17-11/16", width: 2-3/4" Use with Oregon 73-014 scraper bar	
73-023	Toro 54-9921 Toro 104-2753	**Paddle** Fits CCR1000 snow thrower Length: 21-1/2", width: 3" 8 mtg holes on 3-1/16" centers; mtg hole dia.: 7/16" Use with Oregon 73-019 scraper	
73-037	Toro 84-1980 Toro 75-9090 Toro 80-0660	**Paddle** Fits Power Lite snow thrower Use with Oregon 73-036 paddle	

Scraper Bars / Shave Plates

73-029	Ariens 10164	**Scraper Bar** For 24" 2-stage snow throwers Steel material	
73-049	Honda 76322-V10-010 • Code 6672448	**Scraper Bar** Fits model HS520 snow thrower	
73-824	Honda 76322-747-A10	**Scraper Bar** Fits HS521/621 models	
73-022	John Deere M94511 Noma 302418	**Scraper Bar** Fits model TRS21 Length: 20-15/16" 4 mtg. holes on 6-3/4" centers Mtg. hole ID: 5/16"	

S

Snow Thrower Parts

OREGON	Replaces	Description	Product Code

Scraper Bars / Shave Plates

73-008	Jacobsen 991296 Jacobsen 990385 John Deere PT2254 Simplicity 1714519	**Scraper Bar** Fits Snowburst models and John Deere model 320 Length: 19", width: 2" Also fits Cub Cadet and White snow throwers Use with Oregon® 73-010 paddle	
73-054	Cub Cadet 790-00117-0637 Cub Cadet 784-5576	**Shave Plate** Fits some 22" 2-stage snow throwers (2007–2008)	
73-055	Cub Cadet 790-00118-0637 Cub Cadet 784-5582	**Shave Plate** Fits some 28" 2-stage snow throwers (2007–2008, & 2012)	
73-056	Cub Cadet 790-00119-0637	**Shave Plate** Fits some 30" 2-stage snow throwers (2007 & 2012)	
73-057	Cub Cadet 790-00120-0637 Cub Cadet 784-5581A	**Shave Plate** Fits many 24" 2-stage snow throwers (2007–2012)	
73-017	MTD 731-1033 MTD 731-0778 MTD 731-0812 MTD 731-0722 MTD 706-14240	**Scraper Bar** Fits models 191, 174, 180, 181, & 196 snow throwers (1988 & newer) Length: 19-7/8", slotted mtg. holes: 1/4" x 1" 4 mtg holes on 6" centers Use with Oregon 73-016 paddle	
73-058	Cub Cadet 790-00121 Cub Cadet 753-0626 Cub Cadet 784-5579	**Shave Plate** Fits many 26" 2-stage snow throwers (2007–2012)	
73-054	MTD 790-00117-0637 MTD 784-5576	**Shave Plate** Fits many 22" 2-stage snow throwers (2005–2012)	
73-055	MTD 790-00118-0637 MTD 784-5579 MTD 784-5582	**Shave Plate** Fits many 28" 2-stage snow throwers (2005–2012)	
73-056	MTD 790-00119-0637	**Shave Plate** Fits many 30" 2-stage snow throwers (2005–2012)	
73-057	MTD 790-00120-0637 MTD 784-5581A	**Shave Plate** Fits many 24" 2-stage snow throwers (2005–2012)	

S

OREGON	Replaces	Description	Product Code

Scraper Bars / Shave Plates

73-058	MTD 790-00121 MTD 753-0626 MTD 784-5579	**Shave Plate** Fits many 26" 2-stage snow throwers (2007–2012)	
73-823	Simplicity 7035948SM	**Scraper Bar** Fits 3HP, 19" snow throwers	
73-044	Snapper 2-4619 Snapper 28425	**Scraper Bar** Fits 17" model LE-17 snow thrower	
73-013	Snapper 1-8764 Snapper 1-8637 Snapper 28427	**Scraper Bar** Fits models 3200 & 3201 Length: 19-3/8", width: 2" Use with Oregon® 73-001 paddle set	
73-014	Toro 23-3170	**Scraper Bar** Fits models S200 & S620 Length: 19-5/8", width: 1-3/4" Use with Oregon 73-003 paddle	
73-018	Toro 55-8760	**Scraper Bar** Fits CCR2000 snow thrower Length: 18-7/8", mtg. hole dia.: .290" 3 mtg. holes on 8-1/2" centers Use with Oregon 73-015 paddle	
73-019	Toro 71-5390	**Scraper Bar** Fits CCR1000 snow thrower Length: 19-1/2", slotted mtg. holes: 1/4" x 3/8" 3 mtg. holes on 8-1/8" centers Use with Oregon 73-023 paddle set	
73-036	Toro 75-8780	**Scraper Bar** Fits Power Lite snow thrower Length: 15-3/8", width: 2-1/8", mtg. hole dia.: 1/4" Use with Oregon 73-037 paddle	
73-835	Toro 117-7717	**Scraper Bar** Fits Power Clear 180, 418, & 518 snow throwers	

Skids

73-030	Universal	**Skid** Fits White models ST800, 850, 950 & 1050, and many Toro, MTD, Deere, Noma, Murray, & Snapper models Eccentric washers allow mounting to a variety of mounting dimensions. Mounting width: from 2" (min) to 3" (max), bolt holes: 3/8"	
73-040	Universal	**Skid** Wear plate only Use with Oregon 73-030 skid	

S

Snow Thrower Parts

OREGON	Replaces	Description	Product Code	
Skids				
73-053	AYP 178777X479 AYP 78777	**Skid-RH** Fits 2-stage snow throwers (2002–2010)		
73-052	AYP 174762X479 AYP 174762	**Skid-LH** Fits 2-stage snow throwers (2002–2010)		
73-028	Ariens 24599 Ariens 02483859 John Deere M124413	**Skid** Fits all Ariens snow blowers, models 924080 & 924082 with 24" auger (1960 & newer) Center to center: 3"		
73-825	Honda 76153-736-010	**Skid** Fits HS50/55/70/80/724 models		
73-100	MTD 05002 MTD 05002-0637 Ariens 10165	**Skid** Fits 20" & 26" snow thrower models 225 & 590 (1988–1989) and Toro large frame snow blowers For MTD, use with Oregon® 73-024 wear bar Slots: 7/16" x 2" 2 slots on 3" centers		
73-020	MTD 784-5038B MTD 706-15944-00-10 MTD 784-5030	**Skid** For all 2-stage snow throwers 36", 40", 45", & Snowlite models (1995 & newer) Length: 10-1/4", width: 3-1/2" Slots: 7/16" x 2-1/2" 5 slots on 1-1/2" centers		
73-031	MTD 784-5580	**Skid** For 2-stage snow throwers (1992 & newer) Slots: 2-1/8" 2 slots on 2-3/4" centers		
73-059	Murray 1740718AYP Murray 780061 Murray 780061MA Murray 301380E701	**Skid** Fits some 2-stage snow throwers		
73-027	Snapper 37982 Snapper 32127 Snapper 7037982 Snapper 7032127	**Skid** For all 2-stage models Width: 5", height: 2-1/2" Slots: 5/16" x 1-5/8" 2 slots on 3" centers		

OREGON	Replaces	Description	Product Code

Skids

73-038	Toro 40-8160-01 Toro 3-3866	**Skid** Length: 5", width: 2-3/4" Slots: 5/16" x 1-5/8" 2 slots on on 2" centers	

Vane

73-026	Toro 52-7060	**Vane** Fits models S200 & S620	

Starter Handle

31-907	John Deere PT10615 Toro 77-8510	**Starter Handle** Mitten grip For Toro, Ariens, and others – snow blowers and lawnmowers	

Drive Discs

76-067-0	Ariens 3003 Gilson 32222 Jacobsen 158458 Snapper 1-0765 Snapper 10765 Snapper 7010765 Lawn Boy 741316 Gilson 18915	**Drive Disc** For large frame snow throwers Fits John Deere 828D & 1032D snow throwers OD: 6", ID: 5 3/8"	
76-070-0	Noma 53830 Ariens 22013 John Deere AM123355 Noma 313883	**Drive Disc** For 20", 23", & 25" snow throwers Fits John Deere 524D & 826D snow throwers OD: 4.4"	
76-073-0	MTD 05080A	**Drive Disc** Fits models 500, 510, 520, & 600 OD: 6"	

Drive Ring

76-075	MTD 935-0243B	**Drive Ring-Rubber** For self-propelled snow throwers (1992–2005) OD: 5", ID: 4", width: 1/2"	
76-076	Husqvarna 532179831	**Drive Ring-Rubber** For many snow throwers (2002 & newer) OD: 4-1/2", ID: 3-3/4", width: 1/2"	

S

Snow Thrower Parts

Shear Bolts

OREGON	Replaces	Description	Product Code	
80-747	Universal	**Shear Bolt** For Noma, Canadiana, & older MTDs Length: 2", size: 5/16-18		
80-740	Ariens 510015 Snapper 1-3865 Snapper 9-1550 Snapper 13865 Snapper 91550 Snapper 7013865 Snapper 7091550 John Deere AM122156	**Shear Bolt** For popular Ariens large frame models Length: 2", size: 5/16-18		
80-741	Ariens 510016 Jacobsen 342449	**Shear Bolt** For popular Ariens small frame models Length: 1-5/8", size: 1/4-20		
80-742	Ariens 532005 John Deere AM123342	**Shear Bolt** For compact snow throwers Length: 1-7/16", size: 1/4-20		
80-017	Honda 90102-732-010	**Shear Bolt** Fits HS50/55/624/70/80/828/928/1132/724 models		
80-018	Husqvarna 531002513	**Shear bolt** Fits ST1030, ST723, & ST926 snow throwers		
80-019	MTD 738-04155	**Shear Bolt** Fits 31A snow throwers (2005–2014) 5/16-18 x 1.75		
80-743	MTD 710-0890	**Shear Bolt** For 400, 500, 600, & 700 series snow throwers Length: 1-1/2", size: 5/16-18		
80-746	MTD 710-0891	**Shear Bolt** Fits 800 & 900 series snow throwers Length: 1-3/4", size: 5/16-18		
80-748	Noma 301172	**Shear Bolt** For 22", 23", 24", 25", & 27" snow throwers with 12" augers Length: 1-3/4", size: 1/4-20		

S

OREGON	Replaces	Description	Product Code

Shear Bolts

80-749	MTD 738-04124	**Shear Pin** For newer style snow throwers with shear and hair pin combination Non-threaded Use with Oregon® 02-901 hair pin Length: 1-1/2", diameter: 1/4"	
02-901	MTD 714-04040	**Hair Pin** For newer style snow throwers Use with Oregon 80-749 shear pin	
80-015	Murray 301171MA Murray 301171 Murray 1501217MA Murray 1501217	**Shear Bolt Kit** For dual stage snow throwers	
80-016	Snapper 7015257YP	**Shear Bolt** For dual stage snow throwers	

Bearings & Bushings – John Deere, Ariens

45-006	Ariens 55035 John Deere M124417	**Bushing** Fits auger shaft on models 924036, 924038, 924039, 924040, 924046, 924048, 924050, 924071, 924072, & 924073 OD: 1-1/8": ID: 1", length: 5/8", flange OD: 1-1/2", thickness: 1/8"	
45-007	Ariens 55039 John Deere M127082	**Bushing** Fits auger shaft on models 923001, 923004, 923006, 923014, 923017, 923018, 923019, 923020, 923022, & 923023, OD: 1", ID: 3/4", length: 5/8", flange OD: 1-1/4", thickness: 5/32"	
45-008	Ariens 55110 John Deere M127164	**Bushing** OD: 3/4", ID: 1/2", length: 5/8", flange OD: 1", thickness: 1/8"	
45-009	Ariens 55112 John Deere M127538	**Bushing** Fits impeller shaft on 924046, 924048, 924050, 924072, 924073, 924071, 924036, 924038, 924039, & 924040, OD: 1", ID: 3/4", length: 3/4", flange OD: 1-1/4": thickness: 1/8"	
45-013	Ariens 55030 John Deere M41522	**Bushing** Fits models 910 & 924 OD: 1", ID: 7/8", length: 5/8", flange OD: 1-1/4", thickness: 1/8"	
45-003	Ariens 55028	**Bushing** OD: 1.135", ID: .760", length: 765", flange OD: 1-3/8", thickness: 1/8"	

S

Snow Thrower Parts

OREGON	Replaces	Description	Product Code	
Bearings & Bushings – John Deere, Ariens				
45-275	Ariens 05500111	**Flange Bushing** For snow thrower friction drive 0.625" x 0.75" x 0.50" x 0.875"		
45-268	Ariens 05409300	**Ball Bearing** Fits snow thrower auger 0.88" x 1.75" x 0.50"		
45-270	Ariens 05417700	**Ball Bearing** Fits snow thrower wheel drive 1.45" x 2.19" x 0.63"		
45-271	Ariens 05418200	**Ball Bearing** Fits snow thrower auger and drive 1.0" x 2.0" x 0.56"		
45-272	Ariens 05435200	**Ball Bearing** Fits snow throwers friction drive 0.437" x 1.375" x 0.437"		
Bearings & Bushings – Cub Cadet, MTD				
45-048	741-0185 941-0185	**Bearing** For snow blower drive axle, self aligning Fits 800 & 900 series snow blowers, 28" & 33" width OD: 2-1/16", ID: 7/8", height: 1"		
45-050	741-0310 941-0310	**Bearing** For 20–24" & 36–40" snow blowers OD: 1.850", ID: 3/4"		
45-082	741-0490 741-0199 748-0151 941-0490	**Bushing** For shift shafts 20–21" OD: 1-1/4", ID: 3/4", height: 3/4"		
45-092	741-0293 748-0143 941-0293	**Bushing** For auger OD: 1", ID: 3/4", height: 3/4"		

S

OREGON	Replaces	Description	Product Code

Bearings & Bushings – Cub Cadet / MTD

45-095	741-0313 741-0487 941-0487A	**Bushing** OD: 13/16", ID: 5/8", height: 1"	
45-833	941-0475 741-0475	**Flange Bushing** For steering on riders, augers and chute assembly assembly on snow thrower OD: 1/2", ID: 3/8", width: 3/8", flange OD: 5/8", thickness: 3/32"	
45-276	741-0494	**Flange Bushing** Fits 31A model series snow throwers (1990–2014) ID: 1.05", OD: 1.16"	
45-280	741-0661B 741-0661A 741-0661	**Flange Bushing** Fits 31A model series snow throwers (2000–2014) ID: 0.754", OD: 1.0"	
45-281	741-0662	**Flange Bushing** Fits 31A model series snow throwers (1997–2014) ID: 0.75", OD: 1.0", height: 0.50"	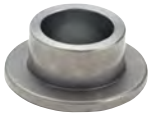
45-279	741-0663	**Flange Bushing** Fits 31A model series snow throwers (1997–2014) ID: 0.75", OD: 1.0" height: 0.925"	
45-278	941-0170 741-0170 741-0192 741-0244 941-0244	**Flange Bushing** Fits 31A model series snow throwers (2012–2014) ID: 1.0" w/ flats	
45-277	948-0108 748-0108 748-0269	**Flange Bushing** Fits 31A model series snow throwers (1985–2013) ID: 0.503", OD: 0.75"	

Bushing – Noma

73-025	54837 577023	**Bushing** For auger ID: .670", mtg. holes dia.: 1/4", center to center: 2.932" Length: 3-3/4", width: 1-7/8", thickness: .925"	

Miscellaneous Parts – Cub Cadet / MTD

73-832	731-0851A 731-0851	**Chute Flange Keeper** Fits 31A model series snow throwers (1987–2014)	
73-833	731-04869A 731-04869	**Chute Flange Keeper** Fits 31A model series snow throwers (2005–2014)	

S

Snow Thrower Parts

OREGON	Replaces	Description	Product Code	

Miscellaneous Parts – Cub Cadet / MTD

73-831	731-04894D 731-04894C 731-04894B 731-04894A 731-04894	**Lock Plate** Fits 31A model series snow throwers (2005–2014)	
73-829	731-04896B 731-04896A 731-04896	**Clutch Lock Cam** Fits 31A model series snow throwers (2005–2014)	
73-830	731-06451	**Chute Tilt Cable Guide** Fits 31A model series snow throwers (2008–2014)	
73-834	731-1313C 731-1313B 731-1313A 731-1313	**Chute Tilt Cable Guide** Fits 31A model series snow throwers (1990–2014)	
73-828	731-04913	**Steering Control Trigger** Fits 31A snow throwers (2005–2014)	
84-014	917-1425 717-1425	**Bronze Worm Gear** For snow throwers (1998–2014)	
72-054	734-1781 734-1855 734-1782 734-1656 734-1608	**Wheel** Fits 31A snow throwers (2009–2014) Bar tread: 8" x 1-3/4"	

Cables – Cub Cadet / MTD

46-002	746-0506 746-0573	**Cable – Clutch** For 21" snow thrower	
46-005	746-0910A	**Cable – Clutch** For snow throwers Overall length: 42-1/4", Conduit length: 35-5/8"	
46-032	746-04229B 746-04229 946-04229B 946-04229	**Cable – Drive Clutch** For many 2-stage snow throwers (2005–2012)	

S

Cables – Cub Cadet / MTD

OREGON	Replaces	Description	Product Code
46-033	746-04230A 746-04230 946-04230A 946-04230	**Cable – Auger Clutch** For many 2-stage snow throwers (2005–2012)	
46-034	746-04236 946-04236	**Cable – Auger Clutch** For many 2-stage snow throwers (2005–2012)	
46-035	746-04237 946-04237	**Cable – Clutch** For many single stage snow throwers (2005–2010)	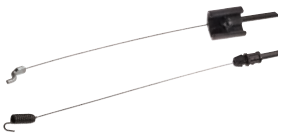
46-036	746-04256 946-04256	**Cable – Traction Drive** For many 2-stage snow throwers (2005–2008)	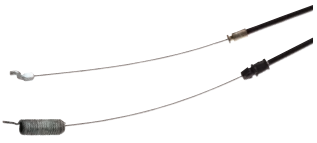
46-038	746-04477 946-04477	**Cable – Chute 4-Way Control** For some 2-stage snow throwers with joystick chute control (2009–2012)	
46-039	746-04528A 746-04528B 946-04528A 946-04528B	**Cable – Chute 4-Way Control** For some 2-stage snow throwers with joystick chute control (2009–2012)	
46-042	746-04640 946-04640	**Cable – Auger** For some 2-stage snow throwers (2009–2012)	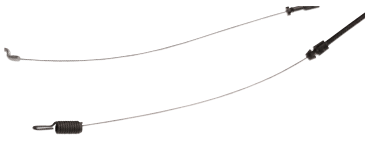
46-043	746-04642 746-04642A 946-04642 946-04642A	**Cable – Traction Drive** For some 2-stage snow throwers (2009–2012)	
46-044	746-0897 746-0897A 946-0897 946-0897A	**Cable – Auger Clutch** For many 2-stage snow throwers (1995–2012)	

S

Snow Thrower Parts

OREGON	Replaces	Description	Product Code	

Cables – Cub Cadet / MTD

46-006	746-0898B 746-0898 746-0898B 946-0898B	**Cable – Traction Drive** For many 2-stage snow throwers (1995–2012)		
46-046	746-0902 946-0902	**Cable – Chute** For some 2-stage snow throwers (1998–2010)		
46-047	746-0903 946-0903	**Cable – Chute** For some 2-stage snow throwers (1998–2010)		
46-048	746-0949A 746-0949	**Cable – Steering** For some 2-stage snow throwers (1998–2010)		
46-049	746-0956B 946-0956B 946-0956C	**Cable – Steering** For some 2-stage snow throwers (1998–2012)		
46-337	946-04007 746-04007	**Auger Control Cable** Fits 31A snow throwers (2004–2010) Total length: 48-13/16" Conduit length: 35-1/4"		
46-342	946-04008 746-04008	**Drive Control Cable** Fits 31A snow throwers (2004-2010) Total length: 50-5/8" Conduit length: 33-11/16"		
46-341	946-0951A 746-0951A 746-0951	**Auger Idler Cable** Fits 31A snow throwers (1998–2014) Total length: 16-5/16" Conduit length: N/A		
46-340	746-0952	**Drive Control Cable** Fits 31A snow throwers (1998–2014) Total length: 26-1/2" Conduit length: N/A		

S

OREGON	Replaces	Description	Product Code

Cables – Cub Cadet / MTD

46-339	946-0896 746-0896	**Chute Deflector Control Cable** Fits 31A snow throwers (1993–2005) Total length: 54-3/8" Conduit length: 43-7/8"	
46-338	946-0901 746-0901	**Chute Deflector Control Cable** Fits 31A snow throwers (1998–2005) Total length: 54-3/8" Conduit length: 43-7/8"	

Carburetor Kits – Cub Cadet / MTD

49-329	951-12760A 951-11332A 951-11332 751-12760A 751-11332A 751-11332	**Carburetor Kit** Fits 31A model series snow throwers with 483-SUB engines (2008 – 2014)	
49-331	951-12762A 951-11219A 951-11219 751-12762A 751-11219A 751-11219	**Carburetor Kit** Fits 31A model series snow throwers with 478-SUA/SUB engines (2009–2014)	
49-328	951-12788A 951-11021A 951-11021 751-12788A 751-11021A 751-11021	**Carburetor Kit** Fits 31A model series snow throwers with 170-SU/270-JU/270-SUA/370-SUC engines (2008–2014)	
49-327	951-14231 951-11355A 951-11355 751-14321 751-11355A 751-11355	**Carburetor Kit** Fits 31A model series snow throwers with 490-SU/490-SUA engines	

Carburetors – Tecumseh

50-640	640084B	**Carburetor** Fits models HSK50, HSK40, & LH195SP Replaces MFG No. 5285	
50-642	632334A	**Carburetor** Fits models HM70, HM80, HMSK80, & HMSK90 Replaces MFG No. 1099 & 1432	

S

Snow Thrower Parts

OREGON	Replaces	Description	Product Code

Carburetors – Tecumseh

50-659	640349 640052 640054	**Carburetor** Fits models HMSK80, HMSK85, HMSK90, HMSK100, HMSK105, LH318SA, & LH358SA Replaces MFG No. 5313, 5002, & 5036	

Primer – Cub Cadet / MTD

49-326	951-10639A 951-10639 951-10639 751-10639A 751-10639	**Primer Assembly** Fits 31A model series snow throwers (2008–2014)	

Recoil Starters – MTD

31-119	951-10658 751-10658	**Recoil Starter** Fits snow throwers with 165-SU, 265-SU, 270-SU, 365-SU, or 370-SU engines (2008 & newer)	
31-120	951-10955 751-10955	**Recoil Starter** Fits snow throwers with 161-JW or 161-JWA engines (2008 & newer)	
31-121	951-11310 751-11310	**Recoil Starter** For snow throwers with 483-SU, 483-SUA, 490-SU, or 490-SUA, engines	

Recoil Starter – Tecumseh

31-051	590420A	**Recoil Starter** Fits Snow King applications (1989 & older)	
31-116	590789	**Recoil Starter** Fits models LH318SA, LH358SA, OH318SA, OH195SA, & OH358SA ❄ Has winter pulley	

S

OREGON	Replaces	Description	Product Code

Recoil Starter – Tecumseh

31-117	590787 590784	**Recoil Starter** Fits model LH195SA ❄ Has winter pulley	

Starter Motors – MTD

33-745	951-11196 751-11196	**Electric Starter Motor, 120V** Fits snow throwers with 478-SU, 483-SU, or 490-SU engines (2009–2010)	
33-746	951-10645A 751-10645A	**Electric Starter Motor, 120V** Fits snow throwers with 265-JU, 270-JU, 165-SU, 370-SU, 365-SUA, 365-SUB, 370-SUA, 370-SUB, or 270-V engines (2007–2010)	

Starter Motors – Tecumseh

33-738	33329E	**Electric Starter Motor, 120V** Fits TVM, TVXL, HMSK, or OHSK engines	

Ignition Keys

33-256	Cub Cadet 951-10630 Cub Cadet 751-10630 Cub Cadet 731-05632 MTD 951-10630 MTD 751-10630 MTD 731-05632	**Ignition Key** Fits 31A model series snow throwers (2008–2014)	
33-089	Cub Cadet 725-1660 MTD 725-1660 Tecumseh 35062	**Ignition Key** For snow throwers with Tecumseh engines	

S

Snow Thrower Parts

Belts

OREGON	OEM No.	Size	Description	Product Code
Ariens				
75-906	7200004	1/2" x 36"	**Auger Drive Belt** Fits 924124, 924125, 924126, 924127, 924335, 924336, & 924337 raw edge	
75-907	7200007	1/2" x 35"	**Auger Drive Belt** Fits 932105 & 932506 raw edge	
75-908	7200020	1/2" x 37-3/8"	**Auger Drive Belt** Fits 926001, 926002, 926004, 926005, 926101, 926102, 926300, 926301, 926304, & 926504 raw edge	
75-909	7200021	1/2" x 38-3/8"	**Auger Drive Belt** Fits 926003, 926006, 926103, 926302, 926303, 926500, & 926501 raw edge	
75-983	7236200	1/2 x 38"	**Auger Drive Belt** Fits 924500, 924503, & 924506 raw edge	
75-098	7204700	3/8" x 35-3/4"	**Auger Drive Belt** Fits ST524,ST624,ST724,ST824,ST732,& ST832	
75-080	7205600	1/2" x 32"	**Auger Drive Belt** Fits 22999, 922002, 922003, 922006,922007, 922008, 922009, 922010, 922012, 922014, 922016, 922018, 922019, 922020, 922021, 922022, 922023, 922024, 922024, & 922999	
75-067	7207400	1/4" x 27"	**Traction Drive Belt** Fits 922003, 922006, 922007, 922007, 922008, 922008, 922009, 922010, 922012, 922013, 922014, 922015, 922016, 922017, 922018, 922019, 922020, 922021, 922022, 922023, 922024, & 922025 Set of two, matched	
75-117	7208600	1/2" x 40"	**Auger Drive Belt** Fits 924027, 924040, 924050, 924051, 924071, 924072, 924073, 924074, 924075, 924076, 924077, 924079, 924080, 924082, 924085, 924087, 924091, 92492, 924093, 924100, 924101, 924102, 924103, 924104, 924105, 924106, 924107, 924108, 924109, 924110, 924111, 924112, 924113, 924311, 924317, 924318, 924319, 924320, 924321, 924322, 924323, 924324, 924325, 924326, 924327, 924328, 924329, 924330, & 924500	
75-096	7210800 7206100 7207200 7208300	1/2" x 36-3/4"	**Auger Drive Belt** Fits 924024, 924026, 924028, 924029, 924032, 924036, 924038, 924039, 924042, 924044, 924046, 924048, 924052 924054, 924081, 924083, 924084, 924086, 924312, & 924313	
75-084	7211400	1/2" x 34-7/8"	**Auger Drive Belt** Fits 932001, 932004, 932006, 932007, 932016, 932025, 932030, 932102, 932103, 932310, 932400, & 932500	
AYP				
115-222	408010 183533	5/8" x 38"	**Impeller Drive Belt** Fits snow blower models 10527SBE (2003–2008), 10530SBE (2006), 1130SBE (2006 –2008), 5524SB, 5524SE, 5524ST, 5524STE (2002–2008), 8024ST (2002), 8524ST (2004), 8527SB (2006), 9027ST (2002–2004), 924SB, & 927SB (2006–2008)	
115-220	408007	5/8" x 38-1/4"	**Impeller Drive Belt** Fits snow blower models 10527SB, 1130SB, 5524SB (2008), 14527SB, 15530SB, ST261E (2009), 924SB (2008–2010), 1650EXL, ST230E (2012), 924HV (2010–2013), 5524ST, ST276EP (2012–2013), 11524E, 14527E, & ST268EP (2013)	
115-221	408019	5/8" x 39-1/4"	**Impeller Drive Belt** Fits snow blower models 1130SB (2008), 13524SB, 14527SB, 15530SB, 16530SB, ST261E, ST276EPT (2009), 1330SB (2008–2009), 16527EXL, 16530EXL (2011), 1650EXL, ST2109E, ST268EP, ST276EP (2012), 11524E, 14527E (2010–2012), 924HV (2010–2013), 5524ST, & ST276EP (2012–2013)	
115-223	428454 532428454	1/2" x 29-1/2"	**Traction Drive Belt** Fits snow thrower models 1827EXLT & 130 EXLT	
MTD				
75-365	954-0131 754-0131	3/8" x 35-1/2"	**Traction Drive Belt** Fits 310-840, 310-850, 310-965, 311-840, 311-850, 311-965, 312-980, 313-980, 314-980, 315-800, 315-860, 315-960,315-980, 316-800, 317-841, 317-850, 317-960, 318-840, 318-850, 319-840, 319-850, 319-960, 840-027, 840-031, 840-050, 840-095, 840-105, 840-205, 840-206, 840-327, 850-031, 850-054, 850-105, 850-205, 850-327, 960-206, 960-327, 31AE880, 31AE983, 31AE993, 31AE9P3, 31AE906, & 31AE9P6	
75-090	954-0194 754-0194	1/2" x 45"	**Auger Drive Belt** Fits 310-840, 310-850, 310-965, 311-840, 311-850, 311-965, 312-980, 313-980, 314-980, 315-800, 315-860, 315-960,315-980, 316-800, 317-841, 317-850, 317-960, 318-840, 318-850, 319-840, 319-850, 319-960, 840-027, 840-031, 840-050, 840-095, 840-105, 840-205, 840-206, 840-327, 850-031, 850-054, 850-105, 850-205, 850-327, 960-206, 960-327, 31AE880, 31AE983, 31AE993, 31AE9P3, 31AE906, & 31AE9P6	

Belts

OREGON	OEM No.	Size	Description	Product Code
MTD				
75-157	954-0367 754-0367	3/8" x 34-1/2"	**Auger Drive Belt** Fits 310-180, 310-181, 310-183, 311-180, 311-181, 311-183, 311-184, 312-180, 312-181, 313-180, 313-181, 314-180, 314-181, 315-140, 315E140, 316-140, 316E140, 317-140, 317E140, 31AS231, 31AE5KL, 31A-140, 31A-150, 31A-240, 31A-242, 31A-250, 31A260, 31AE150, 31AE162,31A-62E, 31AH62E, 31AH6ZF, 31AH6ZL, 31AH9J6, 31AM62E, 31AM62K, 31AM63E, 31AM63F, 31AM63L, 31AS230, 31AS231, 31AS250, 31AS6DE, 31AS6WE, 31B-140, 31BE150, 31B-140, 31C-140, & 31D-140. **Wheel Drive Belt** Fits 31AE5HT, 31AE6FF, 31AH5WT, 31AM62E, 31AM63T, 31AS6BC, 31AS6BE, 31AS6FE, 31AS6DT, 31AS6HE, & 31AS6WE	
75-158	954-0430B 754-0430	3/8" x 35-1/8"	**Auger Drive Belt** Fits 312-640, 312-660, 312-642, 313-640, 313-642, 313-660, 314-640, 314-642, 314-616, 314-660, 314-666, 31A-611, 31A-614, 31A-615, 315-611, 315-613, 315-641, 315-718, 315E610, 315E640, 315E641, 315E643, 315E60, 315E663, 315E740, 315E748, 315E753, 316-610, 316-611, 316-613, 316-641, 316E610, 316E611, 316E613, 316E633, 316E640, 316E641, 316E643, 316E660, 316E661, 316E663, 316E733, 316E740, 316E753, 316E760, 317-611, 317E610, 317E611, 317E613, 317E733, 317E738, 317E740, 317E742, 317E753, 317E760, 317E762, 31AE600, 31AE610, 31AE611, 31AE613, 31AE614, 31AE633, 31AE640, 31AE644, 31AE645, 31AE653, 31AE660, 31AE662, 31AE663, 31AE664, 31AE665, 31AE740, 31AE753, 31AE765, 31AE6C0, 31AE740, 31AE6A4, & 31BE640	
115-219	954-04050 754-04050	1/2" x 25"	**Auger Drive Belt** Fits 2-stage snow throwers (2005–2013)	
15-052	954-04201A	3/8" x 36"	**Wheel Drive Belt** For models 31AH54TG, 31AH55LH, 31AH55TH, 31AH64EG, 31AH65FH, 31AH65LG, 31AM62EE, 31AM63EF, 31BM62KE, & 31BM63LF (2009–2011)	
Murray				
15-014	579932MA	3/8'' x 33-3/16''	**Ground Drive Belt** For dual stage snow throwers (2000–2008) models 622505, 622515, 622518, 624504, 624505, 624604, 624650, 629117, 62451, 6271200, 6271201, 6271500, 624808, 624858, 626750, 626752, 627107, 627108, 627109, 627117, 627118, 627804, 627808, 627809, 627815, 627850, 627858, 627904, 627954, 628102, 628104, 629105, 629106, 629108, 629109, 629110, 629111, 629118, 629119, 629159, 629924, 631108, 6240810, 6271100, 6240900, 6271200, 6271201, 6271270, 6271271, Sno Super, Sno Blizzard, Alpina, and Sno Unlimited	
Noma				
75-289	319596	6V x 35-1/8"	**Auger Drive Belt** Fits all 3 and 4.5 HP models 6V Poly rib	
Sears / Craftsman				
15-052	954-04201A 954-04201 754-04201	3/8" x 36"	**Wheel Drive Belt** For models 247.88791, 247.88830, & 247.888301 (2009–2011)	
Snapper				
75-727	2-9604 7029604	3/8" x 33"	**Drive Belt** Fits 3200 series	
Toro				
15-051	26-9672	1/2" x 30-1/2''	**Auger Drive Belt** For models 622, 622E, 622R, 722, & 724 (1993 and newer)	
75-980	37-9080	3/8" x 29-5/8"	**Drive Belt** Fits 421 and 521 series	
75-066	55-9300	6V x 34"	**Auger Drive Belt** Fits CCR2000 6V poly rib	
75-192	71-5381	3/8" x 34-3/4"	**Drive Belt** Fits CCR1000	
75-939	95-6151	5V x 33-7/8"	**Auger Drive Belt** Fits CCR2400, CCR2450, CCR2500, CCR3000, CCR3600, & CCR3650. 5V poly rib	
Troy-Bilt				
15-052	954-04201A 954-04201 754-04201	3/8" x 36"	**Wheel Drive Belt** For models Storm 2410, Storm 2620, Storm 2840, Storm 3090, & Storm 3090XP (2009–2011)	

OREGON®

Spark Plugs

- Trouble-free ignition
- Easy start even in cold weather conditions
- Optimum engine performance
- Complete combustion, clean exhaust
- Extended spark plug life

Oregon® Spark Plugs

OREGON	Champion	Bosch	NGK	Nippondenso	Autolite	AC	Std. Pkg	Application	Product Code
77-134	RCJ6Y	WSR6F	BPMR7A	——	2984	CSR42S	10	**Resistor Plug**	
77-145	RCJ4Y	WSR4F	BPMR8Y	——	2974	——	10	**Resistor Plug**	
77-167	RZ7C	USR4AC	CMR7H	——	——	——	10	**Resistor Plug**	
77-189	——	——	CMR6A	——	4194	——	10	**Resistor Plug**	
77-193	C12YCC	FR8D+	BKR5E	——	5224	FR3LSK	10	**Resistor Plug**	
77-194	RJ4	WR7EC	BR6S	——		CR43	10	**Resistor Plug**	
77-196	L10	W7AC	B6HS	——	425	——	10	**Resistor Plug**	
77-197	RN7YC	WR6DC	BPR7ES	——	4252	R41CLS	10	**Resistor Plug**	
77-198	RDJ7Y	——	BPMR6F	——	2554	——	10	**Resistor Plug**	
77-199	Z9Y	U6AC	CR5HS	——	——	——	10	Honda 4-cycle trimmers	
77-200	Rz7C	——	CMR5H	——	4194	——	10	**Resistor Plug** Stihl 4-cycle engines Shindaiwa DH2510, EB8510, EB8520, HT2510 and LE2510	
77-300-1	CJ7Y	WS8F	BPM7A	W22MP-U	2974	CS42S	10	Alpina, Castor, Dynamark, Husqvarna, Jonsered, Lombard, Olympyk, & Solo chainsaws	
77-301-1	J19LM	W9EO	B2LM	W14LM-U	458	——	10	Newer Briggs & Stratton & Tecumseh	
77-302-1	CJ8	WS8E	BM6A	W20M-U/	2995	CS41	10	Briggs, Echo, & Poulan	

Oregon® Spark Plugs

OREGON	Champion	Bosch	NGK	Nippondenso	Autolite	AC	Std. Pkg	Application	Product Code
77-303-1	RC12YC	FR8DC	BCPR5ES	Q16PR-U11	5224	FR2LSK	10	**Resistor Plug** – Briggs & Stratton, Vanguard, & Kohler Command	
77-304-1	DJ8J	HS8E	BM6F	WA20M-U	2956	CS45T	10	Homelite, McCulloch, & others	
77-305-1	RJ19LM	W7AC	BR2LM	W14LM-U	414	——	10	**Resistor Plug** – Briggs & Stratton, & Tecumseh	
77-306-1	RCJ8	——	BMR6A	W20MR-U	245	——	10	**Resistor Plug** – Fits most single cylinder Briggs & Stratton, & Kawasaki 12.5 HP	
77-307-1	RCJ6Y	WSR5F	BPMR7A	W22MP-U		——	10	**Resistor Plug** – Tecumseh TC300 & Stihl chainsaws	
77-308-1	CJ6	WS7E	BM7A	W22M-U	254	CS40	10	For chainsaws & trimmers	
77-309-1	CJ8Y	WS7F	BPM6A	W20MP-U	2976	——	10	Echo, John Deere, & others	
77-310-1	N11YC	W8DC	BP5ES	W16EP-U/	54	——	10	Honda GVX120, GSX270, & GVX120	
77-311-1	CJ6Y	WS5F	BPM7A	W22MP-U	——	——	10	Kawasaki TEX54, Tecumseh TCH300	
77-312-1	RN9YC	——	BPR6ES	W20ETR-S	3923	——	10	**Resistor Plug** – Honda OHC Horiz. & Vert., Robin 8.5–25 HP EH & EHV	
77-313-1	J17LM	W9ECO	B4LM	W14LM-U	295	——	10	Tecumseh HM70–HM100, AV520, AV600, TC300	
77-314-1	RN11YC4	WR8DS	BPR5ES	W16EPR-U, W16EXR-U	54	——	10	**Resistor Plug** – Honda OHV GX120–670 & GVX50–620; Kawasaki OHV, FC150V, FC180V, & others; MTD snow throwers	
77-315-1	N9YC	W6D	BP6ES	W20EX-U	4253	——	10	Honda OHC Horiz. & Vert.; Robin 8.5–25 HP EH, & EHV	
77-316-1	DJ6J	HS5E	BM7F	T22MU	2954	——	10	Homelite mini models Super, E-Z, & EZ-AO; McCulloch 5-10A, MAC 10 series, & others	
77-317-1	J8C	W8E	B6S	W16S-U	294	——	10	**Resistor Plug** – Tecumseh HH100, HH120, HH60, 70, 80, & Others	
77-318-1	DJ7Y	HS8E	BPM6F	WA20M-U	2956	——	10	Homelite 180, 192, 200 (all models), CS40, DM40, LX30; McCulloch Eager Beaver	
77-319-1	RCJ8Y	——	BPMR4A	W14PR-UID	——	——	10	**Resistor Plug** – Tecumseh horiz. 2-cycles: Snow King up to 5 HP, & others	
77-321-1	L86C	W8A	B6HS	W22FSU	415	——	10	Honda 4.0 HP – 40, G40, G41, & G42; Honda 6.5 HP –G65 & GS65; Wisconsin OHV; Tecumseh OVM 120	
77-323-1	N2C	W2C	B8ES	W22ESL	2616 (NZC)	——	10	Poulan, Ski Doo, & Yamaha Snowmobiles	
77-324-1	RCJ7Y	WSR9E	BPMR4A	W14MPR-410	——	——	10	**Resistor Plug** – Alpina, Castor, Dynamark, Husqvarna, Jonsered, Lombard, Olympyk, & Solo chainsaws	

(All spark plugs are priced individually but sold only in standard packs of 10.
Order by total number of pieces required - not standard pack.)
PLEASE CHECK OWNER'S MANUAL FOR EXACT REPLACEMENT

S

Spark Plugs for 4-Cycle Hand Held Equipment

77-355-1 Stihl 0000 400 7009 **Spark Plug**
For 4-cycle hand-held equipment

Spark Plugs

OREGON	Replaces	Description	Product Code	
Spark Plug Accessories				
36-425	Echo 159012-03433	**Spark Plug Boot** - NEW For Echo Chain Saws & Power Blowers		
36-423	Echo A27000013	**Spark Plug Boot** - NEW Fits Echo PB265L & PPT265S		
36-424	Echo 159012-01620	**Spark Plug Boot** - NEW Fits Echo Chainsaws 280, 300, & 3000		
33-200	NGK VBOF 8032 45	**Spark Plug Boot** For overhead valve engines		
33-208	Homelite A55373-A	**Spark Plug Boot with Spring** 5mm for trimmers and chainsaws		
33-215	Honda 30700-ZE1-000 Honda 30700-ZE1-013	**Spark Plug Boot** Used on GX110-GX390		
33-216	Honda 30700-ZJ1-841 Honda 30700-ZJ1-003	**Spark Plug Boot** Used on GX120, GX610, GX620, GX670, GXV610, & GXV620		
33-516	Kawasaki 21130-0256 Shindaiwa 22102-72220 Kawasaki 20010-72221 Mitsubishi TR64961	**Spark Plug Boot with Spring** Fits Kawasaki TD26, TD40, TD43, & TD48 Fits Shindaiwa T25, T27, & C35 Fits Mitsubishi TL26, TL33, TL43, & T200		
36-422	Stihl 4128-405-1000	**Spark Plug Boot** - NEW Fits Stihl FS350, 400, 450, & 480		
36-427	Makita 957-604-240	**Spark Plug Boot** - NEW Fits Makita DPC series		

S

Spark Plug Accessories

OREGON	Replaces	Description	Product Code	
36-428	Red Max 505 29 88-01	**Spark Plug with Boot** - NEW Fits Red Max 143RII, 226R, 226RJ, 236R, 532RBS Brush cutter		
33-210		**Spark Plug Boot** Fits most spark plugs Protects plug from moisture Eliminates shock Positive connection		
42-452		**Spark Plug Wrench** Fits 3/4" short plug and 13/16" regular plug 14 mm Length: 4"		
33-201		**Shorting Clip Bolt-on Style** Use on all 14 mm spark plugs Length: 3" Zinc plated, pointed to penetrate plug boot		

Can't find what you're looking for?
Try us online to search the latest products available.

OregonProducts.com

Spark Plugs

OREGON	Replaces	Description	Product Code

OREGON Product Code

AMF, Lawn Chief, Noma

82-493

Replaces

AMF 51450	Lawn Chief 094920
AMF 56424	Noma 307534
AMF 39493	Noma 779066
Lawn Chief 015891	

Description

- Fits Dynamark mowers & Lawn Chief 1239 with 36", 38", 39", 40" & 42" decks
- Use with Oregon® 45-257 bearing
- Height: 6-1/2", Pulley Dia.: 5-1/2", Blade width: 2"

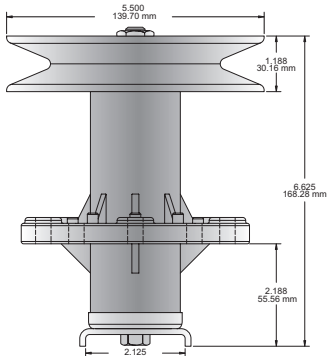

82-514

Replaces

AMF 50334	Noma 310240
AMF 50335	Noma 779057

Description

- For 32" & 42" decks
- Height: 6-1/4", pulley dia.: 4-3/4"
- Blade width: 2"
- Use with Oregon 45-257 bearing

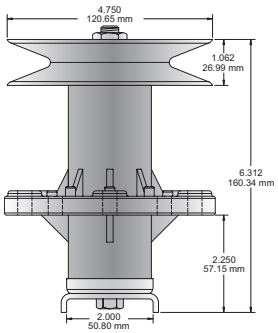

Ariens

82-010

Replaces

6444200	3485500	3625000
0341900	2526400	3615400
3037500	5412000	

Description

Complete spindle assembly combines all Ariens parts listed above. Ariens does not sell as a complete set.

- OD: 5", v-width: 5/8" pulley with shaft
- Fits most 40" decks LH side (large pulley)
- Includes housing, ball bearings, blade adaptor hub, spacer, washer, bearing slinger, & blade adaptor/trim

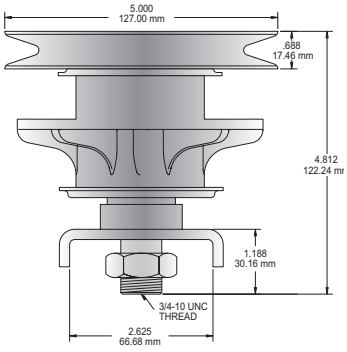

82-011

Replaces

3615300	3485500	0341900
5412000	3625000	3037500
6444200	2526400	

Description

Complete spindle assembly combines all Ariens parts listed above. Ariens does not sell as a complete set.

- Fits most 40" decks RH side (small pulley)
- OD: 4-3/4", "V" width pulley with shaft: 5/8"
- Includes ball bearings, blade adaptor hub, blade adaptor/trim, washer, & bearing slinger

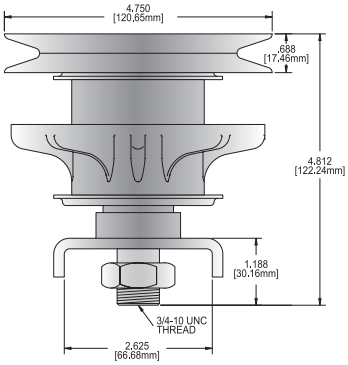

IMPORTANT: When installing spindles, follow all installation and maintenance instructions provided in the mowers owner/maintenance manual—including the correct torquing of the blade and pulley bolts/nuts as well as the lubrication of the spindle. Failure to do so may cause premature failure.

Spindles

OREGON Product Code

AYP

82-495

Replaces

121705X 106041X
106040X 121704X

Description

- Primary spindle on 44" cut models
- Right-hand spindle on 44" deck
- Use with Oregon® 45-257 bearing

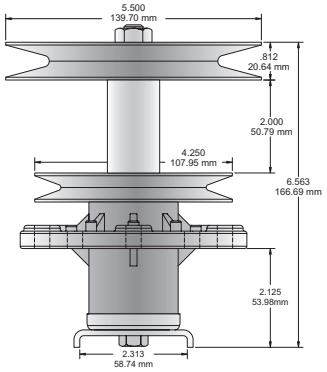

82-679

Replaces

121657X / 105477X 106038X / 121617X

Description

- Primary spindle
- Fits models 4200-14, 951940,
- 8208A29, & T52050A
- Center spindle on 50" cut - 20 HP
- Use with Oregon 45-257 bearing

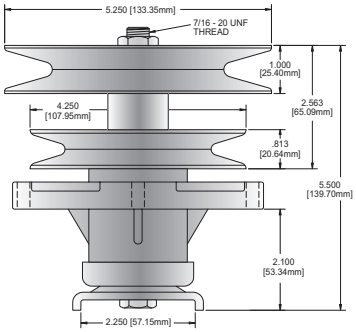

82-680

Replaces

136819 / 121622X 106037X
136818 / 105483X

Description

- Secondary spindle
- Fits models GT2500RB, GT2500CR, RL1844B, PC1844A, 4200-14, 8208A29, 951940, & 752050A
- Center & left spindle on 44" cut
- Outer spindle on 50" cut - 20 HP
- Use with Oregon 45-257 bearing
- 2 required

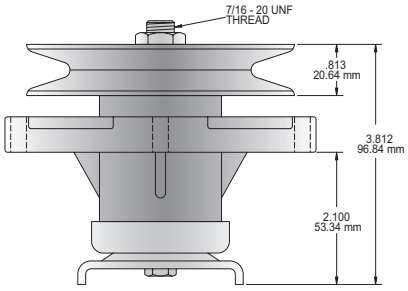

OREGON	Replaces	Description	Product Code
02-301	AYP 17490612	Self-tapping bolts to mount our quill 82-493, 82-495, 82-677, 82-678, 82-679, 82-680 & 82-514 to mower deck 3/8-16 x 1"	
02-304	AYP 173984	Self-tapping bolt to mount our 82-225 spindle to the mower deck 5/16-18 x1-1/4"	
04-001	AYP 129729 AYP 139729	Nut for pulley. Use on our quill 82-225 & shaft 85-017 on 36", 38" & 42" ventilated decks	
09-260	AYP 187690	Spindle washer 43/64" ID, 1-1/8" OD 5/32" Thickness	

S

IMPORTANT: When installing spindles, follow all installation and maintenance instructions provided in the mowers owner/maintenance manual—including the correct torquing of the blade and pulley bolts/nuts as well as the lubrication of the spindle. Failure to do so may cause premature failure.

OREGON Product Code

AYP

82-225

Replaces
130794

Description
- Fits 36", 38" & 42" ventilated decks with star blade mount
- Includes pulley nut, blade bolt, & washer
- Top bearing: Oregon® 45-257
- Lower bearing: Oregon 45-259
- Shaft: Oregon 85-017
- Pulley: Oregon 44-370 or 44-371

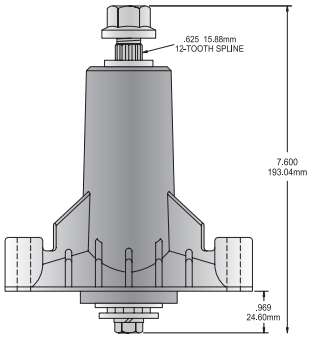

82-225-B **Bulk Pack:** 160 of Oregon 82-225

82-220

Replaces: 128774

Description
- Spindle housing
- For new models with star blade spindle
- Fits 36", 38" & 42" ventilated decks
- Use with Oregon 45-257 top bearing, 45-259 lower bearing

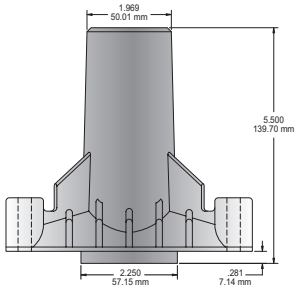

82-024

Replaces
Oregon 82-220

Description
- Heavy-duty version of 82-220
- Housing only 82-014

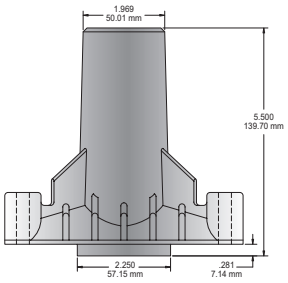

82-014

Replaces
130794

Description
- Heavy-duty version of Oregon 82-225
- Heavier, reinforced construction than OEM - HD bearings
- Fits 36", 38" & 42" ventilated decks
- For star blade mount
- Includes pulley nut, blade bolt, & washer
- Top bearing: Oregon 45-257
- Lower bearing: Oregon 45-259
- Shaft: Oregon 85-017
- Pulley: Oregon 44-370 or 44-371
- Tapped mounting holes

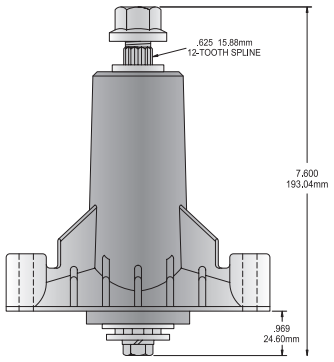

82-014-B **Bulk Pack:** 160 of Oregon 82-014

S

IMPORTANT: When installing spindles, follow all installation and maintenance instructions provided in the mowers owner/maintenance manual—including the correct torquing of the blade and pulley bolts/nuts as well as the lubrication of the spindle. Failure to do so may cause premature failure.

Spindles

OREGON Product Code

AYP, Husqvarna

82-510

Replaces
AYP 143651

Description
- Fits 44" & 50" decks
- For star center hole blades
- Use with Oregon® 45-259 & 45-257 bearings, 44-371 or 44-370 pulleys, 85-023 shaft

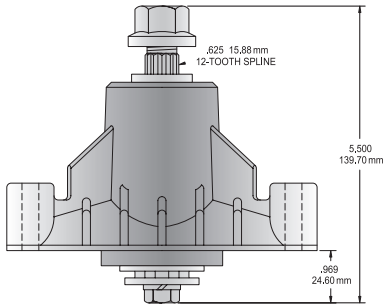

82-221

Replaces
AYP 137152

Description
- Spindle housing
- Fits 44" & 50" decks
- Use with Oregon 85-023 shaft, 45-259 & 45-257 bearings, 44-371 or 44-370 pulleys, 82-510 spindle

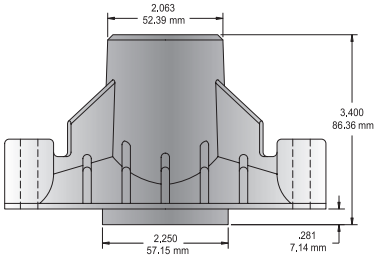

82-012

Replaces
AYP 174356 Husqvarna 587125201

Description
- Fits 48" decks (2001 & newer)
- Use Oregon 45-257 & 45-259 bearings, & 44-370 pulley

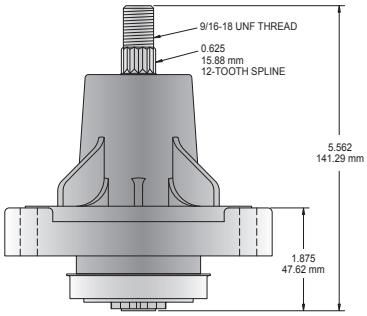

82-029

Replaces
AYP 187292 Husqvarna 532187292
AYP 192870 Husqvarna 587820301

Description
- Fits 54" decks
- Use with Oregon 45-257 & 45-259 bearings, 85-035 shaft, & 44-371 or 44-370 pulleys

Note: The only difference between 187292 and 192870 is that 187292 is greasable.

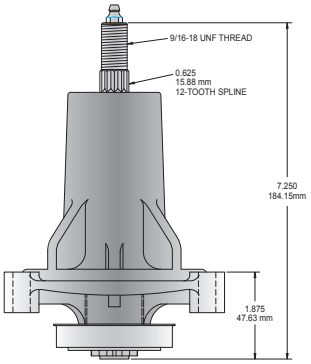

S

IMPORTANT: When installing spindles, follow all installation and maintenance instructions provided in the mowers owner/maintenance manual—including the correct torquing of the blade and pulley bolts/nuts as well as the lubrication of the spindle. Failure to do so may cause premature failure.

OREGON Product Code

AYP, Husqvarna

82-129 – NEW

Replaces
581650501

Description
- For Lawn Tractors
- Fits Husqvarna models, CTH 194, CTH 224T, CTCh 2646, CTH 2642TR, TC 238, & TC 242

82-108 – NEW

Replaces

187292	192870	539112057
192870	532187281	587125401
532192870	532187292	587253301
587125401	532192870	

Description
- For AYP 46", 48" & 54" decks
- 5 pt. star blade mount
- Height: 7"

AYP

82-126

Replaces
187281

Description
- Housing only for Oregon® 82-026
- Fits 54" decks
- Use with Oregon 45-257 & 45-259 bearings, 85-035 shaft, & 44-371 or 44-370 pulleys

S

IMPORTANT: When installing spindles, follow all installation and maintenance instructions provided in the mowers owner/maintenance manual—including the correct torquing of the blade and pulley bolts/nuts as well as the lubrication of the spindle. Failure to do so may cause premature failure.

Spindles

OREGON Product Code

Bunton, Bobcat

82-306

Replaces

Bobcat 36006N
Kees 362024
Exmark 302030
Jacobsen 552188
Snapper 7-6379

Description

- Fits 32" & 36" decks
- Use with Oregon 45-220 bearings

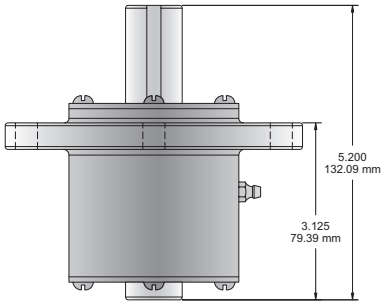

82-307-0

Replaces

Bobcat 36082N
Kees 482005
Exmark 402006
Jacobsen 552312
Snapper 7-6645

Description

- Fits 48" deck
- Use with Oregon 45-220 bearing

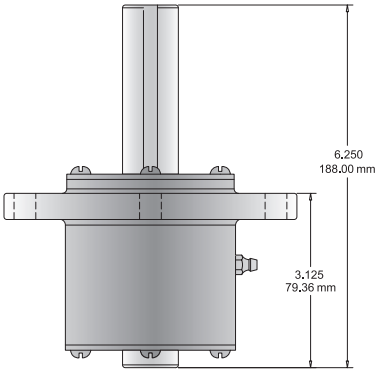

82-320

Replaces

Bobcat 36567

Description

- For 36" & 48" XM series mowers
- Use with Oregon 45-225 bearing
- Shaft length: 6-1/4"
- Shaft dia.: 1"

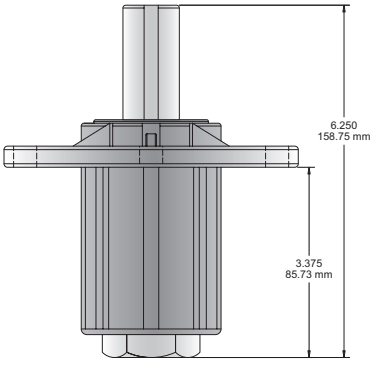

82-308

Replaces

Bunton PAL0806A
John Deere PT8633

Description

- Fits 36", 40", 48", 52", & 61"
- Shaft length: 6-1/2"
- Short hub
- Use with Oregon® 45-220 bearing

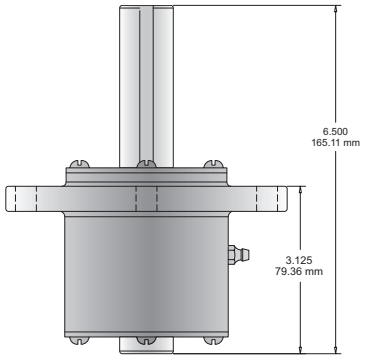

IMPORTANT: When installing spindles, follow all installation and maintenance instructions provided in the mowers owner/maintenance manual—including the correct torquing of the blade and pulley bolts/nuts as well as the lubrication of the spindle. Failure to do so may cause premature failure.

OREGON Product Code

Bunton, Bobcat

82-016

Replaces
Bobcat 2720759 Bunton 2720759

Description
- Fits ZT223 with 52" deck, RH & LH sides
- Use with Oregon 45-225 bearing

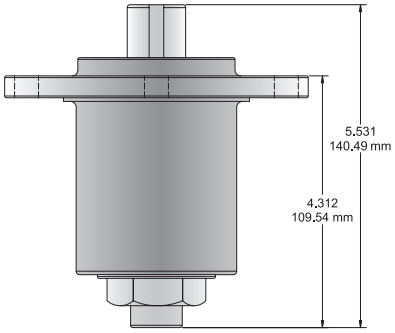

82-018

Replaces
Bobcat 2702758 Bunton 2702758

Description
- Fits ZT223 with 52" deck center spindle
- Use with Oregon 45-225 bearings

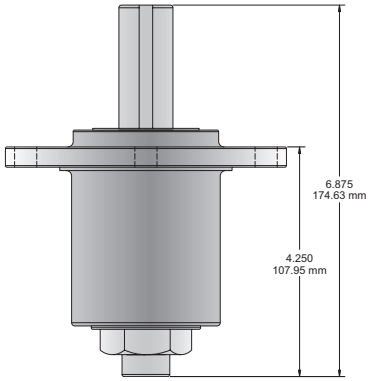

82-017

Replaces
Bobcat 2186207 Bunton 2186207

Description
- Fits ZT223 with 61" deck center spindle
- Use with Oregon 45-225 bearings

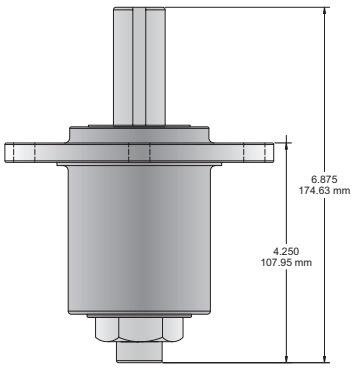

82-019

Replaces
Bobcat 2186205 Bunton 2186205

Description
- Fits ZT223 with 61" deck RH & LH sides
- Use with Oregon® 45-225 bearings

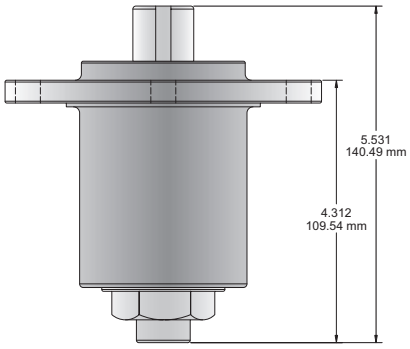

S

IMPORTANT: When installing spindles, follow all installation and maintenance instructions provided in the mowers owner/maintenance manual—including the correct torquing of the blade and pulley bolts/nuts as well as the lubrication of the spindle. Failure to do so may cause premature failure.

Spindles

OREGON Product Code

Bush Hog

82-552

Replaces
500048640

Description
- Fits PZ2861, PZ2561, TY3061 KH2, PZ3061 KH2, PZ2661 KW2, EC2561 KW, TD2661 KW, & EC2661 KW
- Includes 6" pulley & mounting plate

82-553

Replaces
500049843

Description
- Fits ES2252, TW2452 KW3, ES2452 KW3, ES2352 KH3, ES2352 KH3, TW2052 KH3, & ES2052 KH3
- Includes 5-1/4" pulley

82-554

Replaces
500049843

Description
- Fits ES2644, ES1744, ES2244, TW2044 KH3, & ES2044 KH3
- Includes 5" pulley

82-555

Replaces
99685

Description
- Fits TD-1100

S

IMPORTANT: When installing spindles, follow all installation and maintenance instructions provided in the mowers owner/maintenance manual—including the correct torquing of the blade and pulley bolts/nuts as well as the lubrication of the spindle. Failure to do so may cause premature failure.

OREGON Product Code

Bush Hog

82-557

Replaces
50051388

Description
- Fits RDTH60, RDTH72, ATH600, ATH720, TD1500, & TD1700
- **Does not include** blade washer, lock washer, or blade bolt

82-558

Replaces
5005552

Description
- Aluminum housing
- Fits HS1736B, HS1742B, HS1836B, HS1842B, HS2036K, & HS2042K

Caroni

82-357

Replaces
Caroni 30800

Description
- Fits most model decks
- Use with Oregon® 45-220 bearing

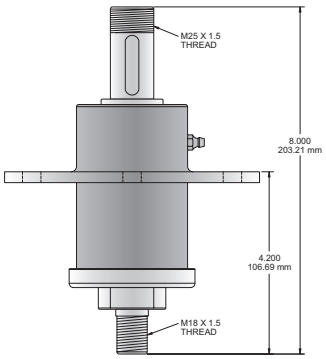

S

Spindles

OREGON Product Code

Cub Cadet (see also MTD)

82-405

Replaces

918-0427C	918-0324	618-0427C
918-0427	618-0324	618-0427
618-0427A	918-0427A	618-0324A

Description

- Fits 1170, 1600, 1800, & RZT mowers with 42" decks using star hole blades
- Use with Oregon 45-259 bearing & 85-044 spindle shaft

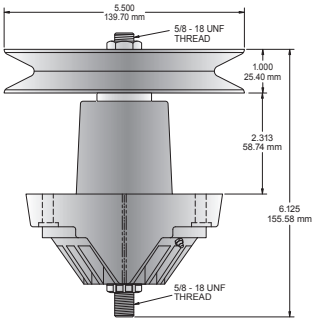

82-409

Replaces

918-0660	618-0660

Description

- Fits LT1045, LT1046, & i1046 with 46" decks using star hole blades
- Use with Oregon 45-259 bearing

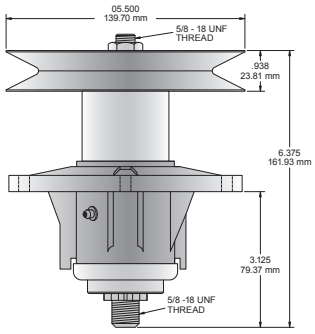

82-408

Replaces

918-0659	618-0624
618-0659	918-0624

Description

- Fits LT1040, LT1042 & RZT with 42" decks using star hole blades
- Use with Oregon 45-259 bearing & 85-044 spindle shaft

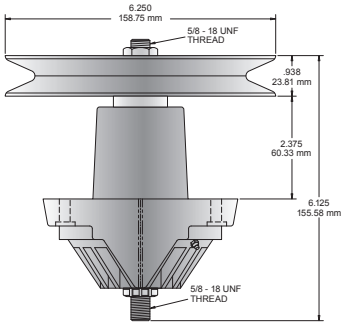

82-411

Replaces 918-3129C, 618-3129A, 618-3129B, 918-3129A, 918-3129B, 618-3129, 618-3129C, 918-3129

Description

- Fits Z-Force, GT series, & LT series mowers with 38" & 42" deck using round hole blade
- Use with Oregon 45-205 bearing & 45-206 race

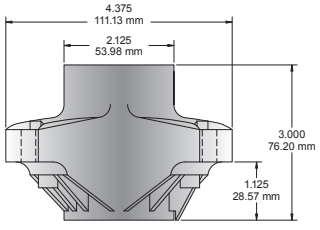

S

IMPORTANT: When installing spindles, follow all installation and maintenance instructions provided in the mowers owner/maintenance manual—including the correct torquing of the blade and pulley bolts/nuts as well as the lubrication of the spindle. Failure to do so may cause premature failure.

OREGON Product Code

Cub Cadet (see also MTD)

82-044

Replaces
918-3167 618-3167

Description
- Fits some 38" decks

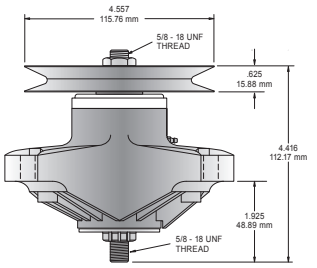

82-401

Replaces
918-04123B 618-04123B

Description
- Fits LT series mowers with 46" deck
- Round blade center hole
- Use with Oregon 45-205 bearing & 45-206 race

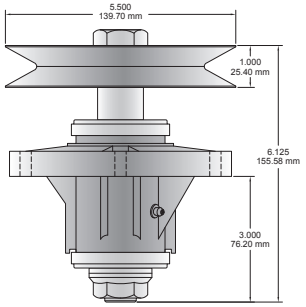

82-402

Replaces
918-04124A 618-04124A

Description
- Fits LT series mowers with 42" deck using round hole blade
- Use with Oregon 45-205 bearing & 45-206 race

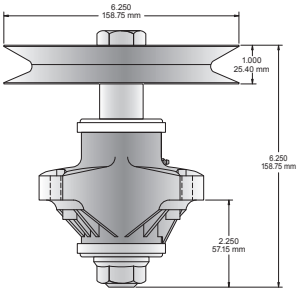

82-403

Replaces
918-04126A 918-04126 618-04125
618-04126A 618-04126 918-04125

Description
- Fits i1050, LT, SLT & RZT mowers with 50" deck using star center hole blade
- Use with Oregon 45-259 bearing

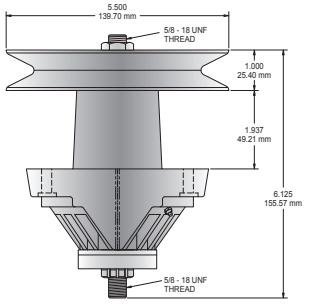

82-412

Replaces
918-04129 618-04129

Description
- Fits LT1000 series 50' decks using round center hole blade
- Use with Oregon® 45-205 bearing & 45-206 race

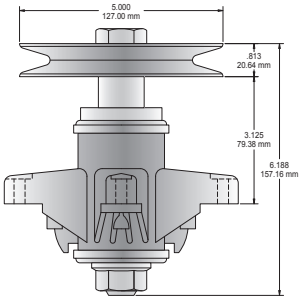

IMPORTANT: When installing spindles, follow all installation and maintenance instructions provided in the mowers owner/maintenance manual—including the correct torquing of the blade and pulley bolts/nuts as well as the lubrication of the spindle. Failure to do so may cause premature failure.

S

Spindles

OREGON Product Code

Cub Cadet (see also MTD)

82-406

Replaces

618-04394	918-04394
618-04426	918-04426

Description

- Fits Z-Force mowers with 48" thru 60" deck using round hole blade. Use with Oregon 45-205 bearing & 45-206 race

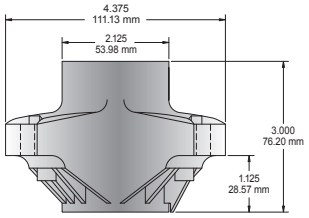

82-407

Replaces

918-04461	618-04456
618-04461	918-04456

Description

- Fits LT series mowers with 42" deck using star hole blade
- Use with Oregon 45-259 bearing & 85-047 spindle shaft

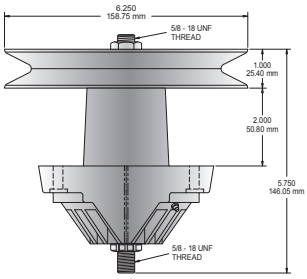

82-058

Replaces

918-04822A	918-04889	618-04889A
918-04822	618-04822A	618-04889
918-04889A	618-04822	

Description

- Fits mower models CC30 Mini Rider (2014), LTX1040 (2011–2014), LTX1042 (2012–2014), LTX1045 (2011), RZT-42, RZT-L42, & RZT-S42 (2011–2014)
- For star center hole blades

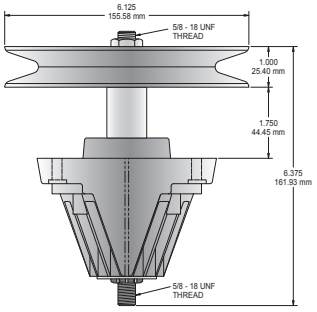

82-043

Replaces

918-05016	918-04825
618-05016	618-04825B

Description

- Fits models LTX1050 with 50" deck (2011-2013)

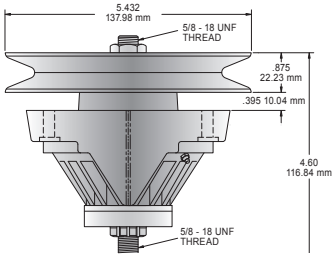

82-130 – NEW

Replaces

918-05137

Description

- Fits Cub CadetRZT-S54, MTD Z6600 & ZT-L54, Toro 13AX90RS848 & 13AX91RS848, Troy-Bilt Mustang 54 XP
- Height: 6-15/16", pulley outer diameter: 5-11/16"
- 6 pt. star blade mount

S

IMPORTANT: When installing spindles, follow all installation and maintenance instructions provided in the mowers owner/maintenance manual—including the correct torquing of the blade and pulley bolts/nuts as well as the lubrication of the spindle. Failure to do so may cause premature failure.

OREGON Product Code

Cub Cadet (see also MTD)

82-128 – NEW

Replaces
918-04865A

Description
- Fits Cub Cadet LTX1045, LTX1046 & Z-force S 46; MTD 13AL771T004, 13AL78ST099, 13AL78ST299, 13AL795T004, 13AL795T057, 13AO785T058, 13AR91PT099, 13AR91PT299, 13AT915T004, 13AX771T004, 13AX791T031, 13AX90YT001, 13AX915T004, & 13WX791T031
- Height: 6", pulley outer diameter: 6-1/2"
- 6 pt. star blade mount
- Pulley and grease zerk included

82-127 – NEW

Replaces
918-06989

Description
- Fits MTD13AL78XT099, 13AL78XT299, & 13AL78XT055; Troy-Bilt TB46 & Horse XP
- Height: 6-3/4", pulley outer diameter: 6-1/4"
- Includes nut, spacer, & pulley.
- 6 pt. star blade mount
- No threads in housing, use self-tapping screws

82-132 – NEW

Replaces
918-05078A

Description
- Fits Cub Cadet RZT-S46, MTD ZT-S46; Troy-Bilt Mustang XP 46 & Mustang Pivot S 46
- Height: 7-1/4" height, pulley outer diameter: 6-7/16"
- 6 pt. star blade mount

82-104 – NEW

Replaces

618-06976	918-06976
618-06976A	918-06976A

Description
- Fits Cub Cadet LT42, LT42C, & LX42 with 42" deck; MTD 131PA1ZS099, CYT4220, & CYT4220SE with 42" deck
- Thread: 5/8"-18 UNG
- 6 pt. star blade mount
- Height: 6-3/16", pulley outer diameter: 5-1/2"

S

IMPORTANT: When installing spindles, follow all installation and maintenance instructions provided in the mowers owner/maintenance manual—including the correct torquing of the blade and pulley bolts/nuts as well as the lubrication of the spindle. Failure to do so may cause premature failure.

Spindles

OREGON Product Code

Cub Cadet (see also MTD)

82-105 – NEW

Replaces
918-06977
918-06977A

Description
- Fits Cub Cadet LT46 & LX46 with 46" deck; MTD 131AQ1ZT099, 13AQA1ZT299, & CYT4622SE with 46" deck
- Thread: 5/8"-18 UNG
- 6 pt. star blade mount
- Height: 6-1/4", pulley outer diameter: 6-1/4"

82-106 – NEW

Replaces
618-06981
918-06981

Description
- Fits Cub Cadet XT1-LT50 & XT2-LX50 with 50" deck; MTD CYT5023SE with 50" deck
- Thread: 5/8"-18 UNG
- 6 pt. star blade mount
- Height: 6", pulley outer diameter: 5"

82-110 – NEW

Replaces

618-04456	918-04456	918-04461
618-04456A	918-04456A	918-04461A
618-04461	918-04456B	Toro 112-0460

Description
- Fits Cub Cadet LT1042; MTD Newer 700 series with 42" deck; Toro LX420 & LX425 (2006–2007)
- 6 pt. star blade mount
- Height: 5-3/4", pulley outer diameter: 6-1/4"

S

IMPORTANT: When installing spindles, follow all installation and maintenance instructions provided in the mowers owner/maintenance manual—including the correct torquing of the blade and pulley bolts/nuts as well as the lubrication of the spindle. Failure to do so may cause premature failure.

OREGON Product Code

Cub Cadet (see also MTD)

82-109 – NEW

Replaces

618-04636	618-04865	918-04865A
618-04636A	618-04865A	

Description

- Fits Cub Cadet LTX1045, LTX1046, & Z-force S 46; MTD 13AL771T004, 13AL78ST099, 13AL78ST299, 13AL795T004, 13AL795T057, 13AO785T058, 13AR91PT099, 13AR91PT299, 13AT915T004, 13AX771T004, 13AX791T031, 13AX90YT001, 13AX915T004, & 13WX791T031
- 6 pt. star blade mount
- Pulley and grease zerk included
- Height: 6", pulley outer diameter: 6-1/2"

Dixie Chopper

82-322

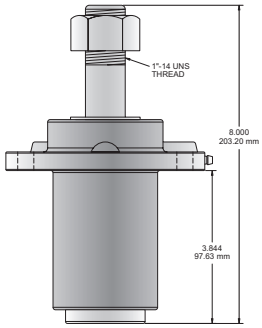

Replaces
10161

Description

- Fits 50" & 60" rider
- LH & RH Spindle
- Use with Oregon® bearing 45-263

82-323

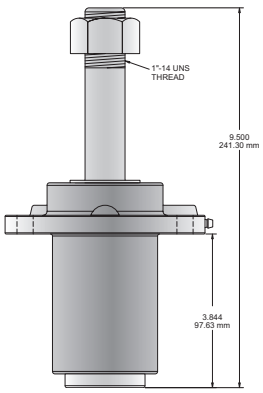

Replaces
10161-L

Description

- Long shaft
- Fits 50" & 60" rider
- Center spindle
- Use with Oregon bearing 45-263

Dixon

82-340

Replaces
8340

Description

- RH on 42" deck
- Use with Oregon 45-225 bearings

IMPORTANT: When installing spindles, follow all installation and maintenance instructions provided in the mowers owner/maintenance manual—including the correct torquing of the blade and pulley bolts/nuts as well as the lubrication of the spindle. Failure to do so may cause premature failure.

Spindles

OREGON Product Code

Dixon

82-341

Replaces
8398

Description
- LH on 42" deck
- Use with Oregon 45-225 bearings

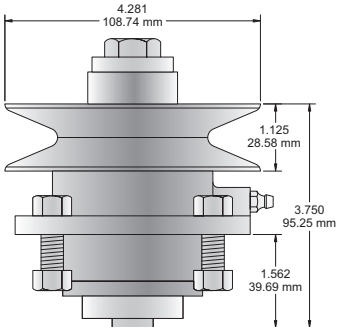

82-342

Replaces
8399

Description
- Center for 42" decks
- Use with Oregon® 45-225 bearings

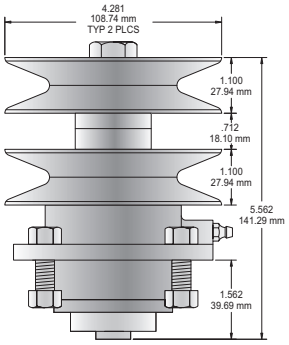

Excel

82-021

Replaces
350595

Description
- Fits Super Z with 52", 60", & 72" decks, cast iron housing, used before serial number 05011098
- Use with Oregon 45-225 bearings

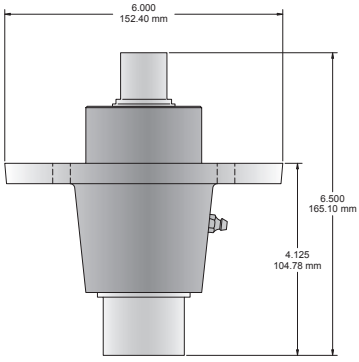

Exmark

82-318

Replaces
634972

Description
- For Laser Z 60" deck serial numbers 252,000 & up
- Use with Oregon 45-225 bearings

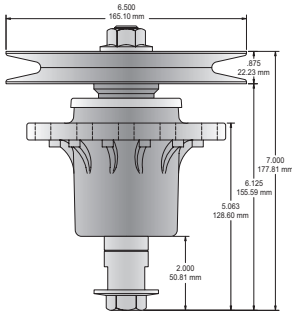

S

IMPORTANT: When installing spindles, follow all installation and maintenance instructions provided in the mowers owner/maintenance manual—including the correct torquing of the blade and pulley bolts/nuts as well as the lubrication of the spindle. Failure to do so may cause premature failure.

OREGON Product Code

Exmark

82-344

Replaces
103-1140

Description
- Fits 60" decks on Lazer Z HP models serial numbers 260,000 to 351,999
- Use with Oregon 45-263 bearings

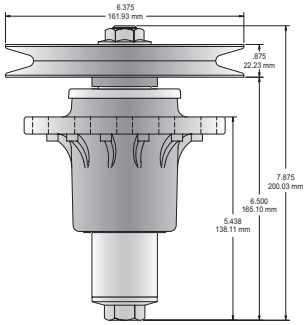

82-346

Replaces
103-1184

Description
- Fits 52" decks on Lazer Z HP models serial numbers 260,000 to 369,999
- Use with Oregon® 45-263 bearings

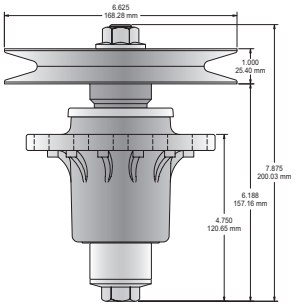

82-347

Replaces
103-3200 103-8323 103-8075

Description
- Fits 60" decks on Lazer Z, XP series models serial numbers 352,000 to 539,999
- Use with Oregon 45-263 bearings

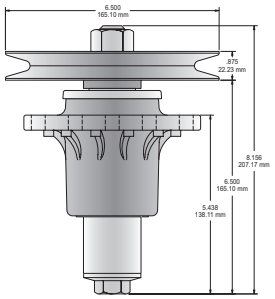

82-348

Replaces
103-3206

Description
- Fits 72" decks on Lazer Z. XP series models, serial numbers 352,000 to 539,999
- Use with Oregon 45-263 bearings

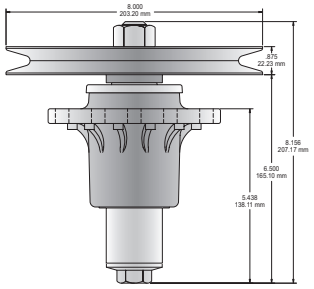

S

IMPORTANT: When installing spindles, follow all installation and maintenance instructions provided in the mowers owner/maintenance manual—including the correct torquing of the blade and pulley bolts/nuts as well as the lubrication of the spindle. Failure to do so may cause premature failure.

Spindles

OREGON Product Code

Exmark

82-349

Replaces
644092

Description
- Fits 72" deck on Lazer Z models serial numbers 260,000 to 351,999
- Use with Oregon 45-263 bearings

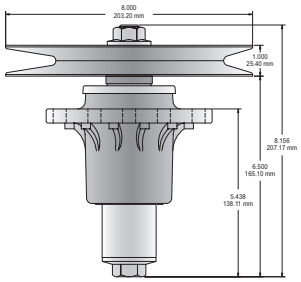

82-022

Replaces

103-2547	103-8280
1-513016	1-634619

Description
- Fits newer models Lazer Z, Metro, Viking, Turf Trace, & Turf Ranger decks
- Bearings & spacers included, use with Oregon 45-263 bearing
- Pulley & shaft are **not** included

82-056

Replaces
103-9539

Description
- Fits Lazer XS Air Cooled (S/N 790,000 & up), Lazer Z AC, Lazer Z HP, Lazer Z XS Air Cooled, Lazer Z XS Diesel, Lazer Z XS Liquid Cooled (S/N 600,000 & up), LZDS902K, LZD25KD605, LZDKD725, LZS29PKA606, LZX23KC486, LZX23KC486, LZX24KA526, LZX27KC526, LZX27KC606, LZX29EKC606, LZX29KA606, LZX34KC606, LZX34KC726, LZX38KC606, LZX34KC726, LZX38KC606, LZX38KC726 (S/N 920,000 & up), LZX801KA606, LZX740KC526, LZX740KC606, LZX980KC726, LZX980KC606, LZX940KC606, LZX749EKC606, LZX680KC486 (S/N 312,000,000 & up), LZX980EKC726 (S/N 313,000,000 & up), & Next Lazer Z Air Cooled (S/N 850,000 & up)

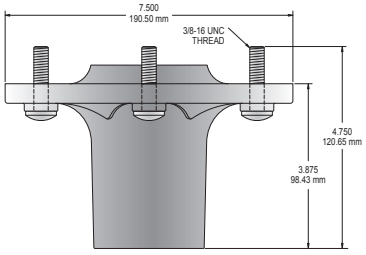

48-235

Replaces
103-3037

Description
- Splined Blade Bushing
- For mowers using blades with 15/16" center hole

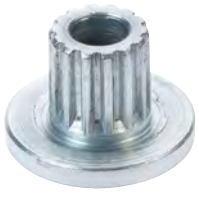

S

IMPORTANT: When installing spindles, follow all installation and maintenance instructions provided in the mowers owner/maintenance manual—including the correct torquing of the blade and pulley bolts/nuts as well as the lubrication of the spindle. Failure to do so may cause premature failure.

OREGON Product Code

Exmark

82-361

Replaces
109-2102

Description
- Fits Lazer Z with serial No. 600,000 & greater
- Includes blade & pulley mounting hardware

See *Chart A* for pulley fit-up information

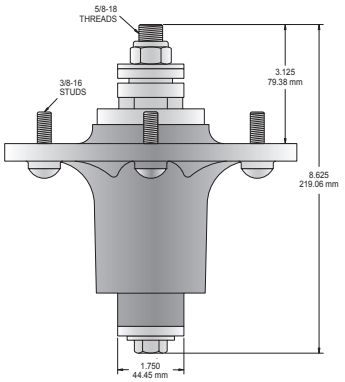

82-055

Replaces
109-6917

Description
- Fits Lazer Z with serial No. 600,000 & greater
- Simular to Oregon 82-361
  No mounting hardware

See *Chart A* for pulley fit-up information

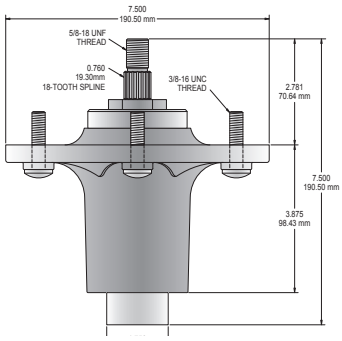

Chart A — Pulley Fit-Up for Spindle 82-361 or 82-055

Use this table to combine Oregon® 82-361 or 82-055 with an Oregon pulley.

			Deck Size:	52"	60"		66"	72"	
			OD:	6.75"	6.13"	7.25"	6.75"	6.75"	7.25"
	Mounting Hardware			Pulley No.					
Exmark Model	Yes	No		44-505	44-506	44-502	44-504	44-501	44-503
Lazer XS Air Cooled S/N 850,000 & Up	82-361	82-055			●		●		●
Lazer Z XS Air Cooled S/N 790,000 & Up	82-361	82-055			●		●		●
Lazer Z XS Diesel Mowers S/N 790,000 & Up	82-361	82-055			●		●		●
LZD25KD605 S/N 920,000 & Up	82-361	82-055			●				
LZD25KD725 S/N 920,000 & Up	82-361	82-055							●
LZDS902K605 S/N 312,000,000 & Up	82-361	82-055			●				
LZDS902K605 S/N 313,000,000 & Up	82-361	82-055			●				
LZDS902K60RD S/N 313,000,000 & Up	82-361	82-055				●			
LZDS902K725 S/N 312,000,000 & Up	82-361	82-055							●
LZDS902K725 S/N 313,000,000 & Up	82-361	82-055							●
LZDS902K72RD S/N 313,000,000 & Up	82-361	82-055						●	
LZS29PKA606 S/N 920,000 & Up	82-361	82-055				●			
LZX23KC486 S/N 920,000 & Up	82-361	82-055							
LZX24KA526 S/N 920,000 & Up	82-361	82-055		●					
LZX24KA526CA S/N 920,000 & Up	82-361	82-055		●					
LZX27KC526 S/N 920,000 & Up	82-361	82-055		●					
LZX27KC526CA S/N 920,000 & Up	82-361	82-055		●					
LZX27KC606 S/N 920,000 & Up	82-361	82-055				●			
LZX27KC606CA S/N 920,000 & Up	82-361	82-055				●			
LZX29EKC606 S/N 920,000 & Up	82-361	82-055				●			

IMPORTANT: When installing spindles, follow all installation and maintenance instructions provided in the mowers owner/maintenance manual—including the correct torquing of the blade and pulley bolts/nuts as well as the lubrication of the spindle. Failure to do so may cause premature failure.

S

Spindles

Chart A — Pulley Fit-Up for Spindle 82-361 or 82-055

Use this table to combine Oregon® 82-361 or 82-055 with an Oregon pulley.

			Deck Size:	52"	60"		66"	72"	
			OD:	6.75"	6.13"	7.25"	6.75"	6.75"	7.25"
	Mounting Hardware			Pulley No.					
Exmark Model	Yes	No		44-505	44-506	44-502	44-504	44-501	44-503
LZX29EKC606CA S/N 920,000 & Up	82-361	82-055				●			
LZX29EKC606SS S/N 920,000 & Up	82-361	82-055				●			
LZX29KA606 S/N 920,000 & Up	82-361	82-055				●			
LZX29KA606SS S/N 920,000 & Up	82-361	82-055				●			
LZX34KC606 S/N 920,000 & Up	82-361	82-055				●			
LZX34KC606SS S/N 920,000 & Up	82-361	82-055				●			
LZX34KC726 S/N 920,000 & Up	82-361	82-055						●	
LZX34KC726SS S/N 920,000 & Up	82-361	82-055						●	
LZX38KC606 S/N 920,000 & Up	82-361	82-055				●			
LZX38KC606CA S/N 920,000 & Up	82-361	82-055				●			
LZX38KC606SS S/N 920,000 & Up	82-361	82-055				●			
LZX38KC726 S/N 920,000 & Up	82-361	82-055						●	
LZX38KC726CA S/N 920,000 & Up	82-361	82-055						●	
LZX38KC726SS S/N 920,000 & Up	82-361	82-055						●	
LZX680KC486 S/N 312,000,000 & Up	82-361	82-055							
LZX740EKC526 S/N 313,000,000 & Up	82-361	82-055		●					
LZX740KC526 S/N 312,000,000 & Up	82-361	82-055		●					
LZX740KC606 S/N 312,000,000 & Up	82-361	82-055				●			
LZX740KC606CA S/N 312,000,000 & Up	82-361	82-055				●			
LZX749EKC606 S/N 312,000,000 & Up	82-361	82-055				●			
LZX801KA606 S/N 312,000,000 & Up	82-361	82-055				●			
LZX801KA606 S/N 313,000,000 & Up	82-361	82-055				●			
LZX801KA606SS S/N 312,000,000 & Up	82-361	82-055				●			
LZX940EKC606 S/N 313,000,000 & Up	82-361	82-055				●			
LZX940KC606 S/N 312,000,000 & Up	82-361	82-055				●			
LZX940KC726 S/N 312,000,000 & Up	82-361	82-055						●	
LZX980EKC726 S/N 313,000,000 & Up	82-361	82-055						●	
LZX980KC606 S/N 312,000,000 & Up	82-361	82-055				●			
LZX980KC606 S/N 313,000,000 & Up	82-361	82-055				●			
LZX980KC726 S/N 312,000,000 & Up	82-361	82-055						●	
LZX980KC726 S/N 313,000,000 & Up	82-361	82-055						●	
Next Lazer Z Air Cooled S/N 790,000 & Up	82-361	82-055		●		●		●	
Next Lazer Z Air Cooled S/N 850,000 & Up	82-361	82-055		●		●		●	
Next Lazer Z Propane S/N 850,000 & Up	82-361	82-055				●			

Exmark

82-101 – NEW

Replaces
120-6234

Description

- Fits ECKA30; Toro 30" TimeMaster
- Height: 4"

S

OREGON Product Code

Exmark

82-102 – NEW

Replaces
116-3344

Description
- Cutter housing with bearings
- Fits Lazer Z E-Series, Pioneer S-Series, Turf Tracer S-Series, & Vantage S-Series
- Height: 4-1/2"

82-103 – NEW

Replaces
126-4630

Description
- Cutter housing complete
- Fits RAE708, RAS710, RAS720, & RAS740
- Height: 4-1/2"

Ferris

82-350

Replaces
30301

Description
- Fits IS-1000Z, IS-3000Z, & IS-4000Z Hydrowalk DDS series, & Simplicity ZT2148 & ZT2350 models
- Use with Oregon® 45-220 bearings

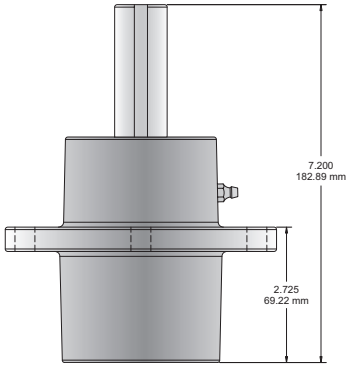

Can't find what you're looking for?
Try us online to search the latest products available.

OregonProducts.com

S

IMPORTANT: When installing spindles, follow all installation and maintenance instructions provided in the mowers owner/maintenance manual—including the correct torquing of the blade and pulley bolts/nuts as well as the lubrication of the spindle. Failure to do so may cause premature failure.

Spindles

OREGON Product Code

Grasshopper

82-351

Replaces
623781

Description
- Fits left & right on 52" & 61" decks on models 9852 & 9861
- Includes mounting hardware
- Use with Oregon 45-220 bearings

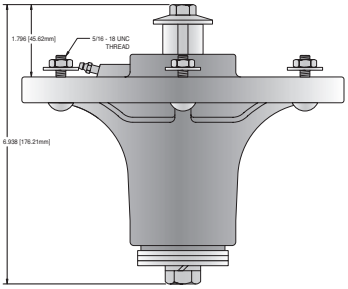

82-352

Replaces
623782

Description
- Fits center of 52" & 61" decks on 9652 & 9661 models
- Includes mounting hardware
- Use with Oregon 45-220 bearings

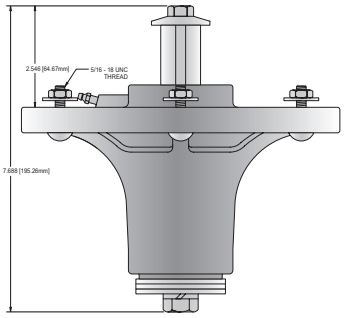

Gravely

82-040

Replaces
51510000

Description
- Spindle assembly
- Fits ZT series riders
- Use with Oregon 45-002

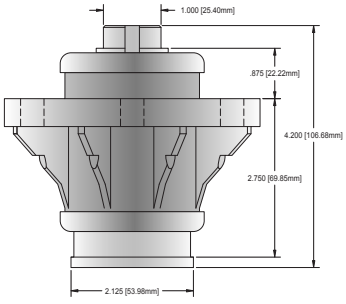

82-041

Replaces
59201000

Description
- Spindle assembly
- Fits PM series riders
- RH & LH spindle
- Use with Oregon® 45-263 bearings

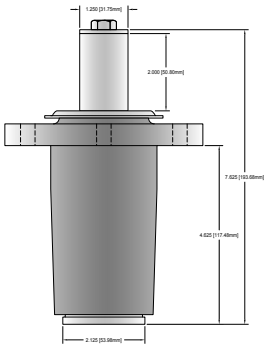

S

IMPORTANT: When installing spindles, follow all installation and maintenance instructions provided in the mowers owner/maintenance manual—including the correct torquing of the blade and pulley bolts/nuts as well as the lubrication of the spindle. Failure to do so may cause premature failure.

OREGON Product Code

Gravely

82-042

Replaces
59202600 59225700

Description
- Spindle assembly
- Fits PM series riders
- Center spindle
- Use with Oregon 45-263 bearings

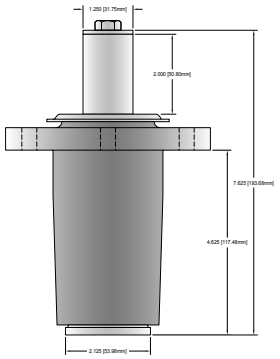

Great Dane, Gilson, Lawn Boy

82-328

Replaces
Great Dane D18030

Description
- Use with Oregon 45-220 bearings

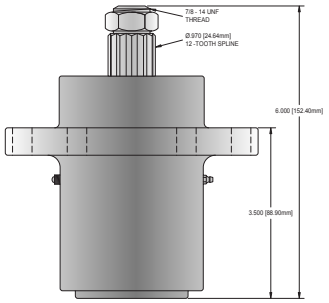

82-013

Replaces
Gilson 241013 Lawn Boy 741311
Gilson 88272 Lawn Boy 741310
Gilson 88213 Lawn Boy 706623
Lawn Boy 742577

Description
- For 38" cut, side discharge, single-bolt mount blades
- Overall height 5-3/16"
- Blade saddle: 2-1/2"

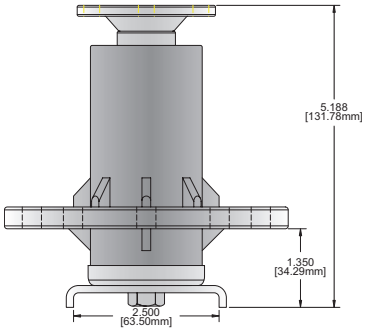

John Deere

82-332

Replaces
AM108925

Description
- For 38" deck on LX & GT series tractors
- Use with Oregon® 45-295 bearings

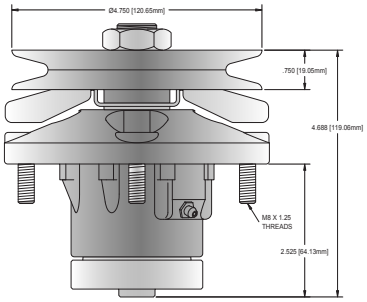

IMPORTANT: When installing spindles, follow all installation and maintenance instructions provided in the mowers owner/maintenance manual—including the correct torquing of the blade and pulley bolts/nuts as well as the lubrication of the spindle. Failure to do so may cause premature failure.

Spindles

OREGON Product Code

John Deere

82-333

Replaces
AM121342

Description
- For 48" & 54" deck on LX & GT series tractors
- Use with Oregon 45-259 bearings

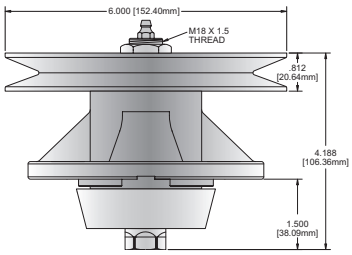

82-354

Replaces
AM124511

Description
- Fits 38" decks on STX38
- Use with Oregon 45-257 bearings

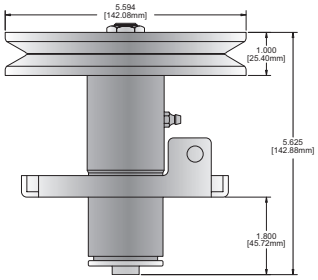

82-355

Replaces
AM126226

Description
- Fits 46" decks on LT166 lawn tractors
- Use with Oregon 45-257 bearings

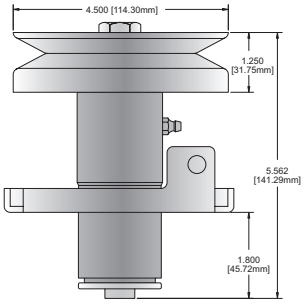

82-358

Replaces
AM136733

Description
- Fits X300 & EZ Trak mowers
- Use with Oregon 45-257 bearings

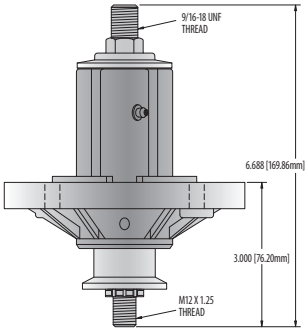

82-356

Replaces
GY20050

Description
- Fits L-100, L-110, L-120, & L-130 models with 42" & 48" decks, & current Home Depot models
- Use with Oregon® 45-257 bearings

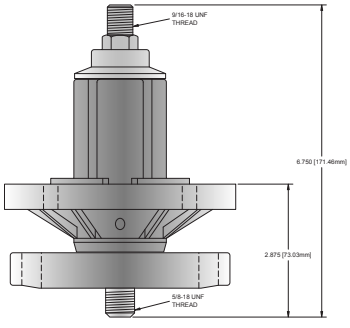

S

IMPORTANT: When installing spindles, follow all installation and maintenance instructions provided in the mowers owner/maintenance manual—including the correct torquing of the blade and pulley bolts/nuts as well as the lubrication of the spindle. Failure to do so may cause premature failure.

OREGON Product Code

John Deere

82-360

Replaces
GY20867

Description
- Fits LA150, G110, & 190C mowers with 54" deck
- Use with Oregon 45-257 bearings

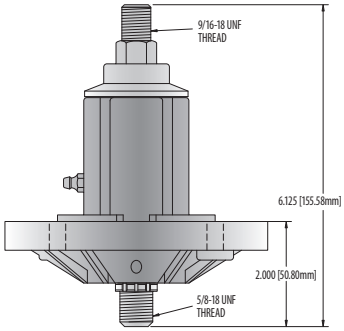

82-359

Replaces
GY20962 GY21098 GY20454

Description
- Fits 100 series mowers with 42" & 48" decks
- Use with Oregon 45-257 bearings

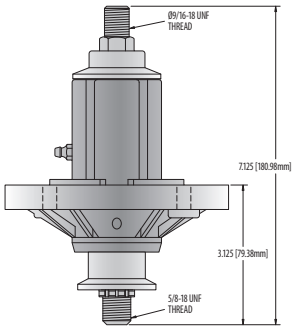

MTD (see also Cub Cadet)

82-500

Replaces
717-0906A 917-0906A

Description
- For 38" & 42" model series 600 & 805, & 42" model series 700-739 & 750-769 (1991–1996)
- Shaft length: 5-7/16"
- Use with Oregon 45-259 bearing

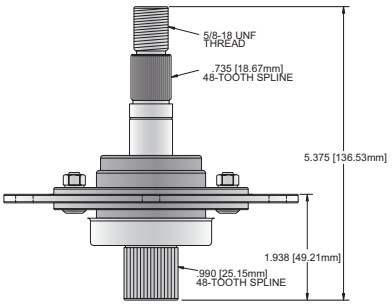

82-500-B **Bulk Pack:** 252 of Oregon 82-500

45-135

Replaces
15296A

Description
- Open bearing cup for deck spindles
- Use with Oregon® 82-500, 82-502, & 82-503

S

IMPORTANT: When installing spindles, follow all installation and maintenance instructions provided in the mowers owner/maintenance manual—including the correct torquing of the blade and pulley bolts/nuts as well as the lubrication of the spindle. Failure to do so may cause premature failure.

Spindles

OREGON Product Code

MTD (see also Cub Cadet)

45-108

Replaces
08253B

Description
- Bearing housing for Oregon 82-932, bottom bearing housing for 82-500, 82-501, 82-502, & 82-503
- 32" thru 42" cut

82-501

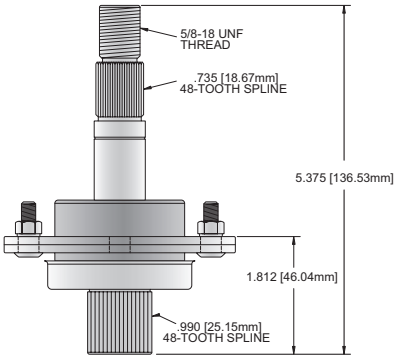

Replaces
717-0900 917-0900A

Description
- For 36", 38" & 39" cut tractors (1991–1997)
- Shaft length 5-7/16"
- Use with Oregon 45-259 bearings

82-502

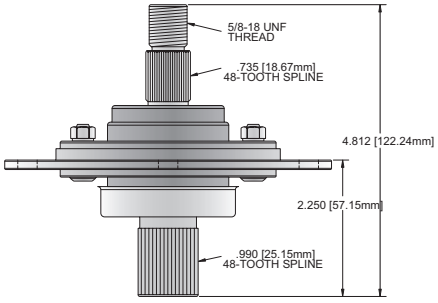

Replaces
717-0912 917-0912

Description
- For 44" cut, outer spindle, 46" cut, center & right-hand spindle on 800 to 849 series H, deep deck (1988-1992)
- Shaft length: 4-15/16"
- Use with Oregon 45-259 bearing

45-135

Replaces
15296A

Description
- Open bearing cup for deck spindles
- Fits Oregon 82-500, 82-502, & 82-503

S

IMPORTANT: When installing spindles, follow all installation and maintenance instructions provided in the mowers owner/maintenance manual—including the correct torquing of the blade and pulley bolts/nuts as well as the lubrication of the spindle. Failure to do so may cause premature failure.

OREGON Product Code

MTD (see also Cub Cadet)

82-503

Replaces
717-0913 917-0913

Description
- For 44" cut, center double pulley & 46" cut, left hand spindle
- Fits 800-849 series H (1988-1992)
- Shaft length 6-5/16"
- Use with Oregon® 45-259 bearings

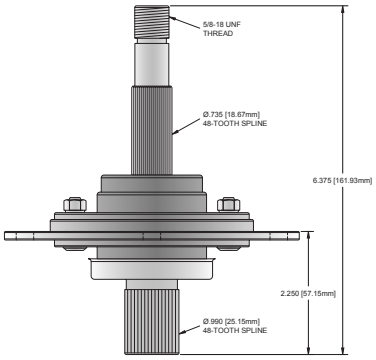

45-135

Replaces
15296A

Description
- Open bearing cup for deck spindles
- Fits Oregon 82-500, 82-502, & 82-503

82-511

Replaces
618-0117 918-0117
618-0112 Oregon 82-504

Description
- For 46" deck
- Blades with star hole
- Uses double pulley
- LH Spindle for 800 series (1996 & older)
- Use Oregon 45-259 bearing
- Use Oregon spindle shaft 85-053

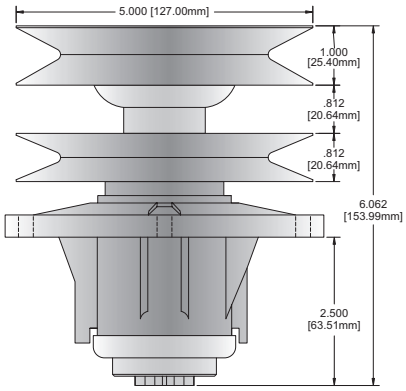

82-512

Replaces
618-0111 618-0116 918-0116

Description
- For 46" deck with single pulley (1993–1996), (3) for 600 series riders & (2) at the RH & center positions for 800 series riders
- For star hole blades
- Use with Oregon 45-259 bearing & 44-102 pulley

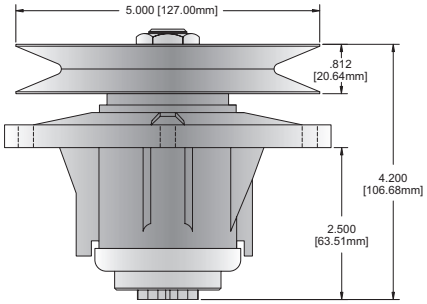

S

Spindles

OREGON Product Code

MTD (see also Cub Cadet)

82-513-2

Replaces

618-0138 618-0142 918-0142

Description

- Fits 38" & 42" decks with newest style "X" housing (1998 & newer)
- For star hole blades
- Does not come with a pulley
- Use Oregon® 45-259 bearings, 85-048 spindle shaft, & 44-102 pulley (38" deck) or 44-369 pulley (42" deck)

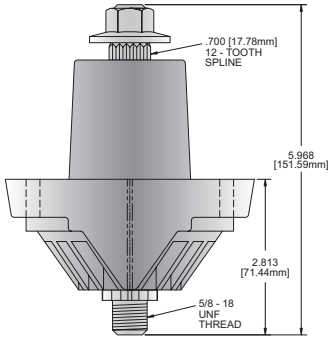

82-515

Replaces

618-0240 918-0240 618-0430A

Description

- Fits center & RH on 46" deck, 600 & 800 series riders (1997 & newer), (3) for 600 series, (2) 82-215 & (1) 82-516 for 800 series
- Fits star hole blades
- Use with Oregon 45-259 bearings, 85-049 spindle shaft, & 44-102 pulley

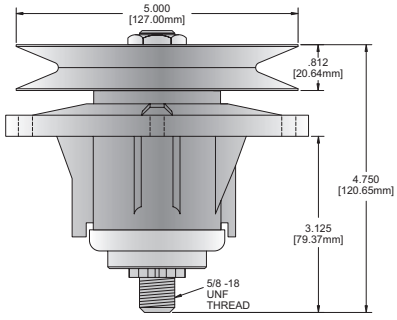

82-516

Replaces

618-0241 918-0241 918-0431B
618-0431 918-0431A 918-0431C

Description

- Fits left hand side on 46" deck, 800 series (1997 & newer)
- For star hole blades
- Use Oregon 45-259 bearings & 85-051 spindle shaft

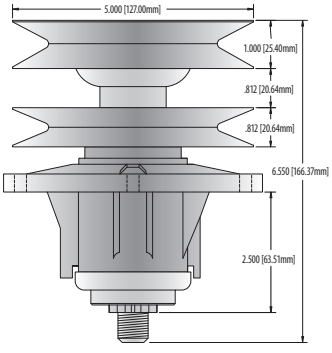

82-517

Replaces

918-0574 618-0565

Description

- Spindle assembly
- Fits later model 42" deck, 600 series
- For star hole blades
- Use with Oregon 45-259 bearings & 85-052 spindle shaft

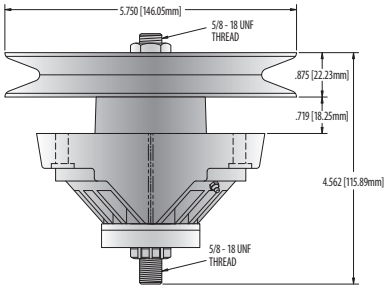

S

IMPORTANT: When installing spindles, follow all installation and maintenance instructions provided in the mowers owner/maintenance manual—including the correct torquing of the blade and pulley bolts/nuts as well as the lubrication of the spindle. Failure to do so may cause premature failure.

OREGON Product Code

MTD (see also Cub Cadet)

82-520

Replaces
918-0596

Description
- For Model 13AQ617, 13AT618, & 13AG619 with 48 " deck

82-518

Replaces
918-0595 618-0595

Description
- Spindle assembly
- Fits later model 46" deck, 800 series double pulley
- For star hole blades
- Use with Oregon® 45-259

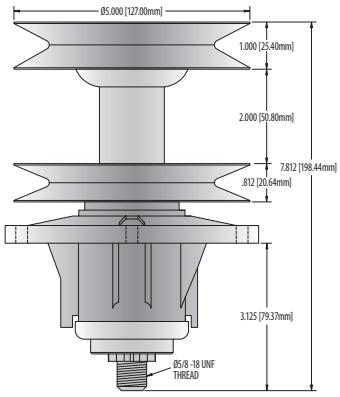

82-519

Replaces
918-0671

Description
- Spindle assembly
- For 54" decks, 800 series with star hole blades
- Use with Oregon 45-259 & 85-050 spindle shaft

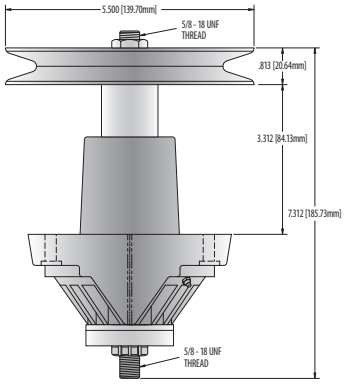

82-044

Replaces
918-3167 618-3167

Description
- Fits some 38" decks

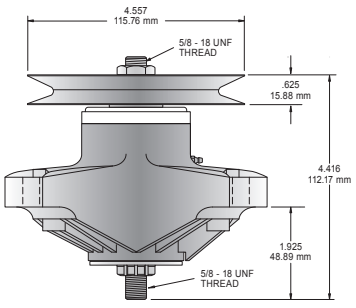

S

IMPORTANT: When installing spindles, follow all installation and maintenance instructions provided in the mowers owner/maintenance manual—including the correct torquing of the blade and pulley bolts/nuts as well as the lubrication of the spindle. Failure to do so may cause premature failure.

Spindles

OREGON Product Code

MTD (see also Cub Cadet)

82-051

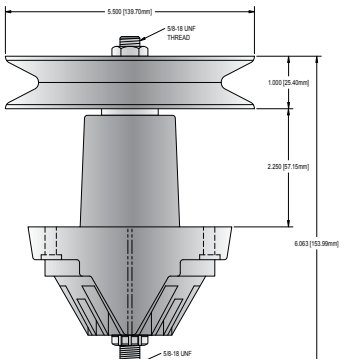

Replaces

918-04197A	918-0427C	618-0427C
918-04197	918-0427D	618-0427A
918-0427	918-0324	618-04197A
918-0427A	618-0427D	618-0324A

Description

- Fits models 13AR608G, 13AT604G, 13AX604G, 13AX604G (1999), 13AD604G (1999–2000), 13A1762F, 13AH762F, 13AM762F (2006), 13AO616G, LT-1650 (2000–2001), ZT-17, 17AA5A4G (2004), 17BA554G, 13A1760F, 13A3760F, 13AM771F (2005), 13AC762F, 13AH762F, 13AM762F (2005–2006), 13AG619H, 13AI608G, 13AK604G, 13AK608G, 13AS608G, 13AT618G, 13AU618H, 13BR609G (2000), ZT-42 (2005–2008), 13A1762F, 13A3762F, 17AA554G (2006), & 17AA5AAG (2008)
- For star center hole blades

82-054

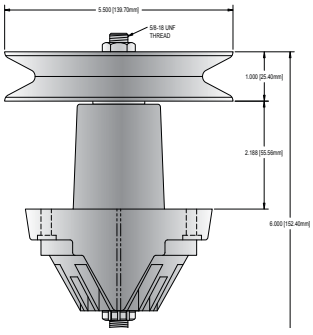

Replaces

918-04474A	918-04495	618-04495A
918-04474	618-04474A	618-04495
918-04495A	618-04474	

Description

- Fits 38" decks, 700 series F deck (2007–2013)
- For star center hole blades

82-058

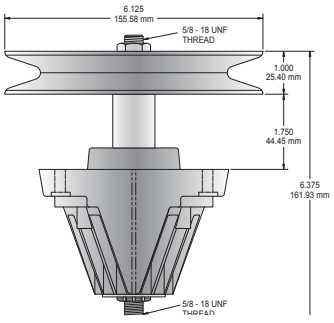

Replaces

918-04822A	918-04889	618-04889A
918-04822	618-04822A	618-04889
918-04889A	618-04822	

Description

- Fits mower models 13A226JD, 13A2775S, 13A277SS, 13A2785S, 13AC26JD, 13AD775S, 13AJ771S, 13AJ775S, 13AJ77SS, 13AJ78SS, 13AJ795S, 13AL78SS, 13AL79SS, 13AM772S, 13AM775S, 13AM77LS, 13AN771S, 13AN772S, 13AN775S, 13AN77SS, 13AN785S, 13AN795S, 13AO772S, 13AO785S, 13AP91GS, 13AV90GS, 13AV91GS, 13AX771S, 13AX78TS, 13AX795S, 13B226JD, 13BJ78SS, 13BM772S, 13RM772S, 13W2771S, 13W2775S, 13WJ771S, 13WV771S, 13WX78TS, 17AC2ACS, 17AF2ACS, 17AFCACS, 17AKCACS, & 17AK2ACS (2010–2014)
- For star center hole blades

S

IMPORTANT: When installing spindles, follow all installation and maintenance instructions provided in the mowers owner/maintenance manual—including the correct torquing of the blade and pulley bolts/nuts as well as the lubrication of the spindle. Failure to do so may cause premature failure.

OREGON Product Code

MTD (see also Cub Cadet)

82-043

Replaces

918-05016	918-04825
618-05016	618-04825B

Description

- Fits model 138AQ91 with 50" deck (2012)

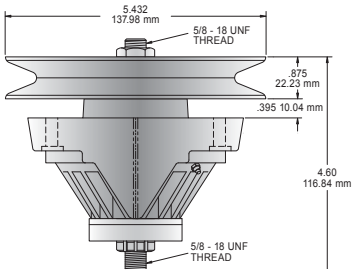

04-015 912-0417A **Pulley Nut**
Fits most MTD spindles

82-127 – NEW

Replaces
918-06989

Description

- Fits 13AL78XT099, 13AL78XT299, & 13AL78XT055; Troy-Bilt TB46 & Horse XP
- Height: 6-3/4", pulley outer diameter: 6-1/4"
- 6 pt. star blade mount
- No threads in housing, use self-tapping screws
- Includes nut, spacer, and pulley

82-128 – NEW

Replaces
918-04865A

Description

- Fits Cub Cadet LTX1045, LTX1046, and Z-force S 46; MTD 13AL771T004, 13AL78ST099, 13AL78ST299, 13AL795T004, 13AL795T057, 13AO785T058, 13AR91PT099, 13AR91PT299, 13AT915T004, 13AX771T004, 13AX791T031, 13AX90YT001, 13AX915T004, & 13WX791T031
- Height: 6" height, pulley outer diameter: 6-1/2"
- Pulley and grease zerk included
- 6 pt. star blade mount

82-130 – NEW

Replaces
918-05137

Description

- Fits Cub Cadet RZT-S54; MTD Z6600 & ZT-L54; Toro 13AX90RS848 & 13AX91RS848; Troy-Bilt Mustang 54 XP
- Height: 6-15/16", pulley outer diameter: 5-11/16"
- 6 pt. star blade mount

S

IMPORTANT: When installing spindles, follow all installation and maintenance instructions provided in the mowers owner/maintenance manual—including the correct torquing of the blade and pulley bolts/nuts as well as the lubrication of the spindle. Failure to do so may cause premature failure.

Spindles

OREGON Product Code

MTD (see also Cub Cadet)

82-131 – NEW

Replaces
918-06991

Description
- Fits most MTD 200 & 700 series mowers with 42" deck
- Height: 6-3/4", pulley outer diameter: 5-1/2"
- 6 pt. star blade mount

82-132 – NEW

Replaces
918-05078A

Description
- Fits Cub Cadet RZT-S46; MTD ZT-S46; Troy-Bilt Mustang XP 46 & Mustang Pivot S 46
- Height: 7-1/4", pulley outer diameter: 6-7/16"
- 6 pt. star blade mount

82-104 – NEW

Replaces
618-06976 918-06976
618-06976A 918-06976A

Description
- Fits Cub Cadet LT42, LT42C, & LX42 with 42" deck; MTD 131PA1ZS099, CYT4220, & CYT4220SE with 42" deck
- 6 pt. star blade mount
- Thread: 5/8"-18 UNG
- Height: 6-3/16", pulley outer diameter: 5-1/2"

82-105 – NEW

Replaces
918-06977
918-06977A

Description
- Fits Cub Cadet LT46 & LX46 with 46" deck; MTD 131AQ1ZT099, 13AQA1ZT299, & CYT4622SE with 46" deck
- 6 pt. star blade mount
- Thread: 5/8"-18 UNG
- Height: 6-1/4", pulley outer diameter: 6-1/4"

S

IMPORTANT: When installing spindles, follow all installation and maintenance instructions provided in the mowers owner/maintenance manual—including the correct torquing of the blade and pulley bolts/nuts as well as the lubrication of the spindle. Failure to do so may cause premature failure.

OREGON Product Code

MTD (see also Cub Cadet)

82-106 – NEW

Replaces
618-06981
918-06981

Description
- Fits Cub Cadet XT1-LT50 & XT2-LX50 with 50" deck; MTD CYT5023SE with 50" deck
- 6 pt. star blade mount
- Thread 5/8"-18 UNG
- Height: 6", pulley outer diameter: 5"

82-110 – NEW

Replaces

618-04456	918-04456	918-04461
618-04456A	918-04456A	918-04461A
618-04461	918-04456B	Toro 112-0460

Description
- Fits Cub Cadet LT1042; MTD Newer 700-series with 42" deck; Toro LX420 & LX425 (2006–2007)
- 6 pt. star blade mount
- Height: 5-3/4", pulley outer diameter: 6-1/4"

82-109 – NEW

Replaces

618-04636	618-04865	918-04865A
618-04636A	618-04865A	

Description
- Fits Cub Cadet LTX1045, LTX1046, and Z-force S 46; MTD 13AL771T004, 13AL78ST099, 13AL78ST299, 13AL795T004, 13AL795T057, 13AO785T058, 13AR91PT099, 13AR91PT299, 13AT915T004, 13AX771T004, 13AX791T031, 13AX90YT001, 13AX915T004, & 13WX791T031
- 6 pt. star blade mount
- Pulley and grease zerk included
- Height: 6", pulley outer diameter: 6-1/2"

S

IMPORTANT: When installing spindles, follow all installation and maintenance instructions provided in the mowers owner/maintenance manual—including the correct torquing of the blade and pulley bolts/nuts as well as the lubrication of the spindle. Failure to do so may cause premature failure.

Spindles

OREGON Product Code

Murray

82-028

Replaces
1001709MA 1001709

Description
- For 38" deck on 387002X83A, 387002X92A, 387002X92C, 387002X92D, 387002X92NA,387003X8A & 307004X48A
- Use with Oregon 65-204 blade adapter & 45-257 bearings

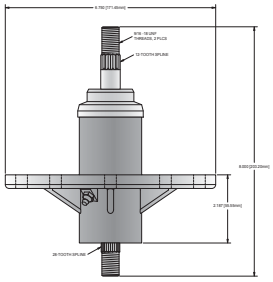

82-243

Replaces
24384 90905 492574
20551 92574

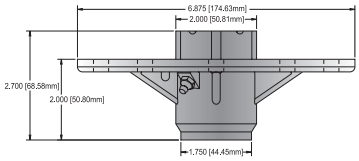

Description
- OD: 7"
- Zerk fitting
- Fits 28"–52" & 46"–52" rail frame
- GT rail frame tractors
- Use with Oregon 45-243 upper bearing, 45-242 lower bearing, & 45-250 bearing kit

82-243-B **Bulk Pack:** 330 of Oregon 82-243

82-023

Replaces
24384

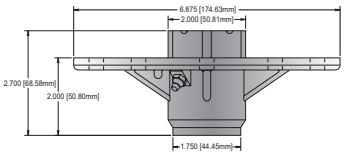

Description
- Heavy-duty version of Oregon® 82-243
- Heavier reinforced construction than OEM
- HD bearings
- OD: 7"
- Zerk fitting
- Fits 28" - 52" rail frame & 46" - 52" GT rail frame tractors
- Uses with Oregon 45-243 upper bearing & 45-242 lower bearing
- Tapped mounting holes
- Includes mounting hardware

82-023-B **Bulk Pack:** 330 of Oregon 82-023

82-250

Replaces
55962 455962

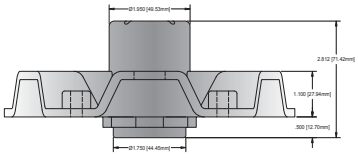

Description
- For 30" rear engine riders with new style decks
- Use with Oregon 45-243 & 45-242 bearings & 82-244 spacer

S

IMPORTANT: When installing spindles, follow all installation and maintenance instructions provided in the mowers owner/maintenance manual—including the correct torquing of the blade and pulley bolts/nuts as well as the lubrication of the spindle. Failure to do so may cause premature failure.

OREGON Product Code

Noma

82-020

Replaces
310675 779058

Description
- Double pulley, 2" saddle
- Center-to-center spacing on pulleys: 1-3/8"
- Height: 6-3/4", pulley dia.: 5-1/2"
- Use with Oregon 45-257 bearing

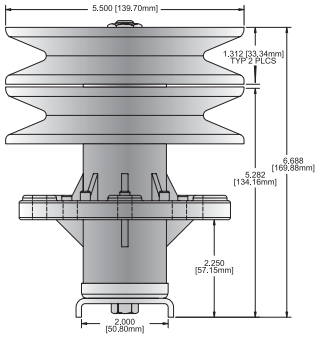

Scag

82-325

Replaces
46631

Description
- Fits all Scag mowers using cast iron spindle assemblies
- **Ships without grease – must be serviced before use!**

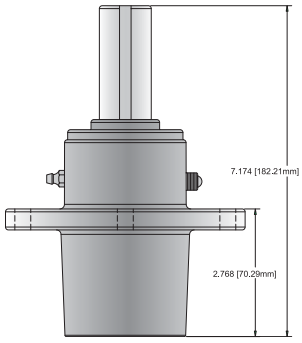

49-314

Replaces
481024

Description
- Upper grease seal
- Fits Oregon® 82-325
- OD: 2", ID: 1.50"

49-333

Replaces
481025

Description
- Lower grease seal
- Fits Oregon 82-325
- OD: 2", ID: 1.625"

Sears, Roper, Poulan

82-677

Replaces
Sears/Roper 101477 Sears/Roper 677A14
Sears/Roper 677A233

Description
- Pulley Dia: 5-1/2"
- Height: 6-7/8"
- Blade saddle 2-1/2"
- Made with brake lip
- For 36" deck
- OEM styling
- Use with Oregon 45-257 bearing

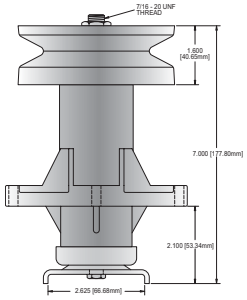

S

IMPORTANT: When installing spindles, follow all installation and maintenance instructions provided in the mowers owner/maintenance manual—including the correct torquing of the blade and pulley bolts/nuts as well as the lubrication of the spindle. Failure to do so may cause premature failure.

Spindles

OREGON Product Code

Sears, Roper, Poulan

82-678

Replaces
Sears 105891 Poulan 532-121687
Roper/AYP 121687X

Description
- Same as 82-677 with 2-1/4" blade saddle
- OEM styling
- Use with Oregon 45-257 bearing

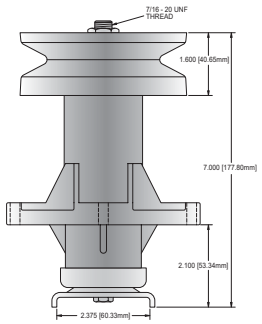

Toro

82-675

Replaces
105-1688

Description
- Fits 62 Z models
- For center spindle
- Use with Oregon 45-002 bearing
- **Ships without grease – must be serviced before use.**
- **Pulley retaining nut must be torqued at 100–120 ft/lbs. before use.**

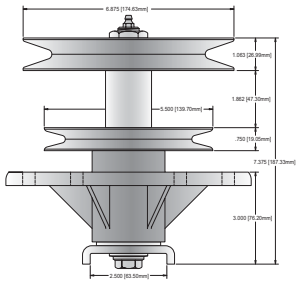

82-676

Replaces
99-4640

Description
- Fits 62 Z models
- For RH & LH Spindles
- Use with Oregon® 45-002 bearing
- **Ships without grease – must be serviced before use.**
- **Pulley retaining nut must be torqued at 100–120 ft/lbs. before use.**

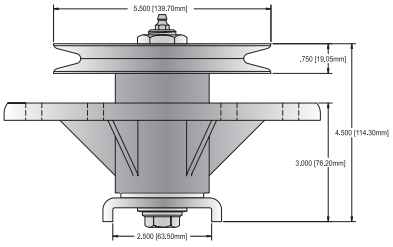

82-674

Replaces
100-3976

Description
- Fits 52 Z models
- Use with Oregon 45-002 bearing
- **Ships without grease – must be serviced before use.**
- **Pulley retaining nut must be torqued at 100–120 ft/lbs. before use.**

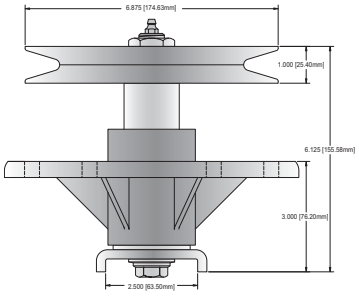

S

IMPORTANT: When installing spindles, follow all installation and maintenance instructions provided in the mowers owner/maintenance manual—including the correct torquing of the blade and pulley bolts/nuts as well as the lubrication of the spindle. Failure to do so may cause premature failure.

OREGON Product Code

Toro

82-130 – NEW

Replaces
918-05137

Description
- Fits Cub Cadet RZT-S54; MTD Z6600 & ZT-L54; Toro 13AX90RS848 & 13AX91RS848; Troy-Bilt Mustang 54 XP
- Height: 6-15/16", pulley outer diameter: 5-11/16"
- 6 pt. star blade mount

82-111 – NEW

Replaces
117-7439
117-7268

Description
- Fits Toro Time Cutter SS 5000 & SS 4200

Wright MFG

82-053

Replaces
71460007

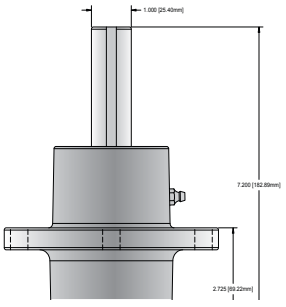

Description
- Fits large frame standers before serial number 49705 (hollow-spindle shaft)
- Does not fit small frame standers, Stander I, Stander RH, Stander X, Stander ZK, Sentar, Sport, Wright Z, & Wright ZTO

82-057

Replaces
71460022

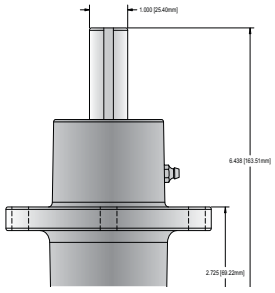

Description
- For small frame standers (hollow-spindle shaft)
- Does not fit large frame Standers, Stander I, Stander RH, Stander X, Stander ZK, Sentar, Sport, Wright Z, & Wright ZTO

S

IMPORTANT: When installing spindles, follow all installation and maintenance instructions provided in the mowers owner/maintenance manual—including the correct torquing of the blade and pulley bolts/nuts as well as the lubrication of the spindle. Failure to do so may cause premature failure.

Spindle Shafts

OREGON Product Code

85-055

Fits
Oregon® 82-012

Description
- Includes Oregon 45-259 & 45-257 bearings

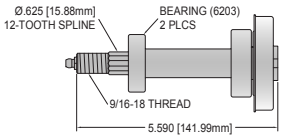

85-054

Fits
Oregon 82-029

Description
- Includes Oregon 45-259 & 45-257 bearings

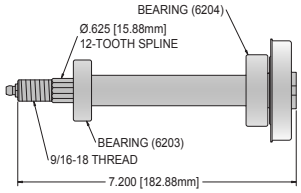

85-044

Fits
Oregon 82-405 Oregon 82-408

Description
- Includes (2) Oregon 45-259 bearings

85-045

Fits
Oregon 82-402

Description
- Includes (2) Oregon 45-205 bearings & (2) Oregon 45-206 races

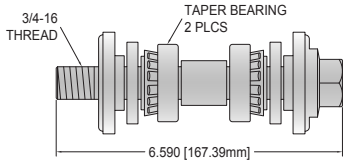

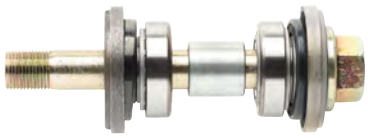

85-047

Fits
Oregon 82-407

Description
- Includes (2) Oregon 45-259 bearings

85-048

Fits
Oregon 82-513-2

Description
- Includes (2) Oregon 45-259 bearings

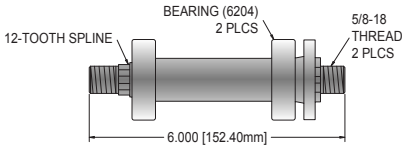

85-049

Fits
Oregon 82-515

Description
- Includes (2) Oregon 45-259 bearings

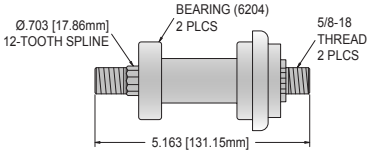

S

IMPORTANT: When installing spindles, follow all installation and maintenance instructions provided in the mowers owner/maintenance manual—including the correct torquing of the blade and pulley bolts/nuts as well as the lubrication of the spindle. Failure to do so may cause premature failure.

OREGON Product Code

85-050

Fits
Oregon® 82-519

Description
- Includes (2) Oregon 45-259 bearings

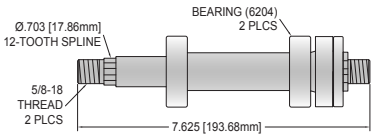

85-051

Fits
Oregon 82-516

Description
- Includes (2) Oregon 45-259 bearings

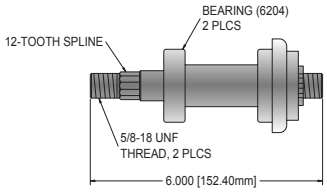

85-052

Fits
Oregon 82-517

Description
- Includes (2) Oregon 45-259 bearings

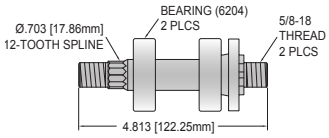

85-053

Fits
Oregon 82-511

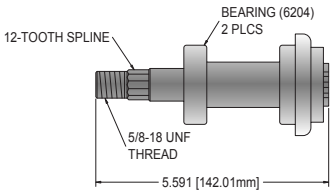

85-017

Replaces
AYP 137646 AYP 137645

Description
- Star blade mount
- Spindle shaft
- For 36", 38" & 42" ventilated decks
- OD: 3/4", Shaft length: 7"
- Fits Oregon 82-225, 82-220, 82-024 & 82-014
- Includes Oregon 45-259 & 45-257 bearings
- Use with Oregon 44-371 or 44-370 pulleys

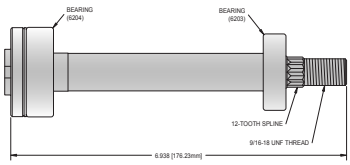

85-023

Replaces
AYP 137553

Description
- Fits Oregon 82-221 spindle shaft
- Accommodates star center hole blades
- OD: 3/4", Length: 4-7/8"
- Spindle shaft for 44" & 50" ventilated decks
- Includes Oregon 45-259 & 45-257 bearings
- Use with Oregon 44-371 or 44-370 pulleys

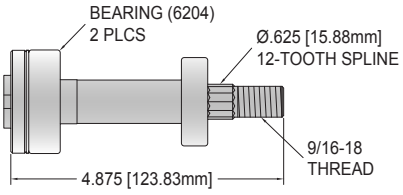

S

IMPORTANT: When installing spindles, follow all installation and maintenance instructions provided in the mowers owner/maintenance manual—including the correct torquing of the blade and pulley bolts/nuts as well as the lubrication of the spindle. Failure to do so may cause premature failure.

Spindle Shafts

OREGON Product Code

85-035

Replaces
AYP 187291 Husqvarna 532187291

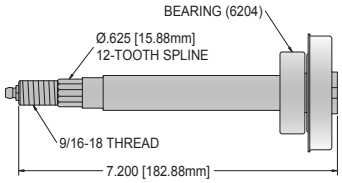

Description
- Fits Oregon® 82-026
- Use with Oregon 44-371 or 44-370 pulleys

85-036

Replaces
AYP 192872 Husqvarna 532192872

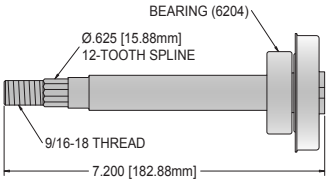

Description
- Use with Oregon 44-371 or 44-370 pulleys

85-034

Replaces
AYP 165482

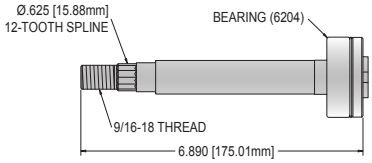

Description
- Use with Oregon 44-371 or 44-370 pulleys
- Six-point star

82-305

Replaces
Scag 43001-02 Wright Stander
Jacobsen 182246 Encore 363058 Ferris 1541480

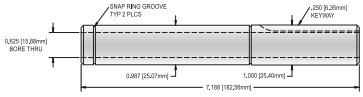

Description
- Fits Oregon 82-309 (OBS) & 82-300 spindle shafts
- Length: 7-3/16", OD: .987, ID: 5/8"; pulley OD: 1"

85-001

Replaces
Murray 20616

Description
- For 39" & 42" mowers
- Length: 5-1/4", O.D.: 5/8"
- UNF: 1/2-20 , 2 - 5/32" keyways
- For LT tractors, 42" deck

85-028

Replaces
Murray 774091 Murray 94129

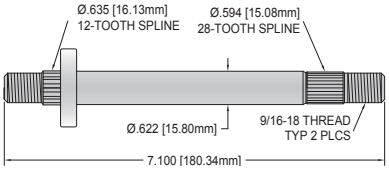

Description
- Spindle shaft
- 7.03" L, splined both ends, fits 38", 40", 42", 46", 48" & 50" LT rail frame, 46" GT rail frame & old style 52" GT & 30" export lawn tractor, also fits Scotts 42" LT & 52" GR rail frame

S

IMPORTANT: When installing spindles, follow all installation and maintenance instructions provided in the mowers owner/maintenance manual—including the correct torquing of the blade and pulley bolts/nuts as well as the lubrication of the spindle. Failure to do so may cause premature failure.

OREGON Product Code

85-029

Replaces
Murray 92849

Description
- Spindle shaft
- Splined both ends, 7.92" L

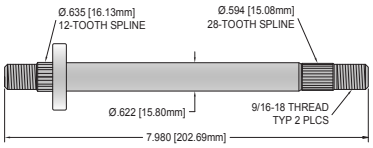

85-012

Replaces
Murray 91921

Description
- For 46" & 30" cut
- Length: 6.480", OD: .5/8"
- Use Oregon® 65-208 splined blade adapter & 44-342 pulley
- 46" deck - 3 blade system - old style deck & 30" rear engine rider uses Oregon pulley 44-340

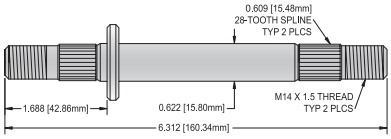

85-008

Replaces
Murray 91922

Description
- For 38", 40" & 42" decks with splined shaft
- Use with Oregon 65-208 blade adapter
- Length: 7.89", OD: 5/8"
- Use splined pulley & blade adapter

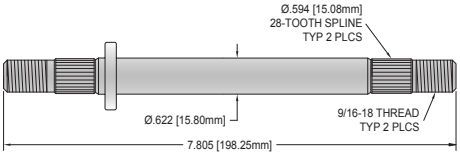

85-011

Replaces
Snapper 4-4785

Description
- Fits all single blade riders
- Length: 10-5/32"
- Use with Oregon® 45-295 bearing

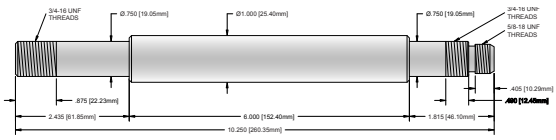

S

IMPORTANT: When installing spindles, follow all installation and maintenance instructions provided in the mowers owner/maintenance manual—including the correct torquing of the blade and pulley bolts/nuts as well as the lubrication of the spindle. Failure to do so may cause premature failure.

Spindle Shafts

OREGON Product Code

Replacement Parts

OREGON	Replaces	Description	Product Code	
09-260	AYP 187690	**Spindle Washer** ID: 43/64", OD: 1-1/8", thickness: 5/32"		
82-244	Murray 91903	**Spacer**		
04-001	AYP 129729 AYP 139729 AYP 137266	**Pulley Nut** Fits Oregon 82-225 spindle & 85-017 shaft on 36", 38" & 42" ventilated decks		
04-015	MTD 912-0417A	**Pulley Nut** Fits most MTD spindles		
02-301	AYP 17490612	**Self-Tapping Bolt** For mounting Oregon spindles 82,493, 82-495, 82-677, 82-678, 82-679, 82-680, & 82-514 to mower deck 3/8-16 x 1"		
02-304	AYP 173984	**Self-Tapping Bolt** For mounting Oregon 82-225 spindle to mower deck 5/16-18 x 1-1/4"		
49-314	Scag 481024	**Upper Grease Seal** Use with Oregon 82-325 OD: 2", ID: 1.625"		
49-333	Scag 481025	**Lower Grease Seal** Use with Oregon 82-325 OD: 2", ID: 1.625"		

S

IMPORTANT: When installing spindles, follow all installation and maintenance instructions provided in the mowers owner/maintenance manual—including the correct torquing of the blade and pulley bolts/nuts as well as the lubrication of the spindle. Failure to do so may cause premature failure.

OREGON	Description	Product Code

Backpack Sprayers

518769 **Backpack Sprayer, 4-Gallon (16 liter)**
Non-pressurized tank
Includes lance and spray nozzle (choice of flat fan or adj. cone)
Flexible hose is over 6 feet long
Shoulder strap and spare seal kit included
Lance holder
Easy to store

518771 **Backpack Sprayer, 5-Gallon (20 liter)**
Non-pressurized tank
Includes lance and spray nozzle (choice of flat fan or adj. cone)
Flexible hose is over 6 feet long
Shoulder strap and spare seal kit included
Lance holder
Easy to store

Replacement Parts

572030 **Wand, Metal**
Use with Oregon® 518769 & 518771 backpack sprayers

605533 **Plastic Wand Kit with Nozzle, Backpack Sprayer** - NEW
Use with Oregon 518769 & 518771 backpack sprayers

572037 **Hose, Backpack Sprayer**
Use with Oregon 518769 & 518771 backpack sprayers

572018 **Lid, Air Chamber Pressure**
Use with Oregon 518769 & 518771 backpack sprayers

572017 **Lid, Tank w/ Diaphragm**
Use with Oregon 518769 & 518771 backpack sprayers

572031 **Washer, Sealing, for Tank Lid**
Use with Oregon 518769 & 518771 backpack sprayers

572049 **Washer, Felt, Air Chamber Pressure Lid**
Use with Oregon 518769 & 518771 backpack sprayers

S

Sprayers

OREGON	Description	Product Code

Replacement Parts

572015 **Pump, Repair Kit**
Use with Oregon® 518769 or 518771 backpack sprayers
Includes 2 piston cups, 1 check ball

605531 **Carrying Strap, Backpack Sprayer** - NEW
Use with Oregon 518769 & 518771 backpack sprayers

605532 **Filter Screen, Backpack Sprayers** - NEW
Use with Oregon 518769 & 518771 backpack sprayers

605534 **Rubber Seals Kit, Backpack Sprayers** - NEW
Use with Oregon 518769 & 518771 backpack sprayers

605535 **Seal Valve, Backpack Sprayer** - NEW
Use with Oregon 518769 & 518771 backpack sprayers

S

Can't find what you're looking for?

Try us online to search the latest products available.

OregonProducts.com

OREGON	Replaces	Description	Product Code

AYP / Husqvarna

05-021	532179748 179748	**Extension Spring** For deck brake on lawn tractors with 42" cut (2002)	

05-020	532106734 532123713X 106734 123713X	**Torsion Spring** For deflector chute on many lawn tractors (1990–2008)	

05-022	169022	**Return Spring** For deck idler on many lawn tractors (1990 & newer)	

Briggs & Stratton

49-083	260584 692207	**Governor Rod Spring** For 8 thru 11 HP engines	

E-Z Rake

43-025	91010	**Dethatcher Spring**	

43-035	Honda 28442-ZH8-003 John Deere M128283	**Starter Spring** - NEW Fits Honda GX100, GX120, GX160, GX200, GXV160, and 28442-ZH8-003 John Deere 180A, 180B, 180C, 220A, 220B, 220C, 260B, and 260C greensmowers	

05-027	Husqvarna 577 88 47-01	**String Trimmer Spring** - NEW Fits BCZ 260TS	

MTD

05-001	732-0594A 932-0594A	**Extension Spring** Deck belt tension spring on 46" deck Length: 7-1/2", OD: 15/16"	

84-010	732-0307 932-0307A	**Deck Lift** Fits Helper series 600 Length: 11-1/4", OD: 3/4" Coil length: 6-1/4" Oil tempered wire diameter: 1/8"	

Springs

OREGON	Replaces	Description	Product Code

MTD

05-070	732-0429A	**Speed Selector Lever** Spring for variable speed model	
05-023	732-04280B 732-04280B	**Extension Spring** For deck idler on many lawn tractors with 38" & 42" decks (2006 & newer) Length: 6-3/8", OD: 3/4"	

Murray

48-001	165X58 165X2 20682	**Blade Drive Spring** Length: 4-1/2", OD: 11/16"	

Snapper

05-060	1-3694 1-7326 1-2123	**Drive Spring** Tension spring for wheel drive on self-propelled steel deck mowers	
05-061	1-2122	**Clutch Spring** Self-propelled mowers Adjustable Length: 6", OD: 1/2"	

Torsion & Extension Spring Assortment

OREGON	Qty.	OD x Length x Wire Dia	Product Code
08-201	112	Torsion & Extension Springs Standard refill qty. 10	

Components

	10	1/4 x 7/16 x .020
	10	1/4 x 7/8 x .018
	10	7/32 x 1-1/2 x .018
	12	11/32 x 1-7/8 x .031
	12	5/16 x 1-3/4 x .030
	12	9/32 x 2-3/16 x .022
	8	23/64 x 1-3/8 x .031
	8	13/64 x 1-3/4 x .021
	10	9/32 x 1-1/2 x. 021
	10	9/32 x 3/4 x .025
	10	11/32 x 1-3/8 x .021

OREGON	Replaces	Description	Product Code

Briggs & Stratton

33-719

396306
391178

Electric Starter Motor
Fits 243400 & 326400 series engines
Housing length: 4-3/8" (between caps)

33-700

693054
497595
494325
394805

Electric Starter Motor
Standard version - comparable to OEM
Fits model series, 170400, 171400, 176400, 19E400, 19F400, 19G400, 19K400, 190400, 192400, 194400, 194700, 195400, 195700, 196400, 196700, 197400, 197700, 198700, 221400, 222416, 226400, 250400, 252400, 252700, 253700, 254400, 254700, 255700, 256400, 256700, 257400, 282700, 28A700, 28B700, 28C700, 28D700, 28M700, 28N700, 28P700, 28Q700, 28R700, 28S700, 28T700, 28U700, 28V700, 28W700, 283700, 284700, 286700, 287700, 288700, 289700, 312700, 40H700, 40R500, 40R600, 401500, 404500, 405500, 406500, 406600, 406700, 407500, 407600, 407700, 44L700, 44M700, 44P700, 44Q700, 44R800, 44S700, 44S800, 441500, 441600, 441700, 445500, 445600, 445700, & 445800

33-770

Magnum Heavy-Duty Electric Starter Motor
Heavy-duty version of Oregon® 33-700
15% more torque & 15% faster than the OEM, Quicker starts,
Exceeds OEM standards, Heavier gel coat on the laminations,
20% more magnet area, Large brush surface contact area
Use with Oregon 33-761 replacement brush kit

33-708

795121
691262
499521
497401
494990
494198
490420
399169
394943

Electric Starter Motor
Fits model series, 222400, 225700, 250400, 252400, 253700, 254400, 255400, 256400, 28B700, 28D700, 28M700, 28N700, 28P700, 28Q700, 28R700, 28S700, 28T700, 280700, 281700, 283700, 283700, 284700, 284700, 286700, 287700, 287700, 289700, 289700, 290400, 290700, 294400, 294700, 303400, 303700, 305400, 350700, 351400, 351700, 354400, 380700, 381400, 40G700, 40H700, 401500, 405500, 405700, 406500, 406700, 407700, 44H700, 44K700, 44L700, 44M700, 44N700, 44P700, 44Q700, 441500, 441600, 441700, 445500, 445600, 445700, 445800, 446600, 446700, 446800, 446900, 49G500, 49M700, & 49M800
Housing length: 4-3/8"
Use with Oregon 33-761 replacement brush kit
Standard version - comparable to OEM

33-778

Magnum Heavy-Duty Electric Starter Motor
Heavy-duty version of Oregon 33-708
15% more torque & 15% faster than the OEM, Quicker starts,
Exceeds OEM standards, Heavier gel coat on the laminations,
20% more magnet area, Large brush surface contact area
Use with Oregon 33-761 replacement brush kit

S

Starters

OREGON	Replaces	Description	Product Code

Briggs & Stratton

33-771
497596
497287
394808

Magnum Heavy-Duty Electric Starter Motor
Heavy-duty version of Oregon® 33-701
15% more torque & 15% faster than the OEM, Quicker starts, Exceeds OEM standards, Heavier gel coat on the laminations, 20% more magnet area, Large brush surface contact area
Use Oregon® 33-761 replacement brush kit

33-709
498148
495100
399928

Electric Starter Motor
Fits model series, 40A700, 400400, 400700, 401700, 402400, 402700, 404400, 404700, 42A700, 42B700, 42D700, 42E700, 421700, 422400, 422400, 422700, 460700, 461700, & 462700
Housing length: 4-3/8"
Use with Oregon 33-761 replacement brush kit
Standard version - comparable to OEM

33-779

Magnum Heavy-Duty Electric Starter Motor
Heavy-duty version of Oregon 33-709, 15% more torque & 15% faster than the OEM, Quicker starts, Meets or exceeds OEM standards, Heavier gel coat on the laminations, 20% more magnet area, Large brush surface contact area
Use with Oregon 33-761 replacement brush kit

33-740
846451
808106
693469
691564

Electric Starter Motor
Steel pinion gear for steel ring gears
Fits model series, 290400, 294400, 294700, 295400, 296400, 297300, 297400, 303400, 303700, 304400, 305400, 305700, 350400, 350700, 351400, 351700, 354400, 356400, 356700, 358700, 359400, 359700, 380400, 381400, 384400, 385400, 385700, 386400, 386700, & 389400

NOTE: Not for use on engines with aluminum flywheel ring gear

---

33-772
693551

Starter Motor
Steel pinion gear for steel ring gears
Fits model series, 21A800, 21A900, 21B700, 21B800, 21B900, 21D800, 21R500, 21R600, 21R700, 21R800, 212700, 212900, 214700, 215700, 215800, 215900, 216900, 217700, 217800, 217900, 218700, 219700, 219800, 219900, 28AH00, 28B700, 28BH00, 28CH00, 28D700, 28M700, 28N700, 28P700, 28Q700, 28R700, 28S700, 28T700, 28U700, 28V700, 28W700, 280H00, 280J00, 281H00, 282H00, 283H00, 284H00, 285H00, 286H00, 283700, 284700, 286700, 287700, 288700, 289700, 31A500, 31A600, 31A700, 31A700, 31B700, 31C700, 31D700, 31E500, 31E600, 31E700, 31E800, 31F700, 31G700, 31H700, 31HN700, 31K700, 31L700, 31M700, 31M900, 31N600, 31N800, 31P600, 31P700, 31P700, 31P900, 31Q500, 31Q600, 31Q700, 31R500, 31R600, 31R700, 31R800, 31R900, 31S700, 31S800, 31S900, 31X700, 310700, 311700, 312700, 313700, 33M600, 33M700, 33M900, 33R800, 33S700, 33S800, 331700, 331800, & 331900
Housing length: 3-5/8"

NOTE: Not for use on engines with aluminum flywheel ring gear

S

OREGON	Replaces	Description	Product Code

Honda

33-735	31210-ZE3-013 Code #: 2450740	**Electric Starter Motor** Fits models GX340QAE2, GX340ZNE2, GX340VXE2, & GX390 Solenoid not included	
33-741	31210-ZE1-023	**Starter Motor** 12 Volt Fits 5.5 HP GX160 series engines	
33-733	31200-ZJ4-831 31200-ZJ4-832	**Starter Motor** 12 Volt Fits 24 HP GXV670, GXV620, & GXV610 series engines	
33-734	31200-ZJ1-841 32100-ZJ1-842 32100-ZJ1-H01	**Starter Motor** 12 Volt Fits 24 HP GX610, GX620, & GX670 series engines	

Kawasaki

33-795	21163-0749 21163-0727	**Electric Starter Motor** Fits FR651V, FR691V, FR730V, FS481V, FS541V, & FS600V engines	
33-728	21163-2073 21163-2073A	**Electric Starter Motor** Fits models FC401V, FC400V, & FC420V	
33-729	21163-2101	**Electric Starter Motor** Fits models 5F501F, FD620D, & FC661D	
33-730	21163-7010 21163-7001 21163-7022	**Electric Starter Motor** Fits models FH451V, FH500V, FH531V, FH541V, FH580V, FH601D, FH601V, FH641D, FH641V, FH680D, FH680V, FH721D, & FH721V	

S

Starters

OREGON	Replaces	Description	Product Code	
Kawasaki				
33-744	21163-7003	**Electric Starter Motor** Fits FH451V & AS06		
33-794	21163-7023	**Electric Starter Motor** Fits FS730V, FX481V, FX541V, FX600V, FX651V, FX691V, & FX730V engines		
33-792	21163-7025	**Electric Starter Motor** Fits FX751V, FX801V, FX850V, FX921V, & FXT00V engines		
33-743	21163-7026	**Electric Starter Motor** For FH721V BS40, & AS40		
33-793	99999-7080 21163-7007 21163-7029 21163-7031	**Electric Starter** Fits FH381V, FH430V, FH480V, FH541V, FH580V, FH601V, FH641V, FH680D, FH680V, FH721D, FH721V, & FH770D engines		
Kohler				
33-714	24-098-01 24-098-01S 25-098-08 25 098 09 25 098 11-S	**Electric Starter Motor** Solenoid shift style Fits models CH12.5, 13, 14, 15, 18, 20, 22, & 25 9-tooth gear		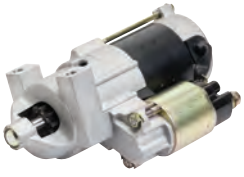
33-710	12-098-12 12-098-12S 12-098-19 12-098-19S 12-098-21S 12-098-14S	**Electric Starter Motor** Fits models CH11, 12.5, 13, 14, 15, & CV15 Use after serial no. 241200004		
33-722	12-098-10 25-098-04 25-098-04S 25-098-07	**Electric Starter Motor** Fits models CV12.5, 13, 15, & 16 For Command vertical engines		

S

OREGON	Replaces	Description	Product Code	
Kohler				
33-715	12-098-20 12-098-20S 12-098-13 12-098-13S 12-098-15S 12-098-22S	**Electric Starter Motor** Fits models CH14, CV11, 12.5, 13, 14, 15, & 16		
33-742	32-098-01 32 098 03-S 32 098 03 32 098 04	**Electric Starter** For models SV710, SV715, SV720, SV725, SV730, SV735, SV740, SV810, SV820, & SV830 **Does not fit every spec, check part number**		
33-702	41-098-04 41-098-06 41-098-06S	**Electric Starter Motor** Fits model M10, M14, & M16 series engines, For 10, 14, & 16 HP engines 10-tooth gear Use with Oregon® 33-751 replacement drive gear and Oregon 33-761 replacement brush kit		
33-704	45-098-09 45-098-09S 237534 45-098-05 A237510 45-098-07	**Electric Starter Motor** Fits model K321 & K341 series engines For 14 & 16 HP single cylinder engines 10-tooth gear Use with Oregon 33-751 replacement drive gear and Oregon 33-761 replacement brush kit		
33-774	45-098-09	**Magnum Heavy-Duty Electric Starter Motor** Heavy-duty version of Oregon 33-704 15% more torque & 15% faster cranking Quicker starts, Exceeds OEM standards Heavier gel coat on the laminations Larger brush surface contact area Bottom plate design allows for Use with Oregon 33-751 replacement drive gear and Oregon 33-761 replacement brush kit		
33-718	52-098-06 52-098-13 52-098-13S	**Electric Starter Motor** Fits models K17, 19, 21, M18, 20, & MV20		

S

Starters

OREGON	Replaces	Description	Product Code	
MTD				
33-707	52-098-12 52-098-03 52-098-09	**Electric Starter Motor** Fits model MV16 & M18 For 16 & 18 HP twin cylinder engines 9-tooth gear Use with Oregon® 33-754 replacement drive gear and Oregon 33-761 replacement brush kit		
33-777	52-098-12	**Magnum Heavy-Duty Electric Starter Motor** Heavy-duty version of Oregon 33-707 15% more torque & 15% faster cranking Quicker starts, exceeds OEM standards Heavier gel coat on the laminations Larger brush surface contact area Bottom plate design allows for fully interchangable brush kit 33-761 Replacement drive gear 33-754 Replacement brush kit 33-761		
33-745	951-11196 751-11196	**Electric Starter Motor 120V** Fits snow throwers using 478-SU, 483-SU, & 490-SU engines (2009–2010)		
33-746	951-10645A 751-10645A	**Electric Starter Motor 120V** Fits snow throwers using 265-JU, 270-JU, 165-SU, 370-SU, 365- SUA, 365-SUB, 370-SUA, 370-SUB, & 270-V engines (2007–2010)		
Onan				
33-720	191-0933 United Technologies: SM10795 SMH12B81 Case N9552	**Electric Starter Motor** For B43M & B48M model engines 10-tooth gear, counterclockwise rotation For point ignition units		
33-721	191-1567 United Technologies: 4367240 4379040	**Electric Starter Motor** Fits B43G & B48G model engines For point ignition units		
33-732	191-1642-04 191-1804-04 191-1808-04/06 191-1949-04/06/07/08	**Electric Starter Motor** Fits P-216, P-218, P-220, P-224, P-227 engines		

S

OREGON	Replaces	Description	Product Code

Tecumseh

33-716	33835	**Electric Starter Motor** Fits models HH80, HH100, HH120, HH150, OH,120, OH160, OH140, & OH160	
33-712	33605 35763 35763A 36343 36680	**Electric Starter Motor** Fits models HM70, HM80, HM100, HMSK90, HMSK100, OHM90, OHM110, OHM120, OHSK90, OHSK100, OHSK110, OHSK120, OHSK130, OHV12, OHV125, OHV13, TVM195, TVM220, TVXL220, OHH50, & TVXL120-170	
33-711	36795	**Electric Starter Motor** Fits models L, LEV, OHV135, OHV14, OHV145, OHV15, OHV150, OHV155, OHV16, OHV160, OHV165, OHV17, OHV170, & OHV175	
33-791	36795	**Magnum Heavy-Duty Electric Starter Motor** Heavy-duty version of Oregon® 33-711 15% more torque & 15% faster cranking Quicker starts Exceeds OEM standards Heavier gel coat on the laminations Larger brush surface contact area Use with Oregon 33-761 replacement brush kit	
33-713	37425 36914	**Electric Starter Motor** Fits models OH50, OHH50, OHV110, OHV120, OHV125, OHV130, & OHV135 **NOTE**: When used to replace four bolt mount starter, 2 new screws required (included)	
33-739	37425	**Magnum Heavy-Duty Electric Starter Motor** Heavy-duty version of Oregon 33-713 15% more torque & 15% faster cranking Quicker starts Exceeds OEM standards Heavier gel coat on the laminations Larger brush surface contact area Use with Oregon 33-761 replacement brush kit **NOTE**: When used to replace four bolt mount starter, 2 new screws required (included)	
33-738	33329E	**Electric Starter Motor 120V** Fits Snow King Engines TVM, TVXL, & HMSK, & OHSK engines **CSA Approved**	

S

Starters

OREGON	Replaces	Description	Product Code	
Briggs & Stratton				
31-068	497680	**Recoil Starter** Fits 12 CID vertical shaft L-head engines		
31-918	499706	**Recoil Starter** Fits 09XXXX & 10XXXX series engines		
31-065	693900	**Recoil Starter** Fits 192400, 196400, 197400, & 19G series engines		
31-061	493295 497598	**Recoil Starter** Fits Quantum and Europa engines Includes starter cup to use on engines with Susa starters OD: 5-9/16", height: 1-5/8" 4 mounting screws, 4-1/2" c-c		
31-062	497830 496650 495766	**Recoil Starter Assembly** For 5 HP model 13 series engines		
31-919	591301	**Recoil Starter** Fits 12XXXX & 15XXXX series engines		
Honda				
31-920	28400-Z0D-V04ZC 28400-Z0D-V03ZC 28400-Z0D-V02ZC	**Recoil Starter** Fits GX100 engines		
31-060	28400-ZE3-W01ZP 28400-ZE3-W01ZA 28400-ZE3-W02ZP	**Recoil Starter Assembly** Fits new style GX340, GX390, GX610, GX620, GXV610, & GXV620		
31-070	28400-ZG9-803 28400-ZG9-802 28400-ZE7-M02	**Recoil Starter Assembly** Fits GXV140 & GXV160		

S

OREGON	Replaces	Description	Product Code

Honda

31-066	28400-ZL8-023ZA 28400-KL8-013ZA 28400-Z0L-V20ZB	**Recoil Starter** For GVC135 & GCV160 model engines	
31-052	28400-ZH8-013ZA 28400-ZH8-013YA	**Recoil Starter Assembly** For GX120 & GX160 engines with new style with 2 plastic starter dogs Use with Oregon® 31-058 repair kit Use with Oregon 31-911 replacement rope handle	
31-075	28400-ZH8-023ZG 28400-ZH8-023ZB 28400-ZH8-023YA 28400-ZH8-003YA	**Recoil Starter Assembly** Fits GX120 & GX160 engines with new style with metal dogs	
31-049	28400-ZE2-W01ZA 28400-ZE2-W01ZB 28400-ZE2-W01ZN	**Recoil Starter Assembly** Fits GX240 & GX270 engines	
31-020	28400-ZE1-003ZF 28400-ZE1-003ZA	**Recoil Starter Assembly** Fits GX110 AND GX140 old style with metal dog Use with Oregon 31-912 replacement rope handle	

Kawasaki

31-071	49088-2166	**Recoil Starter Assembly** Fits models TD40 & TD48	

Komatsu

31-072		**Recoil Starter Assembly** Fits models G3K & G4K	

Mitsubishi

31-074		**Recoil Starter Assembly** Fits models TL33, TL43, & TL52	

S

Starters

OREGON	Replaces	Description	Product Code	
MTD				
31-119	951-10658 751-10658	**Recoil Starter** For snow throwers with 165-SU, 265-SU, 270-SU, 365-SU, & 370-SU engines (2008 & newer)		
31-120	951-10955 751-10955	**Recoil Starter** For snow throwers with 161-JW & 161-JWA engines (2008 & newer)		
31-121	951-11310 751-11310	**Recoil Starter** Fits snow throwers with 483-SU, 483-SUA, 490-SU, & 490-SUA, engines		
Robin				
31-054	227-50811-10 227-50211-00 227-50211-01 227-50405-00 282-50211-00	**Recoil Starter** Fits model EY20		
Tecumseh				
31-050	590621, 590635, 590642, 590646, 590648, 590666, 590666A, 590686, 590688, 590694, 590707, 590737, 590738, 590763, 590785	**Recoil Starter Complete** For many engines (1990 & newer)		
31-051	590420A 590458	**Recoil Starter Complete** For most engines (1989 & older) Fits all Snow King applications		

S

OREGON	Replaces	Description	Product Code

Tecumseh

31-047	590746 590736 590704 590671 590748A 590788	**Recoil Starter** Fits models HM100, HM80, HM90, LH318XA, LH358EA, OH195, OH318, TVM220, OHH50, OHH55, OHH60, & OHH65	
31-116	590789	**Recoil Starter** Fits models LH318SA, LH358SA, OH318SA, OH195SA, & OH358SA ❄ **Has winter pulley**	
31-117	590787 590784	**Recoil Starter** FIts model LH195SA ❄ **Has winter pulley**	

S

Starter Parts

OREGON	Replaces	Description	Product Code

Electric Starter Brushes

33-759-0 Briggs & Stratton 395538

Brush Set
For OEM style Briggs & Statton starters with
3-5/8" or 4-3/8" housing length

33-760-0 Briggs & Stratton 497608

Brush Set
Fits OEM style Briggs & Statton motors

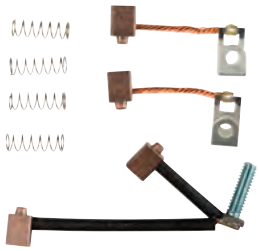

33-761

Replacement Brush Set
For Oregon® starters with aluminum end caps
Use with Oregon starter parts 33-700, 33-701, 33-708,
33-709, 33-719, 33-704, 33-705, 33-707, 33-710,
33-714, 33-740, 33-774, 33-777, 33-791, & 33-739

33-762-0 Briggs & Stratton 395537
John Deere AM107180

Starter End Cap
For OEM style Briggs & Stratton starters with
3-5/8" housing length

33-768-0 Tecumseh 37442
Tecumseh 36959
Tecumseh 35899

Starter End Cap
Fits models OHV110, OHV125, & OHV130
Includes brushes and bearings

Electric Starter Drives

33-007 Briggs & Stratton 398003
Briggs & Stratton 692024

Starter Drive
For all electric starter mowers with
gear retained by roll pin, 8 HP thru 18 HP
Use with Oregon 43-012 gear
Use with Oregon 33-003 starter assembly

33-003 Briggs & Stratton 495877
Briggs & Stratton 490467
Briggs & Stratton 393254

Starter Drive
Gear kit without clutch
Includes gear, retainer spring, & cover

S

OREGON	Replaces	Description	Product Code

Electric Starter Drives

33-005	Briggs & Stratton 696540 Briggs & Stratton 495878 Briggs & Stratton 490421 Briggs & Stratton 396865	**Starter Drive** Complete assembly with clutch Includes gear, retainer spring, & cover	
33-006	Briggs & Stratton 696541 Briggs & Stratton 497606	**Starter Drive Kit** New style for electric starter motors For single & twin cylinder aluminum block engines Use with Oregon® 33-700, 33-701, 33-708, 33-709, 33-770, 33-771, 33-778, & 33-779 starters	
33-029-1	Briggs & Stratton 496881	**Starter Drive Kit** Fits 23, 24, 25, & 35 CID OHV engines with **Steel flywheel ring gears only**	

Starter Gears

31-056	Briggs & Stratton 399676 Briggs & Stratton 392134 Briggs & Stratton 696537	**Flywheel Ring Gear** For model 17–28 series engines	
43-012	Briggs & Stratton 280104 Briggs & Stratton 280104S Briggs & Stratton 693508 Briggs & Stratton 693059 Briggs & Stratton 695708 John Deere M83184	**Starter Gear** For most electric starter motors with plastic gears on Briggs & Stratton engines 16 teeth – 1-5/8" OD **Not for use with steel gears**	
43-037	Briggs & Stratton	**Starter Gear - NEW** Fits Briggs & Stratton 210700 - 312799 Series & 20700 - 252799 Series 14-tooth gear	
33-751	Kohler 41-755-33 Kohler 41-755-33S	**Starter Drive Gear** Use with Oregon 33-702, & 33-704 10-tooth gear	
33-754	Kohler 48-755-02 Kohler 48-755-40	**Starter Drive Gear** Use with Oregon 33-707 9-tooth gear	

S

Starter Parts

OREGON	Replaces	Description	Product Code	

Starter Gears

33-526	Tecumseh 33844	**Starter Drive Gear** Use with Oregon 33-716 11-tooth gear		
33-527	Tecumseh 37050	**Starter Drive Gear** Use with Oregon® 33-712 16-tooth gear		

Starter Clutch

43-404	Briggs & Stratton 399671 Briggs & Stratton 394558 Briggs & Stratton 298310 Briggs & Stratton 298798 Briggs & Stratton 495970 Briggs & Stratton 293578	**Starter Clutch** For most Briggs & Stratton engines except 16 HP cast iron engines		

Starter Cups

31-037	Honda 28451-ZE3-A02	**Starter Cup** Fits Honda GX340 & GX390 engines		
31-013	Honda 28451-ZH7-801	**Starter Cup** For model GX120 with metal starter dogs Use with Oregon 31-075		
31-026	Honda 28451-ZH8-003	**Starter Cup** Fits Honda GX160 engines		

Starter Center Screws

31-028	Honda 90003-ZH8-003	**Starter Center Screw** Fits Honda GX160 engines		
31-032	Honda 90004-ZE2-W01	**Starter Center Screw** Fits Honda GX240 engines		

Starter Handles

31-909	Briggs & Stratton 490652 John Deere AM107180	**Two Piece Handle** For newer 8 HP and above engines		

S

OREGON	Replaces	Description	Product Code	

Starter Handles

31-908	Briggs & Stratton 491288 Briggs & Stratton 393152 John Deere M93586	**Rubber Handle** For most models w/vertical pull starters Includes handle insert 3, 3.5, & 4 HP		
31-900-0	Briggs & Stratton 66728 Briggs & Stratton 490652	**Rubber Handle with Pin** For use with #4 through #6 rope and older side-pull starters		
31-907	Briggs & Stratton 398101	**Mitten Grip Handle** For snow blowers and lawn mowers Toro, Ariens, & others		
31-911	Honda 28461-ZG0-004	**Starter Handle** Fits G100 & Oregon® 31-053		
31-912	Honda 28461-ZH8-003	**Starter Handle, Small** Fits GX110, GX120, GX140 GX160, & GX240, & Oregon 31-052		
31-109	Honda	**Starter Handle** Fits GCV135 & GCV1160 model engines, & Oregon 31-066		
31-004	Husqvarna 503-85-39-01	**Starter Handle** For many Husqvarna chainsaw models		
31-100	Echo 17722801110 John Deere PT2637	**Starter Handle** For trimmers and chainsaws		
31-910	Honda 28461-ZE1-003	**Starter Handle, Rubber** For larger horse power engines		
31-907	John Deere PT10615 Noma 315542 Tecumseh 590574 Briggs & Stratton 398101	**Mitten Grip Handle** Fits snow blowers and lawn mowers Toro, Ariens, & others		

S

Starter Parts

OREGON	Replaces	Description	Product Code

Starter Handles

31-913	Maruyama 261628	**Starter Handle** Fits MC2300, MC2600, & MC3210	
31-914	Stihl 1121-195-3400	**Starter Handle** Fits chainsaw models 024, 028, 031, 034, 038, 041, & 070, trimmers FS220 & FS280, & blowers BR320 & 3400	
31-907	Tecumseh 590574 Briggs & Stratton 398101	**Mitten Grip Handle** For snow blowers and lawn mowers Toro, Ariens, & others	
31-904	Tecumseh 590387 Toro 77-8510 John Deere AM30965	**Rubber Handle** For older side pull starter Includes handle insert	

Starter Pawls & Springs

31-057	Briggs & Stratton 281505 Briggs & Stratton 281505S	**Starter Pawl & Spring** For many recoil starters with nylon pawl	
31-091	Echo 177218-40630	**Starter Pawl & Spring** For many types of hand held equipment	
31-083	Honda 28422-ZE2-W01 • Code 3678877	**Starter Ratchet** Fits GX240, GX270, GX340, & GX390 series engines	
31-087	Honda 28443-ZE2-W01 Code 3678901	**Ratchet Return Spring** Fits GX240, GX270, GX340, & GX390 series engines	
31-025	Honda 28422-ZH8-013	**Starter Pawl** Fits Honda GX160 engines	
31-090	Honda 28486-ZE6-T02 Code 3979929	**Starter Ratchet** Fits GXV160 series engines	

S

OREGON	Replaces	Description	Product Code

Starter Pawls & Springs

43-035	Honda 28442-ZH8-003 John Deere M128283	**Starter Spring** - NEW Fits Honda GX100, GX120, GX160, GX200 & GXV160; John Deere 180A, 180B, 180C, 220A, 220B, 220C, 260B & 260C Greens mowers	
31-011	Stihl 1124-195-7200	**Starter Pawl** Fits models 038, 041, 042, 045, 048, 051, & 070	
31-092	Stihl 1125-195-7200	**Starter Pawl** Fits 009, 08, 09, 010, 011, 012, 017, 018, 019, 020, 023, 024, 025, 026, 028, 032, 034, 038, 044, 051, 060, FS35, & FS40	

Starter Pawl Retainers

31-064	Briggs & Stratton 692299 Briggs & Stratton 281503	**Starter Pawl Retainer** Fits 197400, 197422, 197417, 93412, 93452, & 98902 series engines	
31-027	Honda 28433-ZH8-003	**Starter Pawl Retainer** Fits Honda GX160 engines	

Starter Pawl Repair Kits

31-108	Honda	**Starter Pawl Repair Kit** Fits GCV135 & GCV160 model engines, & Oregon® 31-066	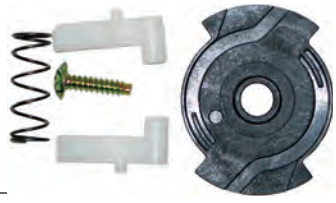
31-058	Includes: Honda 28422-ZH8-013 • (ratchet) Honda 28443-ZH8-003 • (spring) Honda 28441-ZH8-003 • (washer) Honda 28433-ZH8-003 • (guide ratchet)	**Starter Pawl Repair Kit** Fits models GX110, GX120, GX140, & GX160, & Oregon 31-052	
43-019	Kohler 12 757 06-S	**Recoil Starter Dog Kit** Fits CH11–CH640, CV11–CV493, K181, M8-M16, & TH16–TH18	

Starter Parts

OREGON	Replaces	Description	Product Code	

Starter Pulleys

31-063	Briggs & Stratton 498144 Briggs & Stratton 281504	**Starter Pulley & Spring** Fits Oregon® 31-065		
43-200	Briggs & Stratton 295871 John Deere AM35742	**Starter Pulley** For 5, 7, 8, 10, 11, & 12 HP engines Fits 130202, 130902, 170402, 170702, 190402, 190702, 220702, 252702, & 281702 series OD: 5-3/8" Use with Oregon spring 43-400		
43-014	Briggs & Stratton 493824 Briggs & Stratton 492832 Briggs & Stratton 492141 John Deere AM116270 Toro 77-8560	**Starter Pulley** For Quantum engines 5 HP OHV Vanguard Use with Oregon 43-403 replacement spring Spring NOT included OD: 5-7/16"		
43-100	Briggs & Stratton 280439 Briggs & Stratton 280439S Briggs & Stratton 280117 Briggs & Stratton 280469 John Deere PT11016	**Starter Pulley** For 2, 3, 3.5, & 4 HP engines with side pull starters Fits 80202, 92902, & 110902 series Use with Oregon 43-400 replacement spring OD: 4-1/8"		
31-041	Briggs & Stratton 499901	**Starter Pulley** For 10 & 9 CID engines Spring included		
31-093	Echo #177202-44330	**Starter Cup** Fits SRM2305		
31-094	Echo #177215-43130	**Starter Pulley** Fits SRM3605		
55-115	Echo #177215-44430	**Starter Pulley** Fits models SMR2400 & SMR2410 OD: 2-1/8"		

S

OREGON	Replaces	Description	Product Code	

Starter Pulleys

55-811	Homelite 97768A	**Starter Pulley** Fits XL, Super 2, 240, & 245 series 2 9/16" OD Use with Oregon® 43-528 (OBS) replacement spring		
55-813	Homelite 98770A	**Starter Pulley** Fits ST145, 155, & 175 Use with Oregon 43-532 replacement spring		
31-023	Honda 28420-ZH8-003	**Starter PulleySS** Fits Honda GX160 engines		
31-034	Honda 28420-ZE2-W01	**Starter Pulley** Fits Honda GX340 & GX390 engines		
31-103		**Starter Pulley & Recoil Spring** FIts Oregon 31-066		
55-168	Husqvarna 5037753-01	**Starter Pulley** Fits brush cutter models 225, 227, 232, 235, & 240		
31-002	Husqvarna 5031024-05	**Starter Pulley** Fits saw models 61, 268, & 272		

S

Starter Parts

OREGON	Replaces	Description	Product Code	

Starter Pulleys

31-014	Kawasaki 59101-2110 Kawasaki 59101-2103	**Starter Pulley** For 12.5 HP & 14 HP Fits models FB460V, FC401V, & FC420V		
55-158	Kawasaki 59101-2067	**Starter Pulley** Fits trimmer TD-40, Shindaiwa T25, C25, C35, & CP25, Stihl models FS60, FS61, & FS80, & trimmer FS90		
31-115	Kawasaki 59101-7001	**Starter Pulley** For 17 HP Fits model FH430V, FH451V, FH480V, FH500V, FH541V, & FH580V		
43-021	MTD 753-04232 MTD 791-181597	**Recoil Pulley** Fits MTD, Ryobi, Yard Man, Bolens, & Troy-Bilt 725R, 750R, 765R, 775R, & 790R		
43-034	MTD 951-11721 MTD 751-11721	**Recoil Pulley** - NEW Fits MTD Yard Man & Yard Machine		
31-105	Mitsubishi KS02037AA002	**Starter Pulley** Fits TL33, TL43, & TL53 models		
55-800	Ryan 683856	**Starter Pulley** Fits models 265-1, 365-SSR, 284-3, & 264-3, & Lawn Boy 1150, 1400CL, & 1480 OD: 2-7/8", Bore: 5/8" Use with Oregon® 43-415 (OBS) replacement spring		

S

OREGON	Replaces	Description	Product Code	

Starter Pulleys

55-820	Ryan 682030 Green Machine 167304 Snapper 4-2005	**Starter Pulley** Fits Lawn Boy 3100, 3130, 3160, 1300, 1360, SSI, SSII, 1400, 1460, & 1100, & Snapper models 310 & 311 OD: 2-7/8", Bore: 5/8" Use with Oregon 43-415 (OBS) replacement spring	
31-006	Stihl 1123-195-0400	**Starter Pulley** Fits models 017, 018, 023, & 025	
31-010	Stihl 1128-195-0400	**Starter Pulley** Fits model 036	
31-067	Tecumseh 590618	**Starter Pulley** Fits Oregon® 31-050	

Recoil Starter Gears

43-011	Briggs & Stratton 299948 Briggs & Stratton 395820 John Deere AM35020	**Starter Gear** For 3, 3.5, & 4 HP engines w/vertical pull starters Fits 92508, 92908, 110908, & 111908 Use with Oregon 43-402 spring (OBS)	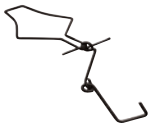

Can't find what you're looking for?
Try us online to search the latest products available.

OregonProducts.com

Starter Parts

Starter Springs

OREGON	Replaces	Description	Product Code
Briggs & Stratton			
43-403	262594, 491889	For 12 CID engines	
43-400-0	490179, 294303	For most 2–16 HP engines	
Echo			
43-509	17722042030	Fits GT1100, GT2102, GT2103, SRM1501, SRM2301, & SRM2310	
Green Machine			
43-685	300285	Fits 2000, 2500, 3000 (...201446). Also fits TMC	
Hoffco			
43-532	214802S	Fits HB25	
Homelite			
43-532	A98773	Fits ST145, ST155, ST175, ST185, ST275, ST285, ST385, & ST485	
Honda			
43-425	28442-ZH8-003	Fits GX100, GX120, GX160, GX200, GXR120, GXV160, & Oregon® 31-052	
43-426	28442-ZE2-W01	Fits GX340 & GX390, Oregon 31-060	
31-081	28415-ZG9-802	Fits GXV160	
Husqvarna			
43-540	50 15 204 01	Fits 61 Rancher, 162, 181, & 266	
43-562	50 17 631 01	Fits 136, 141, 240, 245, 334, 335, 336, 338, 339, 36, 40, 41, 45, 50, 51, & 55	
Jonsered			
43-540	501 52 04 01	Fits 630, 630 Super, & 670	
Kawasaki			
43-417	92145-2090	Fits FB460V & FC420V	
31-114	92-145-7008	Fits FH430V, FH451V, FH480V, FH500V, FH541V, & FH580V	
Kohler			
43-018	12 089 06-S	Fits CH11- CH640, CV11- CV493, K181, M8-M16, & TH16-TH18	
Red Max			
43-685	113075220	Fits BC220, 26, CHT230, & HT230	
Robin			
43-685	A6000-260-0000	For 22.5 cc engine	
Sachs/Dolmar			
43-685	A6000 260 0000	Fits Robin NB23F (22.5cc), SACHS 225 & NB 02-2A	
Shindaiwa			
43-685	20000-75140	Fits T25, C25, C35, & TC25	
Stihl			
43-694	1118-190-0600	Fits 024, 026, 028, 032, 034, & 08S	
43-699	1117-190-0601	Fits 038, 041, (#5816401...), 045 (5919431...), 048, 050, 051 (#674961...), 056, & 075	
43-685	4112-195-1600	Fits FS60, 61E, 65AVE, 80, 80E, & 90AVE	

Premium Starter Rope - Application Guide

No.	Size	MM	Application
#3	3/32	—	2-cycle handheld
#3-1/2	7/64	2.8	For chainsaws & trimmers
#4	1/8	3	Lawn Boy & Briggs & Stratton
#4-1/2	9/64	3.5	Briggs & Stratton
#5	5/32	4	Tecumseh & Clinton
#5-1/2	11/64	4.5	Clinton & others
#6	3/16	5	Briggs & Stratton
#8	1/4	6	Wisconsin, Kohler, & large H.P.

Premium Braid Nylon

OREGON	No.	Length	Product Code
31-140	#4	100 ft.	
31-142	#4-1/2	100 ft.	
31-150	#5	100 ft.	
31-152	#5-1/2	100 ft.	
31-160	#6	100 ft.	
31-180	#8	100 ft.	
31-230	#3	200 ft.	
31-232	#3-1/2	200 ft.	
31-240	#4	200 ft.	
31-242	#4-1/2	200 ft.	
31-250	#5	200 ft.	
31-252	#5-1/2	200 ft.	
31-260	#6	200 ft.	
31-540	#4	1,000 ft.	
31-542	#4-1/2	1,000 ft.	
31-550	#5	1,000 ft.	
31-552	#5-1/2	1,000 ft.	

Standard Diamond Braid

OREGON	No.	Length	Product Code
31-642	#4-1/2	100 ft.	
31-650	#5	100 ft.	
31-732	#3-1/2	250 ft.	
31-740	#4	250 ft.	
31-742	#4-1/2	250 ft.	
31-750	#5	250 ft.	
31-752	#5-1/2	250 ft.	
31-760	#6	250 ft.	

Starter Rope with Handle

OREGON	Size	Length	Handle	Product Code
31-604	#4-1/2	42"	Rubber	
31-635	#4-1/2	88"	Rubber	

Steering Parts

OREGON	Replaces	Description	Product Code

Axles

76-019
Replaces: MTD 17584, MTD 97584

Right-Hand Front Axle
Fits many 400 & 600 series tractors
Use with Oregon® 76-018 front pivot bar assembly

76-021
Replaces: MTD 97585A, MTD 17585

Left-Hand Front Axle
Fits many 400 & 600 series tractors
Use with Oregon 76-018 front pivot bar assembly

76-018
Replaces: MTD 14608-0637, MTD 753-0642-0637

Front Pivot Bar Assembly
Fits most 600 series tractors
Use with Oregon 76-019 front axle, right-hand,
Oregon 76-021 front axle, left-hand, &
Oregon 45-100 bushing

Ball Joints

45-103
Replaces: John Deere AM38782

Ball Joint
Right-hand thread
Rubber grommet seal
Size: 5/16-24 male and female threads
Length: 1-7/16"
Thread length: 11/16"

45-114
Replaces: John Deere AM100644, John Deere AM32868, MTD 723-0179, Ingersoll C12102

Ball Joint
Right-hand thread
Rubber grommet seal
RH female: 1/2-20
RH male: 1/2-20
Length: 1-3/8", thread length: 1-1/8"
MTD (1985 & newer)

45-117
Replaces: John Deere AM100645, John Deere AM32869

Ball Joint
Left-hand thread
Rubber grommet seal
LH female: 1/2-20
RH male: 1/2-20
Length: 1-3/8", thread length: 1-1/8"

45-124
Replaces: Cub Cadet 923-0448A, MTD 723-0448, MTD 723-0448A, MTD723-0448AP, MTD 923-0448A, MTD OEM-723-0448, Toro 112-0917

Ball Joint
Right-hand thread
Rubber grommet seal
RH female: 7/16" -20
RH male: 3/8" -24

S

OREGON	Replaces	Description	Product Code

Ball Joints

45-104
MTD 723-0156
Murray 21031
Snapper 1-0745
Scag 48118
Bobcat 108078
Exmark 373077

Ball Joint
Right-hand thread
Rubber grommet seal
Size: 3/8-24 male and female threads
Length: 1-11/16"
Thread length: 7/8"
MTD (1985 & newer)

45-111
MTD 723-3018

Ball Joint
Fits tractor series (1996 & newer) 200, 400, 500, 600, 700, 800, & 900
Rubber grommet seal
Size: 3/8-24 male and female threads, thread length: 5/8"

45-132
MTD 723-0448A

Ball Joint
For new style drag links (1997 & newer)
Rubber grommet seal
Use on Oregon® 45-133 (OBS) & 45-119
Size: 7/16-20 female, 3/8-24 male

45-109
Roper 8514R

Ball Joint
For riders
RH male: 3/8-24
LH female: 1/2-20

Drag Links

45-142
AYP/Husqvarna
532069832
169832

Drag Link
For many lawn tractors (2001 & older)

45-143
AYP/Husqvarna
532175121
175121

Drag Link
For many lawn tractors (2001 & newer)

45-116
Murray 91749

Drag link
For tractors (1989 & newer)
Length: 17-1/8"

Steering Arms

76-100
MTD 683-0055
MTD 983-0055

Steering Arm for Lawn Tractors
Fits 400, 600, & 800 series lawn tractors
(1990 & newer)

Steering Wheel Supports/Adapters — AYP & Husqvarna

76-042
532160395
160395

Steering Shaft Support
For many lawn tractors (2001 & older)

S

Steering Parts

OREGON	Replaces	Description	Product Code

Steering Wheel Supports / Adapters — AYP & Husqvarna

76-043	532437747 532186737 532110711 532100711 437747 186737 110711 100711	**Steering Wheel Adapter** For many lawn tractors (1990 & newer)	

Steering Shafts

76-041	AYP 156546	**Steering Shaft** For many lawn tractors (1996–2001)	
76-056	Cub Cadet 738-04262	**Steering Shaft** - NEW For many lawn tractors OD: 5/8" Length: 25"	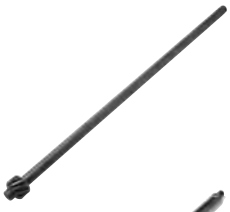
76-053	Husqvarna 532 15 65-43	**Steering Shaft** - NEW For many lawn tractors	
76-052	Husqvarna 532 15 65-46	**Steering Shaft** - NEW For many lawn tractors	
76-055	MTD 938-05078	**Steering Shaft** - NEW For many lawn tractors	
76-044	MTD 738-0919A MTD 738-0919 MTD 938-0919 MTD 753-04517 MTD 738-0887	**Steering Shaft** For many lawn tractors (1995–1996) & (2003–2013)	

S

OREGON	Replaces	Description	Product Code

Steering Sector / Steering Gears

76-051
MTD 717-1550
MTD 717-1550A
MTD 717-1550B
MTD 717-1550C
MTD 717-1550D
MTD 717-1550E
MTD 917-1550E

Steering Gear - NEW
For many lawn tractors
20 tooth

76-057
MTD 617-04094

Steering Gear Assembly - NEW
For many lawn tractors
24 tooth

76-040
AYP / Husqvarna
532136874
136874

Steering Gear Sector
For many lawn tractors (2001 & older)
22 tooth

76-025
Murray 402075

Steering Gear Replacement Kit
For many lawn tractors (1996 & newer)

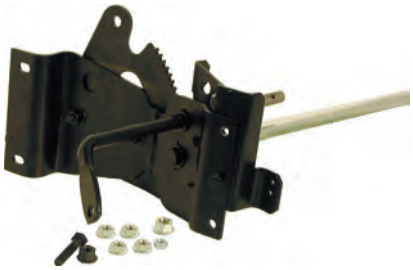

51-014
MTD 717-1554

Pinion Gear
For many lawn tractors (1999 & newer)
11 tooth

76-050
MTD 717-04943

Pinion Gear - NEW
For many lawn tractors
11 tooth

45-144
AYP 532155106

Bushing
For steering on many lawn tractors

S

Switches

OREGON	Replaces	Description	Product Code

Ignition Switches

33-385 Universal

Ignition Switch
Five screw terminals, 4-position
Requires 3/4" mounting hole
For magneto equipped engines
with electric starter

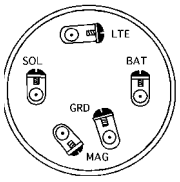

33-375 Ariens 15883

Ignition Switch
Plastic snap in bezel
7 terminals, 4-position

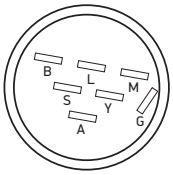

33-386

AMF 44745/300295
John Deere AM102551
MTD 725-0267A
MTD 925-0267A
Murray 21064PA
Roper 3621R
Scag 48017
Noma 421064
Dixon 4197
Bobcat 48032B
Honda 3510-772-003

Ignition Switch
5 spade terminal for magneto ignition
3 position
Requires 5/8" mounting hole

Toro 23-0660
MTD 725-0267
AYP 3612R
AYP 4406R
AYP 365402

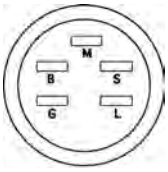

33-397

AYP 158913
Exmark 543070
Exmark 1-543070
Simplicity 1686637
Snapper 26343
Snapper 7026343

Ignition Switch
5-spade terminal
For magneto ignition

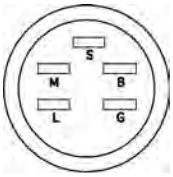

33-376

AYP 175566
MTD 925-1741

Ignition Switch
Plastic snap mount
7 terminals, 4-position
Use with Oregon® 33-094 or 33-099 key and
33-096 connector

Not for reverse overide applications

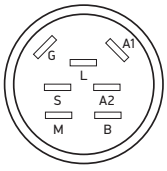

33-152 MTD 925-3163

Ignition Switch
6 terminal, 3 position
Requires 5/8" mounting hole

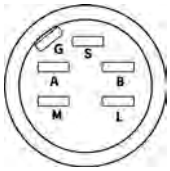

S

OREGON	Replaces	Description	Product Code

Ignition Switches

33-106
Cub Cadet 925-04019
MTD 925-04019
MTD 725-04019

Ignition Switch
5 terminal, 3 position

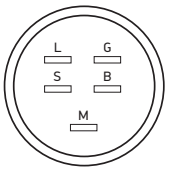

33-105

Ignition Switch
7 terminal, 4-position
Ignition switch only for 925-04227B &
925-06119 ignition module unit

Module not included
(shown for illustration only)

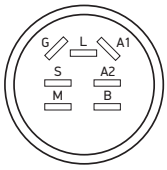

33-395
Gravely 18272
Noma 300687

Ignition Switch
Requires 5/8" mounting hole
3 position
For magneto ignition

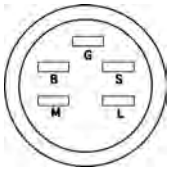

33-377
John Deere AM101561

Ignition Switch
3 position
6 terminals

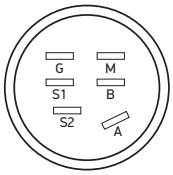

33-388
John Deere AM102544
John Deere AM31995

Ignition Switch
Fits 110, 112, & 140 tractors with magneto ignition
3 position, 9/16" mounting hole

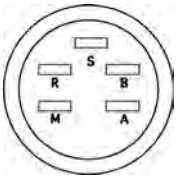

33-393
John Deere AM103286
John Deere AM32686

Ignition Switch
Fits later 110-120, 140, 200, & 300 series

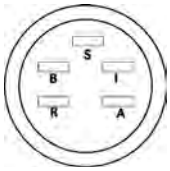

S

Switches

OREGON	Replaces	Description	Product Code	

Ignition Switches

33-074	John Deere AM133596 MTD 925-04228 MTD 725-04228 Dixie Chopper 500017	**Ignition Switch** 5 terminal, 3 position		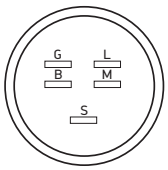
33-398	John Deere AM38227	**Ignition Switch** 6 spade terminal 3 position		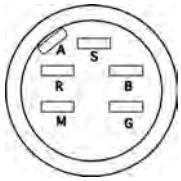
33-394	Kohler 25-099-04-S Kohler 25 099 04-S Kohler 25 099 032 Kohler 25 099 02	**Ignition Switch** Magnum Engines Magneto units		
33-392	Murray 92377 Murray 092377MA Murray MU092377 Murray MU092377MA	**Ignition Switch** For front engine riding mowers		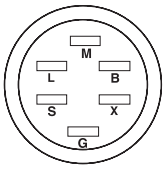
33-383	AYP 140301 MTD 725-1717 Murray 92556 Murray 092556 Murray 092556MA	**Ignition Switch** 7 post switch For engines equipped with fuel shut-off solenoid (1994 & newer)		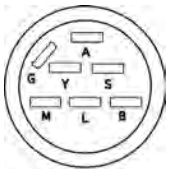
33-396	Murray 91846 Noma 300687 Murray 091846MA	**Ignition Switch** 4-position switch 5/8" mounting hole		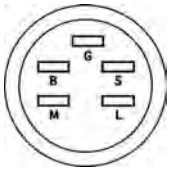
33-399	Scag 48798 Briggs & Stratton 692318 MTD 925-1396	**Ignition Switch** For 14 & 18 HP twin cylinder engines		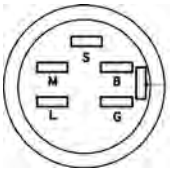

S

OREGON	Replaces	Description	Product Code

Ignition Switches

33-391
Snapper 1-8816
Snapper 7018816

Ignition Switch
Fits Series 6, 7, 8, 9, 10, & 11 (1988 & newer)
Use on electric start riders without
push button start

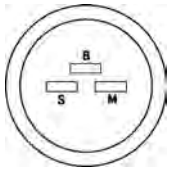

33-024
Cub Cadet 725-3232
Exmark 403121
Ferris 1521842
General Power 630186
Great Dane D18090
Homelite JA13064-1
Lawnboy 700171
Lawnboy 740015
Murray 056419
Murray 056419MA
Murray 56419
Noma 49907

Ignition Switch
2-position, 2 terminals
On/off switch

Noma 56992
Scag 48609
Simplicity 1669804
Snapper 1-7817
Snapper 7017817
Troy Bilt 1758145

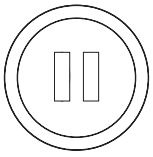

33-387
Snapper 1-1155
Snapper 7011155

Ignition Switch
3 screw terminal
3 position
Requires 5/8" mounting hole

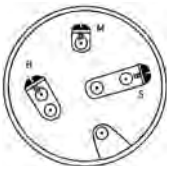

33-379
Snapper 72684
Snapper 7073684

Ignition Switch
Plastic snap in bezel
3 position
5 terminals

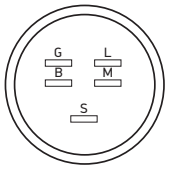

33-389
Wheel Horse 103990
Kohler 48-099-01
Onan 378-0385

Ignition Switch
For battery coil ignition
5 spade terminal
3 position
Requires 5/8" mounting hole

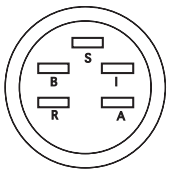

Ignition Keys

42-008
John Deere M40718
Murray 20729
Scag 4817-02
Sears 365410

Ignition Key
For 95% of rotary mowers

42-009

Display Card - 20 of 42-008

S

Switches

OREGON	Replaces	Description	Product Code

Ignition Keys

33-099	Universal AYP 140401/140403 Husqvarna 532-14-04-01 MTD 725-1745 Sears 140403	**Ignition Key Molded Grip** Use with Oregon® 33-376 and other plastic Delta switches	
33-094	Universal	**Ignition Key** Molded grip cover and key ring Use with Oregon 33-376 and other plastic Delta switches	
33-089	MTD 725-1660 Tecumseh 35062	**Plastic Ignition Key** For snow throwers with Tecumseh engines	
33-256	MTD 951-10630 MTD 751-10630 MTD 731-05632 Cub Cadet 951-10630 Cub Cadet 751-10630 Cub Cadet 731-05632	**Ignition Key** Fits 31A model series snow throwers (2008–2014)	

PTO Switches

33-093	Universal	**PTO Switch** Push–pull, snap mount Yellow knob 8 terminal	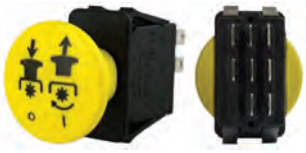
33-002	Ariens 522100 Ariens 1545600 Exmark 633673 John Deere AM118802 John Deere AM119139 Kubota K1211-62230 Scag 481635 Snapper 2-8542	**PTO Switch** Push-pull, snap mount 5 terminal Toro 93-9999 Toro 95-4108 Toro 95-7489	
33-081	AYP 174651	**PTO Switch** Push–pull, snap mount Black knob 8 terminal	
33-082	Bunton/Bobcat 2188153	**PTO Switch** Push–pull, snap mount Red knob 5 terminal	

S

OREGON	Replaces	Description	Product Code

PTO Switches

33-083	MTD 925-04175 MTD 925-04258	**PTO Switch** Push–pull, snap mount Gold tear-drop knob 7 terminal	
33-410	Scag 48787 Ariens 36024 Grasshopper 604796 Grasshopper 184082 Woods 70422	**PTO Switch** 6-post	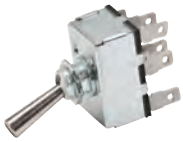
33-384	Toro 37-2610 Toro 92-6328 Bobcat 128009 Gravely 45848 Power King 03-7101 Snapper 1-9545	**PTO Switch** For electromagnetic PTO clutches Snapper 7019545 John Deere AM39489	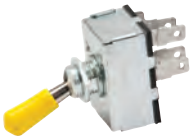

Safety Switches

33-382	MTD 925-0803C MTD 725-0803C	**Safety Switch** Plunger type N.O. / N.C., 2-position, 4 terminals For models 698 & 699	
33-028	Ariens 88281 AYP 109553X; Bobcat 108208 Bush Hog 99073 Dixon 4242 Encore 523034 Exmark 633111 Ferris 22095 High Sierra 1848H High Sierra 934027	**Safety Switch** Plunger type N.O. / N.C. 2-position 4 terminals High Sierra 2248H Howard Price 02-425 John Deere AM1288925 MTD 925-3169A	
33-026	MTD 725-3164A MTD 925-3164A AYP 153664 Cub Cadet 725-3164A Cub Cadet 925-3164A Kees 101080 Snapper 2-2886 Snapper 7022886 Snapper 1723507	**Safety Switch** Plunger type Snap Mount N.O. / N.C. 2-position 4 terminals Snapper 1732006 Troy Bilt 1751328	
33-027	Ariens 30957 AYP 109869X Exmark 38383 Ferris 21769 Great Dane D38085 John Deere AM108483 Kees 923408 Snapper 2-7225 Snapper 7027225	**Safety Switch** Fits Ariens Grand Sierra 22 HP models 931038-000101 and 931303-00101 with Kohler engines. N.C. 2-position, 2 terminals	

S

Switches

OREGON	Replaces	Description	Product Code

Safety Switches

33-015

Replaces: Ariens 357100, Bobcat/Bunton 38382, John Deere AM104884, Murray 24273, Murray 024273, Murray 024273MA, Murray MU24273, Scag 481637

Safety Switch
Plunger type
N.O.
2-position
2 terminals

33-240

Replaces: Cub Cadet 925-0268, MTD 925-0268, MTD 725-0268, Noma 41204

Safety Switch
Plunger type
N.O
2-position, 2 terminal
Requires 1/2" mounting hole
Length: 2-1/8"

33-084

Replaces: MTD 925-1657A, MTD 725-1657A, MTD 725-1657, Bobcat 38383, Cub Cadet 925-1657A, Cub Cadet 725-1657A, Cub Cadet 725-1657

Safety Switch
Plunger type
N.O. / N.C.
2-position
4 terminals

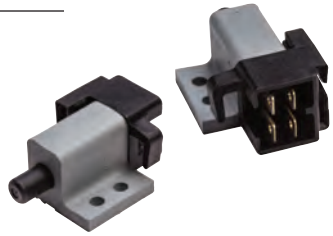

33-085

Replaces: John Deere GY20094, Murray 94136, Murray 094136, Murray 094136MA, Murray MU094136, Murray MU094136MA, Murray MU91436

Safety Switch
Plunger type
Rail mount
N.O. / N.C.
2-position
4 terminals

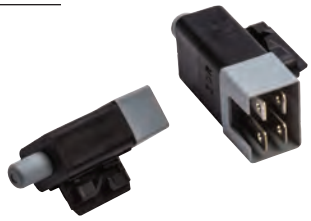

Seat Switches

33-019

Replaces: Scag 48717, AYP 121305X, Cub Cadet 925-3166, Exmark 740275, John Deere AM104403, MTD 725-3166, MTD 925-3166

Seat Switch
Plunger type
Right angle
Snap Mount
N.C.
2-position
2 terminals

33-090

Replaces: Cub Cadet 01003277

Seat Switch
Screw mount
For seats with 2-3/4"hole
N.C.
2-position
2 terminals

Switch Connectors

33-086

Replaces: Universal

1 Pole Standard Connector
For many single pole normally open or normally closed switches

S

OREGON	Replaces	Description	Product Code	

Switch Connectors

33-350	AYP 148699 Ariens 23478 John Deere M90206	**Connector** 5-way multiple For all terminal ignition switches		
33-351		**Connector** For all of our connectors listed on previous page		

Miscellaneous Switches

33-206	Universal	**Toggle Switch** For chainsaws & trimmers 2 terminal ends		
33-207	Universal	**Toggle Switch** For chainsaws & trimmers Single terminal end		
33-180	Husqvarna 503 717901	**Stop Switch** For many Husqvarna and Dolmar chainsaw models		
33-158	Husqvarna 503718201	**On/Off Switch** Fits chainsaw models 232L, 232R, 235FR, 235R, 324LDX, 324LX, 324RX, 326, 336, 339XPT, & 385, for trimmer models 123C, 123HD, 123L, 123LD, 225AI, 225B, 225BX, 225E, 225H, 225HBV, 225L, 225LD, 225 LITE, 225R, 225RD, 225RJ, 227L, 227JD, 227R, 227RD, 227RJ, 232L, 232R, 232RD, 232RL, 235R, 235RL, 240, 240R, & 240RBD		
33-023	Toro 29-5560 Toro 40-5940	**Stop Switch** For model S200 and S620 snow blowers Also fits 32", 36", 37", 44", and 52" mid-sized commercial mowers with pull start		
33-013	Honda 36100-883-005 Honda 36100-ZE1-015	**Stop Switch** Fits most Honda engines		

S

Switches

OREGON	Replaces	Description	Product Code	
Oil Sensor Switches				
33-542	Honda 34150-ZH7-003	**Oil Alert Diode Assembly** Fits GX160-390 engines		
33-540	Honda 15510-ZE2-033	**Oil Level Sensor Switch** Fits GX240-390 engines		
33-541	Honda 15510-ZE1-033	**Oil Level Sensor Switch** Fits GX160 engines		
On/Off Switches				
33-021	Snapper 1-2623 Snapper 7012623	**Electric Start Push Button** High amperage switch Use with Oregon® 33-390		

Can't find what you're looking for?
Try us online to search the latest products available.

OregonProducts.com

SECTIONS T–W

Tiller Parts . . . . . LG 952–954

Tires, Tubes, & Tire Chains . . . . . LG 955–965

Timmer LInes & Heads . . . . . LG 966–1013

Trimmer Brush Cutter Blades. . . LG 1014–1015

Trimmer & Blower Parts . . . . . LG 1016–1028

Wheels . . . . . LG 1029–1047

Tiller Parts

OREGON	Replaces	Description	Product Code

Tiller Tines

84-101 Troy Bilt 1901118

Tiller Tine Set
For Pony & Horse model tillers
Includes 8 RH & 8 LH bolo tines
Includes hardware

84-102 Troy Bilt 1270-1A
AYP 6554J
AYP 4459J

Tine LH
For Pony & Horse models

84-103 Troy Bilt 1270-2A
AYP 6555J
AYP 4460J

Tine RH
For Pony & Horse models

Troy Bilt

49-050 Troy Bilt 9618

Tine Axle Seal
For Horse model tillers
OD: 2", ID: 1.250", thickness: 1/2"

49-051 Troy Bilt 9621

Wheel Axle
For Horse model tillers
OD: 1.5", ID: 1", thickness: 3/8"

T

Tech Tip — How to Measure a Tire

Basic Tire Dimensions

Tire Sizes

- Size designations consist of 2 or 3 numbers separated by X, - or /
- The designations for tires sold by Oregon® are explained below.
- All dimensions are for inflated tires.

Industrial Sizes

B C D
410/350-4
4.1" 3½" 4"

L & G Tires

A B D
16x650-8
16" 6½" 8"

High-Speed Trailer Tires

B D
480-12
4.8" 12"

T

Innertubes

OREGON	Size	Valve	Product Code
4" Tubes			
71-109	280 / 250-4	Bent Valve	
71-274	280 / 250-4	Bent Valve Parallel	
71-401	9 x 350-4	Bent Valve	
71-402	9 x 350-4	Bent Valve Parallel	
71-400	410 / 350-4	Bent Valve	
71-275	410 / 350-4	Bent Valve Parallel	
71-276	410 / 350-4	Straight Valve	
5" Tubes			
71-277	340 / 300-5	Bent Valve	
71-511	11 x 400-5	Bent Valve	
71-403	11 x 400-5	Straight Valve	
6" Tubes			
71-610	410 / 350-6	Straight Valve	
71-600	410 / 350-6	Bent Valve	
71-602	410 / 350-6	Bent Valve Parallel	
71-096	13 x 500-6	Straight Valve	
71-101	13 x 500-6	Bent Valve	
71-250	13 x 650-6	Straight Valve	
71-280	13 x 650-6	Bent Valve	
71-102	15 x 600-6	Straight Valve	
71-405	15 x 600-6	Bent Valve	
7" Tubes			
71-099	16 x 800-7	Straight Metal Valve	
8" Tubes			
71-110	300-8	Straight Valve	
71-103	400-8	Straight Valve	
71-800	480 / 400-8	Straight Valve	
71-801	480 / 400-8	Bent Valve Parallel	
71-415	570-8	Bent Metal Valve	
71-816	16 x 650-8	Straight Valve	
71-406	18 x 650-8	Straight Valve	
71-104	18 x 850-8 / 18 x 950-8	Straight Valve	
71-409	20 x 700-8	Straight Valve	
71-004	20 x 800-8	Straight Valve	
71-407	20 x 1000-8	Straight Valve	
71-098	22 x 1100-8 / 21 x 1200-8	Straight Valve	
9" Tubes			
71-410	20 x 1000-9 / 20 x 1100-9	Straight Valve	
71-097	23 x 1200-9 / 25 x 1300-9	Straight Valve	
10" Tubes			
71-100	20 x 800-10	Straight Valve	
71-411	22 x 800-10	Straight Valve	
71-412	22 x 1100-10	Straight Valve	
71-003	20 x 1000-10	Straight Valve	

71-274

71-103

71-276

T

Innertubes

OREGON	Size	Valve	Product Code
12" Tubes			
71-417	480-12	Straight Valve	
71-418	530-12	Straight Valve	
71-273	600-12	Straight Valve	
71-105	23 x 850 / 950-12	Straight Valve	
71-408	23 x 1050-12	Straight Valve	
71-283	26 x 1200-12	Straight Valve	
14" Tubes			
71-424-0	7.00-14 thru 8.55-14	Straight Valve	
15" Tubes			
71-425-0	7.00-15 thru 9.15-15	Straight Valve	
16" Tubes			
71-107	16 x 2.125	Schrader Thornproof	
20" Tubes			
71-106	20 x 2.125	Schrader Valve	
71-108	20 x 2.125	Schrader Thornproof	
26" Tubes			
71-111	26 x 2.125	Schrader Thornproof	
Metric Tubes			
71-322	200mm x 50mm	Innertube for Scooter	

71-274

71-103

Valve Stems

OREGON	Size	Product Code
71-001	Short	
71-002	Long	

71-001 71-002

Wheelbarrow Rib

Size	Ply Rating	OREGON	KENDA / CST	CARLISLE
400-6	2	58-011	—	—
480/400-8	2	58-012	—	—
	4	58-013	—	—

Stud Tread

Size	Ply Rating	OREGON	KENDA / CST	CARLISLE
410/350-4	2	58-020	—	—
410/350-5	2	58-021	—	—
410/350-6	2	58-022	—	—
530/450-6	2	58-023	—	—
480/400-8	2	58-024	—	—

T

Tires, Tubes, & Tire Chains

AT101 Tread / Tital / Chevron Bar

Size	Ply Rating	OREGON	KENDA / CST	CARLISLE
21 x 1100 x 8	4	—	—	70-142
21 x 1100 x 10	4	—	—	70-143
24 x 12 x 12	4	—	—	70-394

Wheel not included

Agricultural Lug / Power Trac / Bar Tread / Tru Power / Super Lug

Size	Ply Rating	OREGON	KENDA / CST	CARLISLE
480/400-8	2	58-050	—	70-343
13 x 500-6	2	58-397	—	70-397
16 x 650-8	4	58-360	—	—
18 x 850 - 10	4	—	—	70-393
18 x 950-8	2	—	—	70-378
20 x 1000 -8	4	—	—	70-357
23 x 850-12	4	—	—	70-353
23 x 1050 - 12	4	—	—	70-380
26 x 12 - 12	4	—	—	70-359

Wheel not included

Snow Thrower / Polartrac / Snow Hog Tread

Size	Ply Rating	OREGON	KENDA / CST	CARLISLE
410/350-4	2	58-361	—	70-361
410/350-6	2	58-356	—	70-356
13 x 500-6	2	58-242	—	70-376
15 x 500-6	2	58-362	—	70-362
16 x 650-8	2	58-375	—	70-375
480/400-8	2	58-358	—	70-358

X-Trac

Size	Ply Rating	OREGON	KENDA / CST	CARLISLE
13 x 500-6	2	—	—	70-403
15 x 500-6	2	—	—	70-404
16 x 650-8	2	—	—	70-405

Turf / Chevron / Turf Saver Tread

Size	Ply Rating	OREGON	KENDA / CST	CARLISLE
9 x 350-4	2	58-398	—	—
	4	—	—	70-398
11 x 400-4	2	58-061	—	70-301
410 / 350-4	2	58-302	—	70-302
11 x 400-5	2	58-063	—	70-308
13 x 500-6	2	58-064	—	70-312
	4	58-065	—	70-314
13 x 650-6	2	58-066	—	70-316
	4	58-067	—	70-317
15 x 600-6	2	58-068	—	70-320
	4	58-069	—	—
480 / 400-8	2	—	—	70-344
16 x 650-8	2	58-071	—	70-326
	4	58-072	—	70-328
16 x 750-8	2	58-088	—	70-330
18 x 650-8	2	—	—	70-331
	4	58-332	—	70-332
18 x 850-8	2	58-074	—	70-334
	4	58-075	—	70-335
18 x 950-8	2	58-076	—	—
	4	58-077	—	70-338
18 x 750-8	4	—	—	70-144
20 x 800-8	2	58-078	—	70-340
	4	58-087	—	—
20 x 800-10	4	—	—	—
20 x 1000-8	2	58-079	—	70-339
20 x 1000-10	4	—	—	70-349
22 x 950-12	2	—	—	70-145
23 x 850-12	4	—	—	70-352
23 x 950-12	2	—	—	70-355
23 x 1050-12	4	—	—	70-351
24 x 1200-12	2	—		70-146

T

Tires, Tubes, & Tire Chains

Turf Saver Tread II

Size	Ply Rating	OREGON	KENDA / CST	CARLISLE
18x850-8	2	—	—	70-147
20x800-8	2	—	—	70-148

Wheel not included

Straight Rib / Golf Rib Tread

Size	Ply Rating	OREGON	KENDA / CST	CARLISLE
11x400-5	2	58-110	—	—
	4	—	—	70-307
13x500-6	4	58-112	—	70-315
13x650-6	4	58-119	—	70-409
15x600-6	4	58-114	—	70-321
16 x 650-8	4	58-329	—	70-329
18x850-8	4	58-117	—	—
18x950-8	4	—	—	70-150

Smooth Tread

Size	Ply Rating	OREGON	KENDA / CST	CARLISLE
9x350-4	4	58-131	—	70-306
410/350-4	4	58-132	—	—
410/350-5	4	58-133	—	—
13x500-6	4	58-135	—	70-311
13x650-6	4	58-399	—	70-399
18x950-8	4	—	—	70-377

Rib High-Speed Trailer

Size	Load Range	OREGON	KENDA / CST	CARLISLE
4.80-8	LRB	58-150	—	70-149
5.7-8	LRB	—	—	70-151
	LRC	—	—	70-152
4.80-12	LRB	—	—	70-153
18.5x8.50-8	LRB	—	—	70-157

Sawtooth Tread

Size	Ply Rating	OREGON	KENDA / CST	CARLISLE
280/250-4	4	58-001	—	—
410/350-4	2	58-040	—	—
	4	58-041	—	—
410/350-6	2	58-043	—	—

Turf / Turf Master Tread

Size	Ply Rating	OREGON	KENDA / CST	CARLISLE
13x650-6	4	—	—	70-364
15x600-6	4	—	—	70-365
15x650-8	2	—	—	70-396
16x650-8	4	—	—	70-366
16x750-8	4	—	—	70-367
18x650-8	4	—	—	70-392
18x850-8	4	—	—	70-368
18x950-8	4	—	—	70-369
20x1000-8	4	—	—	70-370
20x1000-10	4	—	—	70-371
22x950-12	4	—	—	70-154
23x850-12	4	—	—	70-156
23x950-12	4	—	—	70-372
23x1050-12	4	—	—	70-373
26x1200-12	4	—	—	—

Wheel not included

Can't find what you're looking for?
Try us online to search the latest products available.

OregonProducts.com

Tires, Tubes, & Tire Chains

Magnum (Cheng Shin) / Super Turf (Kenda)

Size	Ply Rating	OREGON	KENDA / CST	CARLISLE
11 x 400-5	4	—	66-200	—
410/350-4	4	—	68-213	—
15 x 600-6	4	—	66-202	—
16 x 650-8	4	—	66-203	—
16 x 750-8	4	—	68-204	—
18 x 750-8	4	—	68-214	—
18 x 850-8	4	—	66-205	—
18 x 950-8	4	—	66-206	—
20 x 1000-8	4	—	66-207	—
20 x 1050-8	4	—	68-373	—
23 x 850-12	4	—	66-208	—
23 x 950-12	4	—	68-374	—
23 x 1050-12	4	—	66-209	—
24 x 1200-12	4	—	68-211	—
26 x 1200-12	4	—	68-210	—

Wheel not included

Turf Smart Tread

18 x 8.50-8NHS	4	—	—	70-415
18 x 8.50-10NHS	4	—	—	70-420
20 x 8.00-10NHS	4	—	—	70-419
20 x 10.00-8NHS	4	—	—	70-418
20 x 10.00-10NHS	4	—	—	70-417
22 x 11.00-10NHS	4	—	—	70-410
22 x 9.50-12NHS	4	—	—	70-416
23 x 9.50-12NHS	4	—	—	70-421
23 x 10.50-12NHS	4	—	—	70-414
24 x 9.50-12NHS	4	—	—	70-413
24 x 12.00-12NHS	4	—	—	70-412
26 x 12.00-12NHS	4	—	—	70-411

Wheel not included

T

Turf CTR

Size	Ply Rating	OREGON	KENDA / CST	CARLISLE
22 x 1100-8	4	—	—	70-363

Wheel not included

Turf Mate

Size	Ply Rating	OREGON	KENDA / CST	CARLISLE
20 x 1000-8	4	—	—	70-379

Wheel not included

Golf Tread

Size	Ply Rating	OREGON	KENDA / CST	CARLISLE
18 x 850-8	4	58-160	—	—

Links Golf Cart Tire

Size	Ply Rating	OREGON	KENDA / CST	CARLISLE
18 x 850-8	4	—	—	70-333

Wheel not included

Scorpion / ATV Knobby Tread

Size	Ply Rating	OREGON	KENDA / CST	CARLISLE
145/70-6	2	58-300	—	—
18 x 950-8	2	—	—	—
25 x 1200-9	2	—	—	—

T

Tires, Tubes, & Tire Chains

All Trail II (Carlisle)

Size	Ply Rating	OREGON	KENDA / CST	CARLISLE
22 x 950-10	4	—	—	70-161
23 x 1050-12	4	—	—	70-162
24 x 950-10	4	—	—	70-163
24 x 1050-10	4	—	—	70-164
25 x 900-12	4	—	—	70-165
25 x 1100-12	4	—	—	70-166

Wheel not included

AT489 Tread (Carlisle)

Size	Ply Rating	OREGON	KENDA / CST	CARLISLE
25 x 800-12	4	—	—	70-158
25 x 1000-12	4	—	—	70-159
25 x 1100-12	4	—	—	70-160

Wheel not included

Solid Foam, Flat-Free Tires

OREGON	Size	Type	Product Code
Sawtooth			
70-706	410 / 350-4	solid foam	
Smooth Tread			
70-701	9 x 350-4	solid foam	
70-710	11 x 400-5	solid foam	

- Maintenance free, flat-free, resists cracking, oil and gasoline resistant.
- Will not de-form.

Sawtooth

Smooth Tread

Tire Wrap

OREGON	Replaces	Description	Product Code
70-422	Toro 53-7740	**Tire Wrap** For Toro walk-behind & self-propelled mowers OD: 8", width: 2"	

T

Tire Chains

OREGON	Spacing	Size / Type		Product Code
Lawn & Garden Tire Chains (twist link style)				
67-012	2	410 / 350-4 340 / 350-5		
67-020	2	410 / 350-5 12.25 x 350-6	12 x 350-6 410 / 350-6	
67-009	2	410 / 350-6 (Deep Lug - Snow Hawg)		
67-003	2	530-450-6		
67-010	2	13 x 500-6		
67-007	2	13-500-6 (Deep Lug - Snow Hawg)		
67-013	2	480 / 400-8		
67-008	2	480 / 400-8 (Deep Lug - Snow Hawg)		
67-001	2	16 x 650-8 15 x 600-6		
67-004	2	16 x 650-8 (Deep Lug - Snow Hawg)		
67-005	2	18 x 850-8		
67-018	2	18 x 950-8		
67-017	2	20 x 800-10 20 x 800-8		
67-002	2	20 x 1000-10 20 x 1000-8		
67-014	2	23 x 850-12		
67-015	2	23 x 950-12 23 x 1050-12		
67-011	4	23 x 950-12 23 x 1050-12		
67-019	2	12 x 12 26 x 1200-12 27 x 1200-12		
ATV Tire Chains (v-link style)				
67-021	2	22 x 1100-8 25 x 1100-8 22 x 1000-9	22 x 1000-10 22 x 1100-10 22 x 800-11	
67-022	2	24 x 1100-8 24 x 1100-9 25 x 1200-9 24 x 1300-9 25 x 1300-9 25 x 1350-12	25 x 1000-10 25 x 1100-10 25 x 1200-10 25 x 1000-12 23 x 1050-12	
67-026	2	24 x 1100-10 24 x 1000-11 25 x 800-12	24 x 900-11 23 x 1000-12	
67-024	4	24 x 1100-8 25 x 1100-10 25 x 1000-12 24 x 1100-9 25 x 1200-9 25 x 1350-12	25 x 1000-10 25 x 1200-10 23 x 1050-12 24 x 1300-9 25 x 1300-9	

PLEASE NOTE: Because of variances in tire dimensions, tire chains may require shortening to fit your tire properly. Chains should not fit too tightly to the tire. They should be just snug enough to stay on during use. Bungee cords may be used to add tension.

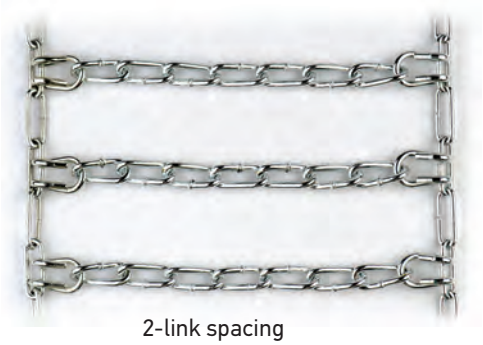

2-link spacing

Twisted link detail

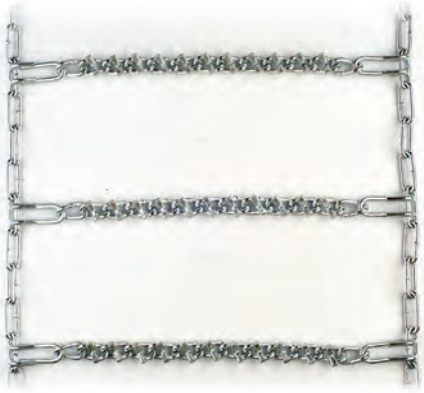

4-link spacing

V-link detail

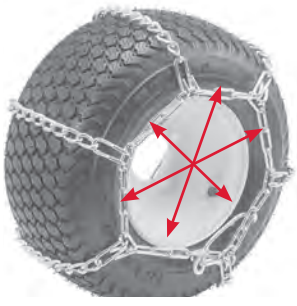

Bungee cords may be used here to add tension.

T

Trimmer Line and Heads

Trimmer Line and Heads

Gator® SpeedLoad™ . . . . . LG 968–978
BioTrim™ Trimmer Line . . . . . LG 978
Platinum Gatorline™ . . . . . LG 979
SuperTwist Magnum Gatorline™ . . . . . LG 979
Magnum Gatorline™ . . . . . LG 980
Gatorline™ . . . . . LG 981
Oregon® Trimmer Line . . . . . LG 982
Gatorline™ Pre-Cut Lengths, Red Gatorline™ . . . . . LG 983
FlexiBlade™ Trimmer Line . . . . . LG 984
Bump and Feed Replacement Trimmer Heads . . . . . LG 985–994
Quick Load Replacement Trimmer Heads . . . . . LG 995–996
Trimmers and Brushcutter Safety Information . . . . . LG 997
Trimmer Head Application Chart . . . . . LG 998–1013
Brush Cutter Blades . . . . . LG 1014–1015

T

Gator® SpeedLoad™

Trimmer Head & Line System

FAST, EASY, DURABLE

It's a revolutionary and Oregon® exclusive string trimmer cutting system.
The system is composed of a durable plastic head and disk shaped line.
The self-contained trimmer line disk makes reloading line fast and easy.

FAST, EASY, DURABLE

OregonProducts.com/GSL

Why Gator® SpeedLoad™

Traditional string trimmer, trimmer lines and heads are ***sources of frustration.***

A survey made in May 2015 with 300 professionals and 300 homeowners has indicated that more than 70% of string trimmer users are confronted with problems when dealing with string trimmer accessories.

NO WINDING, NO HASSLE

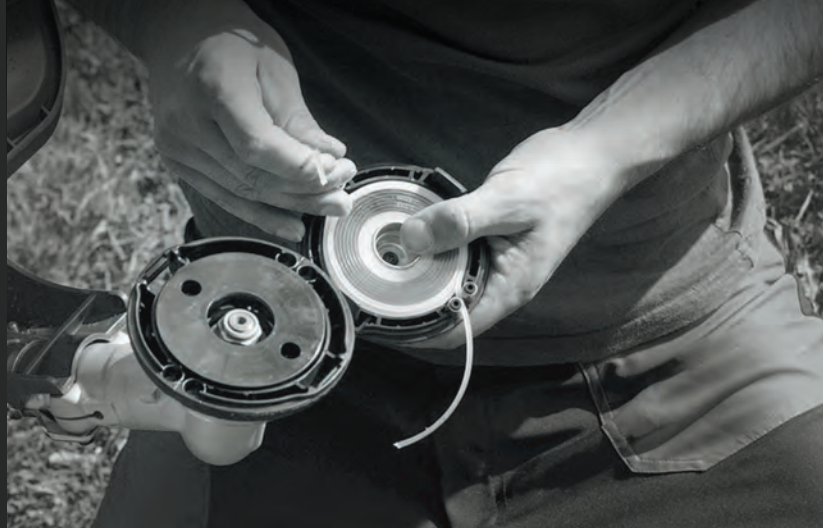

As a great example of Oregon's best-in-class innovation, Gator SpeedLoad heads are available in 2 different package types.

RETAIL PACKAGING

The two smaller heads are in a clamshell while the large head is in a cardboard box.

24-200

24-250

24-500

DEALER PACKAGING

Meant for dealerships and online sales. The two heads will be available in economy cardboard boxes.

24-200-B

24-250-B

Dealer boxes come in a displayable shipper that folds into an attractive counter display box and holds 6 heads per shipper.

Gator® SpeedLoad™

Load in less than 20 seconds

Lasts up to twice as long

Tested & approved by the largest US landscaping company

UNIVERSAL
Fits most gas brushcutters & trimmers

PLASTIC HEAD
Improved toughness,
extremely resistant to wear & shocks

NO LOOSE PARTS
Eliminates the hassle and expense of replacing lost parts

DISK SHAPED LINE
Each disk represents a full load
No need to deal with messy spools anymore
Fits inside of a pocket and easy-to-carry
Small size means less inventory space
Reduced packaging

HEAT-TREATED DISK
Twice the resistance of standard line

SIDE TAPS
Easy to open, no tools needed

TAP AND GO
Advance the line while trimming

T

3 Trimmer Heads Fit Most Trimmers

Including popular models from...

Homelite
Ryobi

Straight Shaft

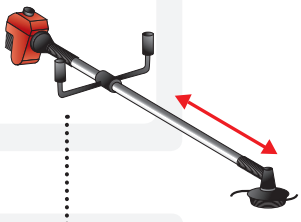

Homelite
Ryobi
Echo
Husqvarna
Stihl

Curved Shaft

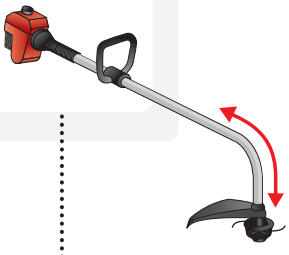

> 25 cc

24-200

Echo
Husqvarna
Stihl

Straight Shaft

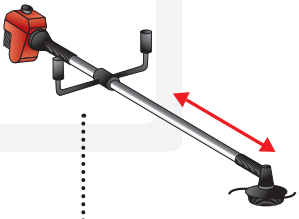

< 33 cc

24-250

> 33 cc

24-500

Pack Quantity	0.080" 2,0 mm	0.095" 2,4 mm	0.095" 2,4 mm	0.118" 3,0 mm
3 disks	24-280-03	24-295-03	24-595-03	24-518-03
10 disks	24-280-10	24-295-10	24-595-10	24-518-10
25 disks	24-280-25	24-295-25	24-595-25	24-518-25

For the complete listing of makes and models, refer to ***Gator® SpeedLoad™ Application Chart*** on the following pages.

T

Gator® SpeedLoad™

4-1/4" Gator SpeedLoad Trimmer Heads

581647

OREGON	Description	Product Code
24-200	**4-1/4" Gator SpeedLoad Trimmer Head – Display Package** Diameter: 4-1/4" (105mm), weight: 252 g. Use with Oregon® small diameter disks. Fits most curved and straight-shaft Ryobi, Homelite, Toro, Troy Bilt and Bolens trimmers. Also fits Stihl curved-shaft units. **English and Spanish language** Mounting hardware: extended adaptor, 5/16"-18 RH bolt, 5/16"-18 LH bolt, and 8mm x 1.25 RH nut.	
24-200-C	Display Package of Oregon of 24-200 for Canada **English and French language**	
24-250	**4-1/4" Gator SpeedLoad Trimmer Head – Display Package** Diameter: 4-1/4" (105mm), weight: 252 g. Use with Oregon small diameter disks. Fits most curved and straight-shaft Echo, Husqvarna, Shindaiwa, Efco, and other trimmers. Also fits Stihl straight-shaft units. **English and Spanish language** Mounting Hardware: (#1) 8 mm x 1.25 LHM/F, (#2) 10 mm x 1.25 LHM/F, (#3) 7 mm x 1.0 LHM, 10 mm x 1.0 LHF, (#4) 3/8-24 RHM & 8 mm x 1.25 RHM	
24-250-C	Display Package of Oregon of 24-250 for Canada **English and French language**	
24-275	**4-1/4" Gator SpeedLoad Trimmer Head – Display Package** Diameter: 4-1/4" (105 mm), weight: 252 g. Use with Oregon small diameter disks. For use on straight-shaft trimmers and brush cutters only. Comes with washers to fit Stihl, Husqvarna, Echo, and other brushcutters. Designed to fit brushcutter models that only have 20 mm or 25 mm mounting hubs. Brushcutter models are units that can also accept brushcutter blades. Included components: (1) 8mm, (1) 10mm, (1) 12mm, and (2) 16mm washers, and (1) reducer bushing to go from 20mm to 25mm. Nut to secure trimmer head to gear case is not included.	

5" Gator SpeedLoad Pro Trimmer Head

24-500	**5" Gator SpeedLoad Trimmer Head – Display Package** Diameter: 5" (130mm), weight: 354 g. Use with Oregon large diameter disks. Fits most straight-shaft Echo, Stihl, Husqvarna, Shindaiwa, Efco, and other trimmers **English, French and Spanish language** Mounting Hardware: (#1) 8 mm x 1.25 LHM/F, (#2) 10 mm x 1.25 LHM/F, (#3) 7 mm x 1.0 LHM, 10 mm x 1.0 LHF	
24-550	**5" Gator SpeedLoad Trimmer Head – Display Package** Diameter: 5" (130 mm), weight: 354 g. Use with Oregon large diameter disks. For use on straight-shaft trimmers and brush cutters only. Comes with adaptor washers to fit Stihl, Husqvarna, Echo, and other brushcutters. Designed to fit brushcutter models that only have 20 mm or 25 mm mounting hubs. Brushcutter models are units that can also accept brushcutter blades. Included components: (1) 8mm, (1) 10mm, (1) 12mm, and (2) 16mm washers, and (1) reducer bushing to go from 20 mm to 25 mm. Nut to secure trimmer head to gear case is not included.	

T

Replacement Trimmer Line

OREGON	Description	Product Code
Small Replacement Disks for Oregon® 24-200, 24-250, & 24-275		
24-280-03	(3) – 0.080" (2.0 mm), Small Diameter Disks	
24-280-10	(10) – 0.080" (2.0 mm), Small Diameter Disks	
24-280-25	(25) – 0.080" (2.0 mm), Small Diameter Disks	
24-295-03	(3) – 0.095" (2.4 mm), Small Diameter Disks	
24-295-10	(10) – 0.095" (2.4 mm), Small Diameter Disks	
24-295-25	(25) – 0.095" (2.4 mm), Small Diameter Disks	
Large Replacement Disks for Oregon 24-500 & 24-550		
24-595-03	(3) – 0.095" (2.4 mm), Large Diameter Disks	
24-595-10	(10) – 0.095" (2.4 mm), Large Diameter Disks	
24-595-25	(25) – 0.095" (2.4 mm), Large Diameter Disks	
24-518-03	(3) – 0.118" (3.0 mm), Large Diameter Disks	
24-518-10	(10) – 0.118" (3.0 mm), Large Diameter Disks	
24-518-25	(25) – 0.118" (3.0 mm), Large Diameter Disks	

Replacement Parts

OREGON	Replacement Parts	Fits	Product Code
24-101	Bump Knob with Screw	24-200 & 24-250	
24-102	Lower Assembly	24-200 & 24-250	
24-103	Bump Knob with Screw	24-500	
24-104	Lower Assembly	24-500	

Adaptors & Mounting Nuts for Arbors

OREGON	Description	Product Code
Adaptor		
24-009	12 mm x 1.75 LHF Adaptor Use with Oregon 24-250 & 24-500 Gator SpeedLoad heads	
Mounting Nuts for Oregon 24-275 & 24-550		
24-008	8 mm x 1.25 LHF Nut This is not an arbor bolt and is only to be used for mounting Gator SpeedLoad trimmer heads to brushcutters. Not to be used for mounting brushcutter blades.	
24-010	10 mm x 1.25 LHF Nut This is not an arbor bolt and is only to be used for mounting Gator SpeedLoad trimmer heads to brushcutters. Not to be used for mounting brushcutter blades.	
24-011	10mm x 1.0 LHF nut This is not an arbor bolt and is only to be used for mounting Gator SpeedLoad heads to brushcutters. Not to be used for mounting brushcutter blades.	
24-012	12mm x 1.75 LHF nut This is not an arbor bolt and is only to be used for mounting Gator SpeedLoad heads to brushcutters. Not to be used for mounting brushcutter blades.	

Gator® SpeedLoad™ Application Chart

OEM Model Numbers	4-1/4"	5"
Alpina	For Canada, add -C	
21, 25, 30, 34, 34D, 34F, 42, 42D, 42F, 52, 52D, 52F, 160, 170, 180, 200, 210	24-250	24-500
Ariens		
BC-350, BC-400, TB-220E, TB260	24-250	24-500
Arimitsu		
AC-ZEK, ACC-17, ACD-17, ACD-18, ACE-30, AM-31, AM31K, AM40, AM-50, ACC-15, AM-16D, AM-24D	24-250	24-500
Astron		
S250 (1984, 1986), S150 (1986), S250(1983), 256E, KFS4 SERIES, KFS12, KFS22, KFS24, P750, PK2400E, PK3300E, S250 (1988)	24-250	
Black+Decker		
82255, 82257, 82267. 8271-04, 8289-4	24-250	
Blue Max		
52623	24-250	24-500
Bolens		
BL250	24-250	
BL100, BL110, BL150, BL160	24-200	
Brush King		
BK32, BK32LT, BK49, BK85, BK100	24-250	
Bunton		
LBS 18K, LB 24S K	24-250	
Cub Cadet		
CC212, CC330, CC350, CS202, ST202, ST4125, ST4175	24-200	
BC210, BC280, BC490, BC509, BC2090, BC5090, CC370, SS270, SS418, SS470, ST227S, ST228, ST426S, ST428	24-250	
Danarm		
32, 35, 40, 50, MK2, MK23E, MK3, TORNADO, WHIPPER MK3	24-250	
Dolmar (see SACHS)		
BC-225, BC250, BC337, BC377, BC400, LT-154, LT225, LT250BC300, LT250, LT250, MS220, MS2300, MS2600, MS3100, MX20C, MS2501, MS28210, MS3210, NB2, NBA231, NB, NB01F, NB02, NB16F, NB2, NB211, NBF171, NB26, NB31, MS340, NB03, NB04, NB26, NB40, NB411, NB50, PRO370, PRO400, SD330	24-250	24-500
BC210, BC212, BDC212, LT16, LT20,	24-250	
Echo		
GT100, GT140, GT140A, GT140B, GT160, GT160AE, GT200, GT200A, GT200B, GT200BE, GT200CE, GT225, GT225C, GT225IC, GT225L, GT251, GT1000, GT1100, GT1100A, GT2000, GT2000SB, GT2100, GT2101, GT2102, GT2103, GT2200, GT2301, GT2400, SRM2000, SRM210AE	24-250	
GT2010, PAS225VP, PAS225VPC, RMA2530, SRA2190, SRM140, SRM140A, SRM140D, SRM140DA, SRM200A, SRM200AE, SRM200BE, SRM200CE, SRM200D, SRM200DA, SRM200DB, SRM200DE, SRM202, SRM202DA, SRM202FA, SRM210, SRM210AE, SRM210E, SRM210I, SRM210SB, SRM210U, SRM220, SRM225, SRM225C, SRM225I, SRM225IC, SRM225SB, SRM225U, SRM226T, SRM230, SRM230S, SRM230SP, SRM230SPC, SRM250, SRM250E, SRM250EL, SRM250EU, SRM251, SRM260, SRM260S, SRM260U, SRM261, SRM265, SRM265S, SRM265T, SRM265U, SRM266, SRM266S, SRM266SC, SRM266T, SRM266TC, SRM1500, SRM1500A, SRM1501, SRM2090, SRM2090L, SRM2090U, SRM2010L, SRM2100, SRM2100SB, SRM2101, SRM2110, SRM2200, SRM2201, SRM2300, SRM2301, SRM2350, SRM2400, SRM2400SB, SRM2410, SRM2450, SRM2500, SRM2501, SRM2501S, SRM2502, SRM2510, SRM2530, SRM2601	24-250	
CLS4600, RM310, RM380, RM460, SRM280, SRM280C, SRM280S, SRM280SC, SRM280T, SRM280TC, SRM280U, SRM280UC, SRM300, SRM300AE, SRM300AE1, SRM300E, SRM300E1, SRM300U, SRM302, SRM302ADX, SRM302BDX, SRM303E, SRM310, SRM310U, SRM311, SRM311S, SRM311U, SRM330, SRM340, SRM343, SRM343SL, SRM350, SRM400, SRM400AE, SRM400B, SRM400BE, SRM400E, SRM400U, SRM402DE, SRM410U, SRM500, SRM501, SRM3000, SRM3001, SRM3010, SRM3100, SRM3100S, SRM3110, SRM3400, SRM3410, SRM3500, SRM3550, SRM3800, SRM4600	24-250	24-500
Efco		
200, 220IC, 260, 260D, 261, 261A, 300A, 300AIC, 301, 310, 350, 410, 400A, 460, 460AVS, 835, 2201C, 2601C, 2601CAV, 26501CAV, 8060, 8100, 8200, 8220IC, 8300, 8350, 8400, 8400IC, 8420, 8420IC, 8425, 8510, 8510IC, 8515, DS2200S, DS2200T, DS2200TR, DS2400S, DS2400T, DS2700S, DS2800S, DS2800T, DS3000T, DS3500S, DS3500T, JET200, JET300, JET301, JET350, JET400, JET401, JET450, JET460	24-250	24-500
Flymo		
D2	24-250	24-500
Green Machine		
1200, 1500, 1600, 1700, 1930, 1940, 1950, 2000, 2100, 2130, 2200, 2230, 2300, 2331, 2340, 2345, 2500, 2500-LP, 2510-LP, 2540, 2540LP, 2600, 2800, 2810, 2840, 2841, 2850, 3000, 3000B, 3000J, 3000-LP, 3000M, 3000SS, 3040M, 3050M, 3451, 4000, 4000B, 4000J, 4000M, 4000LP, 4500, 4500LPX, 4600LPX, BC250, BC400, D-17, D-18, G2A, G2C, G4C, GT20, GT21, GT22, GT25, GT31, GT31B, GT35B, GT40B, GT41, SRM3000, SRM3000LP, SRM3000SS, SRM3040M, SRM4000, SRM400LP, SRM4000M	24-250	24-500
Hitachi		
CG22EADSLP	24-250	
CG27EASPSL	24-250	24-500

OEM Model Numbers	4-1/4"	5"
Hoffco		
CRITTER, GT14A, GT14B, GT14H, GT21, GT22, GT160B, GT160T, GT160TL, GT210, GT211, GT211A, GT215T, GT225, GT225SPL, GT256SPL, GT320B, GT320HT, GT320T, GT380, GT250HT-A, GT250WT, GT320, GT320HGR320B, GTS-R, GTX, HOFFIE-22, LIL WIZ 600, LIL WIZ 1600, P22, WC-22, WC-215, WT14, WT160, WT160H, WT160HT, WT215, WT250C, WT250HT, WT1600,	24-250	
JP215, JP215GT, JP220F, JP225, JP260, JP260A, JP260C, JP270, JP300, JP300A, JP300B, JP300C, JP300F, JP320, JP390, JP390A, JP390C, JP390XL, JP420, JP420D, JP660	24-250	24-500
Homelite		
BCH20, BCH24, BCH32C, BCH32CDI, BCH33, BCH33B, BCH33DI, BCH33TO, BCH40, BCH48, FK514, HBC20, HBC24, HBC-30, HB-C30B, HBC32C, HBC33, HBC38, HBC40, HBC48, HK15, HK-18, HK-24 , HK-25, HK28, HK-30 , HK-33 , HK38, NBA524, PBC3600, PBC-3800, PBC-4000, PLT3400, PMB52, PMB522, RK521, ST20, ST40, ST60, ST80, ST80SXD20, ST100, ST120, ST155, ST160, ST175, ST175CG, ST180, ST200, ST210, ST285, ST360, ST385, ST385CG, ST400, ST485, SXD20, SX040, SXD40, TK518, TXD508	24-250	24-500
EASY REACH, D830CA, D830CB, D830SB, D830SD, ST145, ST155, ST175, ST175G, ST185, ST210, ST285, SX135, PLT3400, UT33600A, UT33650A, VERSA TOOL, Z825SD, Z830SB, Z830SBA	24-200	
Honda		
HHT25SLTAT, HHT35SLTAT, HHT35SUKAT, UMK422LNA, UMK422LTA, UMK431LNA, UMK431TA, UMK431UNBA	24-250	24-500
Husqvarna		
16R, 22R, 24R, 25RL, 24R , 122L, 123L, 223L, 224L, 225L, 225LD, 225R, 225RD, 225RJ, 324L, 324LDX, 324LX, 327LD, 327LDX, 327RJX, 525L, 525LS	24-250	
128C, 128DJX, 128L, 128LD, 128LDX, 129DJX, 129L, 129LDX, 227LD, 232L, 232R, 322L, 322R, 323L, 323R, 325LX, 325R, 326LS, 326LX, 326LS, 335LS, 336FR, 345FR, 525LST, 430LS	24-250	24-500
26LC, 26RLC, 32LC, 32RLC, MONDO, 32L, 32RL, 32R, 32RL, 216CN, 23LC, 26LC, 26RLC, 32LC, 32RLC, MONDO, 128C, 128CD, 129C, 129CD, 952711952	24-250	
Ideal		
S20, S25, SX230, SX260	24-250	24-500
Ikra		
BT1045	24-250	24-500
Iseki		
DYB201, DYB202, DYB251, DYB252, DYB254, DYB351, DYB354, DYB453		
IDC		
540, 540-1, 540-2, 540 SUPREME, 580, 580-1, 580-2, 580 SUPREME	24-250	24-500
John Deere		
21C, 80G, 82, 82G, 83G, 85, 100G, 110G, 120G, 200G, 210G, 220G, 250G	24-250	
21S, 24S, 25S, 30S, 38B, 38R, 60G, 90G, 220G, 250G, 300G, 350G, 450G, 240G, 250G, 260G, 300G, 305, 350G, 360G, 380G, 385, 450G, 460G, BC1600, S1400, T105S, XT105, XT105SB, XT120, XT140, XT140B, XT140SB, XT170, XT170B, XT250B	24-250	24-500
Jonsered		
BIG RED 400, BP40, BP40 COMBI, BP2040, BR400, BR420, BR450, BR460, BR480, BR500, GT21L, GT22L, GT24L, GR26 COMBI, GR26D, GR26L, GR32L, GR32L CAT, GR41, GR44, GR2026CL, GR2026D, GR2032, GR2032D, GR3032L, GR2036, J40D, LR200, LR220, LR220B, LR220L, LR260, LR260B, LR260L, LR300, LR320, LR400, LR420, LR450, LR460, RS38 , RS44, TIGER 40	24-250	24-500
GT25L, GT26, GT26L	24-250	
Kaaz		
BS400, BX440, BX540, G3CR, G4CR, J40FD, J400G, J400GX, J480, J4BD, JQG4K, JQT200, JLQT200, JQ40, JQ50, K10, K20, K40D, KLQ20, KQ20, KQP20B, KQ30, KQ30B, KQ40, KT10, KT15R, KT17R, KT18R, KT30R, LPQ20B, RQ20, RQ30, RQ30B, RQP20, T30, T50, T170, T240, T240, U10, V15, V20, V15, V18, V25, V35, V40, VP15, VP20, VP200, VPS301, VRP201, VRP301, VRP400, VRS200, VRS201, VS220, VS250, VRS300, VRS301, VRS400, VRX350, VRX351L, VRX360, VRX430, VRX440, VRX540, VS230, VS300, VS400, VSP250, VX221, VX251C, VX260, VX360, VX360S, VX440	24-250	24-500
Kawasaki		
KBL23A, KBL26A	24-250	24-500
Lawn Boy		
1460, 1480, 51606, 51607M, 51608, 51650, 51655, 51660, 51665, 61653, 51908, 51909, 51918, 51919, 1480/CC, 61653, 61953	24-250	
Makita		
EBC281, EBC310, EM4251, RB251, RBC221, RBC230, RBC251, RBC252, RBC255, RBC260, RBC261, RBC311, RBC321, RBC410, RBK410, RST250,	24-250	
Marunaka		
BC180DX, BC181DX, BC200DX, BC240DX, BC480DX, G3, G5, G8K, G13K, TM21DX, TM21F3L, TM24DX, TM24F3L, T240DX, T240F53L, T240F53	24-250	
Maruyama		
BC184, BC184C, BC200, BC200C, BC201, BC220DL, BC221DL, BC230, BC241, BC260, BC260C, BC260H, BC2300, BC2600, BCGX22, BCL2250, BCL2250C	24-250	
32, 35, BC310, BC320, BC320H, BC326, BC340DL, BC402, BC420H, BC430DWM, BC440DWM, BC500, BC500H, BC3200, BC4200H, BCGX31	24-250	24-500
BC184C, BC200C, BC201C, BC260C, BC260CB	24-250	

Gator® SpeedLoad™ Application Chart

OEM Model Numbers	4-1/4"	5"
McCulloch		
60SX, 65, 65SL, 80A, 80SX, 80SL, , 80SX, 85SL, 2320L, 2035, 2045, 138SJ, 138SL, EB I, EB I-SL, EB I-SX, EB II, EB II-SL, EB II-SX, EB III-SL, EB III-SX, EB280, EB282, EB285, EB285BC, EB287, EB287BC, MAC15RT, MAC60, MAC60A, MAC60S, MAC60SX, MAC65, MAC65SL, MAC70, MAC70A, MAC75, MAC80, MAC100A, MAC 85A, MAC 85S, MAC 85SX, MAC2815, MAC2816, MAC2817, MAC 2818, MAC 2825, MAC 2827, PROMAC I, PROMAC I-SX, PROMAC II, PROMAC II SUP, PROMAC IV HD, ROADRUNNER, ROADRUNNER II, ROADRUNNER III, ROADRUNNER SL, SEB I-SX SPECIAL, SEB II-S, SEB III-S, SILVER EAGLE 28, SILVER EAGLE 28C, SILVER EAGLE 32BC, TITAN2000, TITAN2010, TITAN2100, TITAN2200	24-200	
28S, 32HD, 32HDS, 85A, 85S, 85SL, 85SX, EB3SX, EB4, EB32BCS, EB35L, EB280, EB282, EB285BCS, EB297BCS, EB325BC, EB327BC, EB2815, EB2816, EB2817, EB2818, EB2845, EB3225, EB3225HD, EB3227, EB3227HD, EB III, EB IV, EB IV SL, MAC22, MAC23, MAC30A, MAC 32, MAC37, MAC38AV, MAC57, MAC85A, MAC90, MAC90A, MAC95, MAC95A, MAC99A, MAC99-SL, MAC100A, MAC100AHD, MAC100HD, MAC3225, MAC3227, MA3225HD, MAC3227HD, PROMACIII, PROMACIII SUP, PROMACIV SUP, PROMACIV HD, PROMAC2335J, PROMAC2635B, PROMAC2635J, PROMAC3335L, PROSCAPER I-S, PROSCAPER II, PROSCAPER IIHD, PROSCAPER III, PROSCAPER IV, PROSCAPER V, SILVER EAGLE 32 BCS, SILVER EAGLE 32 BC DLX, TD2400, TD3300, TD4000, TITAN2130, TITAN2310, TITAN2360, TITAN2400, TITAN2500, TITAN2500AV, TITAN2560, TITAN2560AV, TITAN2565, TITAN2300, TITAN2300AV, TITAN3000, TITAN3900, TITAN4335B	24-250	
Mitsubishi		
K20M-T12, MB6A, MB160A, MB180, MB200, MV130	24-250	
Murray		
41BDZ01C758, 41CDZ03C758	24-200	
41BDZ20C768, 41BDZ22C768	24-250	
Nikkari		
22, 24, 33, 37, FSK514, NBA524, PNB522, RK521, SDX20, SXD40, TDK518, TX(B)508	24-250	
Olympyk		
200, 220, 260, 300, 310, 400, 410, 433, 433BP, 440, 440BP, 727, 727D, 727C, 727S, 727T, 733, 733S, 733T, 740, 740S, 740T, 750, 750S, 750T B200, B220, B260L, B220L, B220S, B260, B300, B320, B400, B420, B450, B460, OL8740BAV, OL8742BAV, OL-8750PRO, OL8753BAV, OL88510BAV, OL8735LAV, OL8260BAV, OL8260DAV, OL8260LAV, OL8260TA, OL8350BAV, OL8350LAV, OL8450BP, OL8460BAV, OL8725BAV, OL8725LAV, OL8726TA, OL8735BAV, PRO-38,	24-250	
Paice Setter		
K20, KQ, KLQ, KQ30, JQ, J40D,	24-250	
Paramount		
PLT2651, PLT2857, PT140, PT140-2, PT145, PT160, PT162, PT162-01, PT1400, PT1400-00, SK140-02, SK145, SK160-02, SK165	24-250	
Pioneer/Partner		
F15, F16, S16, S24, SF24, B25SCC, S33, S41, S51, B180, B250, Spartan, T250, S33, S41, S51, B400, 200, 205, B250C, B250V, T250(EURO)	24-250	
Poulan Pro/Poulan		
770, PPC22, PPC25, PPC25E, PPC32; PRO111, PRO112, PRO113, PRO114, PRO115, PRO117, PRO559, PRO609, PRO900, PRO1350, PRO1500, PRO2400, PRO2500, PRO2600, PRO2610, PRO2620, PRO2615, PRO 2700, YARD PRO115, YARD PRO120A, YARD PRO130A, YARD PRO145, YARD PRO160, YARD PRO200	24-250	
Red Max		
BC220DL, BC221DL, BC300DL, BC2300DL, BK235FL, BC17, BC23, BC240DL, BC260DL, BC262DL, BC261DL, BC2600DL, BK 245FLK, BC 254A, BCD20, BCF01G2KC, BCX2600DS, BCZ 2500S/2500SU/2500SW/2500BC, BC2000DL, BC200BT2000, BT2001DL, FBC22, FBC26	24-250	
BC300DL, BK345FL, BK435FL, BK530DL, BC32, BC340DL, BC341DL, BC342DL, BC430DWM, BC440DWM, BK 346FL, BK 436FL, BC 340DWM, BC 340FW, BC 431DWM, BCF01G2KC, BC 3400DW/4400DW, BC430, BC440, BC441DWM, BC442, BC531, BC431FWM, BC531DWM	24-250	24-500
Remington		
RM2510, RM2520, RM2570, 41AD160G983, RUSTLER (straight and curved-shaft) WRANGLER (straight and curved-shaft)	24-200	
Robin		
NB02, NB02T, NB02-3A, NB02TM, NB03, NB03M, NB16, NB16F, NB16S, NB16T, NB20T, NBT20T, NB23, NB23S, NB23F, NB26, MB26AV, NB27, NB27AU, NB30K, NB31, NB31AU, MB31AV, NB211, NB211S, NB223, NB231, NB253, NB281, NB281AU, NBF171, NBF231, NBF251, NB351Z, NBF16F, NBF171, NBF251, NBR30K, NBR40, NBT211, NBT231, NBT415,	24-250	
Ryobi/Ryan/IDC		
120, 130, 260, 261, 262, 263, 264, 264-1, 264-2, 264-3, 265, 265-1, 265-P, 274, 274-2, 274-3, 275, 275-1, 275-P, 270, 280, 364, 364-1, 365, 500, 520, 520-1, 520-2, 700, 700R, 720R, 760R, 764R, 770R, 960R	24-200	
108KS, 284, 284-1, 284-2, 284-3, 285, 285-1, 285-P, 540, 540-1, 540-2, 580, 580-1, 580-2, 740R, 740R-1, 750R, 775R, 780R, 780R-1, 780RB, 780RE, 7890R, 865R, 885R, 990R, 840R, 3318, RD430, RD520, RD1605, RD180K, RD2414, RD3318, RD3330, RD3818, RD5224, RD5225, REK285BP, RSB2801, RSH1100,	24-250	
Sabo		
23-700, 26-1500, 26-1700	24-250	
Sabre		
B25, S25, S25C	24-250	
Sears		
PRO SERIES, 21851-2816, 636-79545, 636-7955, 636-79558, 636-796233, 7957, 7958, 7959, 7968, 7969, 74110, 74121, 74125, 79011, 79500, 79501, 79504, 79534, 79541, 79542, 79551, 79552, 79555, 79556, 79561, 79565, 79611, 79612, 79612, 79613, 79614, 79615, 79619, 79621, 79717, 79719, 79812, 79813, 79814, 79819, 79532, 79853, 79854, 79855, 79857, 796234M, 796242, 796243, 989658LS, 979551C	24-250	

Gator® SpeedLoad™ Application Chart

OEM Model Numbers	4-1/4"	5"
Sears		
74212, 74213, 79531, 79606, 79711, 79712, 79713, 79714, 79715, 79716, 79718, 79721, 79725, 79726, 79727, 79816, 79821, 79823, 742110, 742111, 797100,	24-250	
Servistar		
385SSR, 395SSR	24-250	
Shindaiwa		
C-20, C-23, C-25, C-230, C-242, C-250, C-254, T-20, T-20A, T-23E, T-25, T-195, T-220, T-222, T-230, T-230S, T-230XR, T-235, T-254, T-242, T-242X, T-2510X, T-250, T-260, T-261, T-261B, T-261XB, T-261XR, YARDWARE 220	24-250	
B-35, B-40, B-45, B-450, BP-35, BP-45, C-27, C-35, C-282, C-344, T-27, T35, T-270, T-272, T-272X, T-282, T-282X, T-300, T-344X, T-3410, T-3410X, T-350,	24-250	24-500
F-18, F-20, F-21, F-22, F-230, F195	24-250	
Shingu		
650, 200, 250, 350, S20, G1823E, G1823DE, G2523E, G2523DE, P750, P850, PK2325E, PK2326DE, PG3330DD, PK4035DD, PK4036DD, PK4845DD, PK4846DD, S22PNC, S23PNC	24-250	
Shingushoko		
200, 250, 350, 600, 650, 700, K301, P750, P850	24-250	
Snapper		
212, 212CST, 213, 213CST, 214, 214 DCST, P212CST, P212LST, S28CD	24-250	
210SS, 211SS, 211SST, 212CST, 214DCST, 215ORI, 215SST, 240SS, 240SST, 245SST, 245ORT, 310, 311, 311S, 410, 410SST 411SST, 414 SST, 415ORT, 2101SST, PL212LST, SSTBC, SST2111, SST2401, SST7111	24-250	
Solo		
014, 100, 119, 115, 118, 123, 125, 154, 400, 130S, S100, S400, FS136, FS135, MULTIMOT,	24-250	
Stihl		
FS44, FS44B, FS44J, FSS44R, FS50E, FS50F, FS51, FS51AVE, FS52, FS52AVE, FS55, FS55R, FS55RC-E, FS56, FS56AVRE, FS56C-E, FS56RC-E, FS60, FS61, FS61AE, FS61E, FS62, FS62AVE, FS62AVRE, FS65, FS65AVE, FS65AVRE, FS66, FS66AVE, FS66AVRE, FS70R, FS74, FS74AVE, FS74AVRE, FS76, FS76AVE, FS76AVRE, FS80E, FS80RE, FS81, FS81AVE, FS81AVRE, FS83, FS83R, FS83RT, FS85R, FS85R, FS85RT, FS86, FS86AVE, FS86AVRE, FS88, FS90, FS90AVE, FS90R, FS91, FS94R, FS96, FS100, FS106, FS106AVE, FS108, FS110, FS110R, FS120, FS120R, FS130, FS130R, FS200, FS200R, FS240, FS240R, FS250, FS250R, FS310, FS350, FS360C-E, FS400, FS450K, FS460C-EM, FS550, FS550K, FS560C-EM	24-250	24-500
FS38, FS40 (2001 & newer), FS40C-E, FS45, FS46, FS50C-E, FSE60	24-200	
TAS		
HD180, Parlander, SUM301, SUM7000, TB16, TB160, TBC23, TBC23F, TBC30, TBC202, TBC205, TBC215, TBC232, TBC262, TBC265, TBC30, TBC301, TBC322, TBC355, TBC373, TBC422, TBC501, QUM2, SUM3	24-250	24-500
TMC		
1800, 2400, 3300, 3350	24-250	24-500
TML		
2856	24-250	24-500
Tanaka		
218, 220E, 233, 2000, 265SDH, SUM250, SUM500/351, SUM421, SUM301, SUM7000, SUM400, TBC-162, TBC-205, TBC-215, TBC218, TBC-220, TBC-220SS, TBC-232, TBC233, TBC-240, TBC-250, TBC-255PF, TBC-262, TBC-265, TBC-2100, TBC-2110, TBC-2211, TBC-2510, TST-218, TST-501, TBC265SDH, TBC2000, TBC2200, TBC200ON, TBC2110, TBC-160, TBC-202, TBC-210, TC-1600, TST218, TBC160, TBC162, TBC202, TBC205, TBC210, TC1600, TBC215, TCG-24EASPSL, TCG-24EBSP	24-250	
301, 321, 300SDH, 355SDH, 422SDH, 500SDH, TBC-270PF, TCB-280PF, TBC-300, TBC301, TBC321 TBC-322, TBC-325, TCB-340PF, TBC-355, TBC-373, TBC-400, TBC-420PF, TBC-422, TBC-422C, TBC-425, TBC-500, TBC-501, TBC-2800, TBC-3010, TBC-4500, TBC-4501, TBC4000, TGC-27EASPL, TST-501	24-250	24-500
TBC2100, TBC200, TCG22EABSLP	24-250	
Tondu		
260, 350, S100, S250, PRO850, PRO255, PRO851	24-250	
Toro		
1000, 2000, 30900, 30901, 30920, 51628, 51641, 51645, 51650, 51660, 51918, CL700, CL2100, CL30900, CL30901, CL30920, TC300, TC350, TC400, TC600, TC650, TC700, TC800, TC1000, TC2000, TC2100, TC3000, TC3100, TC3500, TC4000, TC5000	24-250	
51957, 51958, 51978, 51998TC1000, TC2000	24-250	
Troy-Bilt		
TB42BC, TB590EC, TB685EC, TB2040XP, TB2044XP, TB6042XP, TB6044XP	24-250	
TB21EC, TB22EC, TB32EC, TB80EC, TB525EC, TB575EC, TB625EC, TB635EC	24-200	
Weedeater		
AYP140, 22(EUROPE), 599, 609, 1000, GTI19, GTI19T, XR90, XR95, XR100, XR105, XR125, XR200, YP130, YP140, YP160, YP200, PRO37, PRO100, PRO105, PRO150, PRO195, PRO200	24-250	24-500
115, 117, GTI15, GTI15-T, GTI16, GTI17C, GTI17T, GTI18, GTI18KT, GTI18T, GTI19, GTI52, GTI SUPER 16, PRO111, PRO112, PRO114, PRO115, PRO117 , PRO175, PRO-LITE, PRO-LITE PLUS, ULTRA TRIM, WEEDY 2215, XR20, XR20T, XR30, XR50, XR50A, XR50S, XR70, XR75, XR80, XR80A, XR85, XR125, XT20, XT35, XT50T, XT80, XT85, XT100, XT125, XT125B, XT165, XT175, XT185, XT195, XT500, XT507, XT559, XT587, XT599, XT600, XT607, XT608, XT609, XT1400, XT1400T, XT1500, XT1600, XT1600T, XT1700, XT1700A, XT1740, XT3500, YP110, YP115, YP116, YP120, YP120A, YP130, YP130A, YP145,	24-250	

Gator® SpeedLoad™ Application Chart

OEM Model Numbers	4-1/4"	5"
Westmac		
16, 19S, 23, 31, 33S, 35, 40, 50, 68	24-250	
Windmill		
AM SERIES, B40, C35, X3335G,	24-250	
Vandermolen		
L1840F, L1840G, L1845E, L1845G, L2035G, L2415E, L2415G, L3335G, X184SE, X185SE, X1845G, X2415E, X2415G, X3335E, X3335G	24-250	
Xenoa		
FBC33	24-250	
Yamaha		
YBC20D, YBC30D, YBC40D, YBC50D	24-250	
Yazoo		
TBC31, YBC16, YBC23, YBC31	24-250	

BioTrim™ Trimmer Line

- Oxo-biodegradable material offers quick decomposition compared to standard Oregon® trimmer lines
- Performs similar to Oregon Gatorline® products with comparable applications
- Recyclable material used for packaging components

OREGON	Package Type	Footage	Product Code
.080" Gauge			
559046	50' Donut	50' (15 m)	
559050	1 lb. Donut	413' (126 m)	
.095" Gauge			
559047	50' Donut	50' (15 m)	
559051	1 lb. Donut	285' (87 m)	

Oxo -Biodegradability* is a three-fold process:

1. Photo-oxidation: The line is fragmented by UV light from the sun over a period of 3 years.
2. Thermo-oxidation: Heat continues the fragmentation on the soil.
3. Bio-assimilation: Finally, micro-organisms in the earth consume the remaining elements. The whole process takes between 5 and 10 years (depending on climatic conditions), after which no trace of the line remains. The line will oxo-biodegrade only when in contact with the soil. It remains completely intact and in perfect condition when stored.

Degradability Scale:

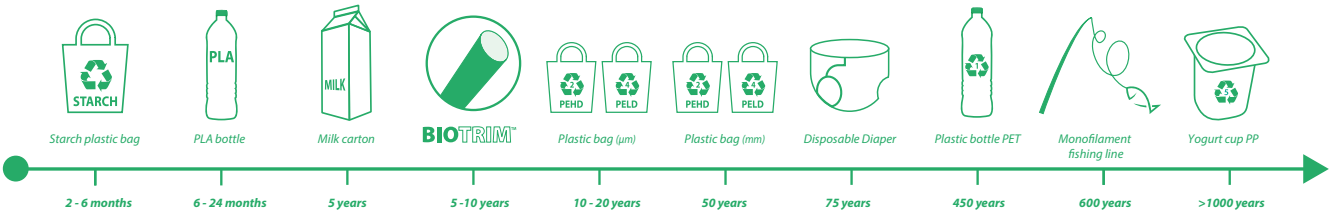

* OXO-Biodegradability certified by "Le Centre National d'Evaluation de Photo protection" C.N.E.P. – University Blaise Pascal, Clermont-Ferrand, FRANCE. Test protocol C.N.E.P. – SEESIB compliant with BS 8472:2011

T

Platinum Gatorline™

Platinum Gatorline solves many of the problems that aggravate users of traditional trimmer line. An armored exterior – more resistant to breakage than standard line – shields a highly flexible co-polymer core, providing outstanding durability. Platinum Gatorline is also engineered to resist welding up to 498° F (259° C) – much higher than standard line.

Features
- Consistent line diameter
- Armored exterior
- Flexible core
- SuperTwist®

Benefits
- Compatible with most trimmer head systems
- High resistance to abrasion, breakage and welding
- Resistant to cracking and breaking
- Less resistance, engine drag, vibration and noise compared with traditional, round nylon lines

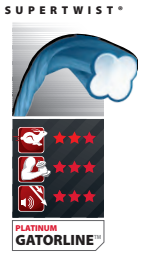

OREGON	Package Type	Footage	Product Code
.080" Gauge			
20-117	1/2 lb. Donut	207'	
20-118	1 lb. Donut	414'	
20-119	3 lb. Spool	1244'	
.095" Gauge			
20-104	1/2 lb. Donut	145'	
20-100	1 lb. Donut	289'	
20-109	1 lb. Spool	289'	
20-102	3 lb. Spool	866'	
20-113	5 lb. Spool	1440'	
.105" Gauge			
20-106	1/2 lb. Donut	118'	
20-101	1 lb. Donut	236'	
20-110	1 lb. Spool	236'	
20-103	3 lb. Spool	709'	
20-114	5 lb. Spool	1181'	

OREGON	Package Type	Footage	Product Code
.118" Gauge			
20-123	1 lb. Donut	185'	
20-125	3 lb. Spool	554'	
20-124	5 lb. Spool	923'	
.130" Gauge			
20-107	1 lb. Donut	151'	
20-111	1 lb. Spool	151'	
20-112	3 lb. Spool	456'	
20-115	5 lb. Spool	761'	
.155" Gauge			
20-108	1 lb. Donut	100'	
20-116	5 lb. Spool	500'	

SuperTwist Magnum Gatorline™

SuperTwist Magnum Gatorline offers all of the features of Magnum Gatorline but with a twist! SuperTwist incorporates the high strength inner core and weld resistant outer layer with new twisted shape that not only reduces noise but improves cutting efficiency.

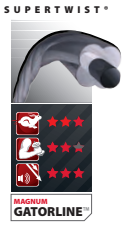

OREGON	Package Type	Footage	Product Code
.095" Gauge			
69-200	50' Donut	50'	
20-020	1 lb. Donut	280'	
20-026	3 lb. Spool	867'	
20-023	5 lb. Spool	1430'	
.105" Gauge			
69-046	50' Donut	50'	
20-034	1 lb. Donut	289'	
20-035	3 lb. Spool	709'	
20-036	5 lb. Spool	1181'	
.118" Gauge			
69-201	50' Donut	50'	
20-021	1 lb. Donut	180'	
20-027	3 lb. Spool	555'	
20-024	5 lb. Spool	915'	
.130" Gauge			
69-202	32' Donut	32'	
20-022	1 lb. Donut	150'	
20-028	3 lb. Spool	459'	
20-025	5 lb. Spool	750'	

Trimmer Line & Heads

Magnum Gatorline™

Heavy-duty, professional, dual polymer trimmer line from Oregon®

- Outer layer prevents welding
- User friendly donut - fewer tangles
- High-strength inner core resists breaking
- Long life, excellent strength

Square

OREGON	Package Type	Footage	Product Code
.080" Gauge			
22-980	1/2 lb. Donut	163'	
22-480	1 lb. Donut	327'	
22-880	3 lb. Spool	980'	
22-080	5 lb. Spool	1633'	
.095" Gauge			
69-190	50' Donut	50'	
22-995	1/2 lb. Donut	113'	
22-495	1 lb. Donut	227'	
22-895	3 lb. Spool	681'	
22-095	5 lb. Spool	1134'	
.105" Gauge			
69-191	50' Donut	50'	
22-905	1/2 lb. Donut	90'	
22-405	1 lb. Donut	179'	
22-805	3 lb. Spool	564'	
22-005	5 lb. Spool	896'	
.130" Gauge			
69-194	50' Donut	50'	
22-930	1/2 lb. Donut	60'	
22-430	1 lb. Donut	120'	
22-830	3 lb. Spool	360'	
22-030	5 lb. Spool	600'	
.155" Gauge			
22-955	1/2 lb. Donut	42'	
22-455	1 lb. Donut	84'	
22-855	3 lb. Spool	251'	
22-055	5 lb. Spool	419'	
.170" Gauge			
22-970	1/2 lb. Donut	36'	
22-470	1 lb. Donut	72'	
22-870	3 lb. Spool	213'	
22-070	5 lb. Spool	354'	

Round

OREGON	Package Type	Footage	Product Code
.080" Gauge			
22-280	1/2 lb. Donut	208'	
22-380	1 lb. Donut	416'	
22-180	3 lb. Spool	1248'	
22-580	5 lb. Spool	2081'	
.095" Gauge			
69-195	50' Donut	50'	
22-295	1/2 lb. Donut	144'	
22-395	1 lb. Donut	289'	
22-195	3 lb. Spool	867'	
22-595	5 lb. Spool	1445'	
.105" Gauge			
69-196	50' Donut	50'	
22-205	1/2 lb. Donut	114'	
22-305	1 lb. Donut	228'	
22-105	3 lb. Spool	685'	
22-505	5 lb. Spool	1142'	
.130" Gauge			
69-197	50' Donut	50'	
22-230	1/2 lb. Donut	76'	
22-330	1 lb. Donut	153'	
22-130	3 lb. Spool	459'	
22-530	5 lb. Spool	764'	
.155" Gauge			
22-255	1/2 lb. Donut	53'	
22-355	1 lb. Donut	107'	
22-155	3 lb. Spool	320'	
22-555	5 lb. Spool	533'	
.170" Gauge			
22-270	1/2 lb. Donut	46'	
22-370	1 lb. Donut	92'	
22-170	3 lb. Spool	269'	
22-570	5 lb. Spool	449'	

T

Gatorline™

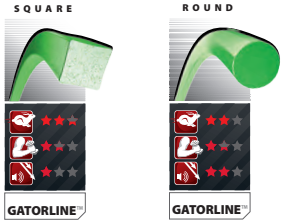

- Fits all standard trimmer heads
- Long-lasting premium co-polymer
- Green color
- User-friendly donut limits tangles

Square

OREGON	Package Type	Footage	Product Code
.065" Gauge			
69-170	50' Donut	50'	
.080" Gauge			
69-171	50' Donut	50'	
21-980	1/2 lb. Donut	163'	
21-480	1 lb. Donut	327'	
21-880	3 lb. Spool	980'	
21-080	5 lb. Spool	1633'	
.095" Gauge			
69-172	50' Donut	50'	
21-995	1/2 lb. Donut	113'	
21-495	1 lb. Donut	227'	
21-895	3 lb. Spool	681'	
21-095	5 lb. Spool	1134'	
.105" Gauge			
21-905	1/2 lb. Donut	90'	
21-405	1 lb. Donut	179'	
21-805	3 lb. Spool	564'	
21-005	5 lb. Spool	896'	
.118" Gauge			
21-234	1 lb. Donut	145'	
21-235	3 lb. Spool	435'	
21-236	5 lb. Spool	725'	
.130" Gauge			
21-930	1/2 lb. Donut	60'	
21-430	1 lb. Donut	120'	
21-830	3 lb. Spool	360'	
21-030	5 lb. Spool	600'	
.155" Gauge			
21-955	1/2 lb. Donut	42'	
21-455	1 lb. Donut	84'	
21-855	3 lb. Spool	251'	
21-055	5 lb. Spool	419'	
.170" Gauge			
21-470	1 lb. Donut	72'	

Round

OREGON	Package Type	Footage	Product Code
.065" Gauge			
69-173	50' Donut	50'	
21-265	1/2 lb. Donut	306'	
21-365	1 lb. Donut	611'	
.080" Gauge			
69-174	50' Donut	50'	
21-280	1/2 lb. Donut	208'	
21-380	1 lb. Donut	416'	
21-180	3 lb. Spool	1248'	
21-580	5 lb. Spool	2081'	
.095" Gauge			
69-175	50' Donut	50'	
21-295	1/2 lb. Donut	144'	
21-395	1 lb. Donut	289'	
21-195	3 lb. Spool	867'	
21-595	5 lb. Spool	1445'	
.118" Gauge			
21-231	1 lb. Donut	185'	
21-232	3 lb. Spool	554'	
21-233	5 lb. Spool	923'	
.105" Gauge			
69-176	50' Donut	50'	
21-205	1/2 lb. Donut	114'	
21-305	1 lb. Donut	228'	
21-105	3 lb. Spool	685'	
21-505	5 lb. Spool	1142'	
.130" Gauge			
69-177	50' Donut	50'	
21-230	1/2 lb. Donut	76'	
21-330	1 lb. Donut	153'	
21-131	3 lb. Spool	459'	
21-530	5 lb. Spool	764'	
.155" Gauge			
21-255	1/2 lb. Donut	53'	
21-355	1 lb. Donut	107'	
21-155	3 lb. Spool	320'	
21-555	5 lb. Spool	533'	
.170" Gauge			
21-370	1 lb. Donut	92'	
21-170	3 lb. Spool	272'	

Important Trimmer Line Information

Any monofilament trimmer line can lose moisture over time or become brittle, especially if subjected to heat and sunlight. To reduce brittleness, Oregon® strongly recommends that line be submerged in water for 24 hours.

T

Trimmer Line & Heads

Oregon® Trimmer Line, Green

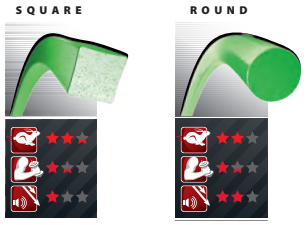

- Fits all standard trimmer heads
- Long-lasting premium co-polymer
- Green color
- User-friendly donut limits tangles

OREGON	Package Type	Footage	Product Code
Square .095" Gauge			
69-001 – NEW	15M Clamshell	50'	
69-004 – NEW	1/2 lb. Clamshell	120'	
69-414	1 lb. Donut	246'	
69-415	3 lb. Spool	738'	
69-416	5 lb. Spool	1230'	
Square .105" Gauge			
69-005 – NEW	1/4 lb. Clamshell	50'	
69-008 – NEW	1/2 lb. Clamshell	90'	
69-472	1 lb. Donut	193'	
69-473	3 lb. Spool	584'	
69-474	5 lb. Spool	971'	

OREGON	Package Type	Footage	Product Code
Round .095" Gauge			
69-012 – NEW	15M Clamshell	50'	
69-010 – NEW	1/2 lb. Clamshell	140'	
69-364	1 lb. Donut	288'	
69-365	3 lb. Spool	866'	
69-366	5 lb. Spool	1446'	
Round .105" Gauge			
69-013 – NEW	15M Clamshell	50'	
69-014 – NEW	1/2 lb. Clamshell	120'	
69-382	1 lb. Donut	229'	
69-383	3 lb. Spool	685'	
69-384	5 lb. Spool	1142'	

Oregon® Trimmer Line, Red

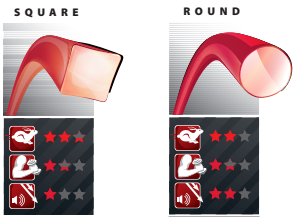

- Fits all standard trimmer heads
- Long-lasting premium co-polymer
- Red color
- User-friendly donut limits tangles

OREGON	Package Type	Footage	Product Code
Square .095" Gauge			
69-592 – NEW	15M Clamshell	50'	
69-593 – NEW	1/2 lb. Clamshell	120'	
69-604	1 lb. Donut	246'	
69-605	3 lb. Spool	738'	
69-606	5 lb. Spool	1230'	
Square .105" Gauge			
69-594 – NEW	15M Clamshell	50'	
69-595 – NEW	1/2 lb. Clamshell	90'	
69-607	1 lb. Donut	193'	
69-608	3 lb. Spool	584'	
69-609	5 lb. Spool	971'	

OREGON	Package Type	Footage	Product Code
Round .095" Gauge			
69-596 – NEW	15M Clamshell	50'	
69-597 – NEW	1/2 lb. Clamshell	140'	
69-610	1 lb. Donut	288'	
69-611	3 lb. Spool	866'	
69-600	5 lb. Spool	1446'	
Round .105" Gauge			
69-598 – NEW	15M Clamshell	50'	
69-599 – NEW	1/2 lb. Clamshell	120'	
69-601	1 lb. Donut	229'	
69-602	3 lb. Spool	685'	
69-603	5 lb. Spool	1142'	

T

Gatorline™ Pre-cut Lengths

- Commercial grade line with square edges
- Long-lasting premium co-polymer material
- Green color

OREGON	Length	Package Type	Fit-up	Quantity	Product Code
Square – .095" Gauge					
19-031	8"	Cut lengths in a bag	Kwik Loader® trimmer heads	3 lbs.	
19-041	8"	Cut lengths in a tube	Kwik Loader trimmer heads	50 pcs.	
19-006	16-1/4"	Cut lengths in a tube	Fixed line trimmer heads	90 pcs.	
Square – .105" Gauge					
19-032	8"	Cut lengths in a bag	Kwik Loader trimmer heads	3 lbs.	
19-042	8"	Cut lengths in a tube	Kwik Loader trimmer heads	50 pcs.	
Square – .130" Gauge					
19-033	8"	Cut lengths in a bag	Kwik Loader trimmer heads	3 lbs.	
19-043	8"	Cut lengths in a tube	Kwik Loader trimmer heads	40 pcs.	
19-004	16-1/4"	Cut lengths in a tube	Fixed line trimmer heads	36 pcs.	
19-002	18"	Cut lengths in a tube	Troy-Bilt high wheel trimmers	36 pcs.	
19-001	21"	Cut lengths in a tube	DR & other high wheel trimmers	36 pcs.	
Square – .155" Gauge					
19-034	8"	Cut lengths in a bag	Kwik Loader trimmer heads	3 lbs.	
19-044	8"	Cut lengths in a tube	Kwik Loader trimmer heads	25 pcs.	
19-007	16-1/4"	Cut lengths in a tube	Fixed line trimmer heads	24 pcs.	
19-005	18"	Cut lengths in a tube	Troy-Bilt high wheel trimmers	24 pcs.	
19-003	21"	Cut lengths in a tube	DR & other high wheel trimmers	24 pcs.	

Red Gatorline™

- Fits all standard trimmer heads
- Long-lasting premium co-polymer
- User-friendly donut limits tangles

Round

OREGON	Package Type	Footage	Product Code
.080" Gauge			
23-380	1 lb. Donut	416'	
23-780	1 lb. Spool	416'	
23-180	3 lb. Spool	1248'	
23-580	5 lb. Spool	2081'	
.095" Gauge			
23-395	1 lb. Donut	289'	
23-795	1 lb. Spool	289'	
23-195	3 lb. Spool	867'	
23-595	5 lb. Spool	1445'	
.105" Gauge			
23-705	1 lb. Spool		
.130" Gauge			
23-331	1 lb. Donut	153'	
23-131	3 lb. Spool	459'	
23-530	5 lb. Spool	764'	

Trimmer Line & Heads

FlexiBlade™ Trimmer Line

FlexiBlade is a revolution in trimmer technology, a patented cutting system with the power to sever weed stalks up to 3/4" in diameter with ease. The extreme cutting force of FlexiBlade for cutting weeds and heavy grass comes from its serrated edges. The serrations act like the teeth of a saw, bringing multiple cutting surfaces into contact with the vegetation being cut. FlexiBlade is made from a proven high-strength reinforced composite material for long-wearing durability.

- Leaves a cleaner cut in grass
- Cuts through dense weeds and berry vines
- Cuts fast, even in heavy cutting conditions
- More cutting power than trimmer line
- Quieter than trimmer line
- Safer than steel weed blades

NOTE: FlexiBlade is designed to cut weeds, vines and grass. Avoid contact with concrete, rocks and wood. The sharp teeth can damage trees, walls, and fences. The .099" and .105" diameters can be used in most manual-feed trimmer heads. FlexiBlade is not recommended for most "bump feed" trimmers.

Donuts & Spools

Gauge	OREGON	Package Type	Footage	Product Code
.099"	21-600	Donut	175'	
	21-605	Large Spool	920'	
.105"	21-601	Donut	156'	
	21-606	Large Spool	819'	
.118"	21-602	Donut	121'	
	21-607	Large Spool	639'	
.138"	21-603	Donut	89'	
	21-608	Large Spool	470'	
.158"	21-604	Donut	68'	
	21-609	Large Spool	360'	

Pre-Cut Trimmer Line

Gauge	OREGON	Pieces Per Tube	Length	Product Code
.099"	19-025	50	8"	
.105"	19-026	45	8"	
	19-016	45	10"	
.118"	19-027	35	8"	
	19-017	35	10"	
.138"	19-028	25	8"	
	19-018	25	10"	
	19-019	20	10"	

Use 8" pre-cut lengths with Jet-Fit™ Express heads
Use 10" pre-cut lengths with Jet-Fit heads

Can't find what you're looking for?
Try us online to search the latest products available.

OregonProducts.com

Important Trimmer Line Information
Any monofilament trimmer line can lose moisture over time or become brittle, especially if subjected to heat and sunlight. To reduce brittleness, Oregon® strongly recommends that line be submerged in water for 24 hours.

OREGON	Replaces	Description	Product Code

Trimmer Line Cutter

21-000	Universal	**Trimmer Line Cutter** Safe and simple to use. Simply bend the line at the point you want to cut and push into the tool.	

Lightning Load™ Bump & Feed Head Trimmer Heads

Lightning Load bump and feed trimmer heads for straight-shaft trimmers:

- Quickly replace trimmer line through eyelets without opening head
- Spool divider prevents line tangle
- Available in either 4-1/4" or 5" diameter sizes

OREGON	Description	Product Code
55-989	**Lightning Load** Bump feed – small **Adaptors Included:** 7 mm x 1.0 LHM 8 mm x 1.25 LHM 10 mm x 1.25 LHF 10 mm x 1.25 LHF counter bore 10 mm x 1.00 LHF counter bore	
55-990	**Lightning Load** Bump feed – large **Adaptors Included:** 7 mm x 1.0 LHM 8 mm x 1.25 LHM 10 mm x 1.25 LHF 10 mm x 1.25 LHF counter bore 10 mm x 1.00 LHF counter bore	

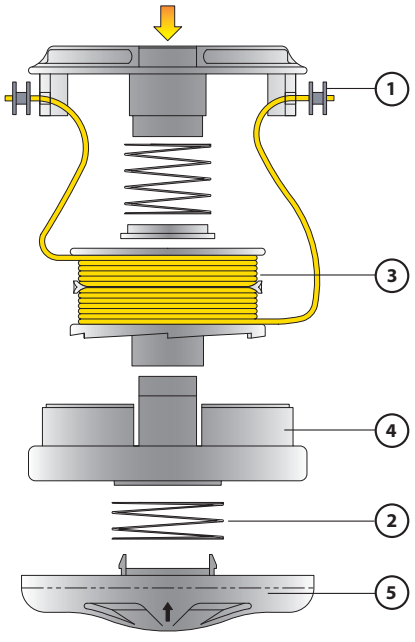

№	OREGON	Description	Product Code
55-989 Replacement Parts			
1	55-516	Eyelets	
2	55-517	Spring	
3	55-518	Spool	
4	55-519	Carrier	
5	55-520	Bump Knob	
55-990 Replacement Parts			
1	55-516	Eyelets	
2	55-521	Spring	
3	55-522	Spool	
4	55-523	Carrier	
5	55-524	Bump Knob	

T

Trimmer Line & Heads

Similar to Speed-Feed® Heads, 2-Line

Easy line loading takes 30 seconds or less. No disassembly required. Simply slide line through head until half of amount to be added is on each side of the head, grasp the easy grip collar and wind line in. Rugged semi-matic head is designed for medium to heavy-duty applications. Inner wall reduces debris inside the head and large durable eyelets increase line life. Line tensioning system with split spool reduces vibration. Part numbers 55-294 & 55-265 mount on most straight-shaft trimmers using the included adaptors similar to Speed-Feed.

OREGON	Description	Product Code
55-294	**Trimmer Head** 3-3/4" LH spool **Adaptors Included:** 7 mm x 1.0 LH 8 mm x 1.25 LH 10 mm x 125 LH	
55-265	**Trimmer Head** 4-1/2" LH spool **Adaptors Included:** 7 mm x 1.0 LH 8 mm x 1.25 LH 10 mm x 125 LH	

Replacement Parts

№	OREGON	Description	Fit-Up	Product Code
1	55-337	Arbor Stud M7 x 1 (LH)	55-294 55-265	
2	55-338	Arbor Stud M8 x 1.25 (LH)	55-294 55-265	
	55-352	Arbor Stud M8 x 1.25 (RH)	55-264	
3	55-345	Spacer	55-294 55-264 55-265	
4	55-298	Knob	55-294 55-264	
5	55-296	Eyelet Carrier	55-294 55-264	
	55-347	Eyelet Carrier	55-265	
6	55-336	Eyelet	55-294 55-264 55-265	
7	55-295	Core	55-294 55-264 55-265	
8	55-288	Arbor Bushing M10 x 1 (LH)	55-294 55-265	
9	55-287	Arbor Bushing M10 x 1.25 (LH)	55-294 55-265	
10	55-289	Arbor Bushing M8 x 1.25 (LH)	55-294 55-265	
11	55-299	Spool (LH)	55-294	
	55-348	Spool (LH)	55-265	
12	55-339	Spring Cap	55-294 55-264 55-265	
13	55-344	Spring	55-294 55-264 55-265	
14	55-297	Cover	55-294 55-264	
	55-349	Cover	55-265	

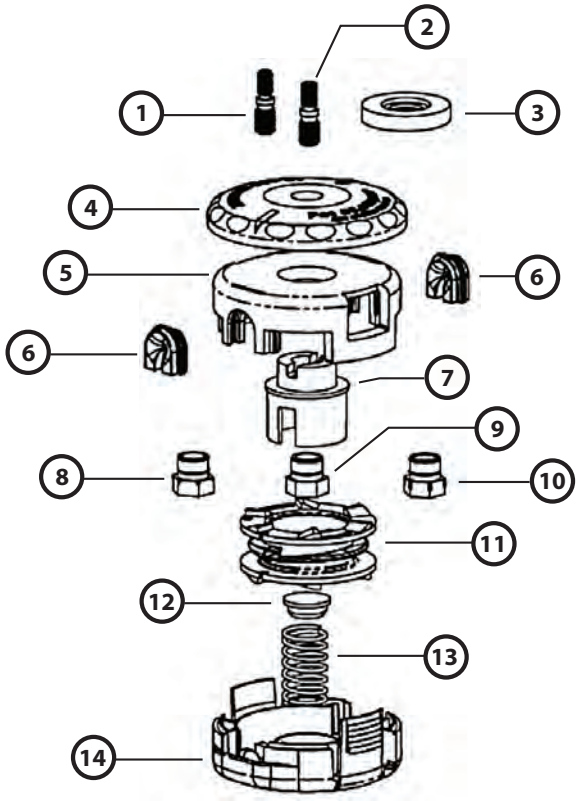

Similar to Speed-Feed® Head, Application Chart

Left Hand Thread Units: P/N 55-294 (33/4" LH Trimmer Head)
P/N 55-265 (41/2" LH Trimmer Head)

LH1	LH2	LH3	LH4	LH5	LH6
7 mm x 1.0LHM	8 mm x 1.25LHM	10 mm x 1.25LHM	8 mm x 1.25LHF	10 mm x 1.0LHF	10 mm x 1.25LHF

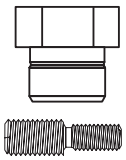
(gold)

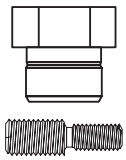
(silver)

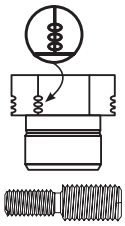
(silver)

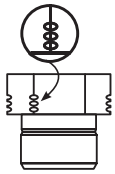

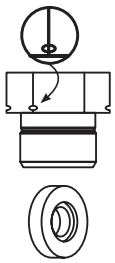

Echo SRM – P/N 55-265 450LH +

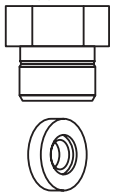

Echo

LH6*	SRM SERIES: 140, 200, 202, 210, 220, 230, 250, 251, 260, 261, 265, 280, 300, 302, 303, 311, 330, 340, 343, 350, 400, 402, 500, 501, 1500, 1501, 2010, 2090, 2100, 2110, 2200, 2201, 2300, 2301, 2400, 2410, 2450, 2500, 2501, 2502, 2510, 2530, 2601, 3000, 3001, 3010, 3100, 3110, 3400, 3410, 3500, 3550, 3800, & 4600

Homelite

LH2*	HK-24 (to 1/1/'86), HK30 (after 1/1/86), HK33 (to 1/1/86)
LH4*	BCH20, BCH24, BCH32, BCH33, BCH40, BCH48, HBC-30, HBC-38, HK-15, HK 18 (after 1/1/86), HK-28, HK24 (after 1/1/86), HK-25, HK-30 (up to 1/86), HK-33 (after 1/1/86), HK-38, PBC-3600, PBC-3800, PBC-4000, PBC-4000, PLT3400, ST-285, ST155, ST175, ST385, ST485
LH3*	FK514, NBA524, PMB522, SX040, SXD40, TXD508
LH6*	HBC40, PBC3800, PBC4000, PMB52, HBC48
LH2*	ST80/100/120/160/180/200/210/360/ 385 (EURO)
LH4*	ST20/40/60/100/200/400, SXD20, RK521, TK518

Honda

LH6*	UMK422LNA/LTA, UMK431LNA/TA/UNBA, HHT25SLTAT, HHT-35SLTAT, HHT35SUKAT

Husqvarna

LH2*	(Up to 86) 16R, 22R, 24R, 25RL
LH1*	24R (up to ser #603702)
LH6*	122L, 125L, 225L, 225LD, 225R, 225RD, 225RJ, 227LD, 232L, 232R, 322L, 322R, 324LX, 325LX/RX, 326LS/LX, 335LS

Jonsered

LH2*	BP40, BP40COMBI, BP2040, BR400, BR420, BR450, BR460, BR480, BR500, Tiger 40, GT21L, GT22L, GT24L, GR26COMBI, GR26D, GR26L, GR32L, GR2026CL, GR2026D, LR200, LR220, LR260, LR320, LR400, LR420, LR450, LR460
LH5*	RS38ANCIEN, RS38 older
LH6*	RS44, GR44, GR41, J40D, KQ20/30 (EURO)

Maruyama

LH2*	BC184, BC184C, BC200, BC201, BC230, BC241, BC260, BC260H, BC310, BC320, BC320H, BC326, BC340DL, BC402, BC420H, BC500, BC500H, BC2300, BC2321, BC2600, BC3021, BC3200, BC4200H, BCL2550, BCGX22, BCGX31, BCL2250
LH1*	BC220DL, BC221DL
LH4*	BT17, BT220, BC200C, BC260C
LH6*	BC184C, BC200C, BC260C
LH3*	BC430DWM, BC440DWM, 32, 35, BC500

McCulloch

LH3*	MAC57, MAC90, MAC95, MAC100A
LH6*	PROMAC SERIES: III, IIISUP, IVSUP, PROSCAPER; SERIES: 28S, 32H, 32HDS, III IV, V, IS, II, IIHD, SEBIC, SUPMAC100A; PS1, PS2, PS3, PS4, PS5, SEBIV; EB SERIES: III, IVSL, 3, 4, 3SX, 32BCS, 35L, 280, 282, 285BCS, 297BCS, 325BC, 327BC, 2815, 2816 2817, 2818,
LH2*	MAC 22/23/30A, SUPERMAC 30AV, MS33, DELTA, 38AV, MS40, BP30AV, TD2400/3300/4000
LH3*	MAC 57, MAC 90, MAC 95, MAC 100A, MAC 32, MAC 37

Red Max

LH1*	BC220DL, BC221DL, BC300DL, BC2300DL, BK235FL, BK345FL, BK435FL, BK530DL, BC17, BC23, BC32, BC240DL
LH2*	BC260DL, BC261DL, BC262DL, BC340DL, BC341DL, BC342DL, BC2600DL, BC430DWM, BC440DWM, BK346FL, BK245FLK, BK436FL, BC245A, BC260DM/DMU, BC340DWM/ FW, BC431DWM, BCD20, BCF01, BC2601S, BC3400DW, BC4400DW, BCX2600DS, BCZ2500S/SU/SW
LH3*	BC430DWM, BC440DWM, BC441DWM, BC442DWM, BC531DWM, BC532DWM, FBC22, FBC26
LH6*	BC200, BC2000DL, BT2000, BT2001DL

Shindaiwa

LH1*	T195, T220, T222, T230, T230s, T242, T242X, T2510, T2510X
LH2*	T260, T261, T261B/XR/XB, T272, T272X, T282, T282X, T300, T3410, T3410X
LH3*	BP35, T350, B45, B450

Stihl

LH2*	FS50, FS51, FS55, FS60, FS61, FS65, FS80, FS83, FS85, FS86, FS90, FS91, FS96
LH5*	FS66, FS74, FS76, FS81, FS83, FS85, FS86, FS100, FS106, FS108, FS110, FS130, FS250, FS40, FS44, FS48, FS52, FS56, FS62, FS66, FS8 5, FS86, FS88, FS96, FS106, FS108, FS120, FS200, FS350, FS450, FS550

* For reference only. Indicates correct hardware to attach a Speed-Feed head to the listed trimmer.

T

Trimmer Line & Heads

Replacement Trimmer Head for Stihl 25-2 Auto-Cut

OREGON	Description	Product Code
55-993	Semi-Automatic Bump & Feed Fits FS44, FS55, FS80, FS83, FS85, FS90, FS100, FS110, FS120, FS130, FS20, FS250, KM55, KM85, KM90, KM110, KM130, & FS-KM	

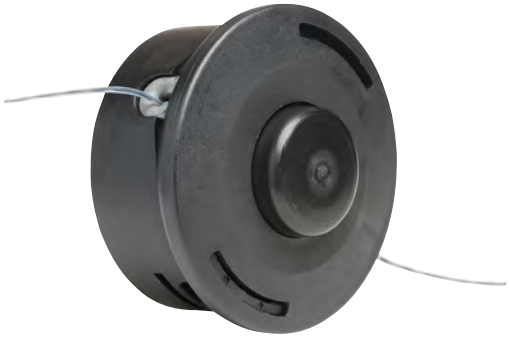

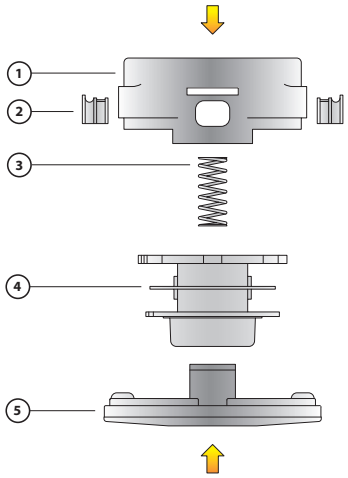

№	OREGON	Description	Product Code
Replacement Parts			
1	--	Upper Housing	
2	55-972	Eyelet	
3	55-996	Spring	
4	55-971	Spool	
5	55-973	Cover	

Multiple Application Bump & Go Trimmer Head

OREGON	Description	Product Code
55-994	**Bump & Go Trimmer Head** Fits Homelite, Ryobi, MTD, & McCulloch For curved-shaft trimmers with extended spindle shafts Includes 5/16" right hand thread, 5/16" left hand thread, & 1/4" right thread knobs	

OREGON	Description	Product Code
Replacement Parts		
55-821	5/16 RH bump knob	
55-816	5/16 LH bump knob	
55-743	1/4 RH bump knob	

T

4" Heavy-Duty Magnum Gatorhead™

With a 18" cutting swath this Magnum Gatorhead can be used on nearly all commercial straight-shaft trimmers. Constructed out of high-quality, shock-resistant nylon material, this product is designed to withstand impact damage.
Line capacity: 60' – .065" line, 40' – .080" line, 30' – .095" line, and 20' – .105" line.

OREGON	Description	Product Code
55-140-0	**Universal 4" Heavy-Duty Magnum Gatorhead** Pre-loaded with trimmer line Counterbore hardware Recess adaptor bolts Recessed base Packaged in an attractive clamshell **Adaptors Included** 8 mm x 1.25 LHM & LHF 10 mm x 1.25 LHM & LHF 10 mm x 1.0 LHF 7 mm x 1.0 LHM 3/8-24 RHF	

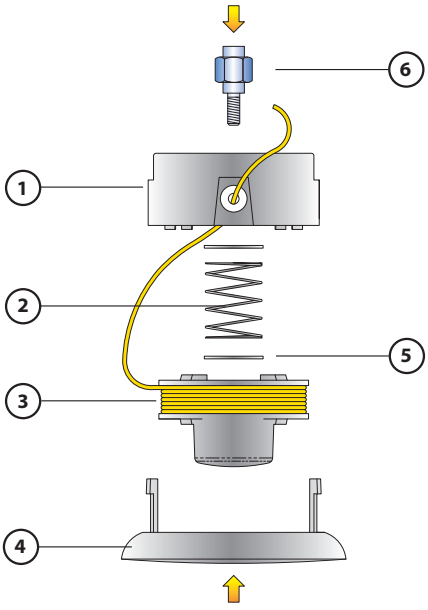

Replacement Parts

№	OREGON	Description	Product Code
1	55-159	Upper Housing	
2		Spring	
3	55-145-1	Line Spool	
4		Cap	
5	55-150-1	Spring Plate Washer	
6	55-974	12 mm Arbor Adaptor	

Replacement Parts for Diskontinued Trimmer Heads 55-141-0 and 55-068

55-141-0 replacement parts for 6" Heavy-Duty Magnum Gatorhead™

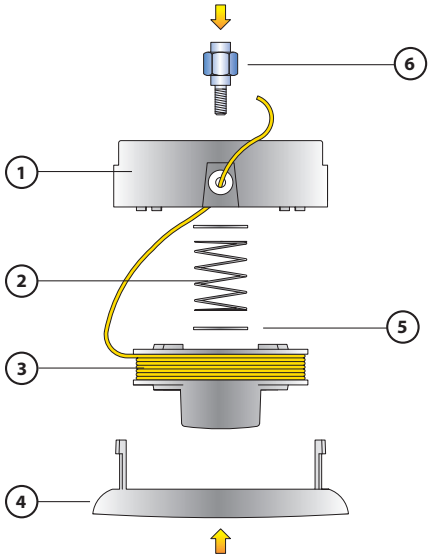

№	OREGON	Description	Product Code
55-141-0 Replacement Parts			
1		Upper Housing	
2		Spring	
3		Line Spool	
4		Cap	
5	55-150-1	Spring Plate Washer	
6	55-974	12 mm Arbor Adaptor	

55-068 replacement parts

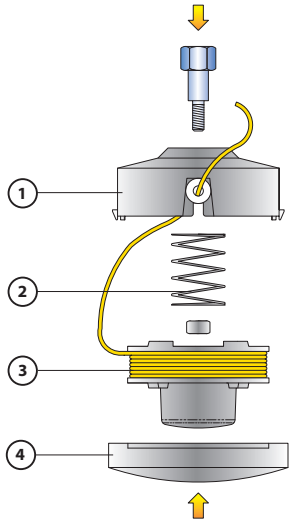

№	OREGON	Description	Product Code
55-068 Replacement Parts			
1		Housing	
2	55-142-1	Spring	
3	55-136-1	Spool & Bump Knob	
4	55-137-1	Cap	

T

Eyelet Load Bump & Feed Heads

Quickly replace trimmer line without opening head. Loads through bump knob or eyelets. Spool divider prevents line tangle. Holds 20 feet of 0.095" line.

OREGON	Description	Adaptors Included	Product Code
Lightning Load™			
55-985	Bump and Feed for straight-shaft trimmers	10 mm x 1.0 LHF 10 mm x 1.25 LHF CB 8 mm x 1.25 LHM 7 mm x 1.0 LHM	
55-986	Bump and Feed for curved-shaft trimmers	3/8-24 RHF	

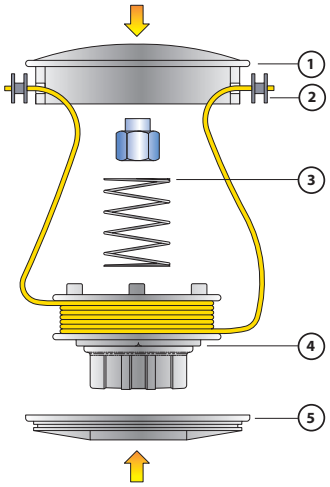

№	OREGON	Description	Product Code
55-985 Replacement Parts			
1		Housing	
2	55-556	Eyelet	
3	55-558	Spring	
4	55-559	Spool	
5	55-560	Cover	
55-986 Replacement Parts			
1		Housing	
2		Eyelet	
3	55-562	Spring	
4	55-563	Spool	
5		Cover	

Eyelet Load Bump & Feed Semi-Automatic Head

For straight-shaft trimmers. Quickly replace trimmer line through eyelets without opening head. Spool divider prevents line tangle. Holds 20 feet of 0.095" line.

OREGON	Description	Adaptors Included	Product Code
Lightning Load			
55-984	Bump and Feed semi-automatic head	7 mm x 1.00LHM 8 mm x 1.25LHM 10 mm x 1.25LHF 10 mm x 1.25 LHF CB 10 mm x 1.00 LHF CB	

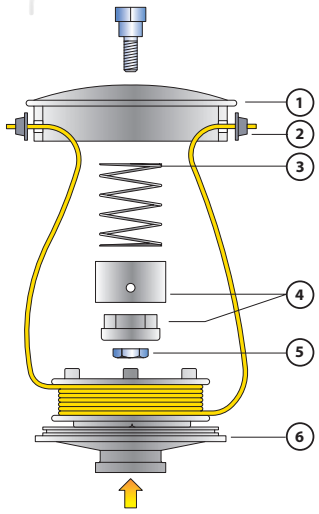

№	OREGON	Description	Product Code
Replacement Parts			
1		Housing	
2		Eyelet	
3	55-553	Spring	
4		Cam Assembly	
5		Nut	
6	55-555	Spool	

T

Trimmer Line & Heads

Pro Bump & Feed Heavy-Duty Head

Fits most straight-shaft trimmers. Works for single or dual line indexing. Large capacity will hold up to 40 feet of 0.095 line.

OREGON	Adaptors Included	Product Code
Pro Bump and Feed Heavy-Duty Trimmer Head		
55-983	7 mm x 1.00 LHM 8 mm x 1.25 LHM 10 mm x 1.25 LHF	

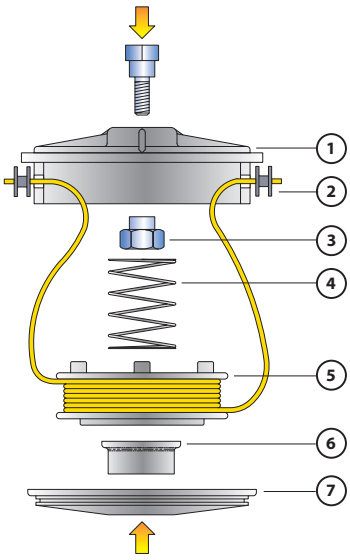

№	OREGON	Description	Product Code
Replacement Parts			
1		Housing	
2		Eyelet	
3		Nut	
4	55-545	Spring	
5	55-549	Spool	
6	55-550	Button	
7	55-551	Cover	

Bump & Feed Semi-Automatic Heads

A favorite among many major OEM's, this trimmer head features single or dual line indexing with equal line extension. Recommended for trimmers under 28cc.

OREGON	Included Bolts	Product Code
Bump & Feed Semi-Automatic Heads – 1 or 2 Line		
55-284	7 mm x 1.0 LHM 8 mm x 1.25 LHM 10 mm x 125 LHF	

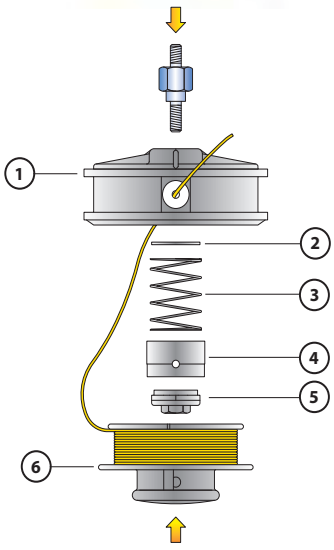

№	OREGON	Description	Product Code
Replacement Parts			
1		Housing	
2		Washer (OBS)	
3	55-302-1	Spring	
4	55-304-1	Outer Driver	
5	55-305-1	Inner Cam LH	
6	55-286	Spool (4 slots LH)	
6	55-328	Spool (4 slots RH)	

T

Two-Line Manual Feed Multi-Bolt Head

For consumer users of small, medium and large size trimmers, this heavy-duty head with manual line feed fits nearly all trimmers.

OREGON	Included Bolts	Product Code
Manual 2-Line Feed Head		
55-069-0	7 mm x 1.0 LHM 8 mm x 1.25 LHF & LHM 10 mm x 1.25 LHF & LHM 10 mm x 1.00 LHF 3/8"-24 RHF & RHM	

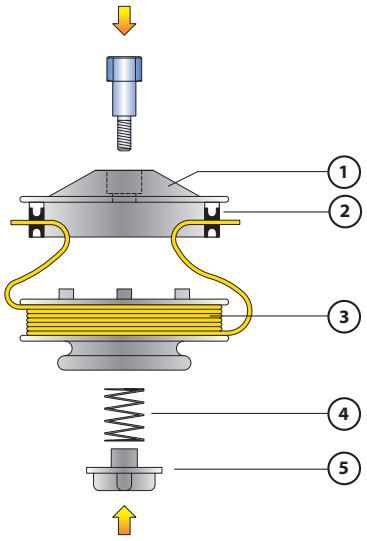

№	OREGON	Description	Product Code
Replacement Parts			
1		Housing	
2	55-002-1	Eyelets	
3		Spool	
4		Spring	
5	55-156-1	Knob	

T

Replacement Parts for Diskontinued Trimmer Heads 55-082-1 and 55-035-1

55-082-1 trimmer head replacement parts.

№	OREGON	Replacement Parts	Product Code
Replacement Parts			
1		Housing	
2	55-002-1	Eyelet	
3		Nut	
4	55-804-1	Spring	
5	55-809-1	Spool RH	
6	55-807	Button	
7	55-808-1	Cover	

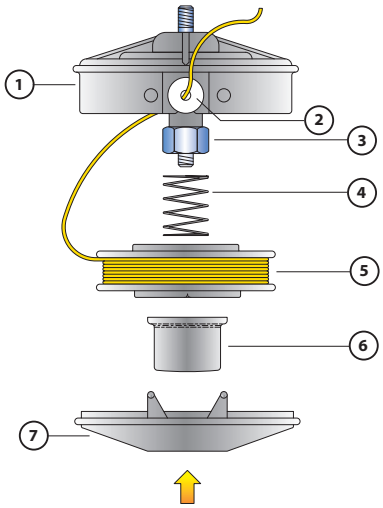

55-035-1 trimmer head replacement parts.

№	OREGON	Replacement Parts	Product Code
Replacement Parts			
1		Housing	
2	55-002-1	Eyelet	
3	55-302-1	Spring	
4	55-355-1	Spool	
5	55-356-0	Button	
6	55-357-1	Cover	

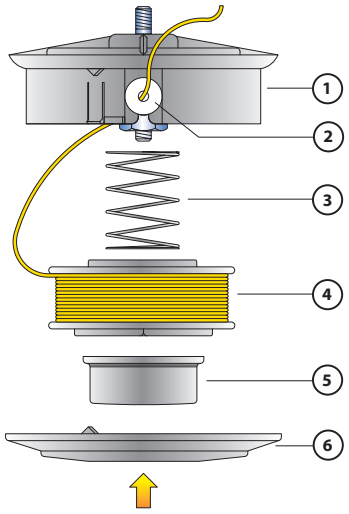

Jet-Fit™ Trimmer Heads

An easy-to-load fixed-line head designed for use with FlexiBlade™. These heads also work with all types and sizes of trimmer line, and fit the majority of counterclockwise-turning trimmers. Jet-Fit heads mount on trimmers using the trimmer's blade bolt or nut and one of the basic adapter washers included (8mm, 10mm, 12mm, 15mm) or the reduction-ring adapter for trimmers requiring a 20 mm arbor. The adaptors packaged with Jet-Fit heads also include several others for fit-up to trimmers having different mounting requirements.

NOTE: Jet-Fit heads are attached using the trimmer's blade bolt or nut mounting bolts are not packaged with Jet-Fit heads. In Canada, Jet-Fit heads have been replaced with Flexihead™ trimmer heads:

- Oregon® 55-403 is Oregon 55-407 in Canada
- Oregon 55-404 is Oregon 55-408 in Canada

55-403 **2-Line Aluminum Jet-Fit Trimmer Head**
Use on trimmers > 25cc

OREGON	Description	Product Code
55-485	Pawl & Spring Kit 4 pieces: 2 springs & 2 pawls	
55-488	Glide Cone	

Kwik Loader® Trimmer Heads

55-406-0 **Jet Fit™ Express Trimmer Head**
Adaptors, bolts and nuts included to fit most trimmers
The Oregon® Jet-Fit Express head features square eyelets making it an excellent choice for use with FlexiBlade™. Easy loading and unloading, just push to load and pull to unload. Square eyelets hold FlexiBlade securely, and at the right angle for maximum cutting force.
Can be used with all sizes and shapes of line
Packaged in clamshells for easy display and easy sales

OREGON	Description	Product Code
55-417	Square Eyelets For Oregon 55-406-0 Package of 2	

NOTE: In Canada this Jet-Fit Express Head has been replaced with Flexihead™ Trimmer Head P/N 55-409.

T

Trimmer Line & Heads

OREGON	Replaces	Description	Product Code

Pivotrim® Trimmer Heads

55-491 **Pivotrim Pro Trimmer Head**
Fits 99% of straight-shaft gas trimmers
Quick reloads and uses less line
Uses .105" line or smaller
Designed for professional landscapers

OREGON	Description	Product Code
55-492	Replacement eyelet For Oregon 55-491 Pro Pivotrim	

Pivotrim Trimmer Line

OREGON	Description	Product Code
19-037	24-pack of 12" line, .095" diameter	
19-038	24-pack of 12" line, .105" diameter	

Fixed Line Head

This heavy-duty commercial design offers easy line changes, without the need for disassembly or tools. Die-cast aluminum head mounts using one adaptor and the trimmer's blade bolt or nut. Uses one 16" trimmer line. Line capacity: .080", .095", .130", & .155". Includes replaceable plastic glide plate.

NOTE: Use .155" line on straight-shaft trimmers with engines 31cc and larger.

OREGON	Description	Adaptors Included	Product Code
55-191	Die-cast aluminum Fixed-line trimmer head Ships with .130" line	Included for most trimmers	
55-194	Glide Cone For 55-191		

T

WARNING: High-speed cutting tools present risk of serious injury to operators or bystanders from thrown objects or from contact with rotating cutting attachments. Read and follow all instructions below for proper fitting and for safe and proper use of blades and trimmer heads.

Attention Dealers

OREGON® URGES YOU TO READ AND FOLLOW ALL OF THESE SAFETY GUIDELINES WHEN SELECTING, INSTALLING, SERVICING OR OPERATING ANY CUTTING ATTACHMENTS FOR TRIMMERS OR BRUSHCUTTERS. ENCOURAGE YOUR CUSTOMERS TO DO THE SAME.

The application charts on the following pages are based on the best information available to Oregon at the time of printing. We take care that listed applications are accurate, but it is your responsibility to assure that Oregon cutting attachments are correctly and appropriately fitted to equipment you service. Some trimmers and brushcutters offer more than one cutting-attachment shield. Be sure to use the appropriate shield for the cutting attachment installed. Inadequate shielding can expose operators and bystanders to the risk of serious injury.

Important safety and maintenance information is often printed on Oregon packaging. When installing new cutting attachments, do not diskard such packaging — give it to your customer.

Trimmer/Brushcutter Safety Instructions

Check that cutting-attachment shields are properly located and in good condition. Never remove, modify or in any way compromise the cutting-attachment shield to accommodate a cutting attachment, or for any other reason. The shield protects against inadvertent contact with the cutting attachment and reduces the risk of the operator and bystanders being struck by objects that may be picked up and thrown violently by the rotating tool. **Read and follow all instructions supplied by the manufacturer of the trimmer/brushcutter.** Manufacturers' instructions include important additional information regarding safe use and proper maintenance procedures for their products.

Rigid blades must be used only on brushcutters designed to accommodate blades. Never use a metal cutting attachment on a brushcutter without a shoulder harness, properly mounted barrier handlebar and cutting-attachment shield in good condition. Never remove the cutting-attachment shield. These features are designed to minimize the risk of inadvertent contact with the cutting blade, reduce the risk of injury to the operator and bystanders from thrown objects and to aid in control of the brushcutter. Contact with rigid blades can result in severe bodily injury.

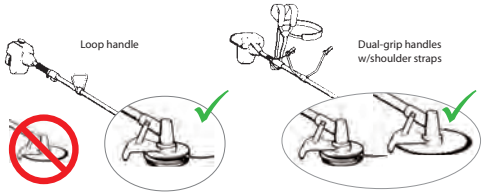

Be certain that replacement cutting attachments are fitted properly with regard to the direction of rotation, the size of the mounting bolt and the size of the arbor. Improperly mounted attachments can damage the machine or work loose and be thrown off, causing injury to the operator or bystanders. Do not mount any attachment on any trimmer or brushcutter without a solid, secure fit of all parts.

Do not install Oregon trimmer heads on any trimmer capable of spinning the attachment faster than 10,000 RPM. And do not install Oregon metal blades on any brushcutter capable of spinning the blade faster than 10,000 RPM. Speeds higher than these may cause the cutting attachment to break and fly apart, especially if they become damaged in use, with pieces possibly striking and injuring the operator or bystanders.

Check the condition of cutting attachments frequently. Always replace cutting attachments that are cracked, bent, or warped—even if such damage appears to be superficial. Never attempt to repair damaged cutting attachments by welding or bending. There is a risk that damaged cutting attachments will fly apart, with pieces possibly striking and injuring the operator or bystanders.

Always wear eye, face, ear, hand, leg, and foot protection during operation. These precautions reduce the risk of injury from noise or from material that may be thrown by the cutting attachment. Do not wear shorts or short-sleeved shirts. Wear safety glasses or similar eye protection.

Keep bystanders and pets at least 50 feet (15m) away in all directions. Always clear the work area of rocks, glass, wire, nails, or other foreign objects that can be picked up and thrown by the rotating cutting attachment. Trimmers and brushcutters can violently throw loose objects, or uncontrollably thrust away from objects they contact but cannot cut. Keep bystanders away.

Sharpen or maintain the cutting attachment according to instructions packaged with the attachment. A dull tool is more difficult to use. Failure to sharpen, or incorrect sharpening of metal blades, can lead to cracks that may result in breakage, exposing the operator and bystanders to the risk of serious personal injury.

Use cutting attachments to cut only the types of material for which the attachment is designed. If used improperly, cutting attachments may become damaged and may break, increasing the risk of serious personal injury to the operator or bystanders.

Diskonnect power to the trimmer/brushcutter before performing any service. There is always a risk that the cutting attachment will inadvertently be started if the machine is under power.

Do not install metal blades on curved-shaft trimmers.

For safety reasons, metal blades should not be attached to straight or curved-shaft trimmers with a **loop-handle**. Use only nylon-line heads on these trimmers.

Dual-grip handle bar type trimmers equipped with shoulder straps and proper cutting-attachment shields can accept either metal blades or nylon-line heads.

Trimmer Head Application Chart

Model Numbers & Mounting Bolts	HD Commercial Bump & Feed	HD Commercial Bump & Feed (Eyelet Load)	Bump & Feed	Bump & Feed (Eyelet Load)	4" Heavy-Duty Magnum Gator-head™	2–Line Speed Feed 3.75" LH	Lightning Load™ Bump & Feed 4.25" LH	Lightning Load Bump & Feed 5.00" LH	Cool Head Bump & Feed 4.50" RH	Cool Head Bump & Feed 6.00" LH
Alpina										
170, 180, 200										
8mm x 1.25 LHM	55-987	55-984	55-983	55-985	55-140-0	55-294*	55-989	55-990		55-992
21, 25, 30, 34, 34D, 34F, 42, 42D, 42F, 52, 52D, 52F, 160										
8mm x 1.25 LHF					55-140-0	55-294*	55-989	55-990		
210										
10mm x 1.25 LHF	55-987	55-984	55-983	55-985	55-140-0	55-294*	55-989	55-990		55-992
Ariens										
BC-350, BC-400, TB-220E, TB260										
8mm x 1.25 LHM	55-987	55-984	55-983	55-985	55-140-0	55-294*	55-989	55-990		55-992
LT-210, LT210e										
8mm X 1.25 RHF										
Arimitsu										
AC-ZEK, ACC-17, ACD-17, ACD-18, ACE-30, AM-31, AM31K, AM40, AM-50, ACC-15, AM-16D, AM-24D										
8mm x 1.25 LHM	55-987	55-984	55-983	55-985	55-140-0	55-294*	55-989	55-990		55-992
Astron										
S250 (1984, 1986), S150 (1986), S250 (1983), 256E, KFS4 SERIES, KFS12										
7mm x 1.0 LHM	55-987	55-984		55-985	55-140-0	55-294*	55-989	55-990		55-992
KFS22, KFS24, P750, PK2400E, PK3300E										
8mm x 1.25 LHM	55-987	55-984	55-983	55-985	55-140-0	55-294*	55-989	55-990		55-992
S250 (1988)										
10mm x 1.25 LHF	55-987	55-984	55-983	55-985	55-140-0	55-294*	55-989	55-990		55-992
Black+Decker										
82255, 82257, 82267. 8271-04, 8289-4										
3/8-24 RHF	55-032-1			55-986					55-991	
8DP 385										
7/16-20 RHF										
17CCM TRIMMER										
8mm x 1.25 RHF										
Brush King										
BK32, BK32LT, BK49, BK85, BK100										
8mm x 1.25 LHM	55-987	55-984	55-983	55-985	55-140-0	55-294*	55-989	55-990		55-992
Bunton										
LBS 18K, LB 24S K										
8mm x 1.25 LHF					55-140-0	55-294*	55-989	55-990		

WARNING: Improperly installed trimmer attachments can create a risk of personal injury to the trimmer operator or bystanders. Improperly installed attachments can work loose and be thrown off the trimmer. In some cases, mounting bolts may not securely fit all intended trimmer models, for example: there may be a difference in the size of the bolt's counterbore versus the counterbore on the trimmer. Do not install any attachment on any trimmer without a solid, secure fit of all parts.
ATTENTION DEALERS: Install heads only on trimmers that are within the size range (cc displacement or horsepower) for which the head is intended. Performance will suffer if the type of head and the size of trimmer are not properly matched. Read and follow all of the Important Safety Information.

F = Female • **M** = Male • **LH** = Left-hand • **RH** = Right-hand • **CB** = Counterbore

*order 55-265 for 450 LH Speed Feed

Trimmer Head Application Chart

Model Numbers & Mounting Bolts	HD Commercial Bump & Feed	HD Commercial Bump & Feed (Eyelet Load)	Bump & Feed	Bump & Feed (Eyelet Load)	4" Heavy-Duty Magnum Gator-head™	2–Line Speed Feed 3.75" LH	Lightning Load™ Bump & Feed 4.25" LH	Lightning Load Bump & Feed 5.00" LH	Cool Head Bump & Feed 4.50" RH	Cool Head Bump & Feed 6.00" LH
Bunton										
LBS33K										
10mm x 1.5 LHF						55-294*	55-989	55-990		
Cifarelli										
STANDARD										
10mm x 1.25 LHF	55-987	55-984	55-983	55-985	55-140-0	55-294*	55-989	55-990		55-992
Danarm										
23MK1, 23MK2, 33										
10mm x 1.5 LHF										
32, 35, 40, 50										
10mm x 1.25 LHM					55-140-0	55-294*	55-989	55-990		
MK2, MK23E, MK3, TORNADO										
8mm x 1.25 LHF					55-140-0	55-294*	55-989	55-990		
WHIPPER MK3										
10mm x 1.25 LHF	55-987	55-984	55-983	55-985	55-140-0	55-294*	55-989	55-990		55-992
Dolmar (see Sachs)										
BC-225, LT-154, LT225, MS220, MS2300, MS2600, MS3100, MX20C, MS2501, MS28210, MS3210, NB2, NBA231, NB, NB01F, NB02, NB16F, NB2, NB211, NBF171, NB26, NB31										
8mm x 1.25 LHF					55-140-0	55-294*	55-989	55-990		
LT16, LT20, BC210, BC212, BDC212										
3/8-24 RHF	55-032-1			55-986					55-991	
MS340, LT250										
10mm x 1.25 LHF	55-987	55-984	55-983	55-985	55-140-0	55-294*	55-989	55-990		55-992
300, 400, MS-300, MS-4000, MS-4500										
12mm x 1.5 LHF										
BC300, BC400, LT250, SD330, PRO370/400										
10mm x 1.25 LHM					55-140-0	55-294*	55-989	55-990		
BC250, BC337, BC377, LT225, LT250, NB03/04/26, NB40, NB411, NB50										
10mm x 1.0 LHF	55-987		55-038-1	55-985	55-140-0	55-294*	55-989	55-990		
LT225										
8mm x 1.25 RHF										
Echo										
CLS4600										
12mm x 1.75 LHF										
GT SERIES: 100, 140, 140A, 140B, 160, 160AE, 200, 200A, 200B, 200BE, 200CE,251, 1000, 1100, 1100A, 2000, 2000SB, 2100, 2101, 2102, 2103, 2200, 2301, 2400; SRM2000, SRM210AE										
3/8-24 RHF	55-032-1			55-986					55-991	

T

Trimmer Head Application Chart

Model Numbers & Mounting Bolts	HD Commercial Bump & Feed	HD Commercial Bump & Feed (Eyelet Load)	Bump & Feed	Bump & Feed (Eyelet Load)	4" Heavy-Duty Magnum Gator-head™	2–Line Speed Feed 3.75" LH	Lightning Load™ Bump & Feed 4.25" LH	Lightning Load Bump & Feed 5.00" LH	Cool Head Bump & Feed 4.50" RH	Cool Head Bump & Feed 6.00" LH
Echo										
SRM SERIES:140/A/D/DA, 200/A/AE/BE/CE/D/DA/DB/DE, 202:DA/FA, 210/AE/E/I/SB/U, 220, 225:I/SB/U, 230/S/U, 250/E/EL/EU, 251, 260/S/U, 261, 265/S/T/U, 280/S/T/U, 300/AE/AE1/E/E1/U, 302/ADX/BDX, 303E, 310/U, 311/S/U, 330, 340, 343/SL, 350, 400/AE/B/BE/E/U, 402DE, 500, 501, 1500/A, 1501, 2090:L/U, 2010L, 2100/SB, 2101, 2110, 2200, 2201, 2300, 2301, 2350, 2400/SB, 2410, 2450, 2500, 2501/S, 2502, 2510, 2530, 2601, 3000, 3001, 3010, 3100/S, 3110, 3400, 3410, 3500, 3550, 3800, 4600; CLS4600, GT2010, RM:310/380/460, RMA2530, SRA2190									
10mm x 1.25 LHF	55-987	55-984	55-983	55-985	55-140-0					55-992
Efco										
DS2200S, DS2200T, DS2400S, DS2400T, DS 2700S, DS2800S, DS2800T, DS3000T, DS3500S, DS3500T										
10mm x 1.25 LHF	55-987	55-984	55-983	55-985	55-140-0					55-992
200, 2601C, 300AIC, 400A, 460, 261A, 310, 410, JET200, 260, 261, 300A, 8420, 8420IC, 8510, 8510IC, 8425, JET350, JET400, 220IC, 260ICAV, 260D, 300AIC, 460/AVS, 8060, 8200, 8220IC, 835, 8400IC, 8300, 8350, 8400, 301, 350, 220IC, 260D, 2650ICAV, 8100, 8515, JET450, JET460										
8mm x 1.25 LHM	55-987	55-984	55-983	55-985	55-140-0	55-294*	55-989	55-990		55-992
JET/401/400/301/300										
8mm x 1.25 LHF					55-140-0	55-294*	55-989	55-990		
DS2200TR										
8mm x 1.25 RHF										
Flymo										
D2										
8mm x 1.25 LHF					55-140-0	55-294*	55-989	55-990		
Green Machine										
GT35B, GT40B, GT41, SRM3000, SRM3000LP, SRM3000SS, SRM3040M, 525H, 1200, 1500, 1600, 1700, 1930, 1940, 1950, 2000, 2100, 2130, 2200, 2230, 2300, 2331, 2340, 2345, 2500, 2500-LP, 2510-LP, 2540, 2540LP, 2600, 2800, 2810, 2840, 2841, 2850, 3000, 3000B, 3000J, 3000-LP, 3000M, 3000SS, 3040M, 3 050M, 3451, G2A, G2C, GT20, GT21, GT22, GT25, GT31, GT31B										
8mm x 1.25 LHM	55-987	55-984	55-983	55-985	55-140-0	55-294*	55-989	55-990		55-992
4000, 4000B, 4000J, 4000M, 4000LP, 4500, 4500LPX, 4600LPX, BC250, BC400, D-17, D-18, G4C, SRM4000, SRM400LP, SRM4000M										
10mm x 1.25 LHM					55-140-0	55-294*	55-989	55-990		
99D, 99G, 1730, 1800, 1900										
7/16-20 RHF										
Hoffco										
GR320B, GTX, GTS-R, HOFFIE-22, LIL WIZ 600, LIL WIZ 1600, P22, WC-22, WC-215, WT SERIES: 14, 160, 160H, 160HT, 215, 250C, 250HT, 1600, CRITTER, GT SERIES: 14A, 14B, 14H, 21, 22, 160B, 160T, 160TL, 210, 211, 211A, 215T, 225, 225SPL, 256SPL, 320B, 320HT, 320T, 380; 250HT-A, 250WT, 320, 320H										
3/8-24 RHF	55-032-1			55-986					55-991	
WW88, WW850										
7/16-20 RHF										
JP SERIES: 215, 215GT, 220F, 225, 260, 260A, 260C, 270, 300, 300A, 300B, 300C, 300F, 320, 390, 390A, 390C, 390XL, 420, 420D, 660										
10mm x 1.25 LHF	55-987	55-984	55-983	55-985	55-140-0	55-294*	55-989	55-990		55-992

WARNING: Improperly installed trimmer attachments can create a risk of personal injury to the trimmer operator or bystanders. Improperly installed attachments can work loose and be thrown off the trimmer. In some cases, mounting bolts may not securely fit all intended trimmer models, for example: there may be a difference in the size of the bolt's counterbore versus the counterbore on the trimmer. Do not install any attachment on any trimmer without a solid, secure fit of all parts.
ATTENTION DEALERS: Install heads only on trimmers that are within the size range (cc displacement or horsepower) for which the head is intended. Performance will suffer if the type of head and the size of trimmer are not properly matched. Read and follow all of the Important Safety Information.

F = Female • **M** = Male • **LH** = Left-hand • **RH** = Right-hand • **CB** = Counterbore

*order 55-265 for 450 LH Speed Feed

Trimmer Head Application Chart

Model Numbers & Mounting Bolts	HD Commercial Bump & Feed	HD Commercial Bump & Feed (Eyelet Load)	Bump & Feed	Bump & Feed (Eyelet Load)	4" Heavy-Duty Magnum Gator-head™	2–Line Speed Feed 3.75" LH	Lightning Load™ Bump & Feed 4.25" LH	Lightning Load Bump & Feed 5.00" LH	Cool Head Bump & Feed 4.50" RH	Cool Head Bump & Feed 6.00" LH
Homelite										
HBC-30, HK-18 (1986 & newer), HK-24 (1986 & newer), HK-25, HK-30 (1985 & older) , HK-33 (1986 & newer), HK38, PBC3600, PBC-3800, PBC-4000, ST155, ST175, ST385, ST485, HK15, HK28, HK38, BCH SERIES, BCH20, BCH24, BCH32C, BCH32CDI, BCH33/B/DI/TO, BCH40, BCH48, HBC30, HBC30B, HBC38, PBC3600, PBC3800, PLT3400, ST385CG, PBC4000ST-285, ST-485, ST-385, ST20, ST40, ST60, ST100, ST200, ST400, SXD20, RK521, TK518										
8mm x 1.25 LHF					55-140-0	55-294*	55-989	55-990		
HK-24 (1985 & older) HK-30 (1986 & newer), HK-33 (1985 & older)										
8mm x 1.25 LHM	55-987	55-984	55-983	55-985	55-140-0	55-294*	55-989	55-990		55-992
ST-175C, ST-185										
7/16-20 RHF										
NBA524, PMB522, TXD508, SX040, FK514, SXD40, TXD508										
10mm x 1.25 LHM					55-140-0	55-294*	55-989	55-990		
ST160, ST180, ST200, ST210, ST385, ST485,										
3/8-24 LHF										
HBC38, HBC40, PBC3800, PBC4000, PMB52, HBC48										
10mm x 1.25 LHF	55-987	55-984	55-983	55-985	55-140-0	55-294*	55-989	55-990		55-992
HBC20, HBC24, HBC32C, HBC33, ST200, ST360, ST80SXD20, TK518, RK521, ST100, ST120, ST155, ST175CG										
8mm x 1.25 RHM										
D630CD, D730CD, D730CDV, HLT-15, ST-135, ST-155, ST-175, ST-725CDR, Z625CD, Z725CA, Z725CB, Z725CDV, Z725CE, Z725CEA, Z735SE										
5/16 x 18 RHM		55-053								
ST145, ST155, ST175, ST175G, ST185, ST285, ST385BC, ST485, SX135, EASY TRIM, 20680, 77, ZR SERIES, D830CA, D830CB, D830SB, D830SD, EASY REACH, PLT-3400, PLTA-3400, VERSA TOOL, Z825SD, Z830SB, Z830SBA										
Extended Spindle										
ST 80/100/120/160/180/200/210/360/385(EURO)										
8mm x 1.25 LHM	55-987	55-984	55-983	55-985	55-140-0	55-294*	55-989	55-990		55-992
ST 20/40/60/100/200/400, SXD20, RK521, TK518										
8mm x 1.25 LHF					55-140-0	55-294*	55-989	55-990		
AT-160, ST-180, ST-200, ST-210										
3/8-24 LHF										
Honda										
UMK422LNA/LTA, UMK431LNA/TA/UNBA, HHT25SLTAT, HHT35SLTAT, HHT35SUKAT										
10mm x 1.25 LHF	55-987	55-984	55-983	55-985	55-140-0	55-294*	55-989	55-990		55-992
Husqvarna										
(UP TO '86) 16R, 22R, 24R, 25RL										
8mm x 1.25 LHM	55-987	55-984	55-983	55-985	55-140-0	55-294*	55-989	55-990		55-992
16R (AFTER '86) , 18R, 18RL, 22R (AFTER '86), 22RL, 25R (AFTER '86), 25RL, 36R, 39R, 120L, 120R, 125L, 125LD, 125R, 125RD, 125RJ, 132L, 132LD, 132R, 132RD, 132RJ, 140R, 132R, 132RD, 132RJ, 140R, 165RX, 235R, 240R, 240RBD, 244R, 244RS, 245R, 245RX, 250RX, 252RX, 265RX, 165RX, 235R, 240R, 240RBD, 244R, 244X, 245R, 245RX, 265RX, 232L, 232LCAT, 32R, 225R, RD, 232R, 232RCAT, 235RCAT, 125L/LD/R/RB/RJD/, 165R, 165TX, 36R, 39R26R, 32L, 39R, 244R (EURO)										
12mm x 1.75 LHF										
HUSKY 27GTS, 244R, 250RX322C, 325LX, 322L, 322R, 240RJ, 250R, 325RX										
10mm x 1.5 LHF										

T

Trimmer Head Application Chart

Model Numbers & Mounting Bolts	HD Commercial Bump & Feed	HD Commercial Bump & Feed (Eyelet Load)	Bump & Feed	Bump & Feed (Eyelet Load)	4" Heavy-Duty Magnum Gator-head™	2–Line Speed Feed 3.75" LH	Lightning Load™ Bump & Feed 4.25" LH	Lightning Load Bump & Feed 5.00" LH	Cool Head Bump & Feed 4.50" RH	Cool Head Bump & Feed 6.00" LH
Husqvarna										
24R (UP TO SER#603702)										
7mm x 1.0 LHM	55-987	55-984		55-985	55-140-0	55-294*	55-989	55-990		55-992
26LC, 26RLC, 32LC, 32RLC, MONDO, 32L, 32RL, 32R, 32RL, 216CN, 23LC, 26LC, 26RLC, 32LC, 32RLC, MONDO										
3/8-24 RHF	55-032-1			55-986					55-991	
32L/P, 32LR, 32R, 32RLC, 21LCN, MONDO										
3/8-24 LHF										
122L,123L, 225L, 225LD, 225R, 225RD, 225RJ, 227LD, 232L, 232R, 322L, 322R, 324LX, 325LX, 325R, 326LS, 326LX, 335LS										
10mm x 1.25 LHF	55-987	55-984	55-983	55-985	55-140-0	55-294*	55-989	55-990		55-992
32R (1986 & older)										
10mm x 1.5 LHM										
21LCN, 23LC, 322C, 325C										
5/16 x 24 RHF										
120LC										
12mm x 1.75, RHF										
Ideal										
S20										
10mm x 1.25 LHF	55-987	55-984	55-983	55-985	55-140-0	55-294*	55-989	55-990		55-992
S25, SX230, SX260										
8mm x 1.25 LHF					55-140-0	55-294*	55-989	55-990		
Ikra										
BT1045										
8mm x 1.25 LHM	55-987	55-984	55-983	55-985	55-140-0	55-294*	55-989	55-990		55-992
Iseki										
DYB201, DYB202										
7mm x 1.0 LHM	55-987	55-984		55-985	55-140-0	55-294*	55-989	55-990		55-992
DYB251, DYB252, DYB254										
8mm x 1.25 LHM	55-987	55-984	55-983	55-985	55-140-0	55-294*	55-989	55-990		55-992
DYB351, DYB354, DYB453										
10mm x 1.25 LHM					55-140-0	55-294*	55-989	55-990		
IDC										
540, 540-1, 540-2, 540 SUPREME, 580, 580-1, 580-2, 580 SUPREME										
10mm x 1.25 LHF	55-987	55-984	55-983	55-985	55-140-0	55-294*	55-989	55-990		55-992

T

WARNING: Improperly installed trimmer attachments can create a risk of personal injury to the trimmer operator or bystanders. Improperly installed attachments can work loose and be thrown off the trimmer. In some cases, mounting bolts may not securely fit all intended trimmer models, for example: there may be a difference in the size of the bolt's counterbore versus the counterbore on the trimmer. Do not install any attachment on any trimmer without a solid, secure fit of all parts.
ATTENTION DEALERS: Install heads only on trimmers that are within the size range (cc displacement or horsepower) for which the head is intended. Performance will suffer if the type of head and the size of trimmer are not properly matched. Read and follow all of the Important Safety Information.

F = Female • **M** = Male • **LH** = Left-hand • **RH** = Right-hand • **CB** = Counterbore

*order 55-265 for 450 LH Speed Feed

Trimmer Head Application Chart

Model Numbers & Mounting Bolts	HD Commercial Bump & Feed	HD Commercial Bump & Feed (Eyelet Load)	Bump & Feed	Bump & Feed (Eyelet Load)	4" Heavy-Duty Magnum Gator-head™	2–Line Speed Feed 3.75" LH	Lightning Load™ Bump & Feed 4.25" LH	Lightning Load Bump & Feed 5.00" LH	Cool Head Bump & Feed 4.50" RH	Cool Head Bump & Feed 6.00" LH
IDC										
120, 130B, 364, 364-1, 365, 385, 500, 500 SUPREME, 500-1, 500-2, 520, 520-1, 530, 530B, 520-2										
5/16 x 18 RHM										
John Deere										
21C, 80G, 82, 82G, 83G, 85, 100G, 110G, 120G, 200G, 210G, 220G, 250G										
3/8-24 RHF	55-032-1			55-986					55-991	
90G, 220G, 250G, 300G, 350G, 450G, 240G, 260G, 21S, 24S, 25S, 30S, 38B, 38R, 60G, 240G, 250G, 260G, 300G, 305, 350G, 360G, 380G, 385, 450G, 460G, T105S, XT105/SB, XT120, XT140/B/SB, XT170/B, XT250B										
10mm x 1.25 LHF	55-987	55-984	55-983	55-985	55-140-0	55-294*	55-989	55-990		55-992
BC1600, S1400										
8mm x 1.25 LHF					55-140-0	55-294*	55-989	55-990		
C1200										
Jonsered										
BP40, BP40 COMBI, BP2040, BR400, BR420, BR450, BR460, BR480, GT21L, GT22L, GT24L, GR26 COMBI, GR26D, GR26L, GR32L GR32L CAT, GR2026CL, GR2026D, GR2032, GR2032D, GR3032L, GR2036; LR SERIES: 200, 220, 220B, 220L, 260, 260B, 260L, 300, 320, 400, 420, 450, 460, TIGER 40, LR200, LR220B, LR260, LR320, LR300, BR400, BR500, LR400, LR420, LR450, LR460, GR32L, GR32LCAT, BP40, BP40 COMBI, BP2040, BR400, BR420, BR450, BR460, BR480, GT21L, GT22L, GT24L, GR26 COMBI, GR26D, GR26L, GR32L GR32L CAT, BIG RED 400, LIT/RID30										
8mm x 1.25 LHM	55-987	55-984	55-983	55-985	55-140-0	55-294*	55-989	55-990		55-992
CR41, RS38, RS40, RS45, RS51, GR36, GR51										
8mm x 1.25 RHF										
RS38ANCIEN, RS38 older										
10mm x 1.0 LHF	55-987		55-038-1	55-985	55-140-0	55-294*	55-989	55-990		
RS44, GR44, GR41, J40D, KQ20/30 (EURO)										
10mm x 1.25 LHF	55-987	55-984	55-983	55-985	55-140-0	55-294*	55-989	55-990		55-992
GT25L, GT26, GT26L										
3/8-24 RHF	55-032-1			55-986					55-991	
RS51PRO, RS40/45/30, GR50/3636CAT/32D, GR32DCAT, R45, RS38 NOUVEAU, RS38 newer										
12mm x 1.75 LHF										
GT32										
3/8-24 LHF										
Kaaz										
BS400, BX440, BX540, G3CR, G4CR, J40FD, J400G, J400GX, J480, J4BD, JQ40, JQ50, K10, K40D, KQ30, KQ30B, KT10, KT30R, RQ30, RQ30B, K40D, RQ30B, T50, T240, U10, V15, V18, V25, V35, V40, VX221/251C/360S/360/440, RX350/351L, VRX360/440/540, JLQT200, JQ, JQ40/50, T240, T30, T50, U10, V15, V18, V25, V35, V40, VRP201, VRP301, VRP400, VRS201, VRS301, VRS400, VRX360, VRX440, VRX540, VS300, VS400, JQG4K, JQT200, T170, T240, 410, J400GX, RQ30, T3, VPS301, VRX430										
10mm x 1.25 LHF	55-987	55-984	55-983	55-985	55-140-0	55-294*	55-989	55-990		55-992
V20										
7mm x 1.0 LHM	55-987	55-984		55-985	55-140-0	55-294*	55-989	55-990		55-992
G3CR, G4CR, K20, KLQ20, KQ20, KQ30B, KQ40, KQP20B, KT15R, KT17R, KT18R, RQ20, RQP20, V20, VP15, VP20, VRS200, VRS300, VS220, LPQ20B, VP200, VS250, VX23, VX260, VS250, VS230, VX260, VSP250										
8mm x 1.25 LHF					55-140-0	55-294*	55-989	55-990		

T

Trimmer Head Application Chart

Model Numbers & Mounting Bolts	HD Commercial Bump & Feed	HD Commercial Bump & Feed (Eyelet Load)	Bump & Feed	Bump & Feed (Eyelet Load)	4" Heavy-Duty Magnum Gator-head™	2–Line Speed Feed 3.75" LH	Lightning Load™ Bump & Feed 4.25" LH	Lightning Load Bump & Feed 5.00" LH	Cool Head Bump & Feed 4.50" RH	Cool Head Bump & Feed 6.00" LH
Kawasaki										
KBL23A, KBL26A										
8mm x 1.25 LHM	55-987	55-984	55-983	55-985	55-140-0	55-294*	55-989	55-990		55-992
Kubota										
D200(23cc), DS300(31cc), D100, D210, D300										
8mm x 1.25 LHF					55-140-0	55-294*	55-989	55-990		
BS310, D110, F410										
10mm x 1.25 LHM					55-140-0	55-294*	55-989	55-990		
F300, F400										
10mm x 1.5 LHF										
K410										
10mm x 1.25 LHF	55-987	55-984	55-983	55-985	55-140-0	55-294*	55-989	55-990		55-992
Lawn Boy										
1460, 1480, 51606, 51607M, 51608, 51650, 51655, 51660, 51665, 61653, 51908, 51909, 51918, 51919, 1480/CC, 61653, 61953										
10mm x 1.25 LHF	55-987	55-984	55-983	55-985	55-140-0	55-294*	55-989	55-990		55-992
1100, 1150, 1300, 1330, 1360, 1400, 3100, 3130, 3160, 51620, 51638, 51903, 51906, 51911, 51916 SS1, SS11, 51920, 51926, 61620, 61638,										
Makita										
EM4251, RB251, RBC221, RBC230, RBC251, RBC252, RBC255, RBC260, RBC261, EBC281, EBC310, RBC311, RBC321, RST250, RBC410, RBK410										
8mm x 1.25 LHM	55-987	55-984	55-983	55-985	55-140-0	55-294*	55-989	55-990		55-992
DBC3300, DBC4000, DBC4000C										
12mm x 1.5 LHF										
Marunaka										
T240DX/F53L, T240DX/F53, BC480DX, G13K, G3, G5, G8K										
10mm x 1.25 LHM					55-140-0	55-294*	55-989	55-990		
TM33DX/F43L, TM33DX/F43, T200DX/F43L, T200DX/F43, TM33JX/F404L, T200JX/F404L, BC33DX, BC400DX, BK404FX										
10mm x 1.5 LHF										
TM21DX/F3L, TM24DX/F3L, BC181DX, DC200DX, BC240DX, BC180DX										
8mm x 1.25 LHF					55-140-0	55-294*	55-989	55-990		
BT181DX										
8mm x 1.25 RHF										
Maruyama										
BS184, BC184C, BC200, BC201, BC230, BC241, BC260, BC260H, BC310, BC320, BC320H, BC326, BC340DL, BC402, BC420H, BC500, BC500H, BC2300, BC2600, BC3200, BC4200H, BCGX22, BCGX31, BCL2250, BCL2250C, MC-5, NC8										
8mm x 1.25 LHM	55-987	55-984	55-983	55-985	55-140-0	55-294*	55-989	55-990		55-992

WARNING: Improperly installed trimmer attachments can create a risk of personal injury to the trimmer operator or bystanders. Improperly installed attachments can work loose and be thrown off the trimmer. In some cases, mounting bolts may not securely fit all intended trimmer models, for example: there may be a difference in the size of the bolt's counterbore versus the counterbore on the trimmer. Do not install any attachment on any trimmer without a solid, secure fit of all parts.
ATTENTION DEALERS: Install heads only on trimmers that are within the size range (cc displacement or horsepower) for which the head is intended. Performance will suffer if the type of head and the size of trimmer are not properly matched. Read and follow all of the Important Safety Information.

F = Female • **M** = Male • **LH** = Left-hand • **RH** = Right-hand • **CB** = Counterbore

*order 55-265 for 450 LH Speed Feed

Trimmer Head Application Chart

Model Numbers & Mounting Bolts	HD Commercial Bump & Feed	HD Commercial Bump & Feed (Eyelet Load)	Bump & Feed	Bump & Feed (Eyelet Load)	4" Heavy-Duty Magnum Gator-head™	2–Line Speed Feed 3.75" LH	Lightning Load™ Bump & Feed 4.25" LH	Lightning Load Bump & Feed 5.00" LH	Cool Head Bump & Feed 4.50" RH	Cool Head Bump & Feed 6.00" LH
Maruyama										
BC430DWM, BC440DWM, 32, 35, BC500										
10mm x 1.25 LHM					55-140-0	55-294*	55-989	55-990		
BC220DL, BC221DL										
7mm x 1.0 LHM	55-987	55-984		55-985	55-140-0	55-294*	55-989	55-990		55-992
BC184C, BC200C, BC201C, BC260C, BC260CB										
8mm x 1.25 RHM										
BT17, BT220, BC200C, BC260C										
8mm x 1.25 RHF										
23										
10mm x 1.5 LHF										
BC184C, BC200C, BC260C										
10mm x 1.25 LHF	55-987	55-984	55-983	55-985	55-140-0	55-294*	55-989	55-990		55-992
McCulloch										
80A, 80S, 80-SL, 80-SX, 85-SL;MAC100A, MAC 85A, MAC 85S, MAC 85SX, MAC 2825, MAC 2827; PRO MAC SERIES: I-SX, II, II SUP, IV HD, 2320L, 2035, 2045, 138SJ, 138SL, EB SERIES: I, I-SL, I-SX, II, II-SL, II-SX, III-SL, III-SX, EB285BC, EB287BC; MAC SERIES: 60, 60A, 60S, 60SX, 65, 65SL, 70, 70A, 75, 80, SEB I-SX SPECIAL, SEB II-S, SEB III-S, SILVER EAGLE 28, SILVER EAGLE 28C, SILVER EAGLE 32BC, SUPER EBI-S, TITAN 2100, TITAN 2200, 2510; ROADRUNNER, ROADRUNNER II, ROADRUNNER III, ROADRUNNER SL										
3/8-24 RHF	55-032-1			55-986					55-991	
TITAN SERIES 2130/2500/2500AV/2560/2565, /2300/2300AV, All Proscape Models EB SERIES: 32BCS, 35L, 280, 282, 285BCS, 297BCS, 325BC, 327BC, 2815, 2816, 2817, 2818, 2845, 3225, 3225HD, 3227, 3227HD, EB III, EB IV, EB IV SL; MAC SESRIES:38AV, 85A, 90, 90A, 95, 95A, 99A, 99-SL, 100A, 100AHD, 100HD, 3225, 3227, 3225HD, 3227HD; PRO MAC SERIES: III, III SUP, IV SUP, 4HD 2335J. 2635B, 2635J, 3335L, SILVER EAGLE 32 BCS; SUPMAC 100A; TITAN SERIES: 2300, 2300AV, 2310, 2360, 2400, 2500, 2500AV, 2560AV, 2565AV, 3000, 3900, 4335B; PROSCAPER SERIES: I-S, II, IIHD, III, IV, V, PS1, PS2, PS3, PS4, PS5, 28S, 32HD, 32HDS; SEB IV, SILVER EAGLE 32 BC DLX, 85A, 85S/SL/SX, EB35L, EB3SX, SEB4										
10mm x 1.25 LHF	55-987	55-984	55-983	55-985	55-140-0					55-992
60SX, 65, 65SL, 80SX, 80SL, EB280, EB285, EBISX, EB282, EB287, Mac 15RT, Mac 2815, Mac 2816, Mac 2817, Mac 2818, Road Runner, Road Runner II, Road Runner III, Pro Mac I, SE28, SE28c, Titan 2000, Titan 2010, Titan 2100, Titan 2200, MAC 15RT/2815/2816/2817/2818, PROMAC1, SE28, SE28C, TITAN2000/2010/2100/2200, ALL ROAD RUNNER MODELS Extended spindle										
		55-095-1	55-981							
MAC 57, MAC 90, MAC 95, MAC 100A, MAC 32, MAC37										
10mm x 1.25 LHM					55-140-0	55-294*	55-989	55-990		
SUPERMAC26, MAC30A/30AV, PRATER30, EUROPA92/35A, EUROPA, MS24/52, MS52, PROMAC38AV, BP38AV, WINDSORKIT26, VERSAILLE38, BP26AV, BP35AV										
10mm x 1.5 LHM										
MAC22/23/30A, SUPERMAC30AV, MS33, DELTA, 38AV, MS33, MS40, BP30AV, TD2400/3300/4000										
8mm x 1.25 LHM	55-987	55-984	55-983	55-985	55-140-0	55-294*	55-989	55-990		55-992
MAC17, MAC25										
8mm x 1.25 RHF										
SERIES 10 BRUSHCUTTER										
3/8-24 LHF										
Mitsubishi										
K20M-T12, MB160A, MB180, MB200, MB6A, MV130										
8mm x 1.25 LHF					55-140-0	55-294*	55-989	55-990		

T

Trimmer Head Application Chart

Model Numbers & Mounting Bolts	HD Commercial Bump & Feed	HD Commercial Bump & Feed (Eyelet Load)	Bump & Feed	Bump & Feed (Eyelet Load)	4" Heavy-Duty Magnum Gator-head™	2–Line Speed Feed 3.75" LH	Lightning Load™ Bump & Feed 4.25" LH	Lightning Load Bump & Feed 5.00" LH	Cool Head Bump & Feed 4.50" RH	Cool Head Bump & Feed 6.00" LH
Mountfield										
16, 18, 22, 23, 24, 26, 33, 40, 43										
8mm x 1.25 LHM	55-987	55-984	55-983	55-985	55-140-0	55-294*	55-989	55-990		55-992
31, 37										
10mm x 1.25 LHM					55-140-0	55-294*	55-989	55-990		
Nikkari										
22, 24, 37, SDX20, RK521, TDK518,										
8mm x 1.25 LHM	55-987	55-984	55-983	55-985	55-140-0	55-294*	55-989	55-990		55-992
33, PNB522, TX(B)508, NBA524, SXD40, FSK514										
10mm x 1.25 LHM					55-140-0	55-294*	55-989	55-990		
MTD Pro										
ST23, ST26, ST35										
10mm x 1.25 LHF	55-987	55-984	55-983	55-985	55-140-0	55-294*	55-989	55-990		55-992
Olympyk										
OL8740BAV, OL8742BAV, OL8750PRO, OL8753BAV, OL88510BAV, PRO-38, OL8735LAV, 727S, 727T, 733S, 733T, 740S, 740T, 433BP, B200, B220, B260L, B220L, B220S, B260, B300, B320, B400, B420, B450, B460, OL8260BAV, OL8260DAV, OL8260LAV, OL8260TA, OL8350BAV, OL8350LAV, OL8450BP, OL8460BAV, OL8725BAV, OL8725LAV, OL8726TA, OL8735BAV,										
8mm x 1.25 LHM	55-987	55-984	55-983	55-985	55-140-0	55-294*	55-989	55-990		55-992
900, 2620										
10mm x 1.5 LHF										
440, 433BP, 200, 220, 260, 300, 400, 310, 410, 8420, 727 D/C/S/T, 733 S/T, 740 S/T, 433BP, 440BP, 750 S/T										
8mm x 1.25 LHF					55-140-0	55-294*	55-989	55-990		
Paice Setter										
K20, KQ, KLQ, JQ										
8mm x 1.25 LHF					55-140-0					
J40D, KQ30										
10mm x 1.25 LHF	55-987	55-984	55-983	55-985	55-140-0	55-294*	55-989	55-990		55-992
Paramount										
PLT2651, PLT2857, PT140, PT140-2, PT145, PT160, PT162, PT162-01, PT1400, PT1400-00, SK140-02, SK145, SK160-02, SK165										
3/8-24 RHF	55-032-1			55-986					55-991	
PLT2145, PLT2248										
5/16 x 24, RHF										
Pioneer/Partner										
B180, B250, Spartan										
8mm x 1.25 LHM	55-987	55-984	55-983	55-985	55-140-0	55-294*	55-989	55-990		55-992

WARNING: Improperly installed trimmer attachments can create a risk of personal injury to the trimmer operator or bystanders. Improperly installed attachments can work loose and be thrown off the trimmer. In some cases, mounting bolts may not securely fit all intended trimmer models, for example: there may be a difference in the size of the bolt's counterbore versus the counterbore on the trimmer. Do not install any attachment on any trimmer without a solid, secure fit of all parts.
ATTENTION DEALERS: Install heads only on trimmers that are within the size range (cc displacement or horsepower) for which the head is intended. Performance will suffer if the type of head and the size of trimmer are not properly matched. Read and follow all of the Important Safety Information.

F = Female • **M** = Male • **LH** = Left-hand • **RH** = Right-hand • **CB** = Counterbore

*order 55-265 for 450 LH Speed Feed

Trimmer Head Application Chart

Model Numbers & Mounting Bolts	HD Commercial Bump & Feed	HD Commercial Bump & Feed (Eyelet Load)	Bump & Feed	Bump & Feed (Eyelet Load)	4" Heavy-Duty Magnum Gator-head™	2–Line Speed Feed 3.75" LH	Lightning Load™ Bump & Feed 4.25" LH	Lightning Load Bump & Feed 5.00" LH	Cool Head Bump & Feed 4.50" RH	Cool Head Bump & Feed 6.00" LH
Pioneer/Partner										
F15, F16, S16, S24, SF24, B25SCC, S33, S41, S51										
8mm x 1.25 LHF					55-140-0	55-294*	55-989	55-990		
B380, B440										
12mm x 1.75 LHF										
200, 205, B250C/V, T250, S33, S41, S51										
10mm x 1.25 LHF	55-987	55-984	55-983	55-985	55-140-0	55-294*	55-989	55-990		55-992
B180, B370, B450										
12mm x 1.75 LHF										
B400										
10mm x 1.0 LHF	55-987		55-038-1	55-985	55-140-0					
200, 205, B250C, B250V, T250 (EURO)										
8mm x 1.25 LHM	55-987	55-984	55-983	55-985	55-140-0	55-294*	55-989	55-990		55-992
Poulan Pro/Poulan										
770, PPC22, PPC25, PPC25E, PPC32; PRO SERIES: 111, 112, 114, 113, 115, 117, 559, 609, 900, 1350, 1500, 2400, 2500, 2600, 2610, 2620, 2615, 2700, PRO114, PRO117; YARD PRO SERIES: 115, 120A, 130A, 145, 160, 200										
3/8-24 RHF	55-032-1			55-986					55-991	
150, 200, 800, 900, 2620, 2820										
10mm x 1.5 LHF										
165, 175, 185, 200, 195, 800, 900, 2620, 2820										
3/8-24 LHF										
Red Max										
BC220DL, BC221DL, BC300DL, BC2300DL, BK235FL, BK345FL, BK435FL, BK530DL, BC17, BC23, BC32, BC240DL										
7mm x 1.0 LHM	55-987	55-984		55-985	55-140-0	55-294*	55-989	55-990		55-992
BC260DL, BC262DL, BC261DL, BC340DL, BC341DL, BC342DL, BC430DWM, BC440DWM, BC2600DL, BK 346FL/245FLK/436FL, BC 254A/260DM/260DMU/340DWM/340FW/431DWM, BCD20, BCF01G2KC, BC 3400DW/4400DW, BCX2600DS, BCZ 2500S/2500SU/2500SW/2500BC										
8mm x 1.25 LHM	55-987	55-984	55-983	55-985	55-140-0	55-294*	55-989	55-990		55-992
BC430, BC440, BC441DWM, BC442/531/2DWM										
10mm x 1.25 LHM					55-140-0	55-294*	55-989	55-990		
BT17, BT25, BT20, BT20, BT2201F										
8mm x 1.25 RHF										
BC2000DL, BC200BT2000, BT2001DL										
10mm x 1.25 LHF	55-987	55-984	55-983	55-985	55-140-0	55-294*	55-989	55-990		55-992
BC431FWM, BC531DWM, FBC22, FBC26										
10mm x 1.25 LHM					55-140-0	55-294*	55-989	55-990		
Robin										
NB23, NBF171, NFB251, NB26										
10mm x 1.0 LHCB		55-984	55-039-1			55-294*	55-989	55-990		

T

Trimmer Head Application Chart

Model Numbers & Mounting Bolts	HD Commercial Bump & Feed	HD Commercial Bump & Feed (Eyelet Load)	Bump & Feed	Bump & Feed (Eyelet Load)	4" Heavy-Duty Magnum Gator-head™	2–Line Speed Feed 3.75" LH	Lightning Load™ Bump & Feed 4.25" LH	Lightning Load Bump & Feed 5.00" LH	Cool Head Bump & Feed 4.50" RH	Cool Head Bump & Feed 6.00" LH
Robin										
NB02, NB02T, NB03, NB02-3A, NB02TM NB03M NB16, NB16F, NB16S, NB16T, NB20T, NB26, NB27, NB27AU, NB31, NB31-AU, NB211, NB211S, NB223, NB231, NB253, NB281, NB281-AU, TNB211/231, NBF16F, NBT415, MB26AV, MB31AV, NB16T, NB23, NB31, NB30K, NB31, NBK411, NBT20T, NBT27, NB27AU, NB31AU, NB16F, NB23F/S, NBF231, NBF251, NBF171, NBANB23TX										
8mm x 1.25 LHF					55-140-0	55-294*	55-989	55-990		
NB04, NB04-2D, NB30, NB50, NB50L, NB321, NB321-AU, NB351, NB411, NB415, NB2001, NBKT415										
10mm x 1.0 LHF	55-987		55-038-1	55-985	55-140-0	55-294*	55-989	55-990		
NB23TX, NB252, NBF251-2										
8mm x 1.25 RHF										
NBR-30(K) 40, NB351(Z)										
8mm x 1.25 LHM	55-987	55-984	55-983	55-985	55-140-0	55-294*	55-989	55-990		55-992
Ryobi/Ryan/IDC										
120, 130, 260, 261, 262, 263, 264, 264-1, 264-2, 264-3, 265, 265-1, 265-P, 270, 280, 364, 364-1, 365, 500, 700, 700R										
274, 274-2, 274-3, 275, 275-1, 275-P.520, 520-1, 520-2, 720R, 760R, 764R, 770R, 960R										
3/8-24 RHF	55-032-1			55-986					55-991	
284, 284-1, 284-2, 284-3, 285, 285-1, 285-P, 540, 540-1, 540-2, 580, 580-1, 580-2, 740R, 780R, 7890R, 865R, 885R, 990R, 740R-1, 750R, 775R, 780R-1, 780RB, 780RE, 840R										
10mm x 1.25 LHF	55-987	55-984	55-983	55-985	55-140-0	55-294*	55-989	55-990		55-992
790R BEFORE 1996										
10mm x 1.5 LHM										
RD180K, REK285BP, 108KS/S, 3318										
8mm x 1.25 LHM	55-987	55-984	55-983	55-985	55-140-0	55-294*	55-989	55-990		55-992
RD5224, RD5225, RSB2801, RSH1100										
10mm x 1.25 LHM					55-140-0	55-294*	55-989	55-990		
RD260										
10mm x 1.5 LHF										
RD3318, RD1605, RD2414, RD3818, RD3330, RD430, RD520										
8mm x 1.25 LHF					55-140-0	55-294*	55-989	55-990		
ALL CORDED ELECTRIC MODELS										
									55-413	
Sabo										
23-700										
7mm x 1.0 LHM	55-987	55-984		55-985	55-140-0	55-294*	55-989	55-990		55-992

WARNING: Improperly installed trimmer attachments can create a risk of personal injury to the trimmer operator or bystanders. Improperly installed attachments can work loose and be thrown off the trimmer. In some cases, mounting bolts may not securely fit all intended trimmer models, for example: there may be a difference in the size of the bolt's counterbore versus the counterbore on the trimmer. Do not install any attachment on any trimmer without a solid, secure fit of all parts.
ATTENTION DEALERS: Install heads only on trimmers that are within the size range (cc displacement or horsepower) for which the head is intended. Performance will suffer if the type of head and the size of trimmer are not properly matched. Read and follow all of the Important Safety Information.

F = Female • **M** = Male • **LH** = Left-hand • **RH** = Right-hand • **CB** = Counterbore

*order 55-265 for 450 LH Speed Feed

Trimmer Head Application Chart

Model Numbers & Mounting Bolts	HD Commercial Bump & Feed	HD Commercial Bump & Feed (Eyelet Load)	Bump & Feed	Bump & Feed (Eyelet Load)	4" Heavy-Duty Magnum Gator-head™	2–Line Speed Feed 3.75" LH	Lightning Load™ Bump & Feed 4.25" LH	Lightning Load Bump & Feed 5.00" LH	Cool Head Bump & Feed 4.50" RH	Cool Head Bump & Feed 6.00" LH
Sabo										
26-1500, 26-1700										
10mm x 1.25 LHM					55-140-0	55-294*	55-989	55-990		
Sabre										
B25, S25, S25C										
8mm x 1.25 LHM	55-987	55-984	55-983	55-985	55-140-0	55-294*	55-989	55-990		55-992
Sears										
PRO SERIES, 79534, 79541, 79542, 79551, 79552, 79555, 79556, 79561, 79565, 7957, 7958, 7959, 79611, 79612, 79612, 79613, 79614, 79615, 79619, 79621, 7968, 7969, 79717, 79719, 79812, 79813, 79814, 79819, 79532, 79853, 79854, 79855, 79857, 636-79545, 636-7955, 636-79558, 636-796233, 796234M, 796242, 796243										
10mm x 1.0 LHF	55-987		55-038-1	55-985	55-140-0	55-294*	55-989	55-990		
21851-2816, 9-89658LS, 979551C, 79011, 79500, 79501, 79504, 79522										
10mm x 1.25 LHF	55-987	55-984	55-983	55-985	55-140-0	55-294*	55-989	55-990		55-992
79606, 79531, 79821, 742110, 742111, 74212, 79823, 74213, 797100, 79711, 79712, 79713, 79715, 79718, 79721, 79726, 79714, 79716, 79725, 79727, 79816										
3/8-24 RHF	55-032-1			55-986					55-991	
74220, 74224, 74234, 74242, 74244, 74247, 79505, 79530, 79626, 79821										
3/8-24 LHF										
74131, 79605										
49534C										
10mm x 1.25 LHM					55-140-0	55-294*	55-989	55-990		
74110, 74121, 74125										
8mm x 1.25 LHF					55-140-0	55-294*	55-989	55-990		
Servistar										
385SSR, 395SSR										
10mm x 1.25 LHF	55-987	55-984	55-983	55-985	55-140-0	55-294*	55-989	55-990		55-992
365SSR, 375SSR										
5/16 x 18 RHM										
Shindaiwa										
LT18, T18, LT20, C20, T20, T20A, T35, T230, T230S, T230XR, C230, DYB201/202/231/232, T23E, T195, T220, T222, T242, T242X, T2510X										
7mm x 1.0 LHM	55-987	55-984	55-983	55-985	55-140-0	55-294*	55-989	55-990		55-992
BP-35, BP-45, C-25, C-27, C250, F-20, R-20, R-25, R-35, T-25, T-27, T-250, T-260, T261, T261B, T261XR, T261XB, T-270, T272, T272X, T282, T282X, T300, T3410, T3410X, T-350, YARDWARE 220, VP35, P18, P21, C23										
8mm x 1.25 LHM	55-987	55-984	55-983	55-985	55-140-0	55-294*	55-989	55-990		55-992
B35, BP35, B40, B45, B450, BP45, RC45, C35, T350										
10mm x 1.25 LHM					55-140-0	55-294*	55-989	55-990		
Shingu										
S20, G1823E, G1823DE, G2523E, G2523DE, PK2325E, PK2326DE, PG3330DD, PK4035DD, PK4845DD, 650, P750, P850										
8mm x 1.25 LHM	55-987	55-984	55-983	55-985	55-140-0	55-294*	55-989	55-990		55-992
200, 250, 350, S22PNC, S23PNC										
7mm x 1.0 LHM	55-987	55-984	55-983	55-985	55-140-0	55-294*	55-989	55-990		55-992

T

Trimmer Head Application Chart

Model Numbers & Mounting Bolts	HD Commercial Bump & Feed	HD Commercial Bump & Feed (Eyelet Load)	Bump & Feed	Bump & Feed (Eyelet Load)	4" Heavy-Duty Magnum Gator-head™	2–Line Speed Feed 3.75" LH	Lightning Load™ Bump & Feed 4.25" LH	Lightning Load Bump & Feed 5.00" LH	Cool Head Bump & Feed 4.50" RH	Cool Head Bump & Feed 6.00" LH
Shingu										
PK4036DD, PK4846DD										
10mm x 1.5 LHM										
Shingushoko										
200, 250, 350, K301										
7mm x 1.0 LHM	55-987	55-984	55-983	55-985	55-140-0	55-294*	55-989	55-990		55-992
600, 650, 700, P750, P850										
8mm x 1.25 LHM	55-987	55-984	55-983	55-985	55-140-0	55-294*	55-989	55-990		55-992
Singer										
GBC2818										
8mm x 1.25 LHF					55-140-0	55-294*	55-989	55-990		
Snapper										
212, 212CST, 213, 213CST, 214, 214 DCST, P212CST, P212LST										
3/8-24 RHF	55-032-1			55-986					55-991	
210SS, 211SS, 211SST, 215ORI, 215SST, 240SS, 240SST, 245SST, 245ORT, 310, 311, 311S, 410, 411SST, 415ORT, 2101SST, PL212LST, 414 SST, 211SST, 212CST, 214DCST, SSTBC, SST2111, SST2401, SST7111, 410, 410SST										
10mm x 1.25 LHF	55-987	55-984	55-983	55-985	55-140-0	55-294*	55-989	55-990		55-992
Solo										
123, 125, MULTIMOT										
10mm x 1.0 LHF	55-987		55-038-1	55-985	55-140-0	55-294*	55-989	55-990		
014, 100, 130S, 400, S100 & S400, FS136, FS135, 119, 115, 118										
10mm x 1.25 LHF	55-987	55-984	55-983	55-985	55-140-0	55-294*	55-989	55-990		55-992
130, 120, 122, 124, 126, 135, 140, 200, 300, 400, S200, S300, FS125, S200, S300, SKM124, SKM126, 134, 137, 127, 141, FS126, 128										
12mm x 1.5 LHF										
9										
10mm x 1.5 LHM										
21, 127S										
10mm x 1.5 LHF										
Stihl										
FS50, FS50E FS50F, FS51, FS51AVE, FS55, FS55R, FS60, FS61, FS61AE, FS61E, FS65, FS65AVE, FS65AVRE, FS80E, FS80RE, FS86, FS90, FS90AVE, FS91, FS96, FS85R/RT, FS83, FS83R/RT										
8mm x 1.25 LHF		55-985			55-140-0	55-294*	55-989	55-990		
FS66AVRE, FS74, FS74AVE, FS74AVRE, FS76, FS76AVE, FS76AVRE, FS81, FS81AVE, FS81AVRE, FS83, FS83R, FS85R, FS85RT, FS86, FR106, FR108, FS40, FS44, FS44B, FS44J, FSS44R, FS45,FS46, FS48, FS52, FS52AVE, FSAVRE, FS56, FS56AVRE, FS62, FS62AVE, FS62AVRE, FS66, FS66AVE, FS86AVE, FS400, FS86AVRE, FS88, FS96, FS100, FS106, FS106AVE, FS108, FS110, FS120, FS120R,FS130, FS200, FS200R, FS250, FS350, FS450K, FS550, FS550K										
10mm x 1.0 LHF	55-987		55-038-1	55-985	55-140-0	55-294*	55-989	55-990		

WARNING: Improperly installed trimmer attachments can create a risk of personal injury to the trimmer operator or bystanders. Improperly installed attachments can work loose and be thrown off the trimmer. In some cases, mounting bolts may not securely fit all intended trimmer models, for example: there may be a difference in the size of the bolt's counterbore versus the counterbore on the trimmer. Do not install any attachment on any trimmer without a solid, secure fit of all parts.
ATTENTION DEALERS: Install heads only on trimmers that are within the size range (cc displacement or horsepower) for which the head is intended. Performance will suffer if the type of head and the size of trimmer are not properly matched. Read and follow all of the Important Safety Information.

F = Female • **M** = Male • **LH** = Left-hand • **RH** = Right-hand • **CB** = Counterbore

*order 55-265 for 450 LH Speed Feed

Trimmer Head Application Chart

Model Numbers & Mounting Bolts	HD Commercial Bump & Feed	HD Commercial Bump & Feed (Eyelet Load)	Bump & Feed	Bump & Feed (Eyelet Load)	4" Heavy-Duty Magnum Gator-head™	2–Line Speed Feed 3.75" LH	Lightning Load™ Bump & Feed 4.25" LH	Lightning Load Bump & Feed 5.00" LH	Cool Head Bump & Feed 4.50" RH	Cool Head Bump & Feed 6.00" LH
Stihl										
FS45, FS46										
Extended spindle										
Older FS curved-shaft trimmers and most FE electric trimmers										
Extended spindle										
FS08, FS20, FS150, FS151, FS160, FS180, FS200, FS200AVSE, FS202, FS220AV/AVSE, FS280, FS280K, FS340, FS353AV, FS360, FS410AVE, FS420, FS120, FS120R, FS250, FS250R, FS200R, FS350, FS450KFS550										
12mm x 1.5 LHF										
TAS										
HD180, Parlander, SUM301, SUM7000, TBC23, TBC232, TBC262, TBC265, TBC30, TBC301, TBC322, TBC355, TBC373, TBC422, TBC501										
8mm x 1.25 LHM	55-987	55-984	55-983	55-985	55-140-0	55-294*	55-989	55-990		55-992
QUM2, SUM3										
10mm x 1.25 LHF	55-987	55-984	55-983	55-985	55-140-0	55-294*	55-989	55-990		55-992
TBC23, TBC23F, TBC30, TB16, TB160, TBC202, TBC205, TBC215										
8mm x 1.25 LHF					55-140-0	55-294*	55-989	55-990		
TMC										
1800, 2400, 3300, 3350										
8mm x 1.25 LHM	55-987	55-984	55-983	55-985	55-140-0	55-294*	55-989	55-990		55-992
TML										
2856										
8mm x 1.25 LHM	55-987	55-984	55-983	55-985	55-140-0	55-294*	55-989	55-990		55-992
Tanaka										
218, 220E, 233, 301, 321, AST-210, AST 7000, SUM-301, SUM-321; TBC SERIES: TBC-162, TBC-205, TBC-215, TBC218, TBC-220, TBC-220SS, TBC-232, TBC233, TBC-240, TBC-250, TBC-262, TBC-265, TBC-270PF, TBC-300, TBC301, TBC321 TBC-322, TBC-325, TBC-355, TBC-373, TBC-400, TBC-420PF, TBC-422, TBC-422C, TBC-425, TBC-500, TBC-501, TBC-2100, TBC-2110, TBC-2211, TBC-2510, TBC-2800, TBC-3010, TBC-4500, TBC-4501, TST-218, TST-501, AST7000, TUM220, TBC265SDH, TBC2000/2200, AST250, TUM250, SUM250, SUM500/351, SUM421, SUM301, SUM7000, SUM400, 2000, 265SDH, 300SDH, 355SDH, 422SDH, 500SDH, TBC2000N										
8mm x 1.25 LHM	55-987	55-984	55-983	55-985	55-140-0	55-294*	55-989	55-990		55-992
TBC2100, TBC200										
3/8-24 RHF	55-032-1			55-986					55-991	
TBC4000, TBC2110, SUM3										
10mm x 1.25 LHF	55-987	55-984	55-983	55-985	55-140-0	55-294*	55-989	55-990		55-992
AST-5000, AST-7000S. TBC-4000, TBC-4110, TBC-5000										
8mm x 1.25 RHF										
TBC-160, TBC-202, TBC-210, TC-1600, TST218, TBC160, TBC162, TBC202, TBC205, TBC210, TC1600, TBC215, 202 84 MODEL										
8mm x 1.25 LHF					55-140-0	55-294*	55-989	55-990		
Tondu										
S100, S250, 260, 350										
7mm x 1.0 LHM	55-987	55-984		55-985	55-140-0	55-294*	55-989	55-990		55-992
PRO850, PRO255, PRO851										
8mm x 1.25 LHM	55-987	55-984	55-983	55-985	55-140-0	55-294*	55-989	55-990		55-992

T

Trimmer Head Application Chart

Model Numbers & Mounting Bolts	HD Commercial Bump & Feed	HD Commercial Bump & Feed (Eyelet Load)	Bump & Feed	Bump & Feed (Eyelet Load)	4" Heavy-Duty Magnum Gator-head™	2–Line Speed Feed 3.75" LH	Lightning Load™ Bump & Feed 4.25" LH	Lightning Load Bump & Feed 5.00" LH	Cool Head Bump & Feed 4.50" RH	Cool Head Bump & Feed 6.00" LH
Toro										
1000, 2000, 30900, 30901, 30920, 51628, 51641, 51645, 51650, 51660, 51918, CL700, CL2100, CL30900, CL30901, CL30920, TC300, TC350, TC400, TC600, TC650, TC700, TC800, TC1000, TC2000, TC2100, TC3000, TC3100, TC3500, TC4000, TC5000										
10mm x 1.25 LHF	55-987	55-984	55-983	55-985	55-140-0	55-294*	55-989	55-990		55-992
TC1000, TC2000										
3/8-24 RHF	55-032-1			55-986					55-991	
51903, 51904, 51907, 51906, 51911, 51912, 51916, 51917, 51920, 51921, 51926, 51927, 51450, 51620, 51638										
Turf Power										
740TP, 780TP										
10mm x 1.25 LHF	55-987	55-984	55-983	55-985	55-140-0	55-294*	55-989	55-990		55-992
700TP, 720TP, 764TP										
Weedeater										
650, 657, 670, 707, 978, 979, 3500, XR95										
7/16-20 RHF										
609, 1000, GTI19/T, XR90/95/100/105/125/200, YP140/160/200, YARDPRO 200, PRO SERIES 100, 105, 150, 195, 200, YP130, AYP140										
10mm x 1.5 LHF										
115, 117; PRO TRIM, ULTRA TRIM, WEEDY 2215, XR SERIES: 20, 20T, 30, 50, 50A 50S, 70, 75, 80, 80A, 85, 125; XT SERIES: 20, 35, 50T, 80, 85, 100, 125, 125B, 165, 175, 185, 195, 500, 507, 559, 587, 599, 600, 607, 608, 609, 1400, 1400T, 1500, 1600, 1600T, 1700, 1700A, 1740, 3500, GTI15, 85T; YARD PRO SESRIES: 110, 115, 116, 120, 120A, 130, 130A, 145, GTI15-T, GTI16, GTI17C, GTI17T, GTI18, GTI18KT, GTI18T, GTI19, GTI52, GTI SUPER 16, PRO-LITE, PRO-LITE PLUS, PRO SERIES: 111, 112, 114, 115, 117 , 175										
3/8-24 RHF	55-032-1			55-986					55-991	
GTI19T, HP305B, HP305BP, TBP57, XT50, XT90, XT100, XT125, XT125B, XT125KT, XT125T, XT125TR, YARD PRO 105, YARD PRO 140, 165, 175, 185, 195, (STRAIGHT SHAFT), GT119, XR125, XT20, XT50, XT85, HP30SBP, TBC57, HP30SB, YP105										
3/8-24 LHF										
PRO37										
10mm x 1.25 LHM					55-140-0	55-294*	55-989	55-990		
599, 22 (EUROPE)										
8mm x 1.25 LHM	55-987	55-984	55-983	55-985	55-140-0	55-294*	55-989	55-990		55-992
GT115T-17C/XT, 20T-40/HP, 22-22T, ALL CURVED SHAFTS, ALL FEATHER-LITE UNITS										

T

WARNING: Improperly installed trimmer attachments can create a risk of personal injury to the trimmer operator or bystanders. Improperly installed attachments can work loose and be thrown off the trimmer. In some cases, mounting bolts may not securely fit all intended trimmer models, for example: there may be a difference in the size of the bolt's counterbore versus the counterbore on the trimmer. Do not install any attachment on any trimmer without a solid, secure fit of all parts.
ATTENTION DEALERS: Install heads only on trimmers that are within the size range (cc displacement or horsepower) for which the head is intended. Performance will suffer if the type of head and the size of trimmer are not properly matched. Read and follow all of the Important Safety Information.

F = Female • **M** = Male • **LH** = Left-hand • **RH** = Right-hand • **CB** = Counterbore

*order 55-265 for 450 LH Speed Feed

Trimmer Head Application Chart

Model Numbers & Mounting Bolts	HD Commercial Bump & Feed	HD Commercial Bump & Feed (Eyelet Load)	Bump & Feed	Bump & Feed (Eyelet Load)	4" Heavy-Duty Magnum Gator-head™	2–Line Speed Feed 3.75" LH	Lightning Load™ Bump & Feed 4.25" LH	Lightning Load Bump & Feed 5.00" LH	Cool Head Bump & Feed 4.50" RH	Cool Head Bump & Feed 6.00" LH
Westmac										
16, 23, 31										
8mm x 1.25 LHM	55-987	55-984	55-983	55-985	55-140-0	55-294*	55-989	55-990		55-992
35, 40, 50, 68										
10mm x 1.0 LHF	55-987		55-038-1	55-985	55-140-0	55-294*	55-989	55-990		
19S, 33S										
8mm x 1.25 LHF					55-140-0	55-294*	55-989	55-990		
RS40, RS45										
12mm x 1.75 LHF										
Windmill										
B40, C35, X3335G										
10mm x 1.25 LHM					55-140-0	55-294*	55-989	55-990		
AM SERIES										
8mm x 1.25 LHM	55-987	55-984	55-983	55-985	55-140-0	55-294*	55-989	55-990		55-992
Vandermolen										
L1840F, L1840G, L1845E, L1845G, L2035G, L2415E, L2415G, X184SE, X185SE, X1845G, X2415E, X2415G, X3335E, X3335G										
10mm x 1.25 LHF	55-987	55-984	55-983	55-985	56-140	55-294*	55-989	55-990		55-992
L3335G										
8mm x 1.25 LHM	55-987	55-984	55-983	55-985	55-140-0	55-294*	55-989	55-990		55-992
Xenoa										
FDC26, FBC12, BC15										
8mm x 1.25 LHM	55-987	55-984	55-983	55-985	55-140-0	55-294*	55-989	55-990		55-992
BCD										
7mm x 1.0 LHM	55-987	55-984	55-983	55-985	55-140-0	55-294*	55-989	55-990		55-992
FBC33										
10mm x 1.25 LHM					55-140-0	55-294*	55-989	55-990		
Yamaha										
YBC20D, YBC30D, YBC40D										
8mm x 1.25 LHM	55-987	55-984	55-983	55-985	55-140-0	55-294*	55-989	55-990	55-413	55-406-0
YBC50D										
10mm x 1.25 LHM					55-140-0	55-294*	55-989	55-990	55-413	55-406-0
Yazoo										
TBC31, YBC16, YBC23, YBC31										
8mm x 1.25 LHM	55-987	55-984	55-983	55-985	55-140-0	55-294*	55-989	55-990		55-992

T

Trimmers - Brush Cutter Blades

Grass & Brush Blades

- Made of Swedish steel to exceed international standards for durability and safety.
- Ground edge can be easily re-sharpened with standard saw chain files.
- Grass and brush blades include a 20 mm reducer bushing for easy mounting on .75" arbors.
- 3 and 4 tooth blades are reversible.

All Oregon® grass-and-brush blades and clearing-saw blades are rated to 13,000 RPM and they are so stamped. However, Oregon recommends that these blades SHOULD NOT be installed on any brushcutter capable of spinning the blade faster than 10,000 RPM.

OREGON	Blade Dia.	Hole Dia.	Bushing	Thickness	Teeth	Product Code
Use for cutting and clearing heavy weeds and underbrush						
41-920	10"	1"	20 mm	2.25 mm	3	
41-921	12"	1"	20 mm	2.25 mm	3	
Use for cutting grass and weeds						
41-922	8"	1"	20 mm	1.5 mm	4	
41-923	9"	1"	20 mm	1.5 mm	4	
Use for cutting grass and weeds						
41-924	8"	1"	20 mm	1.5 mm	8	
41-925	9"	1"	20 mm	1.8 mm	8	

3-Tooth Grass & Brush Blades

- Patented design
- Creates airlift to remove debries out of the way of the cutter
- Self-sharpening cutting edge
- Reduces engine drag

OREGON	Blade Dia.	Hole Dia.	Bushing	Thickness	Teeth	Product Code
41-938	10"	1"	20 mm	4 mm	3	
41-939	12"	1"	20 mm	4 mm	3	

Clearing Saw Blades

- Made of Swedish steel to exceed international standards for durability and safety
- Ground edge can be easily re-sharpened with standard saw chain files

All Oregon grass-and-brush blades and clearing-saw blades are rated to 13,000 RPM and they are so stamped. However, Oregon recommends that these blades SHOULD NOT be installed on any brush cutter capable of spinning the blade faster than 10,000 RPM

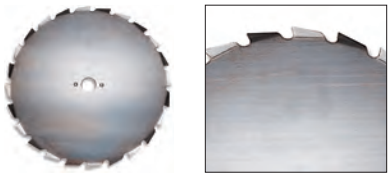

OREGON	Series	Blade Dia.	Hole Dia.	Thickness	Teeth	Product Code
Recommended for straight-shaft trimmers of 24cc and larger						
41-926	XRT	8"	.75"	1.5 mm	20	
41-927	XRT	8"	1.0"	1.5 mm	20	
41-928	XRT	9"	.75"	1.8 mm	22	
41-929	XRT	9"	1.0"	1.8 mm	22	
Recommended for straight-shaft trimmers of 30cc and larger						
41-930	EIA	8"	.75"	1.5 mm	22	
41-931	EIA	8"	1.0"	1.5 mm	22	
41-932	EIA	9"	.75"	1.8 mm	24	
41-933	EIA	9"	1.0"	1.8 mm	24	
Recommended for straight- shaft trimmers of 40cc and larger						
41-935	MAXI	8"	1.0"	1.5 mm	22	
41-936	MAXI	9"	.75"	1.8 mm	24	
41-937	MAXI	9"	1.0"	1.8 mm	24	

OREGON	Description	Product Code

Filing Tools for Brushcutter Blades

40458

Round File - 7/32"
Use to sharpen XRT, EIA, & MAXI series clearing saw blades (2-pack)
Was Oregon® 57-466

12211

Flat File
Use to sharpen 3, 4, & 8 tooth grass & brush blades. Use with Oregon 57-505 to set the depth gauges on XRT series blades (12-pack)
Was Oregon 57-465

31686

Assembled File Guide - 7/32"
Use with 7/32" round file on XRT, EIA, & MAXI series blades to assure uniform sharpening of each tooth **Includes one round file, frame, & wooden handle**
Holds file securely
Was Oregon 57-504

T

NOTE: Easy to follow Instructions for sharpening blades are included on the inside cover of each brush cutter blade package.

Trimmer / Blower Parts

OREGON	Replaces	Description	Product Code

Echo

30-439-1	A226000031	**Air Filter** Fits PB603, PB413, & PB650 blowers Length: 4-3/32", width: 2-5/8", height: 1-3/8"	
30-624	A226000350 A226000351 A226000470 A226000471 A226000472	**Air Filter** - NEW Fits Echo PB251, PB255, PB265, PE280, SRM266, & SRM280 Length: 3-1/8", width: 3-1/8", height: 3/8", ID: 3/8"	
30-617	A226000032	**Air Filter** - NEW Fits: 400, 500, 600, & 700 series backpack blowers Length: 4-5/32", width: 2-5/8", height: 1-3/8"	
55-201	130305-08360	**Air Filter** Fits PB4600-059919 & up, PB6000 Blower, PB 60-HT-Type 1E, PB4600 Type-1E, & PB46HT-Type 1E Length: 10-3/8", width: 2-7/8", height: 1-11/32"	
30-003	130310-04560	**Air Filter** Fits model 2400 hedge clipper, ES1100-001001 to 025416, LHB 2100, PB1000, & PB1010 backpack blowers Length: 2-3/4", width: 2-5/8" Hole diameter: 5/16"	
30-009	130310-51730	**Air Filter** Fits SRM2500 trimmer Length: 3-1/4", width: 3-1/4" Hole diameter: 5/16"	
30-616	13030508360 13030508361 Shindaiwa EB633	**Air Filter** - NEW Fits Echo PB60H, PB460, PB600, PB601, PB750, & PB755 series blowers Length: 10-3/8", width: 2-7/8", height: 1-11/32"	
30-121	130310-51830	**Air Filter** Fits SRM2400/SB, SRM2400, SRM2601, SRM3110, SRM3400, SRM3800, & SRM3100/SB trimmers, PB2400 & PB24LM blowers, SHC2400 & HCA2400 hedge clippers, STS2400 pole pruner, PAS2400, PE2400, & PE2601 Length: 3-1/8", width: 3-1/8" Hole diameter: 1/4"	
30-831		**Shop Pack** - 5 of 30-121	

T

Echo

OREGON	Replaces	Description	Product Code
30-119	130310-54130	**Air Filter** Fits GT2000/SB, GT2400, SRM2400/SB, & SRM2110 model trimmers, PB2100 blower, ES2100, ES2000, & ES2400 vacuums, FHC1700 & 2100 hedge clippers, SHC1500, 1600, 2000, & 2400 Length: 2-5/8", width: 2-5/8", Hole diameter: 1/4"	
30-830		**Shop Pack** - 5 of 30-119	
30-931	130317-00760 John Deere PT8376	**Foam Air Filter** Fits Echo PB400E, John Deere 4 & 4 E, & Toro 40cc blowers For backpack blowers Use with heavy-duty filter kit Pre-oiled foam air filter Length: 7"	
55-227	130310-03360 John Deere PT10281	**Air Filter** Fits PB210E For John Deere blower 2E Felt with rubber seal Length: 4", width: 2-7/8"	
07-088	123181-39130	**Primer Bulb** Fits Echo PB770, PB770H, PB770T, SRM, CS310, CS340, CS370, CS400, SRM400, PB770T, & PB770	
07-084	125381-08660	**Primer Bulb** Fits Echo PB265L, PB403H, PB403T, PB460LN, PB620, PB620H, PE2400, PE265, GT200, GT2000, & GT230	
07-090	132115-44330	**Fuel System Kit** Fits Echo SRM2102, SRM1500, SRM2300 HC160, HC180, HC200, PB265, PB1000, PB255LN, HC2400, CS340, CS400, CS370, & CS450 Includes 13211544330 fuel tank grommet, V471001860 line, 13201049730 line, 13201309820 clip, & 13120519831 fuel filter	
07-085	132115-55930	**Fuel System Kit** Fits Echo PB403, PB413, PB460, PB460LN, PB500, PB500T, PB600PB610, PB620, PB413, PB413H, PB500T, & Shindaiwa EC7500 engine cut off saw. Includes 13211555930 fuel tank grommet, A356000031 vent, V490001230 clip, V471000110 line, 13201056330 line, 13201052030 line, & 13120519831 fuel filter	
55-115	177215-44430	**Starter Pulley** For models SMR2400 & SMR2410 OD: 2-1/8"	

T

Trimmer / Blower Parts

OREGON	Replaces	Description	Product Code	
Echo				
55-116	178010-52130	**Throttle Lever**		
55-252	175009-05532 AM115397 (John Deere)	**Clutch Shoe Assembly** Fits SRM250E, SRM2000, SRM2200, SRM2201, SRM2500, SRM2501, SRM2502, SRM2510, SRM2510S, & John Deere 25S		
55-120	131004-06320	**Fuel Cap** Fits "GT" series trimmers to 1991, also fits other brands & models ID: 1-3/16"		
55-008	131004-06610	**Fuel Cap** Fits 4500 & 4600 model blowers vented ID: 1-1/2"		
31-100	177228-01110	**Starter Handle** For trimmers and saws		
55-122	131004-40930 131004-55730 AM105998 (John Deere)	**Fuel Cap** Fits newer "GT" series trimmers (1992 & newer), & PB100, 1010, & 2400 Blowers ID: 1.474" (37 mm)		
36-423	A27000013	**Spark Plug Boot** - NEW Fits PB265L & PPT265S Angle: 45 Size: 7.0 mm		
55-157	131300-56430	**Vent Assembly** Fits models GT1100, 2000, 2100, 2102, 2103, 2400, SRM 1500, 1501, 2100, 2300, 2301, 2400, 2500, 2501, 2510, 3000, 3800, SRS 2100, PE 2400, PB1000/1010, 2400, ES 2000, & SHR 2100 For 3/16" line OD: 3/8", length: 1"		
42-061	P021001392 P021001393	**Trimmer Guard Shield** - NEW Fits: SRM225, SRM2400, SRM230, SRM2100, SRM210, SRM260, SRM261, & SRM280 Fits 1" to 1-1/4" Shafts		

T

OREGON	Replaces	Description	Product Code

Green Machine

55-252 — Replaces: 190025, 190111, 211325S (Hoffco)

Clutch Shoe Assembly
Fits 1900, 2400M, 2500, 2800, 2810, 3000M, 3000SS, 3010M, 4000M, Hoffco JP300F (1995), JP220F (1996), & SE301F (1995-1996)

Homelite

55-611 — Replaces: D98760, D98760B

Foam Air Filter
Fits ST145, 155, 175, 185, 285, 385, 485 trimmers, HB100, & 180 Blower
Length: 1-3/4", width: 1-1/2", height: 3/8"
Pre-oiled foam air filter

55-741 — Replaces: DA-98912E, UP-00145

Spool and Line for Models
Fits K100, K200, K300, K400, BC900, C300, DC800, D725CD, HLT15, SX135, Z625CDV, Z625CD, Z725CDV, Z825SD, Z725CB, ST145, ST155, ST175, ST175C, ST185, ST275, ST285, Z725CE, Z725SE, S825CDV, S825SDV, S725SEV, HGT, GST18, GSTBC, & I725CE

55-255 — Replaces: 08832-01, UP04117, AO3006

Throttle Cable
Fits ST155 & ST185 string trimmers
Overall length: 19"
Conduit length: 11"

55-184 — Replaces: DP153592

Clutch Drum
Fits Ryobi trimmer equipped with clutch

55-256 — Replaces: 08832-02, UP04557

Throttle Cable
For Easy Reach, Easy Trim & Phantom trimmers
Overall length: 17"
Conduit length: 12-5/8"

55-821 — Replaces: DA98866A

Bump Head Knob (black)
For E-Z Line advance systems with 5/16-18 RH thread
Fits models ST155, ST165, ST175, ST285, SX135, GST-18, HLT-15, HGT, ST185BC, ST275, & GST

55-816 — Replaces: DA97910A

Bump Head Knob (red)
Fits E-Z Line advance systems with LH knob
Fits ST385, ST385C, ST485, ST385BC, HBC30, & ST375

T

Trimmer / Blower Parts

OREGON	Replaces	Description	Product Code

Husqvarna

55-168	503 775 301	**Starter Pulley** Fits brushcutter models 232R, 235R, & 322	
33-213	501 485 402	**Spark Plug Boot** 45º angle Fits brushcutter models 232, 235, 322, & 325	
55-164	503 911 802	**Fuel Cap** For brushcutter models 232R, 235, 322, & 325	
07-071	501 28 59-01	**Fuel Line** For saws and trimmers 140, 162, 266, 36, & 61	
33-158	503718201	**On/Off Switch** For trimmer models 123C, 123HD, 123L, 123LD, 225AI, 225B, 225BX, 225E, 225H, 225HBV, 225L, 225LD, 225 LITE, 225R, 225RD, 225RJ, 227L, 227JD, 227R, 227RD, 227RJ, 232L, 232R, 232RD, 232RL, 235R, 235RL, 240, 240R, & 240RBD	
30-652	577633001	**Pre-Filter** - NEW Fits Red Max BCZ230TS, BCZ2450, BCZ2460, BCZ260, BCZ2650, BCZ2660, BCZ3050, & BCZ3060	
05-027	577 88 47-01	**Spring for Engine** - NEW Fits BCZ 260TS trimmer	

Maruyama

55-206	261598	**Foam Air Filter** Fits MC2300, MC2600, & MC3210 trimmers Height: 1", OD: 2-3/16", ID: 1-5/16"	
31-913	261628	**Starter Handle** Fits MC2300, MC2600, & MC3210	

OREGON	Replaces	Description	Product Code

Maruyama

07-162	261696	**Breather Assembly** Fits Maruyama BC3200, BC420H, BC2300, BC2600, BC2600H, BCL2250, & BC200	
07-084	261874	**Primer Bulb** Fits Maruyama BC200, BC230, BC260, BC2550, BC2800, BCL2250, BC3200, BC3100, BL4500SP, & BL4600SP	
07-097	265752	**Fuel Line and Filter** Fits Maruyama BC200, BC230, BC260, BC2550, & BC2800	
07-094	267328	**Fuel Filter** Fits Maruyama BC200C, BC2300, BC2600, BC3200, & BC4200	
07-098	268062	**Fuel Line and Filter** Fits Maruyama BC3020 & BL3100	
07-099	597949	**Fuel Grommet** Fits Maruyama BL4500SP & BL4600SP	

McCulloch

55-743	300736	**Bump Knob** Fits models MAC 15RT, 2815/16/17/18/25/27/60/65/80, Eager Beaver 15RT, 28, 28C, 280, 282, 285, 285BC, 287BC, Road Runner II, III, Silver Eagle 15RT, 28, 28C, 32BC, ET270, T0005, 29, MT270X, 280X, 300X, 302X, MT280, & MT320	
55-326	300149	**Throttle Cable** Braided Innerwire Fits Mac 2815 & 2816, some Silver Eagle, Eager Beaver, & Road Runner Overall length: 16-1/4" with Z-bend on each end Conduit length: 7"	

MTD

07-017	781-682039	**Fuel Filter Assembly** Fits 1/8" ID fuel line	

Trimmer / Blower Parts

OREGON	Replaces	Description	Product Code

MTD

55-803	791-153066B	**Bump Knob**	
55-812	791-180814B	**Bump Knob**	
43-021	753-04232 791-181597	**Recoil Pulley** Fits MTD (Ryobi, Yard Man, Bolens, Troy-Bilt) 725R, 750R, 765R, 775R, & 790R	

Red Max

30-068	T4012-82310	**Air Filter** Fits EB7000 blower	
30-067	550-82171	**Foam Air Filter** Fits BC2300DL & BC2600DL trimmers Pre-oiled foam	
30-955	T4012-82320	**Air Filter** Fits EB-7000 blower Pre-oiled foam	
30-652	577633001 57763301	**Pre-Filter** - NEW Fits Red Max BCZ230TS, BCZ2450, BCZ2460, BCZ260, BCZ2650, BCZ2660, BCZ3050, & BCZ3060	
55-252	1100-51113 1130-00602	**Clutch Shoe Assembly** Fits BT2000, BC2001DL, & BC2300DL	

Ryan (Ryobi)

07-017	682039	**Fuel Filter Assembly** For Ryobi, Ryan, IDC, & Lawn Boy trimmers Fits 1/8" ID fuel line	

T

OREGON	Replaces	Description	Product Code

Ryan (Ryobi)

55-179	153619	**Outer Body, Trimmer Head** For Ryobi trimmer models 130R, 135R, 700R, 710R, 720R, 740R, 750R, 760R, 765R, 766R, 768R, 770R, 920R, 960R, & 970R, Singer models GT2815, GTS2816, & GTE2818, & Sears Weedwacker models 71-51315, 71-51716, 71-51315, 71-51715, & 71-51425	
55-182	181468	**Bump Knob and Spring Assembly** For Ryobi trimmer	
55-184	DP153592 (Homelite)	**Clutch Drum** For Ryobi trimmer equipped with clutch	
55-800	683856 706-16835 (K & S)	**Starter Pulley** Fits models 265-1, 365-SSR, 284-3, 264-3, & Lawn Boy 1150, 1400CL, & 1480	
55-820	682030 167304 (Green Machine) 4-2005 (Snapper)	**Starter Pulley** Fits Lawn Boy 3100, 3130, 3160, 1300, 1360, SSI, SSII, 1400, 1460, & 1100, & Snapper models 310 & 311	
55-803	153066 682069 (Lawn Boy) 4-2076 (Snapper)	**Bump Knob** Fits all IDC, RYOBI, & Ryan trimmers except models 395, 580, 580-1, & 780R	
55-812	180814 147496	**Bump Knob** Fits IDC models 395 & 580–780	
05-072	610317 4-2074 (Snapper)	**Spring** Fits Red Max, Snapper, Ryobi, Ryan, & IDC 13/16" x 1-3/16"	

Shindaiwa

55-231	20000-81740S Stihl 4114-124-0800 Green Machine 309891 Robin 1082	**Foam Air Filter** Fits T20, T25, C35, & B45 trimmers Diameter: 2-1/4", thickness: 5/16" Pre-oiled	

T

Trimmer / Blower Parts

OREGON	Replaces	Description	Product Code

Shindaiwa

55-510	70064-82210	**Foam Air Filter** Fits T18, F18, T230, C230, LE230, & TT230XB trimmers Length: 3-3/8", width: 9/16" Pre-oiled	
30-721	60023-98031	**Air Filter** Fits T230 & T231 trimmers Length: 2-1/4", width: 1-7/8", height: 3/8"	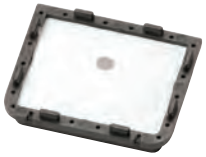
55-253	20035-5100 20035-51101	**Clutch Assembly** Fits F18, T18, T20, LT20, C20, & TC1230 trimmers	
55-121	20000-51104 20000-51103 20018-51100 70140-51102	**Clutch Assembly** For trimmer models TC25 & TC250	
55-097	200000-85200	**Fuel Cap** For models T20, T25, C25, B45, LT20, F21, C20, & T/C24 Not vented ID: 1-/2"	
57-050	20021-51102 20021-51101 20021-61101	**Clutch Drum** Fits C35 straight-shaft trimmer	

Snapper

55-120	4-2110	**Fuel Cap** Fits models 212CST, P212CST, 213CST, & 215SST	

Stihl

55-079	4134-141-0300	**Air Filter** Fits FS200, FS300, FS350, FS400, & FS450 brushcutter trimmers Length: 3-1/2", width: 2-3/4", thickness: 1"	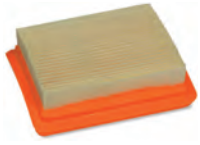
30-416	4203-141-0300	**Air Filters** For BR320 & BR400 backpack blowers OD: 2-7/8", ID: 2", height: 1-1/2"	
30-837		**SHOP PACK** - 5 of 30-416	

T

Stihl

OREGON	Replaces	Description	Product Code
30-137	4203-141-0301	**Air Filter** Fits Early versions of BR320, 340, 400, & 420 backpack blowers Length: 5-1/8", width: 3-1/2", height: 1-1/2"	
30-644	4229-120-1800 4229 124 1500	**Air Filter and Prefilter - NEW** Fits Stihl BG45, BG46, BG55, BG65, BR45, SH55, & SH85 Length: 3", width: 2-3/8", height: 1/2"	
30-643	4180-120-1800	**Air Filter - NEW** Fits FC100, FC110, FC90, FC95, FR130, FS90R, FS100, FS100ARX, FS110, FS130, FS310, FS87, FS90, FT100, FX130, HL100, HL90, HL95, HT100, HT101, HT130, HT131, KM100, KM110, KM130, KM90, & SP90 Length: 2-5/8", width: 3", height: 1/2"	
30-365	4140-124-2800	**Air Filter - NEW** Fits FS38, FS45, FS46, FS55, KM55, HL45, HS45, & FC55 Length: 2-7/16", width: 2-1/4", height: 1/4"	
30-649	4203-007-1028	**Air Filter - NEW** Fits BR340, BR340L, BR380, BR420, BR420C, SR340, & SR420 Length: 5-1/8", width: 3-1/2", height: 1-1/2"	
55-247	4203-141-0310	**Felt Pre-Cleaner** Fits BR320 & 400 backpack blowers For Oregon® 30-416 Length: 4-3/4", height: 1-1/2"	
55-231	4114-124-0800 Green Machine 309891 Robin 1082	**Foam Air Filter** Fits Stihl old style models FS50, FS51, FS60, & FS61 Diameter: 2-1/4", thickness: 5/16"	
30-956	4137-124-1500	**Air Filter** Fits FS75, FS80, FS85, HS80, HL75K, FC75, & BG75 Length: 2-7/16", width: 2-7/16", height: 1/4" Pre-oiled	
31-914	1121-195-3400	**Starter Handle** Fits 024, 028, 031, 034, 038, 041, & 070 chainsaws, FS220, FS280 trimmers, & BR320 & 3400 blowers	
07-073	4130-350-6200	**Primer Bulb with Line** Fits FS350 & FS400	

T

Trimmer / Blower Parts

OREGON	Replaces	Description	Product Code

Stihl

07-074	4128-358-0800	**Fuel Line** Fits FS350 & FS400	
55-111	1121-430-0200	**Stop Switch** Fits models 024, 026, 070, TS08, & TS350	
55-110	4112-350-3500	**Fuel Line Assembly** For FS80 trimmer	
55-102	4126-350-0501C	**Fuel Cap** Fits FS56, 66, 81, & FS86 ID: 1-1/2"	
55-109	4114-350-0502	**Fuel Cap** Fits FS80 ID: 1.559" (39mm)	
55-460-1	4111-007-1001	**Poly Cut Blade** Fits Hoffco Slasher, Comet Clipper & Vandermolen Combo Length: 4-1/16", hole diameter: .475"	

Tanaka

55-106	595-0165-C-92	**Fuel Cap** For trimmers Also fits Kawasaki ID: 1-1/4"	
07-092	6684620	**Fuel Filter** Fits Tanaka TBC250SF, TBC260SF, TBC340PF, TBC5500, TBC450, TBC280, & TBC225	
07-088	6685139	**Primer Pump** Fits Tanaka TBC300, TBC2800, TBC265, TBC270, TBC250, THT2510, THT2510-2540, & MTD2522	
07-094	6692273	**Fuel Filter** Fits Tanaka TBC35cc brush cutter, TBC400, TBC422, TBC500, TBC600, TBL4600, TBL500, & TBL7800	

T

OREGON	Replaces	Description	Product Code

Weed Eater

55-822	530-026048	**Starter Pulley** Fits 1500, 1700, & XR series trimmers, John Deere 82G, & Husqvarna 23LC, 26LC, & 32L	
55-281	952-711548 530-086473	**Spool and Line** Fits Weed Eater models ST400, PL200, 25HO, & SST	
55-285	952-701663	**Spool and Line** Fits Weed Eater models RT10, 110, 112, RTE113, 114, SG10, 12, 14, 15, TE15, 35, 40, 44, 45, X7110, 112, 114, & 115	

Universal

55-185	Universal	**Universal Trimmer Strap** Comes complete with universal clamp & adjustable strap to fit most string trimmers. Heavy-duty nylon construction	
55-186	Universal	**Trimmer Harness** Wide shoulder & neck pad, adjustable shoulder strap, hip pad & quick release. Fits Stihl, Solo, Poulan, Homelite, Hoffco, Echo, Brush King, & others. Heavy-duty construction	

Can't find what you're looking for?
Try us online to search the latest products available.

OregonProducts.com

Trimmer / Blower Parts

OREGON	Replaces	Description	Product Code

Semi-Pneumatic Wheels

72-106	Universal	**Semi-Pneumatic Wheel** Size 6 x 150 I.D.: 1/2" Hub: offset, plastic Hub length: 1-3/8" Tread design: diamond	
72-406	Universal	**Semi-Pneumatic Wheel** Size 6 x 150 I.D.: 1/2" Hub: centered, steel Hub length: 1-3/8" Tread design: diamond	
72-427	Universal	**Semi-Pneumatic Wheel** Size 6 x 150 I.D.: 1/2" Hub: offset, steel Hub length: 1-3/8" Tread design: diamond	
72-107	Universal	**Semi-Pneumatic Wheel** Size 7 x 150 I.D.: 1/2" Hub: offset, plastic Hub length: 1-3/8" Tread design: diamond	
72-407	Universal	**Semi-Pneumatic Wheel** Size 7 x 150 I.D.: 1/2" Hub: centered, steel Hub length: 2-1/16" Tread design: diamond	
72-430	Universal	**Semi-Pneumatic Wheel** Size 7 x 150 I.D.: 1/2" Hub: offset, steel Hub length: 1-3/8" Tread design: diamond	
72-108	Universal	**Semi-Pneumatic Wheel** Size 8 x 175 I.D.: 1/2" Hub: offset, plastic Hub length: 1-3/8" Tread design: diamond	
72-408	Universal	**Semi-Pneumatic Wheel** Size 8 x 175 I.D.: 1/2" Hub: centered, steel Hub length: 2-1/16" Tread design: diamond	

Wheels

OREGON	Replaces	Description	Product Code

Semi-Pneumatic Wheels

72-409	Universal	**Semi-Pneumatic Wheel** Size 8 x 175 I.D.: 5/8" Hub: centered, steel Hub length: 2" Tread design: diamond	
72-437	Universal	**Semi-Pneumatic Wheel** Size 8 x 175 I.D.: 1/2" Hub: offset, steel Hub length: 1-3/8" Tread design: diamond	
72-110	Universal	**Semi-Pneumatic Wheel** Size 10 x 175 I.D.: 1/2" Hub: offset, plastic Hub length: 1-1/2" Tread design: diamond	
72-410	Universal	**Semi-Pneumatic Wheel** Size 10 x 175 I.D.: 1/2" Hub: centered, steel Hub length: 2-1/4" Tread design: rib	
72-446	Universal	**Semi-Pneumatic Wheel** Size 10 x 175 I.D.: 1/2" Hub: offset, steel Hub length: 1-5/8" Tread design: rib	
72-413	Universal	**Semi-Pneumatic Wheel** Size 10 x 275 I.D.: 5/8" Hub: centered, steel Hub length: 2-1/2" Tread design: rib	
72-449	Universal	**Semi-Pneumatic Wheel** Size 10 x 275 I.D.: 5/8" Hub: offset, steel Hub length: 2-1/4" Tread design: rib	
72-414	Universal	**Semi-Pneumatic Wheel** Size 12 x 175 I.D.: 1/2" Hub: centered, steel Hub length: 1-17/32" Tread design: rib	

OREGON	Replaces	Description	Product Code

Semi-Pneumatic Wheels

72-108	AMF 54446	**Semi-Pneumatic Wheel** Size: 8 x 175 I.D.: 1/2" Hub: offset, plastic Hub length: 1-3/8" Tread design: diamond	
72-001	AYP 150340 AYP 193144	**Semi-Pneumatic Wheel** Size: 8 x 200 I.D.: 1/2" Hub: plastic gear, black Hub length: 1-5/8" Tread design: gear	
72-014	AYP 180767	**Semi-Pneumatic Wheel** Size: 8 x 200 I.D.: 1/2" Hub: plastic gear Hub length: 1-5/8" Tread design: gear	
72-003	AYP 701575	**Semi-Pneumatic Wheel** Size: 8 x 200 I.D.: 1/2" Hub: plastic gear, yellow Hub length: 1-5/8" Tread design: gear	
72-458	AYP 700953	**Semi-Pneumatic Wheel** Size: 8 x 200 I.D.: 1/2" Hub: plastic gear, white Hub length: 1.6" Tread design: gear	
72-076	AYP 180773	**Semi-Pneumatic Wheel** Size: 8 x 200 I.D.: 1/2" Hub: plastic gear, white Hub length: 2-1/2" Tread design: gear	
72-077	AYP 180775	**Semi-Pneumatic Wheel** Size: 8 x 200 I.D.: 1/2" Hub: plastic gear, black Hub length: 1-9/16" Tread design: gear	
72-033	AYP 194231X427	**Semi-Pneumatic Wheel** Size: 8 x 200 I.D.: 1/2" Hub: plastic gear, white mag style Hub length: 1-9/16" Tread design: gear	

Wheels

OREGON	Replaces	Description	Product Code

Semi-Pneumatic Wheels

72-138	AYP 194231X460	**Semi-Pneumatic Wheel** Size: 8 x 200 I.D.: 1/2" Hub: plastic gear, gray mag style Hub length: 1-9/16" Tread design: gear	
72-136	AYP 407755X427	**Semi-Pneumatic Wheel** Size: 8 x 200 I.D.: 1/2" Hub: plastic gear, white mag style Hub length: 1-9/16" Tread design: gear	
72-137	AYP 407755X460	**Semi-Pneumatic Wheel** Size: 8 x 200 I.D.: 1/2" Hub: plastic gear, gray mag style Hub length: 1-9/16" Tread design: gear	
72-139	AYP 150341 AYP 532150341	**Semi-Pneumatic Wheel** Size: 9 x 200 I.D.: 1/2" Hub: plastic offset, black Hub length: 1-3/8" Tread design: gear	
72-344	AYP 583719501	**Semi-Pneumatic Wheel** Size: 8"X 1-3/4" Mounted on: PP and PVC Bearing Size: 1/2"(12.7mm) Tread: Gear Hub: plastic gear, white mag style Hub Length: 1-5/8"	
72-745	Bobcat 38012N	**Semi-Pneumatic Wheel** Size: 6 x 175 I.D.: 5/8" Hub: centered, steel Hub length: 2-1/4" Tread design: rib	
72-746	Bobcat 76167	**Semi-Pneumatic Wheel** Size: 8 x 175 I.D.: 1/2" Hub: offset, steel with zerk Hub length: 2" Tread design: rib	
72-747	Bobcat 76168	**Semi-Pneumatic Wheel** Size: 10 x 175 I.D.: 1/2" Hub: offset, steel with zerk Hub length: 2" Tread design: rib	

W

OREGON	Replaces	Description	Product Code

Semi-Pneumatic Wheels

72-745	Bunton PL0642	**Semi-Pneumatic Wheel** Size: 6 x 175 I.D.: 5/8" Hub: centered, steel Hub length: 2-1/4" Tread design: rib	
72-169	Honda 42700-VK6-020ZA	**Semi-Pneumatic Wheel** Size: 9 x 2-1/4 I.D.: 9/16" Hub: offset with metal gear, dark gray plastic, ball bearings Hub length: 1-15/16" Tread design: turf	
72-170	Honda 42710-VE2-M01ZE Honda 42710-VG3-B00	**Semi-Pneumatic Wheel** Size: 8 x 2 I.D.: 1/2" Hub: offset with metal gear, gray plastic, ball bearings Hub length: 1-3/4" Tread design: wave	
72-172	Honda 44710-VL0-L01ZB	**Semi-Pneumatic Wheel** Size: 8 x 2 I.D.: 1/2" Hub: offset, gray plastic, ball bearings Hub length: 1-3/4" Tread design: wave	
72-052	Honda 44710-VG3-000	**Semi-Pneumatic Wheel** Size: 8 x 2 I.D.: 1/2" Hub: offset gray plastic Hub length: 1-3/8" Tread design: wave	
72-456	Husqvarna 532-0869-43	**Semi-Pneumatic Wheel** Size: 8 x 175 I.D.: 1/2" Hub: offset, plastic gear Hub length: 1-7/8" Tread design: diamond	
72-115	John Deere AM115138	**Semi-Pneumatic Wheel** Size: 8 x 200 I.D.: 5/16" Hub length: 1-1/2"	
72-022	John Deere GX10003	**Semi-Pneumatic Wheel** Size: 8 x 175 I.D.: 1/2" Hub: offset, plastic Tread design: diamond	

W

Wheels

OREGON	Replaces	Description	Product Code

Semi-Pneumatic Wheels

72-500	Lawn Boy 681979 Lawn Boy 678406	**Semi-Pneumatic Wheel** Size: 6 x 150 I.D.: 1/2" Hub: offset, steel Hub length: 2" Tread design: smooth	
72-508	Lawn Boy 681980 Lawn Boy 68213 Lawn Boy 678406	**Semi-Pneumatic Wheel** Size: 8 x 175 I.D.: 1/2" Hub: offset, steel Hub length: 2" Tread design: smooth	
72-746	Lawn Boy 153800	**Semi-Pneumatic Wheel** Size: 8 x 175 I.D.: 1/2" Hub: offset, steel Hub length: 2" Tread design: rib	
72-436	Lawn Boy 682974 Lawn Boy 678637	**Semi-Pneumatic Wheel** Size: 8 x 175 I.D.: 1/2" Hub: offset, steel Hub length: 1-3/8" Tread design: smooth	
72-747	Lawn Boy 153802	**Semi-Pneumatic Wheel** Size: 10 x 175 I.D.: 1/2" Hub: offset, steel, “MAG” design Hub length: 2" Tread design: rib	
72-430	MTD 734-0480	**Semi-Pneumatic Wheel** Size: 7 x 150 I.D.: 1/2" Hub: offset, steel Hub length: 1-3/8" Tread design: diamond	
72-112	MTD 634-0021A	**Semi-Pneumatic Wheel** Size: 8 x 175 I.D.: 1/2" Hub: offset, plastic Hub length: 1-1/2" Tread design: turf	
72-054	MTD 734-1781	**Semi-Pneumatic Wheel** Size: 8 X 175 I.D.: 1/2" Hub: offset, plastic Hub length: 1-7/16" Tread design: bar tread	

OREGON	Replaces	Description	Product Code

Semi-Pneumatic Wheels

72-073	MTD 734-2042	**Semi-Pneumatic Wheel** Size: 8 x 200 I.D.: 1/2" Hub: offset, plastic gear Hub length: 1-3/8" Tread design: zag	
72-072	MTD 734-04082	**Semi-Pneumatic Wheel** Size: 12 x 175 I.D.: 1/2" Hub: spoke, plastic with ball bearing Hub length: 2-3/8 Tread design: diamond	
72-024	MTD 734-1976	**Semi-Pneumatic Wheel** Size: 14 x 175 I.D.: 1/2" Hub: spoke, plastic Hub length: 2-3/8" Tread design: diamond	
72-346	73404018C	**Semi-Pneumatic Wheel** Size: 8 x 200 ID: 1/8" Mounted on: PP + Rubber Bearing Size: 1/2" (12.7mm) Tread: Gear Hub: Offset, Steel Hub Length: 1-7/16"	
72-113	Murray 71133	**Semi-Pneumatic Wheel** Size: 8 x 200 I.D.: 1/2" Hub: plastic, gear Hub length: 1-3/8" Tread design: turf	
72-004	Murray 672441	**Semi-Pneumatic Wheel** Size: 8 x 200 I.D.: 1/2" Hub: offset, gear Hub length: 1-3/8" Tread design: lugged rib	
72-114	Murray 71132	**Semi-Pneumatic Wheel** Size: 8 x 200 I.D.: 1/2" Hub: offset, plastic Hub length: 1-3/8" Tread design: turf	

Wheels

OREGON	Replaces	Description	Product Code

Semi-Pneumatic Wheels

72-005	Noma 672440	**Semi-Pneumatic Wheel** Size: 9 x 200 I.D.: 1/2" Hub: offset, plastic Hub length: Tread design:	
72-108	Sears/Roper 8117J	**Semi-Pneumatic Wheel** Size: 8 x 175 I.D.: 1/2" Hub: offset, plastic Hub length: 1-3/8" Tread design: diamond	
72-437	Sears/Roper 101766X	**Semi-Pneumatic Wheel** Size: 8 x 175 I.D.: 1/2" Hub: offset, steel Hub length: 1-3/8" Tread design: diamond	
72-456	Sears/Roper 702245	**Semi-Pneumatic Wheel** Size: 8 x 175 I.D.: 1/2" Hub: offset, plastic Hub length: 1-7/8" Tread design: gear	
72-746	Sensation 083-106	**Semi-Pneumatic Wheel** Size: 8 x 175 I.D.: 1/2" Hub: offset, steel with zerk Hub length: 2" Tread design: rib	
72-747	Sensation 083-107	**Semi-Pneumatic Wheel** Size: 10 x 175 I.D.: 1/2" Hub: offset, steel with zerk Hub length: 2" Tread design: rib	
72-117	Snapper 1-8189	**Semi-Pneumatic Wheel** Size: 7 x 150 I.D.: 9/16" Hub: offset, plastic Hub length: 1-5/8" Tread design: diamond	
72-510	Snapper 1-1083	**Semi-Pneumatic Wheel** Size: 7 x 150 I.D.: 7/16" Hub: offset, steel, back to back bearings Hub length: 1-5/8" Tread design: diamond	

OREGON	Replaces	Description	Product Code

Semi-Pneumatic Wheels

72-450	Snapper 1-2348 Snapper 1-1082	**Semi-Pneumatic Wheel** Size: 8 x 175 I.D.: 7/16" Hub: offset, steel, back to back bearings Hub length: 1-5/8" Tread design: diamond	
72-109	Snapper 1-2579	**Semi-Pneumatic Wheel** Size: 9 x 175 I.D.: 9/16" Hub: offset, plastic Hub length: 1-5/8" Tread design: diamond	
72-442	Snapper 1-2345	**Semi-Pneumatic Wheel** Size: 9 x 195 I.D.: 7/16 x 9/16 Hub: offset, steel Hub length: 1-3/4" Tread design: diamond	
72-166	Toro 105-3036	**Semi-Pneumatic Wheel** Size: 8 x 2 I.D.: 1/2" Hub: offset, with metal gear, white plastic, mag Hub length: 1-11/16" Tread design: wave	
72-167	Toro 121-1379	**Semi-Pneumatic Wheel** Size: 8 x 2 I.D.: 3/8" Hub: centered with metal gear, ball bearings, white steel, 2-piece rim Hub length: 1-3/8" Tread design: turf	
72-168	Toro 121-1380	**Semi-Pneumatic Wheel** Size: 8 x 2 I.D.: 3/8" Hub: centered, ball bearings, white steel, 2-piece rim Hub length: 1-3/8" Tread design: turf	

Wheel Dust Covers

76-039	AYP 189403	**Wheel Dust Cover** For many self-propelled mowers	

Anti-Scalp Deck Rollers & Wheels

72-301	AMF/Noma 41585	**Deck Wheel** 5" x 1.25" ID: 1/2" Hub: offset, steel Hub length: 1-3/8" Tread: rib	

Wheels

OREGON	Replaces	Description	Product Code

Anti-Scalp Deck Rollers & Wheels

72-304	AMF/Noma 52584 AMF/Noma 39831	**Deck Wheel** 5" x 5/8" ID: 1/2" Hub: offset, plastic Hub length: 1-3/8"	
72-032	Ariens TCU18744 Gravely TCU18744 John Deere TCU18744	**Deck Wheel** 5" x 2-3/4" ID: 1/2" Hub: centered, plastic Hub length: 3-5/16"	
72-312	AYP 165746	**Deck Wheel** 5" x 2" ID: 1/2" Hub length: 1-9/16"	
72-031	AYP 174873	**Deck Wheel** 5" x 2-1/2" ID: 1/2" Hub: offset, plastic Hub length: 2-1/2"	
72-313	AYP 176066	**Deck Roller** 7" x 3 ID: 1/2" Plastic roller	
72-162	AYP 188606	**Deck Wheel** 5" x 1-7/8" ID: 1/2" Hub: offset, plastic Hub length: 1-5/8"	
72-307	AMF 52204 Case 25140 Gilson 208918 John Deere AM54243 John Deere AM32639	**Deck Wheel** 6" x 1-3/8" ID: 1/2" Hub: centered, plastic Hub length: 1-1/2"	
72-161	Bobcat 2721512	**Deck Wheel** 5" x 2-3/4" ID: 5/8" Hub: centered, plastic Hub length: 3-1/4"	
72-306	Bolens 173-5583 Bolens 1758846 Case C-25139 John Deere AM33718 Sears/Roper 105455X Gilson 210453	**Deck Wheel** 5" x 1-3/8" ID: 1/2" Hub: centered, plastic Hub length: 1-1/2"	

OREGON	Replaces	Description	Product Code

Anti-Scalp Deck Rollers & Wheels

72-026	Cub Cadet 634-3159	**Deck Wheel** 5" x 2-5/8" ID: 5/8" Hub: centered, plastic Hub length: 2-7/8"	
72-027	Cub Cadet 703-1890	**Deck Wheel** 5" x 2-5/8" ID: 1/2" Hub: offset, bronze Hub length: 2-3/8"	
72-015	Cub Cadet 743-04039	**Deck Wheel** 5" x 2-5/8" ID: 1/2" Hub: offset, plastic Hub length: 1-1/2"	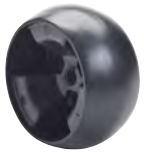
72-025	Cub Cadet 734-04155	**Deck Wheel** 5" x 2-5/8" ID: 1/2" Hub: offset, plastic Hub length: 2-7/16"	
72-311-1	Exmark 603299	**Deck Wheel** 5" x 2-3/4" ID: 5/8" Hub: offset, plastic Width: 2-1/2" Fits 38", 40" & 50" cut decks	
72-051	Exmark 103-3168	**Deck Wheel Kit** Includes Oregon® 72-311-1 wheel, 48-007 wheel bushing, & attachment hardware	
72-050	Exmark 103-7363 Exmark 103-7263 Exmark 103-4051	**Deck Wheel Kit** Includes Oregon 72-311-1 wheel & hardware to attach	
48-007	Exmark 603602	**Wheel Bushing** For Oregon® 72-311 ID: 3/8", OD: 5/8" Length: 2-13/16", flange OD: 1" Fits Turf Ranger, Turf Tracer, & Explorer models	
72-020	Exmark 103-8415	**Deck Wheel** 5" x 3-1/4" ID: 5/8" Hub: offset, plastic Hub length: 2-1/2"	

Wheels

OREGON	Replaces	Description	Product Code

Anti-Scalp Deck Rollers & Wheels

72-164	Exmark 109-2098	**Deck Wheel Kit** Includes Oregon 72-020 wheel & attachment hardware	
72-163		**Deck Wheel Hardware Kit** Includes Oregon 48-007 bushing & hardware to attach Oregon 72-311-1 wheel	
72-021	Ferris 1714760	**Deck Wheel** 4" x 2" ID: 1/2" Hub: offset, plastic Hub length: 2-1/2"	
72-135	Gravely 09253700	**Deck Wheel** 5" x 2-3/4" ID: 1/2" Hub: centered, plastic Hub length: 3-5/16"	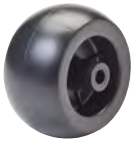
72-133	Grasshopper 426122	**Deck Wheel** 3" x 2" ID: 5/8" Hub: plastic Hub length: 2"	
72-134	Grasshopper 603725	**Deck Roller** 3" x 6-1/8" ID: 5/8" 2-piece snap together	
72-119	John Deere GX10168	**Deck Wheel** 5" x 2" ID: 5/8" Offset hub length: 1-3/4" Fits 42", 48", & 72" decks on L-100, L110, L120, & G100 series tractors	
72-099	John Deere AM107561	**Deck Wheel** 8" x 2" ID: 5/8" Hub: centered, plastic Hub length: 2-1/2" For 60" & 72" front-mount mowers	
72-098	John Deere AM107560	**Deck Wheel** 6" x 1-1/2" ID: 1/2" Hub: centered, plastic Hub length: 1-3/8" Terrace wheel for 48", 54", 60" and 72" decks	

W

OREGON	Replaces	Description	Product Code

Anti-Scalp Deck Rollers & Wheels

72-165	John Deere AM133602 John Deere M111489 John Deere AM116299	**Deck Wheel Kit** 5" x 2-1/2", 5/8"	
72-131	John Deere M113955	**Deck Roller** 3" x 2-1/2" ID: 11/16" Hub: centered, plastic Hub length: 2-1/2"	
72-129	John Deere M115245	**Deck Roller** 3-3/4" x 3-3/8" ID: 5/8" Hub: centered, plastic Hub length: 3-7/8"	
72-322	Kubota 76505-46250	**Deck Roller** 2-1/2" x 4" ID: 1/2" Hub length: 4"	
72-323	Kubota 76559-46250	**Deck Roller** 3-7/8" x 4" ID: 1/2" Hub length: 4"	
72-034	Kubota K5112-72420	**Deck Roller** ID: 1/2", OD: 2-1/2", length: 4"	
72-036	Kubota K5371-42110	**Deck Roller** ID: 5/8", OD: 5", hub length 2-1/2"	
72-038	Kubota K5668-42100	**Deck Wheel** 5" x 3" ID: 5/8" Hub: centered, metal bushing Hub length: 3-5/8"	
72-035	Kubota K5763-46250	**Deck Roller** ID: 1/2", OD: 3", length: 4"	

Wheels

OREGON	Replaces	Description	Product Code

Anti-Scalp Deck Rollers & Wheels

72-308-1	MTD 734-3058 Hustler 031997	**Deck Wheel** 5" x 2-5/8" Hub length: 2-3/8" Fits Rider series 200, 700, & 800 (1989–1998)	
72-318	MTD 734-0973	**Deck Wheel** 4-3/4" x 1-3/8" ID: 1/2" Hub: offset, plastic Hub length: 1-3/8" Fits Rider series 300, 400, 500, 600, 700, & 800 (1985–1998)	
72-319	MTD 731-3005	**Deck Roller** 6" x 2-1/2" ID: 9/16"	
72-094	Murray 92683	**Deck Wheel** 5" x 2-1/2" ID: 1/2" Hub: offset, plastic Hub length: 2-1/2"	
72-758	Scag 481632	**Deck Wheel** 4-1/2" x 2-7/8" Hub: offset, plastic Hub length: 2-7/8"	
72-029	Toro 29-4820	**Deck Roller** 2-3/4" x 3" ID: 1/2" Hub: plastic Hub length: 3"	
72-316	Wheel Horse 110506	**Deck Wheel** 6" x 1-3/4" ID: 1/2" Hub: offset, steel Hub length: 1-11/16" Tread: rib	
72-309	Wheel Horse 108798	**Deck Roller** 3" x 3-3/4" ID: 1/2" Hub length: 3-5/8" For most decks on riders & lawn & garden tractors	

W

OREGON	Replaces	Description	Product Code

Pneumatic Wheel Assemblies

72-796 Bobcat 38264

Caster Wheel Assembly
9 x 350-4 slick tread tire
Mounted on 3-piece wheel
Roller bearing size: 5/8"
Centered hub length: 4"
Use Oregon® 45-121 replacement wheel bearing kit

72-765 Dixon 1022

Caster Wheel Assembly
410/350-4 sawtooth tire with tube, 2-ply
Mounted on 1-piece white wheel
Heavy-duty ball bearing size: 5/8"
Hub length: 4.1"
Use (1) Oregon 45-088 bearing

72-722 Exmark 513648

Caster Wheel Assembly
9 x 350-4 slick tread tire
Roller bearing size: 3/4"
Hub length: 4 1/2"
Semi-Pneumatic, Flat Free Tire

72-342 Exmark 130-8364

Wheel Assembly - NEW
Size: 13 x 650-6
Mounted on: Steel and Rubber
Ball Bearing: 1"
Tread: Super Turf
Hub: Offset, Steel
4 Ply

72-723 Grasshopper 483803
Grasshopper 603924

Wheel assembly
9 x 350-4 smooth tread tire, 4-ply
Mounted on 1-piece wheel
Roller bearing size: 5/8", centered hub length: 3-1/4"
Semi-Pneumatic, Flat Free Tire

W

Wheels

OREGON	Replaces	Description	Product Code

Pneumatic Wheel Assemblies

72-795	Scag 48307-01	**Deck Wheel** 9 x 350 slick tread tire Mounted on 3-piece orange wheel Roller bearing size: 5/8" Centered hub length: 4" Use Oregon® 45-188 spanner bushing (not included)	
45-188	Scag 43022 Bobcat 43180	**Spanner Bushing** ID: 1/2", OD: 5/8", length: 4-1/16" Fits Oregon 72-707 (OBS) & 72-795	
72-701		**Wheel** 11 x 400-4 turf tire, 2-ply Mounted on 1-piece grey wheel with grease zerk Ball bearing size: 3/4" Offset hub length: 3-1/4" Use (2) Oregon 45-034 or 45-010 bearings	
72-729	Snapper 5-0618	**Wheel** 410/350-4 tubeless turf tread tire, 2-ply Mounted on 1-piece gray wheel Ball bearing size: 3/4" Offset hub length: 3-1/4" Use (2) Oregon 45-034 or 45-010 bearings	
72-728	Snapper 5-0618 Snapper 5-2267	**Wheel Assembly** 410/350-4 tubeless stud tire, 2-ply Mounted on 1-piece white wheel Ball bearing size: 3/4" Offset hub length: 3-1/4" Use (2) Oregon 45-034 or 45-010 bearings	

Semi-Pneumatic, Flat-Free Wheel Assemblies

72-725	Ariens 01588100 John Deere AM101589 Dixon 17080	**Flat Free Wheel Assembly** 11 x 400-5 tire Mounted on 1-piece white wheel Heavy-duty ball bearing size: 3/4" Centered hub length: 5" Use Oregon 45-000 heavy-duty bearings **Semi-Pneumatic, Flat Free Tire**	

W

OREGON	Replaces	Description	Product Code

Semi-Pneumatic, Flat-Free Wheel Assemblies

72-735
Exmark 103-0064
Toro 633582
Scag 482503
Wright Stander 72460004

Flat Free Wheel Assembly
13 x 500-6 tire
Pressed cup size for tapered roller bearings: 3/4"
Center hub length: 5-5/8"
Use with Oregon® 45-205 tapered roller bearings (not included)
Semi-Pneumatic, Flat Free Tire

72-736
Exmark 103-0065
Toro 633971
Scag 482504

Flat Free Wheel Assembly
13 x 650-6 tire
Pressed cup size for tapered roller bearings: 3/4"
Center hub length: 7-1/4" centered hub
Use with Oregon 45-205 tapered roller bearings (not included)
Semi-Pneumatic, Flat Free Tire

72-722
Exmark 513648

Flat Free Wheel Assembly
9 x 350-4 slick tread tire
Roller bearing size: 3/4"
Center hub length: 4 1/2"
Semi-Pneumatic, Flat Free Tire

72-341
Exmark 110-9965

Flat Free Wheel Assembly - NEW
11 x 400–5 tire
Thread: smooth
Mounting on: Steel and Rubber
Rolling Bearing: 3/4"
Tread: Smooth
Center Hub
Hub Length: 92 mm

72-723
Grasshopper 483803
Grasshopper 603924

Flat Free Wheel Assembly
9 x 350-4 tire
Mounted on 1-piece wheel
Roller bearing size: 5/8"
Center hub length: 3 1/4"
Semi-Pneumatic, Flat Free Tire

72-737
Gravely 52586
Gravely 45205
Ariens 71301

Flat Free Wheel Assembly
9 x 350-4 tire
Roller bearing size: 3/4"
Center hub length: 3-14"
Semi-Pneumatic, Flat Free Tire

72-738
King Kutter 168020

Flat Free Wheel Assembly
9 x 350-4 tire
Sintered iron bearing size: 3/4"
Center hub length: 3-1/2"
Semi-Pneumatic, Flat Free Tire

Wheels

OREGON	Replaces	Description	Product Code

Semi-Pneumatic, Flat-Free Wheel Assemblies

72-739	Ransomes 2722228 Bobcat 2722228	**Flat Free Wheel Assembly** 13 x 500-6 tire Ball bearing size: 25 mm Center hub length: 5-3/16" **Semi-Pneumatic, Flat Free Tire**	
72-749		**Flat Free Wheel Assembly** 8 x 300-4 tire Roller bearing size: 3/4" Center hub length: 3-1/4" **Semi-Pneumatic, Flat Free Tire** Use Oregon® 45-014 bearing and 45-015 bushing	
72-741	Scag 48307 Ransomes 38264 Ransomes 2720646	**Flat Free Wheel Assembly** 9 x 350-4 tire Roller bearing size: 5/8" Center hub length: 4" **Semi-Pneumatic, Flat Free Tire**	
72-347	Toro 105-1814 22" Recycler	**Flat Free Wheel Assembly - NEW** 8 x 1-3/4" Tread: Radial Center Hub Length: 1-3/4" Bore: 1/2"	
72-348	Toro 22" Recycler, 20012, 20016 (2002-2005) and 20019	**Flat Free Wheel Assembly - NEW** 12 x 1-3/4"-2 Bore: 1/2" Tread: Radial Hub length: 1-3/4"	
72-756	Walker 5715-4 Swisher 4218	**Flat Free Wheel Assembly** 8 x 300-4 tire Roller bearing size: 5/8" Center hub length: 3-1/2" **Semi-Pneumatic, Flat Free Tire**	

OREGON	Replaces	Description	Product Code

Wheels - Use With Pneumatic Tires Only

OREGON	Size	Rim Width	Cut Length	Product Code
72-800	410/350-4	2-3/4"	2" off-center	
72-804	410/350-6	3-1/4"	3-3/4" centered	

- 1-3/8" bore, 4-bolt pattern
- Furnished with 4 bolts & flange nuts, lock washers & nuts
- Welded on hub (add 1/4" to hub length for bearings)
- Use Oregon® 45-012, 45-058 or 45-034 bearings
- **Note:** cut length does not include bearings

72-804

Industrial Wheels - For Wheelbarrows

OREGON	Ball Size	Bearing	Rim	Axle Length	Tread Design	Product Code
72-420	480/400-8	5/8" (45-058)	8" dia. x 2-3/4" wide	6"	2-ply rib	

Can't find what you're looking for?
Try us online to search the latest products available.

OregonProducts.com

CODE FC401V-CS03
E/NO FC401VA27302

CROSS REFERENCES - X

Briggs & Stratton X-Reference . . LG 1048–1071

2018 OEM X-References . . . . . .LG 1072–1168

2018 Aftermarket X-References A1–48

Briggs & Stratton Quick X-Reference

Model		Foam Air Cleaner	Cartridge	Pre-Cleaner	Air Cleaner Gasket	Carb. Mtg. Gasket	Manifold Gasket	Head Gasket #1	Head Gasket #2	Gasket Set	Valve Cover Gasket
60100		30-906	30-094	30-923		49-355		50-544			49-107
60200		30-906									
60300		30-906									
60400		30-906									
60500		30-906									
61100		30-906	30-132	30-923							
61200		30-906									
61300		30-906									
61400		30-906									
61500		30-906									
80100		30-906				49-355		50-544			49-107
80200	0010–2200, 8000–8200, 9000 or greater	30-906	30-094	30-923		49-355		50-544			49-107
80200	2201-4900, 8901-8999	30-906	30-710	30-927		49-355		50-544			49-107
80300		30-906	30-094	30-923		49-355		50-544			49-107
80400		30-906	30-094	30-923		49-355		50-544			49-107
80500		30-906	30-761								
8P500		30-183									
80700		30-906									
80900		30-906									
81100		30-906									
81200		30-906	30-094	30-923		49-355		50-544			49-107
81300		30-906	30-094	30-923		49-355		50-544			49-107
81400		30-906	30-094	30-923		49-355		50-544			49-107
81500		30-906									
81700		30-906									
81900		30-906									
82200	0111-0200, 2035-2099, 8000-8199		30-094	30-923	49-131	49-355		50-544			49-107
82200	0300-0400, 2135-2199, 4000-5000		30-310	30-927		49-355		50-544			49-107
82300			30-094	30-923	49-131	49-355		50-544			49-107
82400			30-094	30-923	49-131	49-355		50-544			49-107
82500		30-908						50-544			49-100
82900		30-908						50-544			
83400			30-710	30-927	49-129	49-095		50-544			49-107
85400											
86400	Vanguard		30-710	30-927							
09K500		30-919									
09L500		30-919									
09S500		30-919									
09T500		30-919									
09L600		30-919									
09T600		30-919									
09P600		30-183									
09L700		30-919									
09P700		30-183									
09T700		30-919									
09T800		30-919									
9B900		30-917									
9C900	97073100 or less	30-917			49-131	49-095		50-027		50-408	
9C900	97073100 or greater 04011900 or less	30-917						50-445			
9C900	04011800 or greater	30-917						50-448			
9D900		30-917									
9E900		30-919									
9F900		30-919									
9G900		30-919									
9H900		30-919									
9J900		30-919									
9K900		30-919	30-735	30-928							
9L900		30-919									
9M900		30-919			49-131	02-644-0		50-448		50-408	49-100
9P700			30-168								
90100	96080110 or less	30-917				49-095		50-027		50-408	49-107
90100	96080110 or greater	30-906						50-445			
90200	96080110 or less		30-710	30-927		49-095		50-027			49-107
90200	96080110 or greater					49-095		50-445			49-107
90600			30-161	30-446							
90700			30-700	30-038	49-129	49-095		50-027		50-408	49-100
90900		30-917									
91200			30-710	30-927		49-095		50-027			49-107
91412			30-735	30-928							
91700			30-700	30-038	49-129	49-095		50-027		50-408	49-100
92200			30-710	30-927				50-445		50-408	49-107
92500	0600 or greater	30-917	30-094	30-923	49-131	49-111		50-027		50-408	49-100
92900	0500 or greater	30-917	30-132	30-923	49-131	49-111		50-027		50-408	49-100
93200			30-710	30-927		49-095		50-445			49-107
93300	Powerbuilt		30-123								
93400			30-735	30-928		49-095		50-445			49-107
93500		30-907	30-132	30-923	49-131	49-111		50-027		50-408	49-100
93900		30-917			49-131	49-111		50-027		50-408	49-100
93J00		30-183	30-168								

Base Gasket	Igition Armature	Diaphragm	Float Valve	Carb. Overhaul	Rod	Mag Oil Seal	PTO Oil Seal	Rings-Std	Starter Pulley	Recoil Spring	Recoil Starter
50-101	33-362 STD, 33-342 ELE					49-040-0			43-100	43-400-0	
	33-362 STD, 33-342 ELE					49-040-0					
	33-362 STD, 33-342 ELE					49-040-0					
	33-362 STD, 33-342 ELE					49-040-0					
	33-362 STD, 33-342 ELE					49-040-0	49-014-0				
	33-362 STD, 33-342 ELE					49-040-0					
	33-362 STD, 33-342 ELE					49-040-0					
	33-362 STD, 33-342 ELE					49-040-0					
	33-362 STD, 33-342 ELE					49-040-0					
	33-362 STD, 33-342 ELE					49-040-0	49-014-0				
50-101	33-362 STD, 33-342 ELE				36-101	49-040-0			43-100	43-400-0	
50-101	33-362 STD, 33-342 ELE	49-037		49-078	36-101	49-040-0			43-100	43-400-0	
50-101	33-362 STD, 33-342 ELE	49-037		49-078	36-101	49-040-0			43-100	43-400-0	
50-101	33-362 STD, 33-342 ELE				36-101	49-040-0			43-100	43-400-0	
50-101	33-362 STD, 33-342 ELE				36-101	49-040-0			43-100	43-400-0	
	33-362 STD, 33-342 ELE					49-040-0					
						49-040-0					
						49-040-0					
	33-362 STD, 33-342 ELE					49-040-0					
	33-362 STD, 33-342 ELE					49-040-0					
50-101	33-362 STD, 33-342 ELE	49-037		49-078	36-101	49-040-0			43-100	43-400-0	
50-101	33-362 STD, 33-342 ELE				36-101	49-040-0			43-100	43-400-0	
50-101	33-362 STD, 33-342 ELE				36-101	49-040-0			43-100	43-400-0	
	33-362 STD, 33-342 ELE					49-040-0					
						49-040-0					
	33-362 STD, 33-342 ELE					49-040-0					
50-101	33-342	49-037		49-078	36-101	49-040-0			43-100	43-400-0	
50-101	33-342	49-037		49-078	36-101	49-040-0			43-100	43-400-0	
50-101	33-342				36-101	49-040-0			43-100	43-400-0	
50-101	33-342				36-101	49-040-0			43-100	43-400-0	
50-101					36-101	49-040-0				43-400-0	
50-101		49-003			36-101	49-040-0				43-400-0	
50-101	33-342		49-036		36-101	49-040-0			43-100	43-400-0	
	33-342		49-359								
	33-342								31-041	31-041	31-918
	33-342					49-040-0			31-041	31-041	31-918
	33-342					49-040-0			31-041	31-041	31-918
	33-342					49-040-0			31-041	31-041	31-918
	33-342					49-040-0			31-041	31-041	31-918
	33-342					49-040-0			31-041	31-041	31-918
						49-040-0					
	33-342					49-040-0			31-041	31-041	31-918
						49-040-0					
	33-342					49-040-0			31-041	31-041	31-918
	33-352-0					49-040-0			31-041	31-041	31-918
	33-342					49-040-0		36-028			
50-101	33-342				36-101	49-040-0	49-041-0	36-028		43-400-0	
	33-342					49-040-0		36-028			
	33-342					49-040-0		36-028	31-041	31-041	31-918
	33-342					49-040-0		36-028	43-100	43-400-0	31-918
	33-342					49-040-0		36-028	43-100	43-400-0	31-918
	33-342					49-040-0		36-028	43-100	43-400-0	31-918
	33-342					49-040-0		36-028	43-100	43-400-0	31-918
	33-342					49-040-0		36-028	43-100	43-400-0	31-918
	33-342					49-040-0			43-100	43-400-0	31-918
	33-342					49-040-0		36-028			
	33-342					49-040-0		36-028	43-100	43-400-0	31-918
50-101	33-342	49-007				49-040-0	49-041-0	36-028	43-100	43-400-0	31-918
50-101	33-342				36-101	49-040-0		36-028	43-100	43-400-0	
	33-342					49-040-0		36-028			
50-101	33-342	49-037			36-101	49-040-0		36-028	43-100	43-400-0	31-918
50-101	33-342				36-101	49-040-0		36-028			
						49-040-0	49-204				
50-101	33-342		49-036		36-101	49-040-0	49-041-0		43-100	43-400-0	
	33-362 STD, 33-342 ELE					49-040-0					
50-101	33-342	49-037			36-101	49-040-0		36-028	31-041	31-041	
	33-342					49-040-0			31-041	31-041	31-918
50-101	33-342		49-036		36-101	49-040-0	49-041-0		43-100	43-400-0	
50-101	33-342	49-037			36-101	49-040-0		36-028	43-100	43-400-0	
50-101	33-362 STD, 33-342 ELE	49-005			36-101	49-040-0	49-041-0		43-100	43-400-0	
50-101	33-362 STD, 33-342 ELE	49-006			36-101	49-040-0	49-041-0		43-100	43-400-0	
50-101	33-342	49-037			36-101	49-040-0	49-040-0	36-028	31-041	31-041	31-918
	33-342					49-040-0					
50-101	33-342		49-036	49-305	36-101	49-040-0		36-028	31-041	31-041	31-918
50-101	33-362 STD, 33-342 ELE	49-005			36-101	49-040-0	49-041-0		43-100	43-400-0	
50-101	33-342	49-006			36-101	49-040-0	49-041-0		43-100	43-400-0	
						49-040-0					

Briggs & Stratton Quick X-Reference

Model		Foam Air Cleaner	Cartridge	Pre-Cleaner	Air Cleaner Gasket	Carb. Mtg. Gasket	Manifold Gasket	Head Gasket #1	Head Gasket #2	Gasket Set	Valve Cover Gasket
94000	I/C horizontal		30-123			49-095		50-027			49-100
94200			30-710	30-927							
94500		30-907	30-123		49-131	49-111		50-027		50-408	49-100
94900		30-907			49-131	49-111		50-027		50-408	49-100
95200			30-710	30-927							
95900											
95500		30-907			49-131	49-111		50-027		50-408	49-100
95700			30-700	30-038							
95900		30-917			49-131	49-111		50-027		50-408	49-100
96300			30-123								
96500		30-917			49-131	49-111		50-027		50-408	49-100
96700			30-700	30-038							
96900		30-917			49-131	49-111		50-027		50-408	49-100
97300			30-123								
97400			30-123								
98900		30-917			49-131			50-027		50-408	
99700			30-047	30-930							49-132
10L500		30-919									
10T500		30-919									
10L600		30-919									
10T600		30-919									
10L700		30-919									
10T700		30-919									
10L800		30-919	30-186								
10T800		30-919									
10A900	02101000 or less	30-917			49-131	49-111				50-408	
10A900	02101000 or greater	30-919									
10A900	04011900 or less							50-445			
10A900	04011800 or greater							50-448			
10B900	02101000 or less	30-917			49-131	49-111				50-408	
10B900	02101000 or greater	30-919									
10B900	04011900 or less	30-917						50-445			
10B900	04011800 or greater							50-448			
10C900	02101000 or less	30-917			49-131	49-111				50-408	
10C900	02101000 or greater	30-919									
10C900	04011900 or less							50-445			
10C900	04011800 or greater							50-448			
10D900	02101000 or less	30-917			49-131	49-111				50-408	
10D900	02101000 or greater	30-919									
10D900	03080400 or less							50-445			
10D900	03080400 or greater							50-448			
10E900	02101000 or less	30-917			49-131	49-111				50-408	
10E900	02101000 or greater	30-919									
10E900	04011900 or less							50-445			
10E900	04011800 or greater							50-448			
10F900	02101000 or less	30-917			49-131	49-111				50-408	
10F900	02101000 or greater	30-919									
10F900	04011900 or less							50-445			
10F900	04011800 or greater							50-448			
10G900		30-919			49-131	49-111		50-448		50-408	
10H900		30-919			49-131	49-111		50-448		50-408	
10J900		30-919			49-131	49-111		50-448		50-408	
10K900		30-919			49-131	49-111		50-445		50-408	
10L900		30-919									
10M900		30-919			49-131	49-111		50-445		50-408	
10N900		30-919									
10S900		30-919									
100200		30-913						50-542		50-410	
100600			30-161	30-446							
100700			30-720		49-129						49-132
100800			30-161	30-446							
100900		30-913	30-094	30-923				50-542		50-411	
103M00			30-168								
104M00			30-168								
104700			30-133	30-514							
110402	Flat panel air cleaner		30-710	30-927							
110402	High mount air cleaner		30-033	30-915							
11A600			30-710	30-961							
11C600			30-710	30-961							
11P900			30-172	30-181							
110600			30-710	30-927				50-447			
110700			30-700	30-038	49-129	49-125		50-547		49-163	49-100
110900		30-903	30-094	30-923	49-131	49-125		50-547		49-163	49-100
111P00			30-172	30-181							
111200		30-906						50-547			
111400			30-033	30-915							
111600			30-033	30-915	50-446			50-447			
111700			30-094	30-923	49-129			50-547		49-163	49-100
111900		30-903			49-129			50-547		49-163	
112P00			30-172	30-181							

Briggs & Stratton Quick X-Reference

Base Gasket	Igition Armature	Diaphragm	Float Valve	Carb. Overhaul	Rod	Mag Oil Seal	PTO Oil Seal	Rings-Std	Starter Pulley	Recoil Spring	Recoil Starter
50-101	33-342		49-036	49-225	36-101	49-040-0			31-041	31-041	
	33-342					49-040-0					
50-101	33-362 STD, 33-342 ELE	49-005			36-101	49-040-0	49-041-0		43-100	43-400-0	
50-101	33-362 STD, 33-342 ELE	49-006			36-101	49-040-0	49-041-0		43-100	43-400-0	
	33-342					49-040-0					
	33-342					49-040-0		36-028			
50-101	33-362 STD, 33-342 ELE	49-005			36-101	49-040-0	49-041-0		43-011	43-400-0	
	33-342								43-100	43-400-0	
50-101	33-342				36-101	49-040-0	49-041-0		43-100	43-400-0	
	33-342					49-040-0					
50-101	33-342	49-005			36-101	49-040-0	49-041-0		43-100	43-400-0	
	33-342										
50-101	33-342				36-101	49-040-0	49-041-0	36-028			
	33-342										
	33-342										
50-101	33-342	49-007			36-101	49-040-0	49-041-0	36-028	31-041	31-041	31-918
	33-342		49-036	49-305		49-040-0	49-204		43-014	43-403	
	33-342					49-040-0			31-041	31-041	31-918
	33-342					49-040-0			31-041	31-041	31-918
	33-342					49-040-0			31-041	31-041	31-918
	33-342					49-040-0			31-041	31-041	31-918
	33-342					49-040-0					
	33-342					49-040-0			31-041	31-041	31-918
	33-342					49-040-0			31-041	31-041	31-918
	33-342					49-040-0			31-041	31-041	31-918
50-101	33-342	49-007				49-040-0	49-041-0	36-028		43-400-0	
	33-342					49-040-0		36-028			
	33-342					49-040-0		36-028			
	33-342					49-040-0		36-028	31-041	31-041	31-918
50-101	33-342	49-007				49-040-0	49-041-0	36-028		43-400-0	
	33-342					49-040-0		36-028			
	33-342					49-040-0		36-028			
	33-342					49-040-0		36-028	31-041	31-041	31-918
50-101	33-342	49-007				49-040-0	49-041-0	36-028		43-400-0	
	33-342					49-040-0		36-028			
	33-342					49-040-0		36-028			
	33-342					49-040-0		36-028	31-041	31-041	31-918
50-101	33-342	49-007				49-040-0	49-041-0	36-028		43-400-0	
	33-342					49-040-0		36-028			
	33-342					49-040-0		36-028			
	33-342					49-040-0		36-028	31-041	31-041	31-918
	33-342					49-040-0		36-028	31-041	31-041	31-918
50-101	33-342	49-007				49-040-0		36-028	31-041	31-041	31-918
50-101	33-342	49-007				49-040-0			31-041	31-041	31-918
50-101	33-342	49-007				49-040-0			31-041	31-041	31-918
50-101	33-342	49-007				49-040-0			31-041	31-041	31-918
	33-342					49-040-0					
50-101	33-342	49-007				49-040-0			31-041	31-041	31-918
	33-342					49-040-0			31-041	31-041	31-918
	33-342					49-040-0			31-041	31-041	31-918
	33-340	49-037				49-040-0	49-046				
						49-040-0	49-204				
			49-036		36-102	49-040-0	49-204				
						49-040-0	49-204				
	33-340	49-037		49-076		49-040-0	49-049				
						49-040-0	49-204				
						49-040-0	49-204				
	33-341						49-204		43-014	43-403	
	33-353					49-040-0			31-063	31-063	31-068 31-919
	33-353					49-040-0			31-063	31-063	31-068 31-919
	33-341					49-040-0	49-204	36-027	31-063	31-063	31-068
	33-341					49-040-0	49-204	36-027	31-063	31-063	31-068
						49-040-0	49-204				
	33-341					49-040-0	49-204		31-063	31-063	31-068
50-101	33-342		49-036		36-102	49-040-0	49-041-0		43-100	43-400-0	
50-101	33-362 STD, 33-342 ELE	49-006			36-102	49-040-0	49-041-0		43-100	43-400-0	
						49-040-0	49-204				
	33-362 STD, 33-342 ELE	49-037			36-102	49-040-0					
						49-040-0			31-063	31-063	31-919
	33-342					49-040-0	49-204	36-027	31-063	31-063	31-068
	33-342				36-102	49-040-0	49-041-0		43-100	43-400-0	
	33-362 STD, 33-342 ELE	49-006			36-102	49-040-0	49-041-0				
						49-040-0	49-204				

X

Briggs & Stratton Quick X-Reference

Model		Foam Air Cleaner	Cartridge	Pre-Cleaner	Air Cleaner Gasket	Carb. Mtg. Gasket	Manifold Gasket	Head Gasket #1	Head Gasket #2	Gasket Set	Valve Cover Gasket
112200	0016-0799	30-906	30-132	30-923	49-131	49-074		50-547			49-107
112200	0016-0799		30-710	30-927	49-131	49-095		50-547			49-107
112700			30-700	30-038	49-129	49-125		50-547		49-163	49-100
112900		30-903	30-094	30-923	49-131	49-125		50-547		49-163	49-100
113400			30-033	30-915							
113900		30-903			49-131	49-125		50-547		49-163	49-100
114P00			30-172	30-181							
114700			30-094	30-923	49-129	49-125		50-547		49-163	49-100
114900		30-903	30-094	30-923	49-131	49-125		50-547		49-163	49-100
115400			30-735	30-928							
117400			30-710	30-927							
118400			30-710	30-927							
12A100											
12A300											
12A400											
12A600			30-710	30-961							
12A700											
12A800			30-710	30-927	49-069	49-108		50-543			49-132
12B400											
12B600											
12C100											
12C300											
12C400											
12C600			30-710	30-961							
12C700			30-710	30-961							
12C800			30-710	30-927	49-069	49-108		50-441			49-132
12D100											
12D200											
12D300	Intek Snow										
12D400											
12D600			30-710	30-961							
12D800			30-710	30-927	49-069	49-108		50-441			49-132
12E100											
12E300											
12E400											
12E600			30-710	30-961							
12E700			30-710	30-927	49-069	49-108		50-441			49-132
12E800			30-710	30-927	49-069	49-108		50-441			49-132
12F600											
12F700			30-710	30-927	49-069	49-108		50-441			49-132
12F800			30-710	30-927	49-069	49-108		50-441			49-132
12G600											
12G700			30-710	30-927	49-069	49-108		50-441			49-132
12G800			30-710	30-927	49-069	49-108		50-441			49-132
12H100			30-710	30-961							
12H200			30-710	30-961							
12H300			30-710	30-961							
12H600			30-033	30-915							
12H700			30-710	30-961							
12H800			30-710	30-961							
12J600			30-710	30-961							
12J700			30-710	30-961							
12J800			30-710	30-927	49-069	49-108		50-441			49-132
12J900			30-710	30-961							
12K300											
12K600			30-033	30-915							
12L200			30-710	30-961							
12L300			30-710	30-961							
12L800			30-710	30-961							
12L900											
12M800											
12P800			30-710	30-961							
12Q500			30-033	30-915							
12Q800			30-710	30-961							
12Q900			30-172	30-181							
12R100											
12R500			30-033	30-915							
12R600			30-033	30-915							
12R900			30-172	30-181							
12S100			30-033	30-915							
12S200			30-710	30-961							
12S400			30-033	30-915							

Briggs & Stratton Quick X-Reference

Base Gasket	Igition Armature	Diaphragm	Float Valve	Carb. Overhaul	Rod	Mag Oil Seal	PTO Oil Seal	Rings-Std	Starter Pulley	Recoil Spring	Recoil Starter
50-101	33-362 STD, 33-342 ELE	49-037		49-078	36-102	49-040-0	49-040-0		43-100	43-400-0	
50-101	33-362 STD, 33-342 ELE	49-037		49-078	36-102	49-040-0			43-100	43-400-0	
50-101	33-342		49-036		36-102	49-040-0	49-041-0		43-100	43-400-0	
50-101	33-362 STD, 33-342 ELE	49-006			36-102	49-040-0	49-041-0		43-100	43-400-0	
	33-353					49-040-0			31-063	31-063	31-919
50-101	33-362 STD, 33-342 ELE	49-006			36-102	49-040-0	49-041-0		43-100	43-400-0	
						49-040-0	49-204				
50-101	33-342		49-036		36-102	49-040-0	49-041-0		43-100	43-400-0	
50-101	33-342	49-006			36-102	49-040-0	49-041-0		43-100	43-400-0	
			49-359						43-014	43-403	
			49-359								
	33-353					49-040-0					
	33-353					49-040-0					
	33-353					49-040-0					
	33-341					49-040-0	49-204		31-063	31-063	31-068
						49-040-0			43-014	43-403	31-061
49-114	33-341		49-036	49-305	36-102	49-040-0	49-204	36-027	31-063 43-014	31-063 43-403	31-068 31-061
	33-353					49-040-0					
	33-341					49-040-0	49-204		31-063	31-063	31-068
	33-353					49-040-0					
	33-353					49-040-0					
	33-353					49-040-0					
	33-341					49-040-0	49-204		31-063	31-063	31-068
	33-341					49-040-0	49-204	36-027	43-014	43-403	31-061
49-114	33-341		49-036	49-305	36-102	49-040-0	49-204	36-027	31-063 43-014	31-063 43-403	31-068 31-061
	33-353					49-040-0					
	33-353					49-040-0					
	33-353		49-036			49-040-0			31-063	31-063	
	33-353					49-040-0					
	33-341					49-040-0	49-204		31-063	31-063	31-068
49-114	33-341		49-036	49-305	36-102	49-040-0	49-204	36-027	31-063 43-014	31-063 43-403	31-068 31-061
	33-353					49-040-0					
	33-353					49-040-0					
	33-353					49-040-0					
	33-341					49-040-0	49-204		31-063	31-063	31-068
49-114	33-341		49-036	49-305	36-102	49-040-0	49-204	36-027	31-063 43-014	31-063 43-403	31-068 31-061
49-114	33-341		49-036	49-305	36-102	49-040-0	49-204	36-027	31-063 43-014	31-063 43-403	31-068 31-061
	33-341					49-040-0	49-204		31-063	31-063	31-068
49-114	33-341		49-036	49-305	36-102	49-040-0	49-204	36-027	31-063 43-014	31-063 43-403	31-068 31-061
49-114	33-341		49-036		36-102	49-040-0	49-204	36-027	31-063 43-014	31-063 43-403	31-068 31-061
	33-341					49-040-0	49-204		31-063	31-063	31-068
49-114	33-341		49-036	49-305	36-102	49-040-0	49-204	36-027	31-063 43-014	31-063 43-403	31-068 31-061
49-114	33-341		49-036	49-305	36-102	49-040-0	49-204	36-027	31-063 43-014	31-063 43-403	31-068 31-061
	33-353					49-040-0			31-063	31-063	31-919
	33-353					49-040-0			31-063	31-063	31-919
	33-353					49-040-0			31-063	31-063	31-919
	33-341					49-040-0	49-204		31-063	31-063	31-068
	33-341					49-040-0	49-204	36-027	31-063	31-063	31-068
	33-341					49-040-0	49-204	36-027	31-063	31-063	31-068
	33-341					49-040-0	49-204		31-063	31-063	31-068
	33-341					49-040-0	49-204	36-027	31-063	31-063	31-068
49-114	33-341		49-036		36-102	49-040-0	49-204	36-027	31-063 43-014	31-063 43-403	31-068 31-061
	33-341					49-040-0	49-204	36-027	31-063	31-063	31-068
	33-353					49-040-0			31-063	31-063	31-919
	33-341					49-040-0	49-204		31-063	31-063	31-068
						49-040-0			31-063	31-063	31-919
	33-353					49-040-0			31-063	31-063	31-919
	33-341					49-040-0	49-204	36-027	31-063 43-014	31-063 43-403	31-068 31-061
	33-341					49-040-0	49-204		31-063	31-063	31-068
	33-341					49-040-0	49-204	36-027	31-063 43-014	31-063 43-403	31-068 31-061
	33-341					49-040-0	49-204	36-027	31-063	31-063	31-068
	33-341					49-040-0	49-204		31-063	31-063	31-068
	33-341					49-040-0	49-204	36-027	31-063	31-063	31-068
						49-040-0	49-204				
	33-353					49-040-0			31-063	31-063	31-068
						49-040-0	49-204				
						49-040-0	49-204				
						49-040-0	49-204				
	33-353					49-040-0			31-063	31-063	31-919
	33-353					49-040-0			31-063	31-063	31-919
	33-353					49-040-0			31-063	31-063	31-919

X

Briggs & Stratton Quick X-Reference

Model		Foam Air Cleaner	Cartridge	Pre-Cleaner	Air Cleaner Gasket	Carb. Mtg. Gasket	Manifold Gasket	Head Gasket #1	Head Gasket #2	Gasket Set	Valve Cover Gasket
12S500			30-033	30-915							
12S600			30-033	30-915							
12S700											
12S800			30-710	30-927	49-069	49-108		50-441			49-132
12S900			30-172	30-181							
12T100			30-033	30-915							
12T200											
12T300			30-710	30-961							
12T400			30-033	30-915							
12T700			30-710	30-927	49-069	49-108		50-441			49-132
12T800			30-710	30-927	49-069	49-108		50-441			49-132
12U800			30-029	30-930	49-069	49-108		50-441			49-132
12V800			30-029	30-930							
12W800			30-029	30-930							
12X800			30-710	30-961							
12Y800			30-710	30-961							
12Z100											
12Z300											
120200			30-033	30-915							
120300			30-033	30-915							
120400			30-033	30-915							
120500			30-029	30-930	49-069	49-108		50-441			49-132
120600			30-710	30-961							
120H00			30-029	30-930	49-069	49-108		50-441			49-132
120K00											
120L00			30-449								
120T00			30-449								
121A00			30-033	30-915							
121H00			30-029	30-930	49-069	49-108		50-441			49-132
121K00											
121Q00			30-172	30-181							
121R00			30-172	30-181							
121S00			30-172	30-181							
121000			30-033	30-915							
121100			30-710	30-961							
121200			30-033	30-915							
121300	High mount air filter		30-033	30-915							
121300	Flat panel air filter		30-710	30-927							
121400			30-033	30-915							
121600			30-033	30-915	50-438			50-447			
121700			30-710	30-927	49-129	49-108		50-543			49-132
121800			30-710	30-927	49-129	49-108		50-543			49-132
122H00			30-029	30-930	49-069	49-108		50-441			49-132
122K00			30-029	30-930	49-069	49-108		50-441			49-132
122L00			30-710	30-961							
122M00			30-710	30-961							
122Q00			30-172	30-181							
122R00			30-172	30-181							
122S00			30-172	30-181							
122T00			30-710	30-961							
122000			30-033	30-915							
122100											
122200			30-710	30-961							
122300			30-033	30-915							
122400			30-710	30-961							
122600			30-033	30-915				50-447			
122700			30-710	30-927	49-129	49-108		50-543			49-132
122800											
123H00			30-029	30-930	49-069	49-108		50-441			49-132
123J00			30-029	30-930							
123K00			30-029	30-930	49-069	49-108		50-441			49-132
123300			30-033	30-915							
123400			30-033	30-915							
123600			30-033	30-915				50-447			
123700			30-710	30-927	49-129	49-108		50-543			49-132
123800			30-710	30-927	49-129	49-108		50-543			49-132
124H00			30-710	30-961							
124K00			30-710	30-961							
124L00			30-710	30-961							
124Q00			30-172	30-181							
124S00			30-172	30-181							
124T00			30-710	30-961							
124000			30-033	30-915							
124300			30-710	30-961							
124400			30-710	30-961							
124600			30-710	30-961							
124700			30-710	30-927	49-129	49-108		50-543			49-132
124800			30-710	30-927	49-129	49-108		50-543			49-132
125H00			30-710	30-961							

Briggs & Stratton Quick X-Reference

Base Gasket	Igition Armature	Diaphragm	Float Valve	Carb. Overhaul	Rod	Mag Oil Seal	PTO Oil Seal	Rings-Std	Starter Pulley	Recoil Spring	Recoil Starter
	33-341					49-040-0	49-204		31-063	31-063	31-068
	33-341					49-040-0	49-204		31-063	31-063	31-068
	33-341					49-040-0	49-204	36-027	31-063 43-014	31-063 43-403	31-068 31-061
49-114	33-341		49-036	49-305	36-102	49-040-0	49-204	36-027	31-063 43-014	31-063 43-403	31-068 31-061
						49-040-0	49-204				
	33-353					49-040-0			31-063	31-063	31-919
	33-353					49-040-0			31-063	31-063	31-919
	33-353					49-040-0			31-063	31-063	31-919
	33-353					49-040-0			31-063	31-063	31-919
49-114	33-341		49-036	49-305	36-102	49-040-0	49-204	36-027	31-063 43-014	31-063 43-403	31-068 31-061
49-114	33-341		49-036	49-305	36-102	49-040-0	49-204	36-027	31-063 43-014	31-063 43-403	31-068 31-061
49-114	33-341		49-036	49-305	36-102	49-040-0	49-204	36-027	31-063	31-063	31-068
	33-341					49-040-0	49-204	36-027	31-063	31-063	31-068
	33-341					49-040-0	49-204	36-027	31-063	31-063	31-068
	33-341					49-040-0	49-204	36-027	31-063	31-063	31-068
	33-341					49-040-0	49-204	36-027	31-063	31-063	31-068
	33-353					49-040-0	49-204				
	33-353					49-040-0					
	33-353					49-040-0			31-063	31-063	31-919
	33-353					49-040-0			31-063	31-063	31-919
	33-353					49-040-0			31-063	31-063	31-919
49-114	33-341		49-036	49-305	36-102	49-040-0	49-204	36-027	43-014	43-403	
	33-341					49-040-0	49-204				
49-114	33-341		49-036	49-305	36-102	49-040-0	49-204	36-027	31-063	31-063	31-068
	33-341					49-040-0	49-204		31-063	31-063	31-068
	33-341					49-040-0	49-204		31-063	31-063	31-068
	33-341					49-040-0	49-204		31-063	31-063	31-068
	33-353					49-040-0			31-063	31-063	31-919
49-114	33-341		49-036	49-305	36-102	49-040-0	49-204	36-027	31-063	31-063	31-068
	33-341					49-040-0	49-204		31-063	31-063	31-068
						49-040-0	49-204				
						49-040-0	49-204				
						49-040-0	49-204				
	33-353					49-040-0			31-063	31-063	31-919
	33-353					49-040-0			31-063	31-063	31-919
	33-353					49-040-0			31-063	31-063	31-919
	33-353		49-036			49-040-0			31-063	31-063	31-919
	33-353		49-036			49-040-0			31-063	31-063	31-919
	33-353					49-040-0			31-063	31-063	31-919
	33-341					49-040-0	49-204		31-063	31-063	31-068
49-114	33-341		49-036		36-102	49-040-0	49-204		43-014	43-403	31-061
49-114	33-341		49-036	49-305	36-102	49-040-0	49-204		43-014	43-403	31-061
49-114	33-341		49-036	49-305	36-102	49-040-0	49-204	36-027	31-063	31-063	31-068
49-114	33-341		49-036	49-305	36-102	49-040-0	49-204	36-027	31-063	31-063	31-068
	33-341					49-040-0	49-204		31-063	31-063	31-068
	33-341					49-040-0	49-204		31-063	31-063	31-068
	33-341					49-040-0	49-204		31-063	31-063	31-068
						49-040-0	49-204				
						49-040-0	49-204				
						49-040-0	49-204				
	33-341					49-040-0	49-204		31-063	31-063	31-068
	33-353					49-040-0			31-063	31-063	31-919
	33-353					49-040-0			31-063	31-063	31-919
	33-353					49-040-0			31-063	31-063	31-919
	33-353					49-040-0			31-063	31-063	31-919
	33-353					49-040-0			31-063	31-063	31-919
	33-353					49-040-0			31-063	31-063	31-919
	33-341					49-040-0	49-204		31-063	31-063	31-068
49-114	33-341		49-036		36-102	49-040-0	49-204		43-014	43-403	31-061
	33-341					49-040-0	49-204		43-014	43-403	31-061
49-114	33-341		49-036	49-305	36-102	49-040-0	49-204	36-027	31-063	31-063	31-068
	33-341					49-040-0	49-204	36-027	31-063	31-063	31-068
49-114	33-341		49-036	49-305	36-102	49-040-0	49-204	36-027	31-063	31-063	31-068
	33-353		49-036			49-040-0			31-063	31-063	
	33-341					49-040-0					
	33-341					49-040-0	49-204		31-063	31-063	31-068
49-114	33-341		49-036	49-305	36-102	49-040-0	49-204		43-014	43-403	31-061
49-114	33-341		49-036	49-305	36-102	49-040-0	49-204		43-014	43-403	31-061
	33-341					49-040-0	49-204	36-027	31-063	31-063	31-068
	33-341					49-040-0	49-204	36-027	31-063	31-063	31-068
	33-341					49-040-0	49-204		31-063	31-063	31-068
						49-040-0	49-204				
						49-040-0	49-204				
	33-341					49-040-0	49-204		31-063	31-063	31-068
	33-353								31-063	31-063	31-919
	33-353					49-040-0			31-063	31-063	31-919
	33-353					49-040-0			31-063	31-063	31-919
	33-341					49-040-0	49-204		31-063	31-063	31-068
49-114	33-341		49-036		36-102	49-040-0	49-204		43-014	43-403	31-061
49-114	33-341		49-036	49-305	36-102	49-040-0	49-204		43-014	43-403	31-061
	33-341					49-040-0	49-204	36-027	31-063	31-063	31-068

Briggs & Stratton Quick X-Reference

Model		Foam Air Cleaner	Cartridge	Pre-Cleaner	Air Cleaner Gasket	Carb. Mtg. Gasket	Manifold Gasket	Head Gasket #1	Head Gasket #2	Gasket Set	Valve Cover Gasket
125K00			30-710	30-961							
125600			30-710	30-961							
125700			30-710	30-927	49-129	49-108		50-543			49-132
126K00			30-710	30-961							
126L00			30-710	30-961							
126M00			30-710	30-961							
126T00			30-710	30-961							
126300	High mount air filter		30-033	30-915							
126300	Flat panel air filter		30-710	30-927							
126400			30-033	30-915							
126600			30-033	30-915							
126700			30-710	30-927	49-129	49-108		50-543			49-132
126800			30-710	30-927	49-129	49-108		50-543			49-132
127300			30-033	30-915							
127400			30-033	30-915							
127600											
127700			30-710	30-927	49-069	49-108		50-543			49-132
127800			30-710	30-927	49-069	49-108		50-543			49-132
127H00			30-710	30-961							
128300			30-033	30-915							
128400			30-033	30-915							
128600			30-033	30-915							
128700			30-710	30-927	49-069	49-108		50-543			49-132
128800			30-710	30-927	49-069	49-108		50-543			49-132
128H00			30-710	30-961							
128L00			30-710	30-961							
128M00			30-710	30-961							
128T00			30-710	30-961							
129600			30-033	30-915							
129700			30-710	30-927	49-069	49-108		50-543			49-132
129800			30-710	30-927	49-069	49-108		50-543			49-132
129H00			30-710	30-961							
13H100			30-173								
13H300			30-173								
13L100			30-173								
13L300			30-173								
130200	2300 or less, 5100-5199	30-906	30-094	30-923	49-131	49-355		50-542		50-410	49-107
130200	2900-4100, 5200-5600		30-710	30-927	49-131	49-355		50-542		50-410	49-107
130400			30-094	30-923	49-131	49-355		50-542		50-410	49-107
130700			30-700	30-038	49-129	49-311		50-542		50-411	49-107
130900		30-910	30-094	30-923	49-131	49-311		50-542		50-411	49-107
131200		30-906	30-094	30-923	49-131	49-099		50-542		50-410	49-107
131400			30-094	30-923	49-131	49-355		50-542		50-410	49-107
131700			30-700	30-038	49-129	49-311		50-542		50-411	49-107
131900			30-094	30-923	49-131	49-311		50-542		50-411	49-107
132200	0100-0300, 2000-2200		30-094	30-923	49-131	49-355		50-542		50-410	49-107
132200	0301-0499, 200-2299, 4000 or greater		30-710	30-927		49-095		50-542		50-410	49-107
132400			30-094	30-923	49-131	49-355		50-542		50-410	49-107
132900			30-094	30-923	49-131	49-311		50-542		50-411	49-107
133200			30-310	30-927		49-095		50-542		50-410	49-107
133400			30-735	30-928		49-095		50-542			49-107
133700			30-310	30-927	49-069	49-311		50-542			49-107
134200			30-310	30-927							
134400			30-735	30-928							
135200			30-094	30-923		49-095		50-542		50-410	49-107
135400			30-735	30-928							
135700			30-710	30-927	49-069	49-311		50-542			49-107
136200			30-094	30-923		49-095		50-542		50-410	49-107
137200			30-310	30-927							
138400			30-710	30-927							
14B900			30-172	30-181							
144201											
144402											
144701											
145201											
145401											
145701											
146400		30-916	30-097								49-112
146700		30-909									49-112
147400		30-913									
147700		30-909									
15A100	Powerbuilt snow										
15B100	Intek snow										
152C100											
15D100											
15R100											

X

Briggs & Stratton Quick X-Reference

Base Gasket	Igition Armature	Diaphragm	Float Valve	Carb. Overhaul	Rod	Mag Oil Seal	PTO Oil Seal	Rings-Std	Starter Pulley	Recoil Spring	Recoil Starter
	33-341					49-040-0	49-204	36-027	31-063	31-063	31-068
	33-341					49-040-0	49-204		31-063	31-063	31-068
49-114	33-341		49-036		36-102	49-040-0	49-204		43-014	43-403	31-061
	33-341					49-040-0	49-204		31-063	31-063	31-068
	33-341					49-040-0	49-204		31-063	31-063	31-068
	33-341					49-040-0	49-204		31-063	31-063	31-068
	33-341					49-040-0	49-204		31-063	31-063	31-068
	33-353		49-036			49-040-0			31-063	31-063	31-919
	33-353		49-036			49-040-0			31-063	31-063	31-919
	33-353					49-040-0			31-063	31-063	31-919
	33-341					49-040-0	49-204		31-063	31-063	31-068
49-114	33-341		49-036	49-305	36-102	49-040-0	49-204		43-014	43-403	31-061
49-114	33-341		49-036	49-305	36-102	49-040-0	49-204		43-014	43-403	31-061
	33-353					49-040-0			31-063	31-063	31-919
	33-353					49-040-0			31-063	31-063	31-919
	33-341					49-040-0	49-204		31-063	31-063	31-068
49-114	33-341		49-036	49-305	36-102	49-040-0	49-204	36-027	31-063 43-014	31-063 43-403	31-068 31-061
49-114	33-341		49-036	49-305	36-102	49-040-0	49-204	36-027	31-063 43-014	31-063 43-403	31-068 31-061
	33-341								31-063	31-063	31-068
	33-353					49-040-0			31-063	31-063	31-919
	33-353					49-040-0			31-063	31-063	31-919
	33-341					49-040-0			31-063	31-063	31-068
49-114	33-341		49-036	49-305	36-102	49-040-0		36-027	31-063 43-014	31-063 43-403	31-068 31-061
49-114	33-341		49-036	49-305	36-102	49-040-0	49-204	36-027	31-063 43-014	31-063 43-403	31-068 31-061
	33-341					49-040-0	49-204		31-063	31-063	31-068
	33-341					49-040-0	49-204		31-063	31-063	31-068
	33-341					49-040-0	49-204		31-063	31-063	31-068
	33-341					49-040-0	49-204		31-063	31-063	31-068
	33-341					49-040-0	49-204		31-063	31-063	31-068
49-114	33-341		49-036	49-305	36-102	49-040-0	49-204	36-027	31-063 43-014	31-063 43-403	31-068 31-061
49-114	33-341		49-036	49-305	36-102	49-040-0	49-204	36-027	31-063 43-014	31-063 43-403	31-068 31-061
	33-341					49-040-0	49-204	36-027	31-063	31-063	31-068
						49-040-0	49-204				
						49-040-0	49-204				
						49-040-0	49-204				
						49-040-0	49-204				
50-102	33-340	49-037		49-078	36-100	49-040-0			43-200	43-400-0	
50-102	33-340	49-037		49-078	36-100	49-040-0			43-200	43-400-0	
50-102	33-340				36-100	49-040-0	49-060		43-200	43-400-0	
50-102	33-340		49-036	49-145	36-100	49-040-0	49-049		43-200	43-400-0	
50-102	33-340	49-037		49-076	36-100	49-040-0	49-049		43-200	43-400-0	
50-102	33-340	49-037		49-078	36-100	49-040-0			43-200	43-400-0	
50-102	33-340				36-100	49-040-0			43-200	43-400-0	
50-103	33-340		49-036	49-145	36-100	49-060	49-049		43-200	43-400-0	
50-103	33-340	49-037		49-076	36-100	49-040-0	49-049		43-200	43-400-0	
50-102	33-340	49-037		49-078	36-100	49-040-0	49-049		43-200	43-400-0	
50-102	33-340	49-037		49-078	36-100	49-040-0	49-049		43-200	43-400-0	
50-102	33-340		49-385		36-100	49-040-0	49-049		43-200	43-400-0	
50-103	33-340	49-037		49-076	36-100	49-040-0	49-049		43-200	43-400-0	
50-102	33-340	49-037			36-100	49-040-0	49-060		43-014	43-403	31-062
50-102	33-340		49-036	49-305	36-100	49-040-0	49-060		43-014	43-403	31-062
50-103	33-340		49-036	49-305	36-100	49-040-0	49-049		43-014	43-403	31-062
	33-340					49-040-0			43-014	43-403	31-062
	33-340					49-040-0					
50-102	33-340	49-037			36-100	49-040-0	49-049	36-028	43-014	43-403	31-062
	33-340					49-040-0					
50-103	33-340		49-036	49-305	36-100	49-040-0	49-049		43-014	43-403	31-062
50-102	33-340	49-037			36-100	49-046	49-048	36-028	43-014	43-403	31-062
	33-340					49-040-0		36-028	43-014	43-403	31-062
30-962											
						49-040-0	49-204				
	33-365										
	33-365										
	33-365										
	33-365										
	33-365										
	33-365										
50-104	33-365			49-693		49-040-0	49-060		43-200	43-400-0	
50-104	33-365			49-693		49-040-0	49-060		43-200	43-400-0	
50-104	33-365			49-693		49-040-0	49-060			43-400-0	
50-104	33-365			49-693		49-040-0	49-049			43-400-0	
	33-353		49-036			49-040-0			31-063	31-063	
	33-353		49-036			49-040-0			31-063	31-063	
	33-353					49-040-0					
	33-353					49-040-0					
	33-353					49-040-0					

X

Briggs & Stratton Quick X-Reference

Model		Foam Air Cleaner	Cartridge	Pre-Cleaner	Air Cleaner Gasket	Carb. Mtg. Gasket	Manifold Gasket	Head Gasket #1	Head Gasket #2	Gasket Set	Valve Cover Gasket
15T100			30-710	30-961							
15T200			30-710	30-961							
15Z100											
15Z300											
150100			30-710	30-961							
150200			30-710	30-961							
150300			30-710	30-961							
157100			30-710	30-961							
157200			30-710	30-961							
157300			30-710	30-961							
161400			30-731	30-928							
170400	0500-1999	30-913	30-097	30-920		49-126		50-541		50-409	49-112
170400	2000 or greater	30-916	30-097	30-920		49-126		50-541		50-409	49-112
170700		30-909	30-106			49-098		50-541		50-409	49-112
171400			30-097	30-920		49-126		50-541		50-409	49-112
171700		30-909						50-541			
176400			30-028	30-928				50-541			49-112
185400			30-762	30-962							
187400			30-762	30-962							
19A400			30-028	30-928							
19B400			30-028	30-928				50-541			49-112
19C400			30-028	30-928							
19E400			30-028	30-928				50-541			49-112
19F400			30-028	30-928				50-541			49-112
19G400			30-028	30-928				50-541			49-112
19H100											
19H200											
19K400			30-028	30-928							
19L100											
19L200											
190400	0010-2100	30-916	30-097	30-920		49-126		50-541		50-409	49-112
190400	2500 or greater		30-097	30-920		49-126		50-541		50-409	49-112
190700		30-909	30-106			49-098		50-541		50-409	49-112
191400		30-916									
191700		30-909	30-106			49-098		50-541		50-409	49-112
192400			30-028	30-928				50-541			49-112
192700		30-909	30-106					50-541		50-409	49-112
193400		30-916									
193700		30-909	30-106					50-541		50-409	49-112
194400			30-044	30-920		49-126		50-541		50-409	49-112
194700		30-960	30-048	30-926				50-541		50-409	49-112
195400	0100-0400, 2000-2099		30-044	30-920		49-126		50-541		50-409	49-112
195400	0600-1999, 2100 or greater		30-044	30-920		49-126		50-541		50-409	49-112
195700		30-960	30-048	30-926				50-541		50-409	49-112
196400			30-028	30-928				50-541			49-112
196700		30-960	30-048	30-926				50-541		50-409	49-112
197400			30-028	30-928							
197700			30-048	30-926			49-119				
198700			30-048	30-926			49-119				
20A113											
20A400	Intek snow										
20B400											
20C100											
20D400	Intek snow										
20E300											
20F400	Intek snow										
20G400											
20H100			30-310	30-927							
20H200			30-310	30-927							
20L100			30-310	30-927							
20L200			30-310	30-927							
20M100											
20M200											
20M300											
20M400											
20P200											
20P400											
20S100			30-310	30-927							
20S200			30-310	30-927							
20T100			30-310	30-927							
20T200			30-310	30-927							
20X300											
200400		30-916						50-106			49-112
201300			30-310	30-927							
201400	Powerbuilt		30-710	30-927	50-442						
202300			30-310	30-927							
202400	Flat panel air filter		30-710	30-927	50-442						
202400	High mount air filter		30-135	30-976							
203400	Flat panel air filter		30-710	30-927	50-442						
203400	High mount air filter		30-135	30-976							
204300			30-310	30-927							
204400			30-710	30-927	50-442						

Base Gasket	Igition Armature	Diaphragm	Float Valve	Carb. Overhaul	Rod	Mag Oil Seal	PTO Oil Seal	Rings-Std	Starter Pulley	Recoil Spring	Recoil Starter
	33-353					49-040-0			31-063	31-063	31-919
	33-353					49-040-0			31-063	31-063	31-919
	33-353					49-040-0					
	33-353					49-040-0					
	33-353		49-036			49-040-0			31-063	31-063	31-919
	33-353					49-040-0			31-063	31-063	31-919
	33-353					49-040-0			31-063	31-063	31-919
	33-353					49-040-0			31-063	31-063	31-919
	33-353					49-040-0			31-063	31-063	31-919
	33-353					49-040-0			31-063	31-063	31-919
	33-347										
50-104	33-365		49-033	49-693		49-046	49-045		43-200	43-400-0	
50-104	33-344		49-033	49-693		49-046	49-045		31-063	31-063	31-065
50-104	33-365		49-033	49-102		49-046	49-045		31-063	31-063	31-065
50-104	33-344		49-033	49-693		49-046	49-045		31-063	31-063	31-065
50-104	33-365		49-033	49-102		49-046	49-045		31-063	31-063	31-065
50-104	33-344			49-148		49-045	49-045		31-063	31-063	31-065
	33-365		49-361								
	33-347								31-063	31-063	31-065
50-104	33-347			49-148	36-103	49-045	49-045		31-063	31-063	31-065
	33-347										
50-104	33-347				36-103	49-045	49-045		31-063	31-063	31-065
50-104	33-347				36-103	49-045	49-045		31-063	31-063	31-065
50-104	33-347				36-103	49-045	49-045		31-063	31-063	31-065
	33-347										
	33-347										
	33-344								31-063	31-063	31-065
	33-347										
	33-347										
50-104	33-365		49-033	49-693	36-103	49-046	49-045		43-200	43-400-0	
50-104	33-344		49-033		36-103	49-046	49-045		31-063	31-063	31-065
50-104	33-344		49-033	49-102	36-103	49-046	49-045		31-063	31-063	31-065
50-104	33-344		49-033	49-102	36-103	49-046	49-045		31-063	31-063	31-065
50-104	33-344			49-148	36-103	49-045	49-045		31-063	31-063	31-065
50-104	33-344		49-033	49-102	36-103	49-046	49-045		31-063	31-063	31-065
	33-365										
50-104	33-344		49-033	49-102	36-103	49-046	49-045		31-063	31-063	31-065
50-104	33-344		49-033		36-103	49-046	49-045		31-063	31-063	31-065
50-104	33-344			49-147	36-103	49-046	49-045		31-063	31-063	31-065
50-104	33-344		49-033	49-693	36-103	49-046	49-045		43-200	43-400-0	
50-104	33-344		49-033	49-693	36-103	49-046	49-045		31-063	31-063	31-065
50-104	33-344			49-147	36-103	49-046	49-045		31-063	31-063	31-065
50-104	33-344			49-148	36-103	49-045	49-045		31-063	31-063	31-065
50-104	33-344			49-147	36-103	49-046	49-045		31-063	31-063	31-065
	33-344								31-063	31-063	31-065
	33-344			49-147					31-063	31-063	31-065
	33-344			49-147					31-063	31-063	31-065
	33-347										
	33-347					49-045	49-045		31-063	31-063	
	33-347										
	33-347										
	33-347					49-045	49-045		31-063	31-063	
	33-347										
	33-347					49-045	49-045		31-063	31-063	
	33-347										
	33-347										
	33-347										
	33-347										
	33-347										
	33-347										
	33-347										
	33-347										
	33-347										
	33-347										
	33-347										
	33-347										
	33-347										
50-106	33-365		49-033	49-693		49-045	49-045		43-200	43-400-0	
	33-347										
	33-347					49-045	49-045		31-063	31-063	
	33-347										
	33-347					49-045	49-045		31-063	31-063	
	33-347					49-045	49-045		31-063	31-063	
	33-347					49-045	49-045		31-063	31-063	
	33-347					49-045	49-045		31-063	31-063	
	33-347										
	33-347					49-045	49-045		31-063	31-063	31-068

Briggs & Stratton Quick X-Reference

Model		Foam Air Cleaner	Cartridge	Pre-Cleaner	Air Cleaner Gasket	Carb. Mtg. Gasket	Manifold Gasket	Head Gasket #1	Head Gasket #2	Gasket Set	Valve Cover Gasket
205300			30-310	30-927							
205400	Flat panel air filter		30-710	30-927	50-442						
205400	High mount air filter		30-135	30-976							
206400	Intek pro		30-135	30-976							
207400											
21A100											
21A400											
21A700			30-073	30-077				50-435			
21A800			30-073	30-077				50-435			
21A900			30-073	30-077				50-435			
21B400											
21B700			30-073	30-077							
21B800			30-073	30-077				50-435			
21B900	Intek		30-073	30-077				50-435			
21C100											
21C200											
21C300											
21D800			30-852								
21M100											
21M200											
21M300											
21M400											
21P214											
21R500											
21R600											
21R700											
21R800											
21S100			30-310	30-927							
21S200			30-310	30-927							
21T100			30-310	30-927							
21T200			30-310	30-927							
21X300											
21Z100											
21Z300											
210300			30-310	30-927							
210400	Flat panel air filter		30-710	30-927	50-442						
210400	High mount air filter		30-135	30-976							
210700			30-073	30-077				50-435			
210800			30-073	30-077				50-435			
212300			30-310	30-927							
212400			30-310	30-927							
212700			30-073	30-077				50-435			
212800			30-073	30-077				50-435			
212900			30-073	30-077				50-435			
213400			30-310	30-927							
214700			30-073	30-077				50-435			
214900			30-073	30-077				50-435			
215700	Powerbuilt		30-073	30-077				50-435			49-161
215800			30-073	30-077				50-435			
215900	Intek		30-073	30-077				50-435			
216100											
216300			30-310	30-927							
216700			30-073	30-077							
216800			30-073	30-077							
216900			30-073	30-077				50-435			
217300			30-310	30-927							
217700			30-073	30-077							
217800			30-073	30-077				50-435			
217900	Intek		30-073	30-077				50-435			
218700			30-073	30-077				50-435			
218800			30-073	30-077							
219700	Powerbuilt		30-073	30-077				50-435			
219800			30-073	30-077				50-435			
219900			30-073	30-077				50-435			
220400			30-044	30-920				50-025			49-112
220700		30-911	30-105		49-410			50-025		49-412	49-112
221400			30-044	30-920				50-025			49-112
222400			30-044	30-920				50-025			49-112
226400			30-028	30-928				50-025			49-112
231400		30-916									
233400	0010-0350	30-916	30-916			49-118					49-112
233400	0500 or greater	30-916	30-044	30-920		49-118					49-112
235400			30-762	30-962							
243400		30-916	30-044	30-920		49-118					49-112
245400			30-762	30-962							
246400			30-310	30-927							
247400			30-762	30-962							
250400			30-028	30-928							
251400			30-044	30-920				50-025			49-112
251700		30-911						50-025			49-112
252400			30-044	30-920				50-025			49-112

X

Base Gasket	Igition Armature	Diaphragm	Float Valve	Carb. Overhaul	Rod	Mag Oil Seal	PTO Oil Seal	Rings-Std	Starter Pulley	Recoil Spring	Recoil Starter
	33-347										
	33-347					49-045	49-045		31-063	31-063	31-068
	33-347					49-045	49-045		31-063	31-063	31-068
	33-347					49-045	49-045		31-063	31-063	
	33-347										
	33-347										
	33-347										
	33-347					49-045					
	33-347					49-045					
	33-347					49-045					
	33-347										
	33-347										
	33-347					49-045					
	33-347					49-045					
	33-347										
	33-347										
	33-347										
	33-347										
	33-347										
	33-347										
	33-347										
	33-347										
	33-347										
	33-347										
	33-347										
	33-347										
	33-347										
	33-347										
	33-347										
	33-347										
	33-347										
	33-347										
	33-347					49-045	49-045		31-063	31-063	
	33-347					49-045	49-045		31-063	31-063	
	33-347					49-045					
	33-347					49-045					
	33-347										
	33-347										
	33-347					49-045					
	33-347					49-045					
	33-347					49-045					
	33-347										
	33-347					49-045					
	33-347					49-045					
	33-347		49-210 Walbro			49-045					
	33-347					49-045					
	33-347					49-045					
	33-347										
	33-347										
	33-347										
	33-347										
	33-347					49-045					
	33-347										
	33-347										
	33-347					49-045					
	33-347					49-045					
	33-347					49-045					
	33-347										
	33-347					49-045					
	33-347					49-045					
	33-347					49-045					
	33-344		49-033	49-071		49-045	49-047	36-005	31-063	31-063	31-065
50-105	33-344		49-033	49-102		49-045	49-047	36-005	31-063	31-063	31-065
	33-344		49-033	49-071		49-045	49-047	36-005	31-063	31-063	31-065
	33-344		49-033	49-071		49-045	49-047	36-005	43-200	43-400-0	
	33-344					49-045	49-047		31-063	31-063	31-065
	33-344			49-693		49-045	49-045		43-200	43-400-0	
	33-344		49-033	49-693		49-040-0	49-045			43-400-0	
	33-344		49-033	49-693		49-040-0	49-045			43-400-0	
	33-347					49-047	49-047				
	33-344		49-033	49-071		49-040-0	49-047			43-400-0	
	33-347					49-047	49-047				
	33-347										
	33-347										
	33-344								31-063	31-063	31-065
	33-344		49-033	49-071	36-104	49-045	49-047	36-005	31-063	31-063	31-065
50-105	33-344			49-102	36-104	49-045	49-047	36-005	31-063	31-063	31-065
50-105	33-344		49-033	49-071	36-104	49-045	49-047	36-005	31-063	31-063	31-065

X

Briggs & Stratton Quick X-Reference

Model		Foam Air Cleaner	Cartridge	Pre-Cleaner	Air Cleaner Gasket	Carb. Mtg. Gasket	Manifold Gasket	Head Gasket #1	Head Gasket #2	Gasket Set	Valve Cover Gasket
252700		30-911	30-105		49-410			50-025		49-412	49-112
253400											49-112
253700		30-911	30-105	90-924	49-410			50-025		49-412	49-112
254400			30-044	30-920				50-025			49-112
254700		30-960						50-025		49-412	49-112
255400											49-112
255700		30-911			49-410			50-025		49-412	49-112
256400			30-028	30-928				50-025			49-112
256700		30-911	30-105	30-924	49-410	49-119		50-025		49-412	49-112
257400			30-028	30-928							
257700		30-960	30-048	30-926		50-443	49-119	50-025		49-412	49-112
258700		30-960				50-443	49-119	50-025		49-412	49-112
259700			30-048	30-926		50-443	49-119	50-025		49-412	49-112
260700			30-134	30-444							
261700			30-134	30-444							
28A700			30-048	30-926		50-443	49-119	50-025		50-412	49-112
28B700			30-048	30-926		50-443	49-119	50-025		50-412	49-112
28C700			30-048	30-926		50-443	49-119	50-025		50-412	49-112
28D700			30-048	30-926		50-443	49-119	50-025		50-412	49-112
28E700			30-049	30-925		50-443	49-119			50-412	
28M700			30-049	30-925		50-443	49-119	50-025		50-412	49-112
28N700			30-049	30-925		50-443	49-119	50-435			
28P700			30-049	30-925		50-443	49-119	50-435			
28Q700			30-049	30-925		50-443	49-119	50-435			
28R700			30-049	30-925		50-443	49-119	50-435			
28S700			30-049	30-925		50-443	49-119	50-435			
28T700			30-049	30-925		50-443	49-119	50-435			
28U700			30-049	30-925		50-443	49-119	50-435			
28V700			30-049	30-925		50-443	49-119	50-435			
28W700			30-049	30-925							
280H00	Intek I/C		30-074 (non-washable) 30-122 (washable)	30-076		49-165		50-435			49-161
280J00			30-074 (non-washable) 30-122 (washable)	30-076							
280700			30-107	30-924	49-410	49-119		50-025		50-412	49-112
281H00			30-074 (non-washable) 30-122 (washable)	30-076							
281700			30-107	30-924	49-410	49-119		50-025		50-412	49-112
282H00			30-074 (non-washable) 30-122 (washable)	30-076							
282700			30-049	30-925				50-025		50-412	49-112
283H00			30-074 (non-washable) 30-122 (washable)	30-076							
283700			30-049	30-925				50-025		50-412	49-112
284H00			30-074 (non-washable) 30-122 (washable)	30-076							
284700			30-049	30-925				50-025		50-412	49-112
28Ch00	Extende life		30-122	30-076		49-165		50-435			49-161
285H00	Intek I/C		30-074 (non-washable) 30-122 (washable)	30-076		49-165		50-435			49-161
285700			30-049	30-925				50-025		50-412	49-112
286H00			30-074 (non-washable) 30-122 (washable)	30-076							
286700			30-049	30-925				50-025		50-412	49-112
287700			30-049	30-925							
288700			30-049	30-925				50-025		50-412	49-112
289700			30-049	30-925				50-025		50-412	49-112
290400			30-044	30-920							
290700			30-101 round 30-736 rectangle	30-929 round 30-450 rectangle							
294400			30-044	30-920			50-439				
294700			30-101 round 30-736 rectangle	30-929 round 30-450 rectangle			50-439				
295347			30-101	30-929							
295400			30-101	30-929							
295700			30-101	30-929							
296400			30-101	30-929							
297300			30-101	30-929							
297400			30-101	30-929							
300400		30-916				49-118					49-112
301400			30-044	30-920							
302400			30-044	30-920		49-118					49-112
303400			30-044	30-920							
303700			30-101 round 30-736 rectangle	30-929 round 30-450 rectangle							
304400			30-101	30-929							
305400			30-101	30-929			50-439	49-173	49-173		49-172
305700			30-101 round 30-736 rectangle	30-929 round 30-450 rectangle			50-439	49-173	49-173		49-172
309400			30-101	30-929							
31A500			30-074 (non-washable) 30-122 (washable)	30-076							
31A600			30-074 (non-washable) 30-122 (washable)	30-076							

Briggs & Stratton Quick X-Reference

Base Gasket	Igition Armature	Diaphragm	Float Valve	Carb. Overhaul	Rod	Mag Oil Seal	PTO Oil Seal	Rings-Std	Starter Pulley	Recoil Spring	Recoil Starter
50-105	33-344		49-033	49-102	36-104	49-045	49-047	36-005	31-063	31-063	31-065
50-105	33-344		49-033		36-104	49-045	49-047	36-005	31-063	31-063	31-065
50-105	33-344		49-033	49-102	36-104	49-045	49-047	36-022	31-063	31-063	31-065
	33-344		49-033	49-989	36-104	49-045	49-047	36-022	31-063	31-063	31-065
50-105	33-344				36-104	49-045	49-047	36-005	31-063	31-063	31-065
	33-344		49-033		36-104	49-045	49-047	36-022	43-200	43-400-0	
50-105	33-347		49-033	49-102	36-104	49-045	49-047	36-005	31-063	31-063	31-065
	33-344				36-104	49-045	49-047		31-063	31-063	31-065
50-105	33-344		49-033		36-104	49-045	49-047	36-022	31-063	31-063	31-065
	33-344								31-063	31-063	31-065
50-105	33-344				36-104	49-045	49-047	36-005	31-063	31-063	31-065
50-105	33-344				36-104	49-045	49-047	36-005	31-063	31-063	31-065
50-105	33-344				36-104	49-045	49-047	36-005	43-200	43-400-0	
	33-347					49-045	49-047			43-400-0	
	33-347										
49-115	33-347			49-146	36-104	49-045	49-047	36-005	31-063	31-063	31-065
49-115	33-347			49-146	36-104	49-045	49-047	36-005	31-063	31-063	31-065
49-115	33-347			49-146	36-104	49-045	49-047	36-005	31-063	31-063	31-065
49-115	33-347			49-146	36-104	49-045	49-047		31-063	31-063	31-065
49-115	33-347			49-146		49-045	49-047				
49-115	33-347				36-104	49-045	49-047	36-005	31-063	31-063	31-065
49-115	33-347					49-045	49-047		31-063	31-063	31-065
49-115	33-347					49-045	49-047				
49-115	33-347					49-045	49-047				
49-115	33-347					49-045	49-047				
49-115	33-347					49-045	49-047				
49-115	33-347					49-045	49-047				
49-115	33-347					49-045	49-047				
49-115	33-347					49-045	49-047				
	33-347										
	33-347		49-210 Walbro			49-045					
	33-347										
49-115	33-347		49-033	49-102	36-104	49-045	49-047	36-005	43-200	43-400-0	
	33-347										
49-115	33-347		49-033	49-102	36-104	49-045	49-047		31-063	31-063	31-065
	33-347										
49-115	33-347			49-146	36-104	49-045	49-047	36-005			
	33-347										
49-115	33-347			49-146	36-104	49-045	49-047		31-063	31-063	31-065
	33-347										
49-115	33-347			49-146	36-104	49-045	49-047				
	33-347		49-210 Walbro			49-045					
	33-347		49-210 Walbro			49-045					
49-115	33-347			49-146	36-104	49-045	49-047	36-005			
	33-347										
49-115	33-347			49-146	36-104	49-045	49-047		31-063	31-063	31-065
49-115	33-347					49-045	49-047		31-063	31-063	31-065
49-115	33-347				36-104	49-045	49-047	36-005			
49-115	33-347				36-104	49-045	49-047	36-005	31-063	31-063	31-065
	33-347										
	33-347										
	33-347										
	33-347										
	33-365		49-033								
	33-365										
	33-365		49-033	49-071						43-400-0	
	33-347										
	33-347										
	33-347										
49-162	33-347					49-169	49-168				
49-162	33-347					49-169	49-168				
	33-347										
	33-347										
	33-347										

X

Briggs & Stratton Quick X-Reference

Model		Foam Air Cleaner	Cartridge	Pre-Cleaner	Air Cleaner Gasket	Carb. Mtg. Gasket	Manifold Gasket	Head Gasket #1	Head Gasket #2	Gasket Set	Valve Cover Gasket
31A700			30-074 (non-washable) 30-122 (washable)	30-076							
31B700			30-074 (non-washable) 30-122 (washable)	30-076							
31C700			30-074 (non-washable) 30-122 (washable)	30-076							
31D700			30-074 (non-washable) 30-122 (washable)	30-076							
31E500			30-074 (non-washable) 30-122 (washable)	30-076							
31E600			30-074 (non-washable) 30-122 (washable)	30-076							
31E700			30-074 (non-washable) 30-122 (washable)	30-076							
31E800			30-167	30-448							
31F700			30-074 (non-washable) 30-122 (washable)	30-076							
31G700	Intek		30-074 (non-washable) 30-122 (washable)	30-076		49-165					49-161
31H700			30-074 (non-washable) 30-122 (washable)	30-076							
31L700	Extended life		30-074 (non-washable) 30-122 (washable)	30-076		49-165					49-161
31M700			30-074 (non-washable) 30-122 (washable)	30-076							
31M900			30-074 (non-washable) 30-122 (washable)	30-076							
31N600			30-074 (non-washable) 30-122 (washable)	30-076							
31N700	Intek I/C		30-074 (non-washable) 30-122 (washable)	30-076		49-165					49-161
31P600			30-074 (non-washable) 30-122 (washable)	30-076							
31P700			30-074 (non-washable) 30-122 (washable)	30-076							
31P800			30-074 (non-washable) 30-122 (washable)	30-076							
31P900			30-074 (non-washable) 30-122 (washable)	30-076							
31Q500											
31Q600			30-074 (non-washable) 30-122 (washable)	30-076							
31Q700	Extended life		30-074 (non-washable) 30-122 (washable)	30-076		49-165					49-161
31R500											
31R700											
31R900											
31S700			30-167	30-448							
31S800			30-167	30-448							
31S900			30-167	30-448							
31X700											
310700			30-049	30-925							
311700			30-049	30-925							
312700			30-049	30-925							
313700			30-049	30-925							
319700			30-074 (non-washable) 30-122 (washable)	30-076							
320400						49-118					49-112
325400			30-044	30-920							
326400			30-044	30-920		49-118					49-112
33M600			30-167	30-448							
33M700			30-167	30-448							
33M900			30-167	30-448							
33R700			30-167	30-448							
33R800			30-167	30-448							
33S700			30-167	30-448							
33S800			30-167	30-448							
331700			30-167	30-448							
331800			30-167	30-448							
331900			30-167	30-448							
350400			30-101	30-929							
350700	Vanguard		30-101 round 30-736 rectangle	30-929 round 30-450 rectangle							
351400			30-101	30-929							
351700	Vanguard		30-101	30-929							
354400			30-101	30-929							
356400			30-044	30-920							
356700	Vanguard		30-101	30-929			50-439				49-172
358700	Vanguard		30-087	30-929			50-439				49-172
359400				30-929							
380400			30-087	30-974							
380700	Vanguard		30-087	30-974							49-172
381400			30-087	30-974							
381700			30-087	30-974							
384400				30-929			50-439				
385400	Vanguard		30-087	30-974							49-172

X

Base Gasket	Igition Armature	Diaphragm	Float Valve	Carb. Overhaul	Rod	Mag Oil Seal	PTO Oil Seal	Rings-Std	Starter Pulley	Recoil Spring	Recoil Starter
	33-347										
	33-347										
	33-347										
	33-347										
	33-347										
	33-347										
	33-347										
	33-347										
	33-347		49-210 Walbro			49-045					
	33-347										
	33-347		49-210 Walbro			49-045					
	33-347										
	33-347										
	33-347										
	33-347		49-210 Walbro			49-045					
	33-347										
	33-347										
	33-347										
	33-347										
	33-347		49-210 Walbro			49-045					
	33-347										
	33-347										
	33-347										
	33-347										
	33-347										
	33-347										
	33-347										
	33-347										
	33-347										
	33-365		49-033								
	33-365										
	33-365		49-033	49-989							43-400-0
	33-347										
	33-347										
	33-347										
	33-347										
	33-347										
49-162	33-347						49-169	49-168			
49-162	33-347						49-169	49-168			
	33-347										
	33-347						49-169	49-168			
	33-347										
	33-347										
	33-347										
	33-347						49-169	49-168			

X

Briggs & Stratton Quick X-Reference

Model		Foam Air Cleaner	Cartridge	Pre-Cleaner	Air Cleaner Gasket	Carb. Mtg. Gasket	Manifold Gasket	Head Gasket #1	Head Gasket #2	Gasket Set	Valve Cover Gasket
385700			30-087	30-974							
386400	Vanguard		30-087	30-974							49-172
386700	Vanguard		30-087	30-974							49-172
389400				30-929							
40R500			30-851								
40R600			30-851								
40A700			30-104	30-929	49-081		50-440	50-545	50-546	50-436	49-112
40F700			30-032 (non-washable) 30-136 (washable)	30-914							
40G700			30-032 (non-washable) 30-136 (washable)	30-914							
40H700	Extended life		30-032 (non-washable) 30-136 (washable)	30-914							
40N700			30-851								
40R700			30-851								
40S700			30-145								
40N800			30-851								
40R800			30-851								
40S800			30-145								
400400			30-101	30-929	49-081		50-440	50-545	50-546	50-436	49-112
400700			30-104	30-929	49-081		50-440	50-545	50-546	50-436	49-112
401500			30-032 (non-washable) 30-136 (washable)	30-914							
401400			30-101	30-929	49-081		50-440	50-545	50-546	50-436	49-112
401700			30-104	30-929	49-081		50-440	50-545	50-546	50-436	49-112
402400				30-929	49-081		50-440	50-545	50-546	50-436	49-112
402500			30-032 (non-washable) 30-136 (washable)	30-914							
402700			30-104	30-929	49-081		50-440	50-545	50-546	50-436	49-112
403500											
403600			30-032 (non-washable) 30-136 (washable)	30-917							
404400			30-101	30-929	49-081		50-440	50-545	50-546	50-436	49-112
404500			30-032 (non-washable) 30-136 (washable)	30-914							
404700			30-104	30-929	49-081		50-440	50-545	50-546	50-436	49-112
405500			30-032 (non-washable) 30-136 (washable)	30-914							
405700			30-032 (non-washable) 30-136 (washable)	30-914							
406500			30-032 (non-washable) 30-136 (washable)	30-914							
406600			30-032 (non-washable) 30-136 (washable)	30-914							
406700			30-032 (non-washable) 30-136 (washable)	30-914							
407500	Intek		30-032 (non-washable) 30-136 (washable)	30-914							
407600			30-032 (non-washable) 30-136 (washable)	30-914							
407700			30-032 (non-washable) 30-136 (washable)	30-914							
409700			30-182								
42A700			30-104	30-929	49-081		50-440	50-545	50-546	40-436	49-112
42B700			30-104	30-929	49-081		50-440	50-545	50-546	50-436	49-112
42C700			30-104	30-929	49-081		50-440	50-545	50-546	50-436	49-112
42D700			30-104	30-929	49-081		50-440	50-545	50-546	50-436	49-112
42E700			30-104	30-929	49-081		50-440	50-545	50-546	50-436	49-112
421400			30-101	30-929	49-081		50-440	50-545	50-546	50-436	49-112
421700			30-104	30-929	49-081		50-440	50-545	50-546	50-436	49-112
422400			30-101	30-929	49-081		50-440	50-545	50-546	50-436	49-112
422700			30-104	30-929	49-081		50-440	50-545	50-546	50-436	49-112
433400			30-075								
437400			30-075								
44R500			30-851								
44S500			30-145	30-975							
44N600			30-851								
44R600			30-851								
44S600											
44T600			30-182								
44H700			30-145	30-975							
44K700	Extended life		30-145	30-975							
44L700			30-145	30-975							
44M700			30-145	30-975							
44N700			30-145	30-975							
44P700	Extended life		30-145	30-975							
44Q700			30-145	30-975							
44R700			30-851								
44S700			30-145	30-975							
44T700			30-182								
44N800			30-851								
44R800			30-851								
44S800											
44T800			30-182								
44M900			30-182								

Base Gasket	Igition Armature	Diaphragm	Float Valve	Carb. Overhaul	Rod	Mag Oil Seal	PTO Oil Seal	Rings-Std	Starter Pulley	Recoil Spring	Recoil Starter
	33-347					49-169	49-168				
	33-347					49-169	49-168				
	33-347										
	33-352-0										
	33-352-0										
50-444	33-345			49-149		49-045	49-047				
	33-345					49-045					
	33-345					49-045					
	33-345										
	33-352-0										
	33-352-0										
	33-352-0										
	33-352-0										
	33-352-0										
	33-352-0										
50-444	33-345		49-033	49-149		49-045	49-047				
50-444	33-345		49-033	49-149		49-045	49-047				
	33-352-0										
50-444	33-345		49-033	49-149		49-045	49-047				
50-444	33-345		49-033	49-149		49-045	49-047				
50-444	33-345		49-033	49-149		49-045	49-047				
	33-345					49-045					
50-444	33-345		49-033	49-149		49-045	49-047				
	33-352-0										
	33-352-0										
50-444	33-345		49-033	49-149		49-045	49-047				
	33-352-0					49-045					
50-444	33-345		49-033	49-149		49-045	49-047				
	33-352-0										
	33-352-0					49-045					
	33-352-0										
	33-352-0										
	33-352-0					49-045					
	33-352-0					49-045					
	33-352-0					49-045					
	33-352-0					49-045					
	33-352-0										
50-444	33-345			49-149		49-045	49-047				
50-444	33-345			49-149		49-045	49-047				
50-444	33-345					49-045	49-047				
50-444	33-345			49-149		49-045	49-047				
50-444	33-345			49-149		49-045	49-047				
50-444	33-345		49-033	49-149		49-045	49-047				
50-444	33-345			49-149		49-045	49-047				
50-444	33-345		49-033	49-149		49-045	49-047			43-400-0	
50-444	33-345		49-033	49-149		49-045	49-047				
	33-352-0										
	33-352-0										
	33-352-0										
	33-352-0										
	33-352-0										
	33-352-0										
	33-352-0										
	33-352-0					49-045					
	33-352-0										
	33-352-0										
	33-352-0										
	33-352-0					49-045					
	33-352-0										
	33-352-0										
	33-352-0										
	33-352-0										
	33-352-0										
	33-352-0										
	33-352-0										
	33-352-0										
	33-352-0										
	33-352-0										

X

Briggs & Stratton Quick X-Reference

Model		Foam Air Cleaner	Cartridge	Pre-Cleaner	Air Cleaner Gasket	Carb. Mtg. Gasket	Manifold Gasket	Head Gasket #1	Head Gasket #2	Gasket Set	Valve Cover Gasket
44P900			30-182								
44Q900			30-182								
44S900			30-145	30-975							
44T900			30-182								
441500			30-032 (non-washable) 30-136 (washable)	30-914							
441600			30-032 (non-washable) 30-136 (washable)	30-914							
441700	Intek		30-032 (non-washable) 30-136 (washable)	30-914							
442500			30-032 (non-washable) 30-136 (washable)	30-914							
445500			30-032 (non-washable) 30-136 (wa shable)	30-914							
445600			30-032 (non-washable) 30-136 (washable)	30-914							
445700	Intek		30-032 (non-washable) 30-136 (washable, 05082200 or less) 30-139 (0508210 or greater)	30-914							
445800			30-032 (non-washable) 30-136 (washable, 05082200 or less) 30-139 (0508210 or greater)	30-914							
445900			30-032 (non-washable) 30-136 (washable, 05082200 or less) 30-139 (0508210 or greater)	30-914							
446600			30-032 (non-washable) 30-136 (washable, 05082200 or less) 30-139 (0508210 or greater)	30-914							
446700			30-032 (non-washable) 30-136 (washable)	30-914							
446800			30-032 (non-washable) 30-136 (washable, 05082200 or less) 30-139 (0508210 or greater)	30-914							
446900			30-032 (non-washable) 30-136 (washable)	30-914							
460700	Extended life		30-104	30-929	49-081		50-440	50-545	50-546	50-436	49-112
461700			30-104	30-929	49-081		50-440	50-545	50-546	50-436	49-112
462700			30-104	30-929	49-081		50-440	50-545	50-546	50-436	49-112
463700			30-104	30-929	49-081		50-400	50-545	50-546	50-436	49-112
473100			30-075								
474100			30-075								
49G500											
49L900			30-182								
49M700			30-145	30-975							
49M800			30-145	30-975							
49M900			30-182								
49S700			30-145	30-975							
49S800			30-145	30-975							
49T700			30-182								
49T800			30-182								
49V600											
540400			30-087	30-974							
541400			30-087	30-974							
542400			30-087	30-974							
543400	Vanguard		30-087	30-974							
543700			30-087	30-974							
58A400			30-075								
582400			30-075								
584400			30-075								
588400			30-075								
589400											
611400			30-087	30-974							
613400	Vanguard		30-087	30-974							
613700			30-087	30-974							

X

Base Gasket	Igition Armature	Diaphragm	Float Valve	Carb. Overhaul	Rod	Mag Oil Seal	PTO Oil Seal	Rings-Std	Starter Pulley	Recoil Spring	Recoil Starter
	33-352-0										
	33-352-0										
	33-352-0										
	33-352-0										
	33-352-0										
	33-352-0										
	33-352-0						49-045				
	33-352-0										
	33-352-0										
	33-352-0										
	33-352-0						49-045				
	33-352-0										
	33-352-0										
	33-352-0										
	33-352-0										
	33-352-0										
50-444	33-345			49-149		49-045	49-047				
50-444	33-345			49-149		49-045	49-047				
50-444	33-345			49-149		49-045	49-047				
50-444	33-345			49-149		49-045	49-047				
	33-352-0										
	33-352-0										
	33-352-0										
	33-352-0										
	33-352-0										
	33-352-0										
	33-352-0										
	33-352-0										
	33-352-0										
	33-352-0										
	33-352-0 04090100 & less										

X

2019 OEM X-Reference

OEM No.	OREGON	Page
ACE HARDWARE		
754-0145	75-145	LG 300
754-0151	75-004	LG 301
754-0178	75-179	LG 310
754-0201	75-441	LG 334
754-0230	75-008	LG 301
754-0234	75-441	LG 334
754-0240	75-009	LG 301
754-0241	75-012	LG 301
754-0266	75-016	LG 301
754-0293	75-018	LG 301
754-0349	75-021	LG 274
754-0350	75-035	LG 302
754-0935	75-092	LG 304
954-0145	75-145	LG 300
954-0145A	75-145	LG 300
954-0151	75-004	LG 301
954-015A	75-145	LG 300
954-0178	75-179	LG 310
954-0201	75-441	LG 334
954-0230	75-008	LG 301
954-0234	75-441	LG 334
954-0240	75-009	LG 301
954-0241	75-012	LG 301
954-0241A	75-012	LG 301
954-0266	75-016	LG 301
954-0266A	75-016	LG 301
954-0293	75-018	LG 301
954-0350	75-035	LG 302
954-0935	75-092	LG 304
GW-7540350	75-035	LG 302
AFFILIATED EXPORT		
754-0935	75-092	LG 304
954-0935	75-092	LG 304
AFFILIATED LANDMASTER		
754-0935	75-092	LG 304
954-0935	75-092	LG 304
AGWAY		
37X11	75-111	LG 306
37X22	75-022	LG 307
37X40	75-040	LG 306
754-0145	75-145	LG 300
754-0151	75-004	LG 301
754-0178	75-179	LG 310
754-0201	75-441	LG 334
754-0230	75-008	LG 301
754-0234	75-441	LG 334
754-0240	75-009	LG 301
754-0241	75-012	LG 301
754-0266	75-016	LG 301
754-0935	75-092	LG 304
954-0145	75-145	LG 300
954-0145A	75-145	LG 300
954-0151	75-004	LG 301
954-015A	75-145	LG 300
954-0178	75-179	LG 310
954-0201	75-441	LG 334
954-0230	75-008	LG 301
954-0234	75-441	LG 334
954-0240	75-009	LG 301
954-0241	75-012	LG 301
954-0241A	75-012	LG 301
954-0266	75-016	LG 301
954-0266A	75-016	LG 301
954-0935	75-092	LG 304
AIMCEE WHOLESALE		
754-0935	75-092	LG 304
954-0935	75-092	LG 304
AIRCAP		
754-0145	75-145	LG 300
754-0151	75-004	LG 301
754-0240	75-009	LG 301
754-0241	75-012	LG 301
954-0145	75-145	LG 300
954-0145A	75-145	LG 300
954-0151	75-004	LG 301
954-015A	75-145	LG 300
954-0240	75-009	LG 301
954-0241	75-012	LG 301
954-0241A	75-012	LG 301
ALDENS		
754-0151	75-004	LG 301
754-0158	75-012	LG 301
754-0935	75-092	LG 304
954-0151	75-004	LG 301
954-0935	75-092	LG 304
ALLIED HARDWARE		
754-0145	75-145	LG 300
754-0151	75-004	LG 301
754-0178	75-179	LG 310
754-0234	75-441	LG 334
754-0935	75-092	LG 304
954-0145	75-145	LG 300
954-0145A	75-145	LG 300
954-0151	75-004	LG 301
954-015A	75-145	LG 300
954-0178	75-179	LG 310
954-0935	75-092	LG 304
ALLIED STORE CORP.		
754-0145	75-145	LG 300
954-0145	75-145	LG 300
954-0145A	75-145	LG 300
954-015A	75-145	LG 300
ALLIS CHALMERS		
101096	34-044	LG 821
1652231	45-259	LG 224
1675342	75-498	LG 335
1737228A	599-132*	LG 522
1737228A	99-132	LG 539
1737228BZYP	599-132*	LG 522
1737228BZYP	99-132	LG 539
1737816BM	391-605*	LG 544
1737816BM	91-605	LG 544
1737816BMYP	391-605*	LG 544
1737816BMYP	91-605	LG 544
2026082	34-009	LG 821
2026320	34-044	LG 821
2026357	78-114	LG 829
2028960	34-009	LG 821
2029824	34-002	LG 821
2087950	34-017	LG 821
536986	45-295	LG 232
ALLISON-ERWIN		
754-0151	75-004	LG 301
754-0178	75-179	LG 310
954-0151	75-004	LG 301
954-0178	75-179	LG 310
ALPINA		
3630210	49-021	LG 629
66844	49-816	LG 612
8723450	49-812	LG 612
AMERICAN HARDWARE		
37X38	75-038	LG 307
754-0145	75-145	LG 300
754-0178	75-179	LG 310
754-0194	75-090	LG 301
754-0201	75-441	LG 334
754-0230	75-008	LG 301
754-0230954-0226	75-008	LG 301
754-0234	75-441	LG 334
754-0240	75-009	LG 301
754-0240954-0230	75-009	LG 301
754-0241	75-012	LG 301
754-0241954-0240	75-012	LG 301
754-0280	75-002	LG 301
754-0280A	75-002	LG 301
754-0281	75-281	LG 301
754-0293	75-018	LG 301
754-0935	75-092	LG 304
954-0145	75-145	LG 300
954-0145A	75-145	LG 300
954-015A	75-145	LG 300
954-0178	75-179	LG 310
954-0194	75-090	LG 301
954-0201	75-441	LG 334
954-0234	75-441	LG 334
954-0241	75-012	LG 301
954-0241A	75-012	LG 301
954-0280	75-002	LG 301
954-0280A	75-002	LG 301
954-0281	75-281	LG 301
954-0293	75-018	LG 301
954-0935	75-092	LG 304
AMF		
13469	34-013	LG 824
13469	34-017	LG 821
20304	02-178	LG 676
2125	02-531	
21275	45-104	LG 939
25812	75-120	LG 300
27332	34-005	LG 821
27788	34-037	LG 821
300142	75-038	LG 307
300295	33-386	LG 942
300575	15-649	LG 309
300680	75-136	LG 309
300687	33-396	LG 944
300841	34-820	LG 833
300842	75-137	LG 309
300920	34-023	LG 822
301935	75-214	LG 309
302031	33-032	LG 742
3021	02-535	
302289	15-650	LG 259
302418	73-022	LG 847
302611	72-100	
303241	15-651	LG 259
303534	82-493	LG 869
305148	15-652	LG 259
305530	06-004	LG 805
307534	82-493	LG 869
308701	15-653	LG 310
310240	82-514	LG 869
310326	34-820	LG 833
310675	82-020	LG 903
313823	82-493	LG 869
313907	82-514	LG 869
314108	75-138	LG 310
315542	31-907	LG 929
33125	15-654	LG 309
33200	80-014	LG 727
332489	04-723	
33486	02-535	
35374	34-034	LG 821
35384	45-295	LG 232
36576	72-301	LG 1037
39456	75-145	LG 300
39493	82-493	LG 869
39498	34-011	LG 821
39605	72-301	LG 1037
39628	80-036	LG 727
39633	34-810	LG 725
39707	70-307	LG 960
39828	70-334	LG 959
39831	72-106	LG 1029
39831	72-304	LG 1038
39979	45-079	LG 249
40195	45-098	LG 243
40223	34-009	LG 821
40501	34-022	LG 822
41585	72-301	LG 1037
42690	07-392	LG 767
42879	07-400	LG 767
43066	75-168	LG 310
44257	34-019	LG 821
44280	34-038	LG 821
44745	33-386	LG 942
45074	34-030	LG 821
45074	34-033	LG 821
45186	15-657	LG 259
45651	34-033	LG 821
45927	02-190	LG 676
46476	34-016	LG 824
46993	34-002	LG 821
47781	34-031	LG 821
47782	34-001	LG 821
48044	75-179	LG 310
49580	75-038	LG 307
49878	15-659	LG 309
50334	82-514	LG 869
50335	82-514	LG 869
50632	82-493	LG 869
51134	34-019	LG 821
51438	82-514	LG 869
51448	34-012	LG 821
51450	82-493	LG 869
52204	72-307	LG 1038
52323	33-330	LG 729
52584	72-304	LG 1038
52694	34-013	LG 824
53243	34-031	LG 821
53244	34-036	LG 821
53415	514366	LG 700
53415	60-400	LG 700
53716	33-330	LG 729
54446	72-108	LG 1031
54765	35-021	LG 810
54766	35-021	LG 810
54837	73-025	LG 855
56283	82-514	LG 869
56424	82-493	LG 869
57214	75-142	LG 310
57353	514366	LG 700
57353	60-400	LG 700
57556	15-660	LG 309
57736	34-019	LG 821
58170	75-143	LG 310
64761	34-016	LG 824
782966	33-330	LG 729
ANN & HOPE		
754-0201	75-441	LG 334
754-0234	75-441	LG 334
954-0201	75-441	LG 334
954-0234	75-441	LG 334
ARIENS		
00173800	92-040	LG 369
00173800	96-040*	LG 369
00191700	33-130	LG 733
00272800	96-040*	LG 369
00272900	94-615*	LG 370
0027300	396-809*	LG 370
0027300	596-816*	LG 451
00273000	396-716*	LG 451
00273000	596-310*	LG 447
00273000	92-153	LG 370

X

* OREGON® Gator™ replacement blade

ARIENS

OEM No.	OREGON	Page
00273000	96-310*	LG 444
00273000	99-127	LG 375
00273100	396-806*	LG 453
00273100	596-817*	LG 371
00300300	76-067-0	LG 726
00450200	396-809*	LG 370
00450200	596-816*	LG 451
00450200	92-153	LG 370
00450300	396-806*	LG 453
00450300	596-817*	LG 371
00450300	92-151	LG 453
00522100	33-002	LG 946
0055430	33-117	LG 733
00574100	33-117	LG 733
00574200	33-121	LG 734
00873700	07-122	LG 775
01016500	73-100	LG 850
01019500	80-740	LG 852
01019800	04-723	
01027400	45-035	LG 226
01027500	45-000	LG 237
01027800	33-375	LG 942
01027900	76-067-0	LG 726
01028000	76-070-0	LG 726
01028100	04-721	
01028200	33-350	LG 949
01028300	30-920	LG 186
01028400	30-044	LG 179
01028500	30-825	LG 179
01028600	73-028	LG 850
01028700	73-100	LG 850
01028800	45-104	LG 939
01028900	33-330	LG 729
01029000	33-330	LG 729
01029200	33-113	LG 740
01029300	33-027	LG 947
01029400	45-114	LG 938
01029500	45-117	LG 938
01029600	33-393	LG 943
01029700	83-300	LG 819
01029900	83-300	LG 819
01030100	76-070-0	LG 726
01030300	33-393	LG 943
01030400	45-114	LG 938
01030500	33-334	LG 730
01030600	33-336	LG 730
01030700	33-111	LG 735
01030800	33-410	LG 947
01030900	33-112	LG 735
01031000	34-019	LG 821
01031200	45-206	LG 231
01031300	45-205	LG 228
01031400	45-035	LG 226
01031500	45-002	LG 237
01031600	45-257	LG 245
01032000	45-295	LG 232
01032100	45-000	LG 237
01032200	45-208	LG 245
01032400	45-295	LG 232
01032600	45-259	LG 224
01032700	45-000	LG 237
01032800	45-208	LG 245
01033000	45-260	LG 224
01033100	45-000	LG 237
01033200	45-010	LG 238
01033400	45-208	LG 245
01033500	45-260	LG 224
01033600	45-257	LG 245
01033900	45-295	LG 232
01034200	45-295	LG 232
01034300	45-003	LG 244
01034400	45-013	LG 853
01034500	45-007	LG 853
01034600	45-006	LG 249
01034700	45-007	LG 853
01034800	45-098	LG 243
01034900	45-009	LG 853
01035000	45-008	LG 853
01035100	45-009	LG 853
01035200	45-007	LG 853
01035300	45-009	LG 853
01035400	45-008	LG 853
01035500	33-117	LG 733
01035600	33-117	LG 733
01036500	80-742	LG 852
01036600	04-723	
01036700	02-535	
01036800	02-531	
01036900	04-721	
01037000	72-737	LG 1045
01037100	72-737	LG 1045
01037200	75-098	LG 251
01037300	75-080	LG 862
01037400	75-096	LG 265
01037600	75-096	LG 265
01037700	75-096	LG 265
01037800	75-067	LG 862
01037900	75-096	LG 265
01038000	75-117	LG 265
01038100	75-096	LG 265
01038300	75-086	LG 265
01038400	75-084	LG 265
01038500	75-087	LG 265
01038600	75-086	LG 265
01038700	75-087	LG 265
01038800	34-012	LG 821
01038900	34-007	LG 826
01039000	34-024	LG 822
01039100	34-030	LG 821
01039200	34-037	LG 821
01039300	34-012	LG 821
01039400	34-029	LG 821
01039500	34-019	LG 821
01039600	34-002	LG 821
01039700	34-001	LG 821
01039800	34-029	LG 821
01040000	07-392	LG 767
01040100	07-392	LG 767
01040200	33-028	LG 947
01120300	91-005	LG 458
01120300	96-041*	LG 372
01128500	91-005	LG 458
01128500	96-041*	LG 372
01137000	91-005	LG 458
01137000	96-041*	LG 372
01137051	91-005	LG 458
01137051	96-041*	LG 372
01137059	91-005	LG 458
01137059	96-041*	LG 372
01182400	91-005	LG 458
01182400	96-041*	LG 372
01209600	75-223	LG 269
01545600	33-002	LG 946
01584500	92-602*	LG 455
01584500	96-041*	LG 372
01588100	70-710	LG 964
01588100	72-725	LG 1044
02451800	30-920	LG 186
02483859	73-028	LG 850
02483859	73-100	LG 850
02526400	82-010	LG 869
02526400	82-011	LG 869
02961600	92-217	LG 369
02961600	96-808*	LG 450
02961700	596-818*	LG 453
02961700	92-157	LG 453
02982000	396-809*	LG 370
02982000	596-816*	LG 451
02982000	92-153	LG 370
03027800	91-003	LG 370
03027851	91-003	LG 370
03027859	91-003	LG 370
03037500	82-010	LG 869
03037500	82-011	LG 869
03123700	91-003	LG 370
03123751	91-003	LG 370
03123759	91-003	LG 370
03253800	396-806*	LG 453
03253800	596-817*	LG 371
03253800	92-151	LG 453
03253900	396-807*	LG 454
03253900	596-815*	LG 578
03253900	92-159	LG 578
0327859	91-003	LG 370
0341900	82-010	LG 869
0341900	82-011	LG 869
03450500	33-118-1	LG 733
03485500	82-010	LG 869
03485500	82-011	LG 869
03498400	92-040	LG 369
03498400	96-040*	LG 369
03498451	92-040	LG 369
03551000	33-336	LG 730
03607059	191-015	LG 372
03607059	96-677*	LG 372
03615300	82-011	LG 869
03615400	82-010	LG 869
03624700	191-015	LG 372
03624700	96-677*	LG 372
03624751	191-015	LG 372
03624751	96-677*	LG 372
03624759	191-015	LG 372
03624759	96-677*	LG 372
03625000	82-010	LG 869
03625000	82-011	LG 869
03643100	33-112	LG 735
03789800	40-130	LG 586
04159600	92-415	LG 374
04159600	96-415*	LG 456
04916400	396-806*	LG 453
04916400	596-817*	LG 371
04919100	396-716*	LG 451
04919100	596-310*	LG 447
04919100	91-183	LG 370
04919100	92-153	LG 370
04919100	96-310*	LG 444
04920600	396-716*	LG 451
04920600	596-310*	LG 447
04920600	92-153	LG 370
04920600	96-310*	LG 444
04920600	99-127	LG 375
05403900	45-242	LG 243
05404400	45-206	LG 231
05404500	45-205	LG 228
05405500	45-205	LG 228
05406300	45-035	LG 226
05406900	45-002	LG 237
05407000	45-295	LG 232
05408000	45-267	LG 235
05408900	45-000	LG 237
05408900	45-010	LG 238
05408900	45-260	LG 224
05409300	45-268	LG 227
05412000	82-010	LG 869
05412000	82-011	LG 869
05412300	45-259	LG 224
05415100	45-000	LG 237
05415100	45-010	LG 238
05416000	45-269	LG 227
05416200	45-000	LG 237
05416200	45-010	LG 238
05417700	45-270	LG 227
05418200	45-271	LG 227
05418800	45-257	LG 245
05435200	45-272	LG 227
05500111	45-275	LG 225
05502800	45-003	LG 244
05503000	45-013	LG 853
05503500	45-006	LG 249
055039	45-007	LG 853
05503900	45-007	LG 853
05505800	45-098	LG 243
05511000	45-008	LG 853
05511200	45-009	LG 853
06201800	81-012	LG 802
06444200	82-010	LG 869
06444200	82-011	LG 869
07100124	72-725	LG 1044
07200004	75-906	LG 251
07200007	75-907	LG 264
07200020	75-908	LG 265
07200021	75-909	LG 251
07200026	15-152	LG 264
07200027	15-153	LG 286
07200028	15-154	LG 286
07200030	15-155	LG 264
07200032	15-156	LG 286
07200039	15-157	LG 286
07200116	15-158	LG 286
07200433	15-159	LG 286
07200623	75-908	LG 265
07202300	15-221	LG 265
07204700	75-098	LG 251
07205200	15-190	LG 265
07205600	75-080	LG 862
07206000	75-010	LG 311
07206100	75-096	LG 265
07206700	75-096	LG 265
07207200	75-096	LG 265
07207400	75-067	LG 862
07208100	15-192	LG 265
07208300	75-096	LG 265
07208600	75-117	LG 265
07208800	75-322	LG 334
07209800	15-193	LG 266
07210800	75-096	LG 265
07211300	75-086	LG 265
07211400	75-084	LG 265
07212300	75-889	LG 252
07213000	15-194	LG 265
07213100	15-195	LG 265
07213800	75-087	LG 265
07216900	75-086	LG 265
07217100	75-087	LG 265
07219100	75-909	LG 251
07223100	15-200	LG 285
07223800	15-201	LG 285
07224200	15-202	LG 285
07225000	15-203	LG 286
07225800	15-222	LG 285
07226000	15-205	LG 266
07232100	15-193	LG 266
07234500	15-208	LG 266
07234600	15-164	LG 286
07234900	15-165	LG 286
07235100	15-167	LG 286
07236200	75-096	LG 265
07236200	75-983	LG 862
07236300	15-211	LG 266
07238200	15-213	LG 286
07239200	15-169	LG 266
07239300	15-170	LG 266
07239400	15-171	LG 286
07240700	15-173	LG 287
07241300	15-174	LG 287
07241500	15-215	LG 287
0724160	115-200	LG 287
07241600	115-200	LG 287
07241700	15-216	LG 266

* OREGON® Gator™ replacement blade

2019 OEM X-Reference

OEM No.	OREGON	Page
ARIENS		
07241800	15-217	LG 287
07242300	15-180	LG 287
07242800	15-181	LG 266
07300101	34-019	LG 821
07305400	78-033	LG 834
07312559	34-019	LG 821
07312700	34-012	LG 821
07314000	34-029	LG 821
08844200	34-019	LG 821
08861600	396-805*	LG 452
08861600	91-242	LG 371
08866800	396-805*	LG 452
08899100	396-807*	LG 454
08899100	596-815*	LG 578
08899100	92-159	LG 578
08899300	396-805*	LG 452
08899300	91-242	LG 371
09081200	396-807*	LG 454
09081200	596-815*	LG 578
09081200	92-159	LG 578
09225400	33-119-1	LG 734
09232700	33-120	LG 734
09232700	33-138	LG 738
09254700	392-416*	LG 374
09290500	392-416*	LG 374
09290500	92-416	LG 456
09290600	392-416*	LG 374
09407700	33-121	LG 734
10164	73-029	LG 847
1016400	73-029	LG 847
1016459	73-029	LG 847
10165	73-100	LG 850
10195	80-740	LG 852
10198	04-723	
10274	45-035	LG 226
1120300	91-005	LG 458
11228	45-000	LG 237
11285	91-005	LG 458
1128500	91-005	LG 458
11370	91-005	LG 458
1137000	91-005	LG 458
1137051	91-005	LG 458
1137059	91-005	LG 458
1182400	91-005	LG 458
1545600	33-002	LG 946
1584500	92-602*	LG 455
1588100	72-725	LG 1044
15883	33-375	LG 942
1588300	33-375	LG 942
1600500	96-040*	LG 369
17080	76-067-0	LG 726
170800	76-067-0	LG 726
191256	33-028	LG 947
191700	33-130	LG 733
192507	33-334	LG 730
20033200	35-006	LG 808
200675	45-000	LG 237
200675	45-208	LG 245
206377	45-000	LG 237
206377	45-208	LG 245
20637700	45-000	LG 237
20637700	45-208	LG 245
210798	34-037	LG 821
21085400	91-003	LG 370
21397200	83-404	LG 818
21535800	69-282	LG 817
21535800	83-501	LG 817
21535900	30-527	LG 202
21536900	30-845	LG 208
21538200	30-835	LG 200
21538200	69-322	LG 200
21541500	07-103	LG 775
21542700	30-130	LG 205
21546095	195-032	LG 425
21546095	596-900*	LG 380
21546095	96-900*	LG 526
21546235	195-072	LG 530
21546235	595-605*	LG 422
21546235	95-605*	LG 463
21546611	195-070	LG 469
21546611	596-370*	LG 427
21546611	96-370*	LG 533
21546848	595-605*	LG 422
21546848	95-082	LG 372
21546848	95-605*	LG 463
21547257	596-615*	LG 529
21547257	95-068	LG 376
21547257	96-615*	LG 461
21547939	195-062	LG 376
21547939	596-615*	LG 529
21547939	96-615*	LG 461
22013	76-070-0	LG 726
22153	04-721	
23478	33-350	LG 949
24518	30-920	LG 186
24519	30-044	LG 179
24519	30-825	LG 179
24599	73-028	LG 850
24599	73-100	LG 850
2483859	73-028	LG 850
2483859	73-100	LG 850
2526400	82-010	LG 869
2526400	82-011	LG 869
273000	92-153	LG 370
29171	45-104	LG 939
2961700	92-157	LG 453
3003	76-067-0	LG 726
300300	76-067-0	LG 726
30278	91-003	LG 370
3027800	91-003	LG 370
3027851	91-003	LG 370
3027859	91-003	LG 370
3037500	82-010	LG 869
3037500	82-011	LG 869
30387	33-330	LG 729
3042800	33-317-0	LG 729
30577	33-330	LG 729
30577	33-331	LG 730
3057700	33-330	LG 729
3057700	33-331	LG 730
3057700	33-337	LG 730
30908	33-113	LG 740
3090800	33-113	LG 740
30957	33-027	LG 947
3095700	33-027	LG 947
31129	45-114	LG 938
31130	45-117	LG 938
31152	33-393	LG 943
3123700	91-003	LG 370
3123751	91-003	LG 370
3123759	91-003	LG 370
31486	83-300	LG 819
31928	83-300	LG 819
319460	82-010	LG 869
32483	76-070-0	LG 726
3253800	92-151	LG 453
3253900	92-159	LG 578
327859	91-003	LG 370
341900	82-010	LG 869
341900	82-011	LG 869
3450500	33-118-1	LG 733
3485500	82-010	LG 869
3485500	82-011	LG 869
34909	33-393	LG 943
3498400	92-040	LG 369
3498451	92-040	LG 369
34986	45-114	LG 938
35510	33-334	LG 730
35510	33-336	LG 730
3551000	33-334	LG 730
3551000	33-335	LG 730
3551000	33-336	LG 730
357100	33-015	LG 948
36018	33-111	LG 735
3601800	33-111	LG 735
36024	33-410	LG 947
3602400	33-410	LG 947
3615300	82-011	LG 869
3615400	82-010	LG 869
3625000	82-010	LG 869
3625000	82-011	LG 869
36431	33-112	LG 735
3643100	33-112	LG 735
41545	15-184	LG 285
41599	15-185	LG 285
432100	33-317-0	LG 729
450300	92-151	LG 453
49029	15-220	LG 285
4919100	92-153	LG 370
4920600	92-153	LG 370
49270	15-187	LG 285
510015	80-740	LG 852
51001500	80-740	LG 852
510016	80-741	LG 852
510016	80-742	LG 852
51001600	80-741	LG 852
51001600	80-742	LG 852
51134	34-019	LG 821
51213	15-188	LG 285
522100	33-002	LG 946
532005	80-742	LG 852
53200500	80-742	LG 852
54044	45-206	LG 231
5404400	45-206	LG 231
54045	45-205	LG 228
5404500	45-205	LG 228
5405500	45-205	LG 228
54063	45-035	LG 226
5406300	45-035	LG 226
54069	45-002	LG 237
5406900	45-002	LG 237
54071	45-257	LG 245
54073	45-295	LG 232
54089	45-000	LG 237
54089	45-208	LG 245
5408900	45-000	LG 237
5408900	45-010	LG 238
54120	45-295	LG 232
5412000	82-010	LG 869
5412000	82-011	LG 869
54123	45-259	LG 224
54141	45-000	LG 237
54151	45-208	LG 245
5415100	45-000	LG 237
5415100	45-010	LG 238
54161	45-260	LG 224
54162	45-000	LG 237
54162	45-010	LG 238
54162	45-208	LG 245
54162	45-260	LG 224
5416200	45-000	LG 237
5416200	45-010	LG 238
54188	45-257	LG 245
5418800	45-257	LG 245
54248	45-295	LG 232
54355	45-295	LG 232
55028	45-003	LG 244
5502800	45-003	LG 244
55030	45-013	LG 853
5503000	45-013	LG 853
55034	45-007	LG 853
55035	45-006	LG 249
5503500	45-006	LG 249
55039	45-007	LG 853
5503900	45-007	LG 853
55058	45-098	LG 243
5505800	45-098	LG 243
55102	45-009	LG 853
55110	45-008	LG 853
5511000	45-008	LG 853
55112	45-009	LG 853
5511200	45-009	LG 853
55113	45-007	LG 853
55114	45-009	LG 853
55152	45-008	LG 853
55430	33-117	LG 733
554300	33-117	LG 733
574100	33-117	LG 733
574200	33-121	LG 734
59071	80-742	LG 852
5907100	80-741	LG 852
59201000	82-041	LG 890
59202600	82-042	LG 891
62828	15-715	LG 315
62870	04-723	
6444200	82-010	LG 869
6444200	82-011	LG 869
66003	02-535	
66009	02-531	
690003	45-002	LG 237
69000300	45-002	LG 237
70511	04-721	
70760900	396-807*	LG 454
70760900	596-815*	LG 578
70760900	92-159	LG 578
70763400	596-818*	LG 453
70763400	92-157	LG 453
7100124	72-725	LG 1044
71253	72-737	LG 1045
7125300	72-737	LG 1045
71301	72-737	LG 1045
7130100	72-737	LG 1045
7200004	75-906	LG 251
7200007	75-907	LG 264
7200020	75-908	LG 265
7200021	75-909	LG 251
7200435	15-160	LG 253
7200623	75-908	LG 265
72023	15-221	LG 265
72047	75-098	LG 251
7204700	75-098	LG 251
72052	15-190	LG 265
72056	75-080	LG 862
7205600	75-080	LG 862
72061	75-096	LG 265
7206100	75-096	LG 265
7206600	75-634	LG 314
72067	75-096	LG 265
7206700	75-096	LG 265
72072	75-096	LG 265
7207200	75-096	LG 265
72074	75-067	LG 862
7207400	75-067	LG 862
72081	15-192	LG 265
72083	75-096	LG 265
7208300	75-096	LG 265
72086	75-117	LG 265
7208600	75-117	LG 265
72098	15-193	LG 266
7209900	75-631	LG 314
72108	75-096	LG 265
7210800	75-096	LG 265
72113	75-086	LG 265
7211300	75-086	LG 265
72114	75-084	LG 265
7211400	75-084	LG 265
72130	15-194	LG 265
72131	15-195	LG 265
72138	75-087	LG 265

* OREGON® Gator™ replacement blade

OEM No.	OREGON	Page
ARIENS		
7213800	75-087	LG 265
72169	75-086	LG 265
7216900	75-086	LG 265
72171	75-087	LG 265
7217100	75-087	LG 265
7219100	75-909	LG 251
72231	15-200	LG 285
72238	15-201	LG 285
72242	15-202	LG 285
72258	15-222	LG 285
72260	15-205	LG 266
72345	15-208	LG 266
7235500	15-210	LG 266
7236200	75-983	LG 862
72363	15-211	LG 266
72382	15-213	LG 286
7241500	15-215	LG 287
724160	115-200	LG 287
7241600	115-200	LG 287
7241700	15-216	LG 266
7241800	15-217	LG 287
7242000	15-179	LG 287
73054	34-012	LG 821
73061	34-007	LG 826
73061	34-024	LG 822
7306100	78-021	LG 832
73109	34-030	LG 821
73114	34-037	LG 821
73123	34-012	LG 821
73123	34-029	LG 821
73125	34-019	LG 821
73127	34-002	LG 821
73128	34-001	LG 821
73140	34-029	LG 821
7500108	33-089	LG 946
75093	07-392	LG 767
75114	07-392	LG 767
88281	33-028	LG 947
8828100	33-028	LG 947
8861600	91-242	LG 371
8899100	92-159	LG 578
8899300	91-242	LG 371
9081200	92-159	LG 578
9225400	33-119-1	LG 734
9232700	33-120	LG 734
9240	15-218	LG 285
9407700	33-121	LG 734
TCU18744	72-032	LG 1038
ARTSWAY & ROTECH		
66102	91-591	LG 481
66967	91-590	LG 492
ATLAS		
9924	75-120	LG 300
AUTOMOTIVE ASSOCIATES		
754-0145	75-145	LG 300
754-0151	75-004	LG 301
754-0178	75-179	LG 310
754-0201	75-441	LG 334
754-0234	75-441	LG 334
754-0935	75-092	LG 304
954-0145	75-145	LG 300
954-0145A	75-145	LG 300
954-0151	75-004	LG 301
954-015A	75-145	LG 300
954-0178	75-179	LG 310
954-0201	75-441	LG 334
954-0234	75-441	LG 334
954-0935	75-092	LG 304
AYP		
009040	45-057	LG 249

OEM No.	OREGON	Page
100140M	95-014	LG 374
100140M	95-607*	LG 397
100669K	95-015	LG 400
100699X	82-678	LG 904
101273	35-021	LG 810
101273M	35-021	LG 810
101273X	35-021	LG 810
101344L	78-121	LG 827
101477X	82-677	LG 903
101479X	82-677	LG 903
101674X	05-072	LG 1023
102050X	82-677	LG 903
102403X	78-110	LG 833
102655X	15-688	LG 315
102792X	45-128	LG 228
102972X	33-397	LG 942
103R	33-331	LG 730
103R	33-334	LG 730
103R	33-335	LG 730
103R	33-336	LG 730
104360X	34-046	LG 824
104445X	33-027	LG 947
104679X	34-008	LG 821
104679X	34-015	LG 821
104926X	82-678	LG 904
105307X	34-036	LG 821
105313X	78-043	LG 824
105477X	82-679	LG 870
105483X	82-680	LG 870
105722X	82-678	LG 904
106037X	82-680	LG 870
106038X	82-679	LG 870
106038X	95-058	LG 458
106040X	82-495	LG 870
106041X	396-716*	LG 451
106041X	596-310*	LG 447
106041X	82-495	LG 870
106041X	96-310*	LG 444
106085X	75-107	LG 254
106316	33-114	LG 734
106316X	33-114	LG 734
106634X	95-015	LG 400
106635X	95-014	LG 374
106635X	95-607*	LG 397
106734	05-020	LG 913
106863X	15-691	LG 260
107610	72-094	LG 1042
108218	33-110	LG 735
108218X	33-110	LG 735
10830	75-974	LG 294
108597X	15-691	LG 260
108824X	33-035	LG 742
109081X	33-331	LG 730
109081X	33-334	LG 730
109081X	33-335	LG 730
109081X	33-336	LG 730
109550X	33-114	LG 734
109553X	33-028	LG 947
109685X	82-678	LG 904
109748	33-317-0	LG 729
109748X	33-317-0	LG 729
109869X	33-027	LG 947
109946	33-334	LG 730
109946X	33-331	LG 730
109946X	33-334	LG 730
109946X	33-335	LG 730
109946X	33-336	LG 730
110411	15-472	LG 259
1104585XMS	45-257	LG 245
110484X	34-034	LG 821
110485	45-257	LG 245
110485X	45-257	LG 245
110485XCS	45-257	LG 245
110832	15-473	LG 288
110832X	33-331	LG 730

OEM No.	OREGON	Page
110832X	33-337	LG 730
110883	75-108	LG 289
110883X	75-108	LG 289
110884X	75-194	LG 289
111924X	15-693	LG 311
112053	195-072	LG 530
112053	595-605*	LG 422
112053	95-605*	LG 463
112529	15-474	LG 288
12000029	02-020	
120262X	95-034	LG 377
120382X	45-128	LG 228
120626X	95-034	LG 377
120754X	45-128	LG 228
121263X	95-031	LG 377
121305	33-019	LG 948
121305X	33-019	LG 948
121617X	82-679	LG 870
121622X	82-680	LG 870
121657X	82-679	LG 870
121657X	95-058	LG 458
121658X	82-680	LG 870
121676X	82-678	LG 904
121687	82-678	LG 904
121687X	82-678	LG 904
121687XCS	82-678	LG 904
121687XMS	82-678	LG 904
121704X	82-495	LG 870
121705X	396-716*	LG 451
121705X	596-310*	LG 447
121705X	82-495	LG 870
121705X	96-310*	LG 444
121922X	45-073	LG 227
122265X	95-014	LG 374
122265X	95-607*	LG 397
123713X	05-020	LG 913
123848X	45-128	LG 228
124293X	15-695	LG 260
125104X	33-386	LG 942
125907X	175-171	LG 261
125907X	75-171	LG 289
126112X	33-110	LG 735
126338X	95-034	LG 377
126520X	75-935	LG 255
126847	45-128	LG 228
126847X	45-128	LG 228
127783	34-049	LG 824
12784	195-033	LG 400
12784	595-601*	LG 400
12784	95-601*	LG 423
127841	595-613*	LG 463
127841	95-036	LG 463
127841	95-613*	LG 463
127842	195-033	LG 400
127842	595-601*	LG 400
127842	95-601*	LG 423
127843	195-032	LG 425
127843	596-900*	LG 380
127843	96-900*	LG 526
128774	82-024	LG 871
128774	82-220	LG 871
128774CS	82-220	LG 871
128774MS	82-220	LG 871
129206	44-371	LG 834
129861	44-370	LG 834
129895	45-259	LG 224
129963	09-260	LG 870
130652	95-006	LG 397
130794	82-014	LG 871
130794	82-225	LG 871
130794CS	82-014	LG 871
130794CS	82-225	LG 871
130794MS	82-014	LG 871
130794MS	82-225	LG 871
130794WA	82-014	LG 871

OEM No.	OREGON	Page
130794WA	82-225	LG 871
130801	75-167	LG 289
130861	46-325	LG 701
130969	175-106	LG 261
130969	75-106	LG 261
130969MS	75-106	LG 261
131006	75-163	LG 261
131264	75-097	LG 289
131264MS	75-097	LG 289
131290	75-936	LG 290
131322	595-601*	LG 400
131322	95-047	LG 378
131322	95-601*	LG 423
131491	76-034	
131494	34-046	LG 824
132801	75-889	LG 252
133035	75-890	LG 289
133107	60-105	LG 702
133346	95-051	LG 465
133348	195-021	LG 468
133348	595-602*	LG 403
133348	95-602*	LG 403
133957	72-094	LG 1042
134148	195-003	LG 400
134148	595-601*	LG 400
134148	95-601*	LG 423
134148M	195-003	LG 400
134148M	595-601*	LG 400
134148M	95-601*	LG 423
134148X	195-003	LG 400
134148X	595-601*	LG 400
134148X	95-601*	LG 423
134149	195-005	LG 373
134149	596-900*	LG 380
134149	96-900*	LG 526
134768	195-021	LG 468
134768	595-602*	LG 403
134768	95-602*	LG 403
134871	95-051	LG 465
136376	81-013	LG 802
136572	44-302	LG 841
136818	82-680	LG 870
136819	82-680	LG 870
136874	76-040	LG 941
137078	175-164	LG 262
137078	75-164	LG 262
137140	33-110	LG 735
137152	82-221	LG 872
137153	175-195	LG 289
137153	75-195	LG 254
137380	595-609*	LG 461
137380	95-018	LG 399
137380	95-609*	LG 376
137553	85-023	LG 907
137645	85-017	LG 907
137646	85-017	LG 907
138255	75-167	LG 289
138255CS	75-167	LG 289
138255MS	75-167	LG 289
138255WA	75-167	LG 289
138406	33-331	LG 730
138406	33-334	LG 730
138406X	33-334	LG 730
138406X	33-335	LG 730
138406X	33-336	LG 730
138496	595-613*	LG 463
138496	95-036	LG 463
138496	95-613*	LG 463
138497	195-003	LG 400
138497	595-601*	LG 400
138497	95-601*	LG 423
138498	195-032	LG 425
138498	596-900*	LG 380
138498	96-900*	LG 526
138791	195-032	LG 425

X

* OREGON® Gator™ replacement blade

2019 OEM X-Reference

OEM No.	OREGON	Page
AYP		
138791	596-900*	LG 380
138791	96-900*	LG 526
138970	195-033	LG 400
138970	595-601*	LG 400
138970	95-601*	LG 423
138971	195-032	LG 425
138971	596-900*	LG 380
138971	96-900*	LG 526
139245	34-049	LG 824
139573	175-169	LG 290
139573	75-169	LG 290
139744MS	195-003	LG 400
139744MS	595-601*	LG 400
139744MS	95-601*	LG 423
139774	195-003	LG 400
139774	595-601*	LG 400
139774	95-601*	LG 423
139775	195-019	LG 466
139775	596-900*	LG 380
139775	96-900*	LG 526
139868	76-015	LG 804
140218	75-196	LG 290
140294	175-000	LG 262
140294	75-000	LG 262
140294MS	75-000	LG 262
140301	33-383	LG 944
140401	33-099	LG 946
140402	33-099	LG 946
140403	33-099	LG 946
140404	33-081	LG 946
141114	195-021	LG 468
141114	595-602*	LG 403
141114	95-602*	LG 403
141416	15-700	LG 259
142204	72-458	LG 1031
142600	33-110	LG 735
143427	72-458	LG 1031
143596	72-458	LG 1031
143651	82-510	LG 872
143969	95-034	LG 377
143978	95-031	LG 377
144200	175-099	LG 262
144200	75-099	LG 262
144200CS	75-099	LG 262
144200MS	75-099	LG 262
144767	595-614*	LG 459
144767	95-052	LG 398
144767	95-614*	LG 375
144959	175-197	LG 290
144959	75-197	LG 262
145 14 50-28	33-111	LG 735
145028	33-111	LG 735
145106	95-051	LG 465
145499	33-397	LG 942
145673	33-334	LG 730
145708	595-614*	LG 459
145708	95-045	LG 374
145708	95-614*	LG 375
146154	33-331	LG 730
146154	33-334	LG 730
146154	33-336	LG 730
146154CS	33-334	LG 730
146154MS	33-334	LG 730
146283	33-081	LG 946
146323	46-322	LG 701
1465	75-164	LG 262
146527	75-164	LG 262
148699	33-350	LG 949
148763	175-170	LG 290
148763	75-170	LG 290
149416	33-081	LG 946
150340	72-001	LG 1031
150340	72-458	LG 1031
150341	72-139	LG 1032
151140	45-146	LG 804
151141	45-145	LG 804
151156	72-458	LG 1031
152202	195-021	LG 468
152202	595-602*	LG 403
152202	95-602*	LG 403
152443	595-614*	LG 459
152443	95-045	LG 374
152443	95-614*	LG 375
153532	44-371	LG 834
153535	44-370	LG 834
153535CS	44-370	LG 834
153535MS	44-370	LG 834
153664	33-026	LG 947
154959	33-081	LG 946
154963	33-081	LG 946
155191	34-046	LG 824
1553H	45-205	LG 228
1553H	45-206	LG 231
1554H	45-205	LG 228
1554H	45-206	LG 231
155944	72-458	LG 1031
156493	78-053	LG 824
156546	76-041	LG 940
156581	60-108	LG 703
157013	72-458	LG 1031
157033	595-614*	LG 459
157033	95-052	LG 398
157033	95-614*	LG 375
157101	195-021	LG 468
157101	595-602*	LG 403
157101	95-602*	LG 403
157179	72-458	LG 1031
157769	75-164	LG 262
158913	33-397	LG 942
159267	595-621*	LG 467
159267	95-071	LG 402
159267	95-621*	LG 402
159705	595-614*	LG 459
159705	95-052	LG 398
159705	95-614*	LG 375
160395	76-042	LG 939
160793	42-555	LG 803
160855	75-167	LG 289
160889	33-112	LG 735
161343	33-026	LG 947
161740	72-458	LG 1031
1629J	75-115	LG 260
163819	595-614*	LG 459
163819	95-045	LG 374
163819	95-614*	LG 375
163968	33-376	LG 942
165481	85-034	LG 908
165482	85-034	LG 908
165555	15-704	LG 311
165626	78-045	LG 828
165631	15-705	LG 315
165632	75-897	LG 262
165746	72-312	LG 1038
165833	595-621*	LG 467
165833	95-057	LG 380
165833	95-621*	LG 402
166060	75-911	LG 262
166917	72-458	LG 1031
168552	60-108	LG 703
169022	05-022	LG 913
169178	15-708	LG 312
169416	33-081	LG 946
169417	33-081	LG 946
169676	60-525	LG 702
169778	15-223	LG 259
169832	45-142	LG 939
170140	15-711	LG 259
170146	81-013	LG 802
170263	72-458	LG 1031
170698	595-614*	LG 459
170698	95-052	LG 398
170698	95-614*	LG 375
173436	44-370	LG 834
173437	78-054	LG 824
173438	34-046	LG 824
173535	44-371	LG 834
173901	78-053	LG 824
173920	195-062	LG 376
173920	596-615*	LG 529
173920	96-615*	LG 461
173921	596-615*	LG 529
173921	95-068	LG 376
173921	96-615*	LG 461
174356	82-015	
174358	82-015	
174367	33-122-1	LG 734
174368	75-912	LG 255
174368A	175-912	LG 291
174368A	75-912	LG 255
174369	175-654	LG 263
174369	75-654	LG 263
174549	45-257	LG 245
174651	33-081	LG 946
174652	33-081	LG 946
174653	33-081	LG 946
174762	73-052	LG 850
174762X431	73-052	LG 850
174762X479	73-052	LG 850
174873	72-031	LG 1038
174883	175-913	LG 262
174883	75-913	LG 291
174978	75-898	LG 262
175064	595-621*	LG 467
175064	95-057	LG 380
175064	95-621*	LG 402
175121	45-143	LG 939
175436	75-914	LG 291
175442	33-376	LG 942
175566	33-376	LG 942
175689	76-031	LG 804
175820	78-052	LG 824
176066	72-313	LG 1038
176084	595-614*	LG 459
176084	95-052	LG 398
176084	95-614*	LG 375
176138	33-026	LG 947
176556	60-107	LG 703
177284	78-051	LG 824
177968	78-013	LG 825
178138	115-029	LG 255
178777	73-053	LG 850
178777X431	73-053	LG 850
178777X479	73-053	LG 850
179092	15-712	LG 260
179114	78-056	LG 825
179748	05-021	LG 913
180054	195-062	LG 376
180054	596-615*	LG 529
180054	96-615*	LG 461
180074	82-225	LG 871
180214	75-899	LG 263
180755	72-458	LG 1031
180767	72-014	LG 1031
180773	72-076	LG 1031
180775	72-077	LG 1031
180808	175-654	LG 263
180808	75-654	LG 263
182158	60-000	LG 702
182212	15-224	LG 260
183281	60-110	LG 703
183533	115-222	LG 264
183567	60-109	LG 703
183688	15-225	LG 260
184058	78-014	LG 825
184093	73-052	LG 850
184094	73-053	LG 850
184588	60-103	LG 702
184590	65-002	LG 340
185476	15-226	LG 260
187254	195-072	LG 530
187254	595-605*	LG 422
187254	95-605*	LG 463
187255	595-605*	LG 422
187255	95-082	LG 372
187255	95-605*	LG 463
187256	195-072	LG 530
187256	595-605*	LG 422
187256	95-605*	LG 463
187281	82-126	LG 873
187283	75-810	LG 257
187284	78-051	LG 824
187291	85-032	
187292	82-026	LG 872
187690	09-260	LG 870
188606	72-162	LG 1038
189028	195-067	LG 380
189028	595-621*	LG 467
189028	95-621*	LG 402
189182	60-104	LG 702
189403	76-039	LG 1037
189993	78-014	LG 825
191273	175-810	LG 263
191273	75-810	LG 257
191723	75-810	LG 257
192682	595-602*	LG 403
192682	95-073	LG 533
192682	95-602*	LG 403
192870	82-026	LG 872
193144	72-001	LG 1031
193144	72-458	LG 1031
193214	75-892	LG 255
193350	33-376	LG 942
1935957	595-024*	LG 465
1935957	95-024	LG 465
193707	65-002	LG 340
193825	65-007	LG 342
193957	195-003	LG 400
193957	595-601*	LG 400
193957	95-601*	LG 423
194231x427	72-033	LG 1031
194231X460	72-138	LG 1032
194346	15-227	LG 260
195945	78-062	LG 835
196103	115-205	LG 258
196103	175-893	LG 263
196853	15-228	LG 260
196857	15-020	LG 291
197242	175-894	LG 291
197242	75-894	LG 263
197253	15-021	LG 256
197253	175-895	LG 263
197253	75-895	LG 263
2008J	33-331	LG 730
2008J	33-334	LG 730
2008J	33-335	LG 730
2008J	33-336	LG 730
204114-884	95-044	LG 465
204335256	195-021	LG 468
204335256	595-602*	LG 403
204335256	95-602*	LG 403
204340218	95-044	LG 465
21037	33-386	LG 942
21261	33-334	LG 730
21261	33-335	LG 730
21261	33-336	LG 730
2210R	33-386	LG 942
2295R	75-179	LG 310
2413J	49-834	LG 611
2421J	49-810	LG 612

X

* OREGON® Gator™ replacement blade

OEM No.	OREGON	Page
AYP		
24285	33-335	LG 730
24285	33-336	LG 730
24541	595-605*	LG 422
24541	95-082	LG 372
24541	95-605*	LG 463
24676	195-005	LG 373
24676	596-900*	LG 380
24676	96-900*	LG 526
24692	195-003	LG 400
24692	595-601*	LG 400
24692	95-601*	LG 423
25034	95-014	LG 374
25034	95-607*	LG 397
25036	95-015	LG 400
25322	95-011	
2683	33-393	LG 943
2683R	33-393	LG 943
33256	195-021	LG 468
33256	595-602*	LG 403
33256	95-602*	LG 403
3366R	45-073	LG 227
3367R	33-334	LG 730
3367R	33-335	LG 730
3367R	33-336	LG 730
33954	195-072	LG 530
33954	595-605*	LG 422
33954	95-605*	LG 463
340218	95-044	LG 465
3483	35-010	LG 809
3541R	75-168	LG 310
3612R	33-386	LG 942
3621R	33-386	LG 942
365401R	33-386	LG 942
365402	33-386	LG 942
3716R	75-934	LG 310
371979	07-102	LG 774
372644	35-006	LG 808
3L5402	33-386	LG 942
401603	15-229	LG 260
403107	596-370*	LG 427
403107	95-074	LG 533
403107	96-370*	LG 533
405143	15-022	LG 292
405380	195-070	LG 469
405380	596-370*	LG 427
405380	96-370*	LG 533
406706	595-621*	LG 467
406706	95-057	LG 380
406706	95-621*	LG 402
406707	595-602*	LG 403
406707	95-073	LG 533
406707	95-602*	LG 403
406712	595-621*	LG 467
406712	95-057	LG 380
406712	95-621*	LG 402
406713	595-602*	LG 403
406713	95-023	LG 380
406713	95-602*	LG 403
407755x427	72-136	LG 1032
407755x460	72-137	LG 1032
407816	60-102	LG 702
408007	115-220	LG 264
408010	115-222	LG 264
408010	15-230	LG 260
408019	115-221	LG 862
419271	15-231	LG 260
419273	595-807*	LG 382
419273X431	595-807*	LG 382
419274	595-807*	LG 382
420097	65-008	LG 340
420463	95-076	LG 404
420463	95-615*	LG 426
42174	72-106	LG 1029
421825	95-076	LG 404
421825	95-615*	LG 426
422719	195-005	LG 373
422719	596-900*	LG 380
422719	96-900*	LG 526
424752	195-005	LG 373
424752	596-900*	LG 380
424752	96-900*	LG 526
428454	115-223	LG 250
429636	15-023	LG 256
429636	75-975	LG 294
432133957	72-094	LG 1042
437747	76-043	LG 940
4406R	33-386	LG 942
440855	60-101	LG 702
440LR	33-386	LG 942
44429	33-334	LG 730
44429	33-335	LG 730
44429	33-336	LG 730
4445H1	71-800	LG 956
4459J	84-102	LG 954
4460J	84-103	LG 954
4702H	34-003	LG 821
4827H	34-030	LG 821
4933H	34-005	LG 821
4933H	34-006	LG 821
506 90 96-01	33-019	LG 948
5091H	75-179	LG 310
5091H	75-208	LG 277
511404	33-386	LG 942
512258301	195-062	LG 376
512258301	596-615*	LG 529
512258301	96-615*	LG 461
513897001	195-033	LG 400
513897001	595-601*	LG 400
513897001	95-601*	LG 423
521981601	596-900*	LG 380
521981601	96-900*	LG 526
5276R	83-300	LG 819
53018	34-030	LG 821
531005085	195-005	LG 373
531005085	596-900*	LG 380
531005085	96-900*	LG 526
531007562	75-099	LG 262
531300765	195-067	LG 380
531300765	595-621*	LG 467
531300765	95-621*	LG 402
531301252	195-021	LG 468
531301252	595-602*	LG 403
531301252	95-602*	LG 403
531307212	95-044	LG 465
531307214	195-021	LG 468
531307214	595-602*	LG 403
531307214	95-602*	LG 403
531307220	195-003	LG 400
531307220	595-601*	LG 400
531307220	95-601*	LG 423
531307221	195-033	LG 400
531307221	595-601*	LG 400
531307221	95-601*	LG 423
531307223	195-005	LG 373
531307223	596-900*	LG 380
531307223	96-900*	LG 526
531307224	195-032	LG 425
531307224	596-900*	LG 380
531307224	96-900*	LG 526
531307235	595-621*	LG 467
531307235	95-071	LG 402
531307235	95-621*	LG 402
531307236	195-021	LG 468
531307236	595-602*	LG 403
531307236	95-602*	LG 403
531307237	195-021	LG 468
531307237	595-602*	LG 403
531307237	95-602*	LG 403
531309715	596-370*	LG 427
531309715	95-074	LG 533
531309715	96-370*	LG 533
532 00 90-40	45-057	LG 249
532 10 29-72	33-397	LG 942
532 10 95-53	33-028	LG 947
532 12 13-05	33-019	LG 948
532 14 03-01	33-383	LG 944
532 14 04-04	33-081	LG 946
532 14 54-99	33-397	LG 942
532 15 36-64	33-026	LG 947
532 15 89-13	33-397	LG 942
532 16 39-68	33-376	LG 942
532 16 94-17	33-081	LG 946
532 17 43-67	33-122-1	LG 734
532 17 46-51	33-081	LG 946
532 17 55-66	33-376	LG 942
532 17 61-38	33-026	LG 947
532009040	45-057	LG 249
532025034	95-014	LG 374
532025034	95-607*	LG 397
532059904	71-102	LG 956
532065139	71-002	LG 957
532069832	45-142	LG 939
532104360	34-046	LG 824
532106085	75-107	LG 254
532106635	95-014	LG 374
532106635	95-607*	LG 397
532106734	05-020	LG 913
532108218	33-110	LG 735
532108824	33-035	LG 742
532109081	33-331	LG 730
532109081	33-334	LG 730
532109553	33-028	LG 947
532109748	33-317-0	LG 729
532109946	33-331	LG 730
532110485	45-257	LG 245
532110883	75-108	LG 289
532110884	75-194	LG 289
532114884	95-044	LG 465
532120754	45-128	LG 228
532121263	95-031	LG 377
532121305	33-019	LG 948
532121617	82-679	LG 870
532121622	82-680	LG 870
532121658	82-680	LG 870
532121676	82-678	LG 904
532121704	82-495	LG 870
532121705	82-495	LG 870
532122265	95-014	LG 374
532122265	95-607*	LG 397
532123713X	05-020	LG 913
532124937	45-073	LG 227
532124959	45-057	LG 249
532124970	75-890	LG 289
532125907	75-171	LG 289
532126338	95-034	LG 377
532126520	75-935	LG 255
532126847	45-128	LG 228
532127841	595-613*	LG 463
532127841	95-036	LG 463
532127841	95-613*	LG 463
532127842	195-033	LG 400
532127842	595-601*	LG 400
532127842	95-601*	LG 423
532128774	82-220	LG 871
532129206	44-371	LG 834
532129277	95-051	LG 465
532129861	44-370	LG 834
532130652	95-006	LG 397
532130794	82-014	LG 871
532130794	82-225	LG 871
532130801	75-167	LG 289
532130861	46-325	LG 701
532130969	75-106	LG 261
532131264	75-097	LG 289
532131290	75-099	LG 262
532131290	75-936	LG 290
532131322	595-601*	LG 400
532131322	95-047	LG 378
532131322	95-601*	LG 423
532131323	195-048	LG 430
532131323	596-900*	LG 380
532131323	96-900*	LG 526
532131491	76-034	
532131494	34-046	LG 824
532132801	75-889	LG 252
532133035	75-890	LG 289
532133107	60-105	LG 702
532133346	95-051	LG 465
532134148	195-003	LG 400
532134148	595-601*	LG 400
532134148	95-601*	LG 423
532134149	195-005	LG 373
532134149	596-900*	LG 380
532134149	96-900*	LG 526
532134768	195-021	LG 468
532134768	595-602*	LG 403
532134768	95-602*	LG 403
532134871	95-051	LG 465
532136572	44-302	LG 841
532136818	82-680	LG 870
532136874	76-040	LG 941
532137078	75-164	LG 262
532137140	33-110	LG 735
532137152	82-221	LG 872
532137153	75-195	LG 254
532137380	595-609*	LG 461
532137380	95-018	LG 399
532137380	95-609*	LG 376
532137553	85-023	LG 907
532137646	85-017	LG 907
532138255	75-167	LG 289
532138406	33-331	LG 730
532138496	595-613*	LG 463
532138496	95-036	LG 463
532138496	95-613*	LG 463
532138497	195-033	LG 400
532138497	595-601*	LG 400
532138497	95-601*	LG 423
532138498	195-032	LG 425
532138498	596-900*	LG 380
532138498	96-900*	LG 526
532138970	195-033	LG 400
532138970	595-601*	LG 400
532138970	95-601*	LG 423
532138971	195-032	LG 425
532138971	596-900*	LG 380
532138971	96-900*	LG 526
532139245	34-049	LG 824
532139573	75-169	LG 290
532139774	195-003	LG 400
532139774	595-601*	LG 400
532139774	95-601*	LG 423
532139775	195-019	LG 466
532139775	596-900*	LG 380
532139775	96-900*	LG 526
532139868	76-015	LG 804
532140126	72-458	LG 1031
532140218	75-196	LG 290
532140294	75-000	LG 262
532140301	33-383	LG 944
532140401	33-099	LG 946
532141114	195-021	LG 468
532141114	595-602*	LG 403
532141114	95-602*	LG 403
532141416	15-700	LG 259
532142600	33-110	LG 735
532143651	82-510	LG 872
532-143651	82-510	LG 872
532143669	95-034	LG 377

X

* OREGON® Gator™ replacement blade

2019 OEM X-Reference

OEM No.	OREGON	Page
AYP		
532143978	95-031	LG 377
532144200	75-099	LG 262
532144767	595-614*	LG 459
532144767	95-052	LG 398
532144767	95-614*	LG 375
532144959	75-197	LG 262
532145028	33-111	LG 735
532145106	95-051	LG 465
532145367	33-122-1	LG 734
532145499	33-397	LG 942
532145708	595-614*	LG 459
532145708	95-045	LG 374
532145708	95-614*	LG 375
532146154	33-336	LG 730
532146323	46-322	LG 701
532146527	75-164	LG 262
532148699	33-350	LG 949
532148763	75-170	LG 290
532150341	72-139	LG 1032
532151140	45-146	LG 804
532151141	45-145	LG 804
532152202	195-021	LG 468
532152202	595-602*	LG 403
532152202	95-602*	LG 403
532152443	595-614*	LG 459
532152443	95-045	LG 374
532152443	95-614*	LG 375
532153532	44-371	LG 834
532153535	44-370	LG 834
532153664	33-026	LG 947
532154959	33-081	LG 946
532155099	45-144	LG 941
532155106	45-144	LG 941
532156546	76-041	LG 940
532156581	60-108	LG 703
532157033	595-614*	LG 459
532157033	95-052	LG 398
532157033	95-614*	LG 375
532157353	595-614*	LG 459
532157353	95-052	LG 398
532157353	95-614*	LG 375
532157769	75-164	LG 262
532158913	33-397	LG 942
532159267	595-621*	LG 467
532159267	95-071	LG 402
532159267	95-621*	LG 402
532159705	595-614*	LG 459
532159705	95-052	LG 398
532159705	95-614*	LG 375
532160395	76-042	LG 939
532160793	42-555	LG 803
532160889	33-112	LG 735
532165631	15-705	LG 315
532165632	75-897	LG 262
532165746	72-312	LG 1038
532165833	595-621*	LG 467
532165833	95-057	LG 380
532165833	95-621*	LG 402
532166060	75-911	LG 262
532168552	60-108	LG 703
532169416	33-081	LG 946
532169417	33-081	LG 946
532169676	60-525	LG 702
532170140	15-711	LG 259
532170698	595-614*	LG 459
532170698	95-052	LG 398
532170698	95-614*	LG 375
532173436	44-370	LG 834
532173437	78-054	LG 824
532173920	195-062	LG 376
532173920	596-615*	LG 529
532173920	96-615*	LG 461
532173921	596-615*	LG 529
532173921	95-068	LG 376
532173921	96-615*	LG 461
532174356	82-015	
532174358	82-015	
532174367	33-122-1	LG 734
532174368	75-912	LG 255
532174651	33-081	LG 946
532174652	33-081	LG 946
532174653	33-081	LG 946
532174762	73-052	LG 850
532174762	73-053	LG 850
532174873	72-031	LG 1038
532174883	75-913	LG 291
532175064	595-621*	LG 467
532175064	95-057	LG 380
532175064	95-621*	LG 402
532175067	60-525	LG 702
532175121	45-143	LG 939
532175436	75-914	LG 291
532175566	33-376	LG 942
532175689	76-031	LG 804
532175820	78-052	LG 824
532176066	72-313	LG 1038
532176084	595-614*	LG 459
532176084	95-052	LG 398
532176084	95-614*	LG 375
532176135	595-621*	LG 467
532176135	95-057	LG 380
532176135	95-621*	LG 402
532176138	33-026	LG 947
532176556	60-107	LG 703
532177968	78-013	LG 825
532178138	115-029	LG 255
532178138	15-029	LG 291
532178777	73-053	LG 850
532179114	78-056	LG 825
532179748	05-021	LG 913
532180054	195-062	LG 376
532180054	596-615*	LG 529
532180054	96-615*	LG 461
532180074	82-225	LG 871
532180767	72-014	LG 1031
532180773	72-076	LG 1031
532180775	72-077	LG 1031
532180808	75-654	LG 263
532183567	60-109	LG 703
532183724	81-013	LG 802
532184058	78-014	LG 825
532184093	73-052	LG 850
532184094	73-053	LG 850
532184588	60-103	LG 702
532184590	65-002	LG 340
532187254	195-072	LG 530
532187254	595-605*	LG 422
532187254	95-605*	LG 463
532187255	595-605*	LG 422
532187255	95-082	LG 372
532187255	95-605*	LG 463
532187256	195-072	LG 530
532187256	595-605*	LG 422
532187256	95-605*	LG 463
532187283	75-810	LG 257
532187284	78-051	LG 824
532187291	85-032	
532187292	82-026	LG 872
532187960	09-260	LG 870
532189028	195-067	LG 380
532189028	595-621*	LG 467
532189028	95-621*	LG 402
532189182	60-104	LG 702
532189993	78-014	LG 825
532191273	75-810	LG 257
532191723	75-810	LG 257
532192682	595-602*	LG 403
532192682	95-073	LG 533
532192682	95-602*	LG 403
532192870	82-026	LG 872
532193144	72-458	LG 1031
532193214	75-892	LG 255
532193707	65-002	LG 340
532193957	195-003	LG 400
532193957	595-601*	LG 400
532193957	95-601*	LG 423
53219478	75-898	LG 262
532196103	115-205	LG 258
532196103	175-893	LG 263
532196103	75-893	LG 263
532196857	15-020	LG 291
532197242	75-894	LG 263
532197253	15-021	LG 256
532197253	75-895	LG 263
532197257	60-526	LG 702
53219946	33-334	LG 730
532283281	60-110	LG 703
532365402	33-386	LG 942
532403107	596-370*	LG 427
532403107	95-074	LG 533
532403107	96-370*	LG 533
532405143	15-022	LG 292
532405380	195-070	LG 469
532405380	596-370*	LG 427
532405380	96-370*	LG 533
532406707	595-602*	LG 403
532406707	95-073	LG 533
532406707	95-602*	LG 403
532406712	595-621*	LG 467
532406712	95-057	LG 380
532406712	95-621*	LG 402
532406713	595-602*	LG 403
532406713	95-023	LG 380
532406713	95-602*	LG 403
532407816	60-102	LG 702
532408007	115-220	LG 264
532408010	115-222	LG 264
532408019	115-221	LG 862
532408714	60-526	LG 702
532419273	595-807*	LG 382
532419274	595-807*	LG 382
532420097	65-008	LG 340
532420463	95-076	LG 404
532420463	95-615*	LG 426
532421825	95-076	LG 404
532421825	95-615*	LG 426
532422719	195-005	LG 373
532422719	596-900*	LG 380
532422719	96-900*	LG 526
532424752	195-005	LG 373
532424752	596-900*	LG 380
532424752	96-900*	LG 526
532428454	115-223	LG 250
532428460	60-101	LG 702
532429636	15-023	LG 256
532435111	60-526	LG 702
532436122	73-052	LG 850
532436125	73-053	LG 850
532437601	95-076	LG 404
532437601	95-615*	LG 426
532440855	60-101	LG 702
532700417	60-004	LG 701
532700972	95-051	LG 465
532751646	95-051	LG 465
532752233	95-044	LG 465
532752234	195-021	LG 468
532752234	595-602*	LG 403
532752234	95-602*	LG 403
532850972	595-024*	LG 465
532850972	95-024	LG 465
532850973	595-602*	LG 403
532850973	95-023	LG 380
532850973	95-602*	LG 403
532850977	65-006	LG 340
532851462	60-000	LG 702
532851514	65-007	LG 342
535126520	75-935	LG 255
5375	78-043	LG 824
539 10 10-80	33-028	LG 947
539 10 17-68	33-081	LG 946
539 92 34-08	33-027	LG 947
539101080	33-028	LG 947
539107519	195-062	LG 376
539107519	596-615*	LG 529
539107519	96-615*	LG 461
539107610	72-094	LG 1042
539110324	195-003	LG 400
539110324	595-601*	LG 400
539110324	95-601*	LG 423
539110411	15-472	LG 259
539110460	195-005	LG 373
539110460	596-900*	LG 380
539110460	96-900*	LG 526
539110832	15-473	LG 288
539111878	195-067	LG 380
539111878	595-621*	LG 467
539111878	95-621*	LG 402
539112053	195-072	LG 530
539112053	595-605*	LG 422
539112053	95-605*	LG 463
539112529	15-474	LG 288
539174651	33-081	LG 946
539174652	33-081	LG 946
544080204	595-024*	LG 465
544080204	95-024	LG 465
545140301	33-383	LG 944
55139204	595-024*	LG 465
55139204	95-024	LG 465
55941	75-168	LG 310
56823	75-179	LG 310
574 45 54-01	33-383	LG 944
574292401	195-072	LG 530
574292401	595-605*	LG 422
574292401	95-605*	LG 463
575157101	195-021	LG 468
575157101	595-602*	LG 403
575157101	95-602*	LG 403
575164601	95-051	LG 465
575937901	195-070	LG 469
575937901	596-370*	LG 427
575937901	96-370*	LG 533
575938201	195-062	LG 376
575938201	596-615*	LG 529
575938201	96-615*	LG 461
575938301	195-062	LG 376
575938301	596-615*	LG 529
575938301	96-615*	LG 461
575938401	195-072	LG 530
575938401	595-605*	LG 422
575938401	95-605*	LG 463
575938501	595-605*	LG 422
575938501	95-082	LG 372
575938501	95-605*	LG 463
577203109	45-057	LG 249
577203119	45-257	LG 245
5797H	33-386	LG 942
580244001	95-615*	LG 426
580258101	595-621*	LG 467
580258101	95-621*	LG 402
580258102	595-621*	LG 467
580258102	95-621*	LG 402
582931401	595-602*	LG 403
582931401	95-073	LG 533
582931401	95-602*	LG 403
583068901	33-376	LG 942
585587701	95-615*	LG 426
5920H	45-057	LG 249
59311	75-321	LG 334
59904	71-102	LG 956

X

* OREGON® Gator™ replacement blade

OEM No.	OREGON	Page
AYP		
6109J	34-011	LG 821
625J	45-079	LG 249
62828	15-715	LG 315
63688	81-012	LG 802
6474H	75-208	LG 277
64906	45-087	LG 243
65139	71-002	LG 957
6554J	84-102	LG 954
6555J	84-103	LG 954
66465	71-500	
66507	45-079	LG 249
6774H	75-208	LG 277
677A880	33-331	LG 730
677A880	33-334	LG 730
677A880	33-335	LG 730
677A880	33-336	LG 730
69229	595-024*	LG 465
69229	95-024	LG 465
6944R	75-168	LG 310
700417	60-004	LG 701
700953	72-458	LG 1031
700973	195-021	LG 468
700973	595-602*	LG 403
700973	95-602*	LG 403
701211	595-024*	LG 465
701211	95-024	LG 465
701213	595-602*	LG 403
701213	95-023	LG 380
701213	95-602*	LG 403
701575	72-003	LG 1031
701575	72-458	LG 1031
702245	72-456	LG 1036
7133203	595-024*	LG 465
7133203	95-024	LG 465
7133219	595-602*	LG 403
7133219	95-023	LG 380
7133219	95-602*	LG 403
7133269	195-021	LG 468
7133269	595-602*	LG 403
7133269	95-602*	LG 403
7151J	71-277	LG 956
7152J	71-104	LG 956
7154J	71-105	LG 957
71577	33-386	LG 942
72215	78-043	LG 824
72841	33-386	LG 942
7486H	33-386	LG 942
74977	15-716	LG 315
74R	33-386	LG 942
750124	72-458	LG 1031
750851	72-458	LG 1031
751646	95-051	LG 465
752233	95-044	LG 465
752234	195-021	LG 468
752234	595-602*	LG 403
752234	95-602*	LG 403
75672	34-031	LG 821
75673	34-002	LG 821
77193957	595-024*	LG 465
77193957	95-024	LG 465
7754R	33-331	LG 730
7754R	33-334	LG 730
7754R	33-335	LG 730
7754R	33-336	LG 730
777134149	195-005	LG 373
777134149	596-900*	LG 380
777134149	96-900*	LG 526
777187256	195-072	LG 530
777187256	595-605*	LG 422
777187256	95-605*	LG 463
777193957	195-003	LG 400
777193957	595-601*	LG 400
777193957	95-601*	LG 423
777405380	195-070	LG 469
777405380	596-370*	LG 427
777405380	96-370*	LG 533
777419274	595-807*	LG 382
7838R	45-109	LG 939
78777	73-053	LG 850
801156	72-458	LG 1031
81200029	02-020	
83059	49-170	LG 758
83079	55-820	LG 935
850053	15-717	LG 260
850690	72-458	LG 1031
850972	595-024*	LG 465
850972	95-024	LG 465
8509725	595-024*	LG 465
8509725	95-024	LG 465
850973	595-602*	LG 403
850973	95-023	LG 380
850973	95-602*	LG 403
850977	65-006	LG 340
850986	72-456	LG 1036
851462	60-000	LG 702
851514	65-007	LG 342
88074	15-718	LG 259
88558	72-458	LG 1031
9040	45-057	LG 249
9040H	45-043	LG 243
9040H	45-057	LG 249
9040HR	45-057	LG 249
913532193957	595-024*	LG 465
913532193957	95-024	LG 465
917109946X	33-334	LG 730
917110485XCS	45-257	LG 245
917110485XMS	45-257	LG 245
917121263X	95-031	LG 377
917121263XMS	95-031	LG 377
917122265X	95-014	LG 374
917122265X	95-607*	LG 397
917126338X	95-034	LG 377
917127842	195-033	LG 400
917127842	595-601*	LG 400
917127842	95-601*	LG 423
917127843	195-032	LG 425
917127843	596-900*	LG 380
917127843	96-900*	LG 526
917129277	95-051	LG 465
917130652MS	95-006	LG 397
917131322	595-601*	LG 400
917131322	95-047	LG 378
917131322	95-601*	LG 423
917131323	195-032	LG 425
917131323	596-900*	LG 380
917131323	96-900*	LG 526
917131694	95-051	LG 465
917134148MS	195-003	LG 400
917134148MS	595-601*	LG 400
917134148MS	95-601*	LG 423
917134148X	195-003	LG 400
917134148X	595-601*	LG 400
917134148X	95-601*	LG 423
917137380MS	595-609*	LG 461
917137380MS	95-018	LG 399
917137380MS	95-609*	LG 376
917137380P	595-609*	LG 461
917137380P	95-018	LG 399
917137380P	95-609*	LG 376
917138497MS	195-033	LG 400
917138497MS	595-601*	LG 400
917138497MS	95-601*	LG 423
917138498MS	195-032	LG 425
917138498MS	596-900*	LG 380
917138498MS	96-900*	LG 526
917138970	195-033	LG 400
917138970	595-601*	LG 400
917138970	95-601*	LG 423
917139774	195-003	LG 400
917139774	595-601*	LG 400
917139774	95-601*	LG 423
917139774MS	195-003	LG 400
917139774MS	595-601*	LG 400
917139774MS	95-601*	LG 423
917139775P	195-019	LG 466
917139775P	596-900*	LG 380
917139775P	96-900*	LG 526
917144767	595-614*	LG 459
917144767	95-052	LG 398
917144767	95-614*	LG 375
917145106CS	595-024*	LG 465
917145106CS	95-024	LG 465
917145106CS	95-051	LG 465
917145499	33-397	LG 942
917145499CS	33-397	LG 942
917145499MS	33-397	LG 942
917145708	595-614*	LG 459
917145708	95-045	LG 374
917145708	95-614*	LG 375
917145708CS	595-614*	LG 459
917145708CS	95-045	LG 374
917145708CS	95-614*	LG 375
917145708MS	595-614*	LG 459
917145708MS	95-045	LG 374
917145708MS	95-614*	LG 375
917146283	33-081	LG 946
917152443P	595-614*	LG 459
917152443P	95-045	LG 374
917152443P	95-614*	LG 375
917153664	33-026	LG 947
917154959	33-081	LG 946
917154963	33-081	LG 946
917157033	595-614*	LG 459
917157033	95-052	LG 398
917157033	95-614*	LG 375
917157101	195-021	LG 468
917157101	595-602*	LG 403
917157101	95-602*	LG 403
917163819	595-614*	LG 459
917163819	95-045	LG 374
917163819	95-614*	LG 375
917169416	33-081	LG 946
917169417	33-081	LG 946
917170698	595-614*	LG 459
917170698	95-052	LG 398
917170698	95-614*	LG 375
917173920	195-062	LG 376
917173920	596-615*	LG 529
917173920	96-615*	LG 461
917174652	33-081	LG 946
917174653	33-081	LG 946
917175064	595-621*	LG 467
917175064	95-057	LG 380
917175064	95-621*	LG 402
917175064PB	595-621*	LG 467
917175064PB	95-057	LG 380
917175064PB	95-621*	LG 402
917176135	595-621*	LG 467
917176135	95-057	LG 380
917176135	95-621*	LG 402
917178777X431	73-053	LG 850
917187254	195-072	LG 530
917187254	595-605*	LG 422
917187254	95-605*	LG 463
917192682	595-602*	LG 403
917192682	95-073	LG 533
917192682	95-602*	LG 403
917192682X431	595-602*	LG 403
917192682X431	95-073	LG 533
917192682X431	95-602*	LG 403
91724676	195-005	LG 373
91724676	596-900*	LG 380
91724676	96-900*	LG 526
91724691	95-015	LG 400
91733219	595-602*	LG 403
91733219	95-023	LG 380
91733219	95-602*	LG 403
91733256	195-021	LG 468
91733256	595-602*	LG 403
91733256	95-602*	LG 403
91733269	195-021	LG 468
91733269	595-602*	LG 403
91733269	95-602*	LG 403
917436700	33-122-1	LG 734
917436702	33-122-1	LG 734
917436734	33-122-1	LG 734
917532062828	15-715	LG 315
917532109553	33-028	LG 947
917532121263	95-031	LG 377
917532127841	595-613*	LG 463
917532127841	95-036	LG 463
917532127841	95-613*	LG 463
917532129277	95-051	LG 465
917532130652	95-006	LG 397
917532134148	195-003	LG 400
917532134148	595-601*	LG 400
917532134148	95-601*	LG 423
917532134768	195-021	LG 468
917532134768	595-602*	LG 403
917532134768	95-602*	LG 403
917532137380	595-609*	LG 461
917532137380	95-018	LG 399
917532137380	95-609*	LG 376
917532138496	595-613*	LG 463
917532138496	95-036	LG 463
917532138496	95-613*	LG 463
917532138497	195-033	LG 400
917532138497	595-601*	LG 400
917532138497	95-601*	LG 423
917532138498	195-032	LG 425
917532138498	596-900*	LG 380
917532138498	96-900*	LG 526
917532138970	195-033	LG 400
917532138970	595-601*	LG 400
917532138970	95-601*	LG 423
917532139774	195-003	LG 400
917532139774	595-601*	LG 400
917532139774	95-601*	LG 423
917532139775	195-019	LG 466
917532139775	596-900*	LG 380
917532139775	96-900*	LG 526
917532140301	33-383	LG 944
917532141114	195-021	LG 468
917532141114	595-602*	LG 403
917532141114	95-602*	LG 403
917532141416	15-700	LG 259
917532142600	33-110	LG 735
917532144767	595-614*	LG 459
917532144767	95-052	LG 398
917532144767	95-614*	LG 375
917532145028	33-111	LG 735
917532145499	33-397	LG 942
917532145708	595-614*	LG 459
917532145708	95-045	LG 374
917532145708	95-614*	LG 375
917532152443	595-614*	LG 459
917532152443	95-045	LG 374
917532152443	95-614*	LG 375
917532153664	33-026	LG 947
917532154959	33-081	LG 946
917532157353	595-614*	LG 459
917532157353	95-052	LG 398
917532157353	95-614*	LG 375
917532159267	595-621*	LG 467
917532159267	95-071	LG 402
917532159267	95-621*	LG 402
917532160889	33-112	LG 735
917532165631	15-705	LG 315
917532165833	595-621*	LG 467

X

2019 OEM X-Reference

OEM No.	OREGON	Page
AYP		
917532165833	95-057	LG 380
917532165833	95-621*	LG 402
917532169416	33-081	LG 946
917532170140	15-711	LG 259
917532170698	595-614*	LG 459
917532170698	95-052	LG 398
917532170698	95-614*	LG 375
917532173920	195-062	LG 376
917532173920	596-615*	LG 529
917532173920	96-615*	LG 461
917532173921	596-615*	LG 529
917532173921	95-068	LG 376
917532173921	96-615*	LG 461
917532174367	33-122-1	LG 734
917532174651	33-081	LG 946
917532174653	33-081	LG 946
917532174762	73-052	LG 850
917532175064	595-621*	LG 467
917532175064	95-057	LG 380
917532175064	95-621*	LG 402
917532175566	33-376	LG 942
917532176084	595-614*	LG 459
917532176084	95-052	LG 398
917532176084	95-614*	LG 375
917532176135	595-621*	LG 467
917532176135	95-057	LG 380
917532176135	95-621*	LG 402
917532176138	33-026	LG 947
917532180054	195-062	LG 376
917532180054	596-615*	LG 529
917532180054	96-615*	LG 461
917532187254	195-072	LG 530
917532187254	595-605*	LG 422
917532187254	95-605*	LG 463
917532187255	595-605*	LG 422
917532187255	95-082	LG 372
917532187255	95-605*	LG 463
917532187256	195-072	LG 530
917532187256	595-605*	LG 422
917532187256	95-605*	LG 463
917532192682	595-602*	LG 403
917532192682	95-073	LG 533
917532192682	95-602*	LG 403
917532193957	195-003	LG 400
917532193957	595-601*	LG 400
917532193957	95-601*	LG 423
917532403107	596-370*	LG 427
917532403107	95-074	LG 533
917532403107	96-370*	LG 533
917532405380	195-070	LG 469
917532405380	596-370*	LG 427
917532405380	96-370*	LG 533
917532406707	595-602*	LG 403
917532406707	95-073	LG 533
917532406707	95-602*	LG 403
917532406713	595-602*	LG 403
917532406713	95-023	LG 380
917532406713	95-602*	LG 403
917532419273	595-807*	LG 382
917532420463	95-076	LG 404
917532420463	95-615*	LG 426
917532421825	95-076	LG 404
917532421825	95-615*	LG 426
917532422719	195-005	LG 373
917532422719	596-900*	LG 380
917532422719	96-900*	LG 526
917532424752	195-005	LG 373
917532424752	596-900*	LG 380
917532424752	96-900*	LG 526
917532751646	95-051	LG 465
917532752233	95-044	LG 465
917532752234	195-021	LG 468
917532752234	595-602*	LG 403
917532752234	95-602*	LG 403
917532850972	595-024*	LG 465
917532850972	95-024	LG 465
917532850972MS	595-024*	LG 465
917532850972MS	95-024	LG 465
917532850973	595-602*	LG 403
917532850973	95-023	LG 380
917532850973	95-602*	LG 403
917539101080	33-028	LG 947
917539107519	195-062	LG 376
917539107519	596-615*	LG 529
917539107519	96-615*	LG 461
917539110460	195-005	LG 373
917539110460	596-900*	LG 380
917539110460	96-900*	LG 526
917539110832	15-473	LG 288
917539112053	195-072	LG 530
917539112053	595-605*	LG 422
917539112053	95-605*	LG 463
91756400	595-024*	LG 465
91756400	95-024	LG 465
91756401	595-602*	LG 403
91756401	95-023	LG 380
91756401	95-602*	LG 403
917577203106	195-062	LG 376
917577203106	596-615*	LG 529
917577203106	96-615*	LG 461
917577203109	45-057	LG 249
917577203119	45-257	LG 245
917700972	95-051	LG 465
917700973	195-021	LG 468
917700973	595-602*	LG 403
917700973	95-602*	LG 403
917701211MS	595-024*	LG 465
917701211MS	95-024	LG 465
917701211X417	595-024*	LG 465
917701211X417	95-024	LG 465
917701213	595-602*	LG 403
917701213	95-023	LG 380
917701213	95-602*	LG 403
917701213MS	595-602*	LG 403
917701213MS	95-023	LG 380
917701213MS	95-602*	LG 403
917733203	595-024*	LG 465
917733203	95-024	LG 465
917751646	95-051	LG 465
917752234	195-021	LG 468
917752234	595-602*	LG 403
917752234	95-602*	LG 403
91777419274	595-807*	LG 382
917777134149	195-005	LG 373
917777134149	596-900*	LG 380
917777134149	96-900*	LG 526
917777187256	195-072	LG 530
917777187256	595-605*	LG 422
917777187256	95-605*	LG 463
917777405380	195-070	LG 469
917777405380	596-370*	LG 427
917777405380	96-370*	LG 533
9178	34-002	LG 821
917850972	595-024*	LG 465
917850972	95-024	LG 465
917850973	595-602*	LG 403
917850973	95-023	LG 380
917850973	95-602*	LG 403
917850973MS	595-602*	LG 403
917850973MS	95-023	LG 380
917850973MS	95-602*	LG 403
9179497R	95-011	
9180R	15-719	LG 312
918131494	34-046	LG 824
918152443	595-614*	LG 459
918152443	95-045	LG 374
918152443	95-614*	LG 375
918153532	44-371	LG 834
9292H	34-017	LG 821
9497R	95-011	
9541H	33-386	LG 942
954633774	195-062	LG 376
954633774	596-615*	LG 529
954633774	96-615*	LG 461
954633781	596-615*	LG 529
954633781	95-068	LG 376
954633781	96-615*	LG 461
954636867	195-005	LG 373
954636867	596-900*	LG 380
954636867	96-900*	LG 526
9581505F	44-371	LG 834
9585464	34-046	LG 824
980STD365402R	33-386	LG 942
CH11	67-005	LG 965
CH12	67-005	LG 965
CH208	67-017	LG 965
CH208A	67-017	LG 965
CH239	67-015	LG 965
LA018	67-018	LG 965
LA018AR	67-018	LG 965
LA028	67-014	LG 965
LC06	67-002	LG 965
P121687X	82-678	LG 904
STD365402	33-386	LG 942
STD365402R	33-386	LG 942
TA128	67-015	LG 965
BAD BOY		
022-5234-98	72-311-1	LG 1039
041021900	15-232	LG 266
041-0219-00	15-232	LG 266
041023600	15-233	LG 266
041-0236-00	15-233	LG 266
041025400	15-240	LG 267
041142000	15-234	LG 267
041-1420-00	15-234	LG 267
041-1420-00DC	15-234	LG 267
041147000	15-235	LG 267
041-1470-00	15-235	LG 267
041149000	15-236	LG 267
041-1490-00	15-236	LG 267
041-1560-00	15-237	LG 267
041-1650-00	115-201	LG 266
041189000	15-238	LG 267
041-1890-00	15-238	LG 267
041237500	15-239	LG 267
041-2375-00	15-239	LG 267
041252500	15-240	LG 267
041-2525-00	15-240	LG 267
041504800	15-241	LG 267
041-5048-00	15-241	LG 267
041520000	15-242	LG 267
041-5200-00	15-242	LG 267
041560000	15-237	LG 267
041-6027	15-243	LG 267
041-6027-00	15-243	LG 267
041-6027-0DF	15-243	LG 267
041640000	15-244	LG 267
041-6400-00	15-244	LG 267
063-2004-00	69-281	LG 814
063-2010-00	83-503	LG 818
063-5400-00	83-284	LG 818
063-8019-00	30-845	LG 208
41021900	15-232	LG 266
41-0219-00	15-232	LG 266
41023600	15-233	LG 266
41-0236-00	15-233	LG 266
41025400	15-240	LG 267
41-0254-00	15-240	LG 267
41142000	15-234	LG 267
41-1420-00	15-234	LG 267
41147000	15-235	LG 267
41-1470-00	15-235	LG 267
41149000	15-236	LG 267
41-1490-00	15-236	LG 267
41156000	15-237	LG 267
41-1560-00	15-237	LG 267
41189000	15-238	LG 267
41-1890-00	15-238	LG 267
41237500	15-239	LG 267
41-2375-00	15-239	LG 267
41252500	15-240	LG 267
41504800	15-241	LG 267
41520000	15-242	LG 267
41602700	15-243	LG 267
41640000	15-244	LG 267
BEFCO		
000-6641	392-301*	LG 382
000-6641	92-301	LG 382
000-6690	392-302*	LG 382
000-6690	92-302	LG 382
000-6795	392-300*	LG 382
000-6795	92-300	LG 382
000-6845	392-133*	LG 382
000-6845	92-133	LG 382
BELKNAP INC.		
754-0145	75-145	LG 300
754-0151	75-004	LG 301
754-0178	75-179	LG 310
754-0201	75-441	LG 334
754-0234	75-441	LG 334
754-0240	75-009	LG 301
754-0241	75-012	LG 301
754-0266	75-016	LG 301
954-0145	75-145	LG 300
954-0145A	75-145	LG 300
954-0151	75-004	LG 301
954-015A	75-145	LG 300
954-0178	75-179	LG 310
954-0201	75-441	LG 334
954-0234	75-441	LG 334
954-0240	75-009	LG 301
954-0241	75-012	LG 301
954-0241A	75-012	LG 301
954-0266	75-016	LG 301
954-0266A	75-016	LG 301
BENNY'S		
754-0935	75-092	LG 304
954-0935	75-092	LG 304
BIG BEE		
A-19B20	91-046	LG 384
A-19B25	91-047	LG 384
FM04-2A	91-046	LG 384
FM04-3A	91-047	LG 384
BILLY GOAT		
350205	40-707	LG 590
BLACK + DECKER		
82-024	40-121	LG 584
BLUE GRASS		
754-0145	75-145	LG 300
754-0151	75-004	LG 301
754-0178	75-179	LG 310
754-0201	75-441	LG 334
754-0230	75-008	LG 301
754-0234	75-441	LG 334
754-0240	75-009	LG 301
754-0241	75-012	LG 301
754-0266	75-016	LG 301
954-0145	75-145	LG 300
954-0145A	75-145	LG 300
954-0151	75-004	LG 301
954-015A	75-145	LG 300

X

* OREGON® Gator™ replacement blade

OEM No.	OREGON	Page
954-0178	75-179	LG 310
954-0201	75-441	LG 334
954-0230	75-008	LG 301
954-0234	75-441	LG 334
954-0240	75-009	LG 301
954-0241	75-012	LG 301
954-0241A	75-012	LG 301
954-0266	75-016	LG 301
954-0266A	75-016	LG 301
BLUEBIRD		
0522361	89-001	LG 590
108111	41-899	LG 590
343	34-028	LG 821
5002	41-008	LG 590
5201	40-707	LG 590
539005201	40-707	LG 590
7190	89-001	LG 590
BMB		
5224	91-080	LG 490
BOBCAT		
03239	396-716*	LG 451
03239	596-310*	LG 447
03239	93-005	LG 447
03239	93-009	LG 476
03239	96-310*	LG 444
101002	78-650	LG 835
108078	45-104	LG 939
108208	33-028	LG 947
112111-01	593-600*	LG 385
112111-01	93-005	LG 447
112111-01	93-009	LG 476
112111-02	393-601*	LG 582
112111-02	593-601*	LG 386
112111-02	93-006	LG 444
112111-02	93-010	LG 432
112111-02	93-601*	LG 432
112111-03	396-702*	LG 480
112111-03	596-702*	LG 388
112111-03	93-008	LG 510
112111-03	93-011	LG 557
112111-03	96-702*	LG 491
112111-04	93-025	LG 482
112111-07	393-026*	LG 388
112243-03	396-702*	LG 480
112243-03	596-702*	LG 388
112243-03	93-008	LG 510
112243-03	93-013	LG 480
112243-03	96-702*	LG 491
118020-07	60-410	LG 703
1211-02	93-010	LG 432
12111-02	93-006	LG 444
1226028	33-183	LG 735
1226167	33-183	LG 735
126026	48-320	LG 238
126167	33-183	LG 735
126167/128028	33-183	LG 735
128003	75-193	LG 269
128009	33-384	LG 947
128018	78-116	LG 826
128028	33-183	LG 735
128036	33-027	LG 947
128079	45-300	LG 804
128099	75-125	LG 269
128132	33-183	LG 735
128169	78-116	LG 826
138011	45-302	LG 804
138031	33-015	LG 948
148042	45-031	LG 232
148042	45-063	LG 230
16C109	48-211	LG 233
16N238	33-015	LG 948
188018	33-114	LG 734
188019	33-114	LG 734
2186153	82-017	LG 875
2186154	82-019	LG 875
2186205	82-019	LG 875
2186207	82-017	LG 875
2188128	15-247	LG 268
2188134	75-207	LG 256
2188151	33-115	LG 738
2188153	33-082	LG 946
2306005	34-007	LG 826
2306005	78-021	LG 832
2308052	15-248	LG 268
2701410	89-001	LG 590
2702758	82-018	LG 875
2720213	09-803	LG 697
2720459	82-016	LG 875
2720475	72-739	LG 1046
2720475-02	72-739	LG 1046
2720646	72-741	LG 1046
2720758	82-018	LG 875
2720759	82-016	LG 875
2720815	15-249	LG 268
2720948	15-250	LG 268
2721337	33-115	LG 738
2721337	33-136	LG 737
2721477	15-101	LG 269
2721478	15-102	LG 269
2721512	72-161	LG 1038
2721642	15-103	LG 269
2721801	33-028	LG 947
2722016	33-114	LG 734
2722016	33-132	LG 735
2722228	72-739	LG 1046
2722453-03	396-702*	LG 480
2722453-03	596-702*	LG 388
2722453-03	96-702*	LG 491
272254302	393-601*	LG 582
272254302	593-601*	LG 386
272254302	93-601*	LG 432
2722543-03	93-008	LG 510
2722543-03	93-011	LG 557
2722543-03	93-013	LG 480
272543-01	93-009	LG 476
2725543-01	93-005	LG 447
2922	33-386	LG 942
303164	09-802	LG 233
30613A	48-205	LG 694
31004	48-080	
31008B	78-649	LG 841
31011B	78-640	LG 835
31012A	78-649	LG 841
32022	396-726*	LG 391
32022	596-344*	LG 495
32022	93-006	LG 444
32022	96-344*	LG 536
32022A	396-726*	LG 391
32022A	596-344*	LG 495
32022A	93-006	LG 444
32022A	93-010	LG 432
32022A	96-344*	LG 536
32022HD	396-726*	LG 391
32022HD	596-344*	LG 495
32022HD	93-006	LG 444
32022HD	93-010	LG 432
32022HD	96-344*	LG 536
32061	396-716*	LG 451
32061	596-310*	LG 447
32061	93-005	LG 447
32061	93-009	LG 476
32061	96-310*	LG 444
32061A	93-005	LG 447
32061A	93-009	LG 476
3239	396-716*	LG 451
3239	596-310*	LG 447
3239	93-005	LG 447
3239	93-009	LG 476
3239	96-310*	LG 444
33014A	45-078	LG 230
33050	45-078	LG 230
338875	89-001	LG 590
35006N	48-211	LG 233
35008N	45-220	LG 232
35010A	43-075	
35051-01	07-107	LG 774
35051A	07-107	LG 774
35062B	48-211	LG 233
35063N	48-211	LG 233
36006N	82-306	LG 874
36013A	48-205	LG 694
36022N	48-200	LG 694
36082N	82-307-0	LG 874
36129	48-200	LG 694
36306	48-205	LG 694
36306.7	48-205	LG 694
36411.2	48-135	LG 694
36526	48-135	LG 694
36567	82-320	LG 874
380101A	78-021	LG 832
38010-1A	34-007	LG 826
38010-2A	78-031	LG 826
38012N	72-745	LG 1033
38015N	75-072	LG 268
38016	75-240	LG 297
38016N	75-240	LG 297
38017N	75-221	LG 280
38018N	78-641	LG 835
38020	06-003	LG 805
38022B	78-643	LG 835
38030	75-058	LG 255
38030N	75-058	LG 255
38042N	45-014	LG 225
38073N	75-240	LG 297
38074N	75-221	LG 280
38076N	75-072	LG 268
38077N	75-058	LG 255
38111	75-072	LG 268
38136	15-253	LG 267
38183	78-678	LG 835
38184-1	34-028	LG 821
38184-1	78-020	LG 825
38184-2	78-020	LG 825
38204	48-148	LG 695
38212	75-212	LG 268
38214	78-651	LG 835
38264	72-741	LG 1046
38264	72-796	LG 1043
38273	45-121	LG 230
38274	45-121	LG 230
38275	15-254	LG 267
38283	07-107	LG 774
38297	78-111	LG 826
38330	15-255	LG 267
38331	15-256	LG 267
38348-01	45-225	LG 232
38362	15-257	LG 267
38363	15-258	LG 267
38382	33-015	LG 948
38383	33-084	LG 948
38385	15-259	LG 267
38389	75-128	LG 253
38440	75-180	LG 254
38442	75-130	LG 269
38456	78-641	LG 835
38458	75-131	LG 269
38460	78-651	LG 835
38462	15-260	LG 268
38463	75-131	LG 269
38510	72-741	LG 1046
38523	75-095	LG 268
38528	15-261	LG 268
38528DF	75-133	LG 269
38665	33-334	LG 730
38665	33-335	LG 730
38665	33-336	LG 730
38666	07-107	LG 774
3970242	72-161	LG 1038
4118008	33-028	LG 947
4127338	33-015	LG 948
4129570	33-028	LG 947
4143636	15-104	LG 269
4163569	15-105	LG 269
42139B	396-731*	LG 427
42139B	93-025	LG 482
42180B	396-727*	LG 467
42180B	596-347*	LG 448
42180B	93-008	LG 510
42180B	93-011	LG 557
42180B	93-013	LG 480
42180B	96-347*	LG 387
43180	45-188	LG 230
48015N	07-315	LG 772
48019	15-262	LG 268
48032B	33-386	LG 942
48035A	33-330	LG 729
48053-2A	48-320	LG 238
48094A	45-243	LG 243
48094A	45-257	LG 245
48238A	15-264	LG 268
48250	45-015	LG 233
48280A	15-265	LG 268
48376	15-266	LG 268
48426	30-026	LG 208
48587	07-315	LG 772
503314	09-804	LG 233
522361	89-001	LG 590
64123-147	72-746	LG 1032
64163-07	09-808	LG 697
64163-12	09-802	LG 233
64163-14	09-801	LG 229
64163-22	09-803	LG 697
64163-22A	09-804	LG 233
64163-71	09-801	LG 229
71002B	80-122	LG 340
72039B	93-008	LG 510
72039B	93-011	LG 557
72039B	93-013	LG 480
73028-1	72-746	LG 1032
76009N	72-746	LG 1032
76010	72-747	LG 1036
76080-1C	72-746	LG 1032
76080-2C	72-747	LG 1036
76081-2C	72-747	LG 1036
76096-1C	72-746	LG 1032
76096-2C	72-747	LG 1036
76104C	72-746	LG 1032
76167	72-746	LG 1032
76168	72-747	LG 1036
78001A	72-746	LG 1032
78005N	72-747	LG 1036
78030N	15-267	LG 268
78031N	15-268	LG 268
A203603	45-257	LG 245
A203705	45-220	LG 232
A209300	48-211	LG 233
A491014	75-072	LG 268
BAA0028	48-211	LG 233
BAA0031	43-075	
BAA0042	82-306	LG 874
BAA0047	48-205	LG 694
BAA0053	48-200	LG 694
BAA0070	75-221	LG 280
BAA0071	78-641	LG 835
BAA0073	78-643	LG 835
BAA0105	78-640	LG 835
BAA0203	45-078	LG 230

X

* OREGON® Gator™ replacement blade

2019 OEM X-Reference

OEM No.	OREGON	Page
BOBCAT		
BAA0230	07-107	LG 774
BAA0231	07-107	LG 774
BAA0336	45-014	LG 225
BAA0393	33-386	LG 942
BAA1362	45-014	LG 225
BAA1363	45-015	LG 233
BAE6129	48-200	LG 694
BAF8587	07-315	LG 772
BAM8078	45-104	LG 939
BAP8036	33-027	LG 947
BAQ8011	45-302	LG 804
BAQ8031	33-015	LG 948
BAR8042	45-031	LG 232
H980381	45-104	LG 939
PL0457	48-200	LG 694
PL0617	09-802	LG 233
PL4275	75-720	LG 270
PL4517	33-027	LG 947
PL4518	33-015	LG 948
W036082	82-307-0	LG 874
W036306	48-205	LG 694
W036411	48-135	LG 694
W038183	78-678	LG 835
W038264	72-741	LG 1046
W038283	07-107	LG 774
W048587	07-315	LG 772
W108208	33-028	LG 947
W128009	33-384	LG 947
W128036	33-027	LG 947
W148042	45-031	LG 232
W38274	45-121	LG 230
W38278	45-121	LG 230
WM132022	396-726*	LG 391
WM132022	596-344*	LG 495
WM132022	93-006	LG 444
WM132022	93-010	LG 432
WM132022	96-344*	LG 536
WM132061	396-716*	LG 451
WM132061	596-310*	LG 447
WM132061	93-005	LG 447
WM132061	96-310*	LG 444
WM142139B	396-731*	LG 427
WM142180B	396-727*	LG 467
WM142180B	596-347*	LG 448
WM142180B	93-008	LG 510
WM142180B	93-011	LG 557
WM142180B	93-013	LG 480
WM142180B	96-347*	LG 387
WMTA3206	396-716*	LG 451
WMTA3206	596-310*	LG 447
WMTA3206	93-005	LG 447
WMTA3206	96-310*	LG 444
WMTA32061	396-716*	LG 451
WMTA32061	596-310*	LG 447
WMTA32061	93-005	LG 447
WMTA32061	96-310*	LG 444
WMTH32061	93-005	LG 447
BOLENS (ALSO SEE MTD)		
110-8460	75-727	LG 319
110-8463	75-101	LG 269
110-8478	75-090	LG 301
118-5275	45-205	LG 228
118-5276	45-206	LG 231
118-5828	45-295	LG 232
170-3896	07-400	LG 767
171-0566	34-005	LG 821
171-0567	34-030	LG 821
1710811	75-120	LG 300
171-0873	34-027	LG 821
171-3802	34-028	LG 821
171-3803	34-009	LG 821
171-4742	34-015	LG 821
171-4742	78-114	LG 829
171-5340	34-006	LG 821
171-6584	34-029	LG 821
171-7584	34-029	LG 821
171-8029	07-400	LG 767
171-9859	83-300	LG 819
172-0567	34-030	LG 821
172-0727	75-367	LG 306
1720859	76-067-0	LG 726
172-2883	91-093	LG 389
172-4488	34-015	LG 821
172-4488	78-114	LG 829
172491	07-102	LG 774
172-5522	91-093	LG 389
172-6450	83-300	LG 819
172-6660	34-030	LG 821
1727491	07-102	LG 774
172-7926	91-097	LG 388
172-7978	34-031	LG 821
172-8255	45-259	LG 224
172-9440	34-002	LG 821
173-0412	91-096	LG 389
173-0634	91-586	LG 485
173-5583	72-306	LG 1038
1737899	75-066	LG 251
173-7899	75-066	LG 251
173-8433	07-392	LG 767
173-8571	91-096	LG 389
174-4090	34-003	LG 821
174-8302	91-714	LG 543
175-1569	33-330	LG 729
175-1736	34-023	LG 822
175-2137	33-334	LG 730
175-3539	33-334	LG 730
175-4637	34-003	LG 821
175-8846	72-306	LG 1038
177-2144	91-097	LG 388
177-2145	91-096	LG 389
181036	72-306	LG 1038
189-4272	75-635	LG 314
742-04043	598-640*	LG 405
742-04043	98-640*	LG 574
742-04049	98-637*	LG 512
742-04124-X	98-637*	LG 512
742-04125-X	598-640*	LG 405
742-04125-X	98-640*	LG 574
742-0610	198-058	LG 517
742-0610	598-628*	LG 517
742-0610	98-628*	LG 389
742-0610A	198-058	LG 517
742-0610A	598-628*	LG 517
742-0610A	98-628*	LG 389
742-0610A-0637	198-058	LG 517
742-0610A-0637	598-628*	LG 517
742-0610A-0637	98-628*	LG 389
742-0611	198-063	LG 513
742-0611	598-640*	LG 405
742-0611	98-640*	LG 574
742-0611A	198-063	LG 513
742-0611A	598-640*	LG 405
742-0611A	98-640*	LG 574
742-0611-X	598-640*	LG 405
742-0611-X	98-640*	LG 574
742-0612	98-061	LG 404
742-0612	98-637*	LG 512
742-0612A	98-061	LG 404
742-0612A	98-637*	LG 512
742-0612-X	98-637*	LG 512
742-0616	198-059	LG 403
742-0616	598-629*	LG 575
742-0616	98-629*	LG 412
742-0616A	198-059	LG 403
742-0616A	598-629*	LG 575
742-0616A	98-629*	LG 412
742-0640	98-068	LG 389
742-0654	198-052	LG 389
742-0654	598-628*	LG 517
742-0654	98-628*	LG 389
742-0740	98-066	LG 409
742-0741	198-049	LG 518
742-0741	598-631*	LG 390
742-0741	98-631*	LG 390
754-0468	75-993	LG 303
942-04124-X	98-637*	LG 512
942-04125-X	598-640*	LG 405
942-04125-X	98-640*	LG 574
942-0610	198-058	LG 517
942-0610	598-628*	LG 517
942-0610	98-628*	LG 389
942-0610A	198-058	LG 517
942-0610A	598-628*	LG 517
942-0610A	98-628*	LG 389
942-0611	198-063	LG 513
942-0611	598-640*	LG 405
942-0611	98-640*	LG 574
942-0611A	198-063	LG 513
942-0611A	598-640*	LG 405
942-0611A	98-640*	LG 574
942-0612	98-061	LG 404
942-0612	98-637*	LG 512
942-0612A	98-061	LG 404
942-0612A	98-637*	LG 512
942-0612-X	98-637*	LG 512
942-0616	198-059	LG 403
942-0616	598-629*	LG 575
942-0616	98-629*	LG 412
942-0616A	198-059	LG 403
942-0616A	598-629*	LG 575
942-0616A	98-629*	LG 412
942-0640	98-068	LG 389
942-0654	198-052	LG 389
942-0654	598-628*	LG 517
942-0654	98-628*	LG 389
942-0740	98-066	LG 409
942-0741	198-049	LG 518
942-0741	598-631*	LG 390
942-0741	98-631*	LG 390
942-0741A	198-049	LG 518
942-0741A	598-631*	LG 390
942-0741A	98-631*	LG 390
951-3013	07-102	LG 774
954-0468	75-993	LG 303
GW-7420610	198-058	LG 517
GW-7420610	598-628*	LG 517
GW-7420610	98-628*	LG 389
OEM-742-0610	198-058	LG 517
OEM-742-0610	598-628*	LG 517
OEM-742-0610	98-628*	LG 389
OEM-742-0616	198-059	LG 403
OEM-742-0616	598-629*	LG 575
OEM-742-0616	98-629*	LG 412
BOSCH		
0332 209-150	33-319-0	LG 729
601053	33-317-0	LG 729
FR8DC	77-303-1	LG 865
HS5E	77-316-1	LG 865
HS8E	77-304-1	LG 865
HS8E	77-318-1	LG 865
W2C	77-323-1	LG 865
W6D	77-315-1	LG 865
W7AC	77-305-1	LG 865
W8A	77-321-1	LG 865
W8DC	77-310-1	LG 865
W8E	77-317-1	LG 865
W9ECO	77-313-1	LG 865
W9EO	77-301-1	LG 864
WR8DS	77-314-1	LG 865
WS5F	77-311-1	LG 865
WS7E	77-308-1	LG 865
WS7F	77-309-1	LG 865
WS8E	77-302-1	LG 864
WS8F	77-300-1	LG 864
WSR5F	77-307-1	LG 865
WSR9E	77-324-1	LG 865
BRIGGS & STRATTON		
100067	42-005	LG 744
100068	42-005	LG 744
189482GS	30-101	LG 179
19374	42-452	LG 867
199948	43-011	LG 935
220197	33-201	LG 867
220790	02-107	LG 723
220796	02-107	LG 723
221377	53-001	LG 623
221995	49-209	LG 625
222698	02-407	LG 790
222698S	02-407	LG 790
22372	02-115	LG 723
230318	02-861	LG 766
231855	49-210	LG 628
231855S	49-210	LG 628
24518	30-920	LG 186
24519	30-044	LG 179
260584	49-083	LG 913
262594	43-403	LG 936
270026	49-001	LG 622
270026	49-004	LG 622
270067	30-913	LG 185
270093	30-916	LG 185
270239	49-100	LG 749
270251	30-908	LG 185
270253	49-003	LG 622
27034	49-160	LG 747
270341	50-027	LG 747
270341	50-448	LG 748
270344	02-644-0	LG 748
270344S	02-644-0	LG 748
270345	49-111	LG 748
270345S	49-111	LG 748
270383	50-542	LG 747
270430	50-541	LG 747
270447	30-910	LG 186
270511	49-127	LG 746
270528	30-909	LG 186
270528S	30-909	LG 186
270579	30-907	LG 186
270579S	30-907	LG 186
270781	30-920	LG 186
270782	30-920	LG 186
270824	49-119	LG 746
270833	50-101	LG 746
270843	30-911	
270848	30-903	LG 186
270872	49-119	LG 746
270917	49-031	LG 746
270979	30-923	LG 186
270983	50-546	LG 748
270984	50-545	LG 748
270988	49-213	LG 623
271075	50-025-0	LG 747
271138S	49-131	LG 745
271139	49-131	LG 745
271139S	49-131	LG 745
271271	30-929	LG 187
271271S	30-929	LG 187
271466	30-923	LG 186
271592	49-099	LG 748
271794	30-920	LG 186
2717940S	30-920	LG 186
271794S	30-920	LG 186
271840	49-129	LG 745
271866	50-025-0	LG 747
271866S	50-025-0	LG 747
271867	50-545	LG 748

X

* OREGON® Gator™ replacement blade

BRIGGS & STRATTON

OEM No.	OREGON	Page
271867S	50-545	LG 748
271868	50-546	LG 748
271868S	50-546	LG 748
271904	49-132	LG 749
271916	49-115	LG 746
271928	49-067	LG 748
271933	30-927	LG 187
271936	49-095	LG 746
271939	30-447	LG 186
271962	30-924	LG 186
271962S	30-924	LG 186
271996	49-110	LG 746
272157	50-542	LG 747
272157S	50-542	LG 747
272163	50-541	LG 747
272163S	50-541	LG 747
272167	50-544	LG 747
272170	50-027	LG 747
272170	50-448	LG 748
272198	49-114	LG 746
27220	50-543	LG 748
272200	50-543	LG 748
272200S	50-543	LG 748
272218	30-184	LG 186
272235	30-917	LG 186
272235S	30-917	LG 186
272257	49-129	LG 745
272293	49-031	LG 746
272296	49-129	LG 745
272403	30-925	LG 187
272403S	30-925	LG 187
272405	30-960	LG 187
272409	49-099	LG 748
272409S	49-099	LG 748
272410	49-067	LG 748
272444	30-444	LG 187
272475	49-161	LG 747
272475S	49-161	LG 747
272477	30-926	LG 187
272477S	30-926	LG 187
272481	49-132	LG 749
272481S	49-132	LG 749
272489	49-109	LG 748
272490	30-929	LG 187
272490S	30-929	LG 187
272533	30-930	LG 187
272536	50-027	LG 747
272536	50-448	LG 748
272536S	50-027	LG 747
272536S	50-448	LG 748
272538	49-001	LG 622
272538	49-004	LG 622
272538S	49-001	LG 622
272538S	49-004	LG 622
272554	49-119	LG 746
272554S	49-119	LG 746
272585	49-095	LG 746
272602	49-100	LG 749
272602S	49-100	LG 749
272614	50-435	LG 747
272637	49-001	LG 622
272637	49-004	LG 622
272638	49-213	LG 623
272638S	49-213	LG 623
272653	49-069	LG 746
272653S	49-069	LG 746
272694	50-445	LG 748
272694	50-448	LG 748
272916	50-441	LG 748
272922	30-960	LG 187
272996	49-067	LG 748
273113	49-095	LG 746
273113S	49-095	LG 746
273185	30-930	LG 187
273185S	30-930	LG 187
273280	50-435	LG 747
273280S	50-435	LG 747
273356	30-915	LG 187
273356S	30-915	LG 187
273364	50-438	LG 747
27355	49-355	LG 746
27355S	49-355	LG 746
273638	30-914	LG 187
273638S	30-914	LG 187
27549	49-107	LG 749
27549S	49-107	LG 749
27670	50-544	LG 747
276890	30-145	LG 184
27803	49-112	LG 749
27803S	49-112	LG 749
27911	49-099	LG 748
27918	49-123	LG 746
27987	30-906	LG 185
27987S	30-906	LG 185
280036	31-908	LG 929
280104	43-012	LG 927
280104S	43-012	LG 927
280117	43-100	LG 932
280121	31-908	LG 929
280136	31-908	LG 929
280439	43-100	LG 932
280439S	43-100	LG 932
280469	43-100	LG 932
281165	49-246	LG 627
281165S	49-246	LG 627
281165S	49-315	LG 627
281370	49-413	LG 749
281370S	49-413	LG 749
281503	31-057	LG 930
281503	31-064	LG 931
281504	31-063	LG 932
281505	31-057	LG 930
281505S	31-057	LG 930
281658	49-667	LG 750
281658S	49-667	LG 750
291071	49-989	LG 602
291675	49-047	LG 749
291675S	49-047	LG 749
292293	49-031	LG 746
293578	43-404	LG 928
293739	33-201	LG 867
294201	36-101	LG 750
294232	36-001	
294303	43-400-0	LG 936
294367	36-101	LG 750
294599	35-005	LG 806
294599S	35-005	LG 806
294628	33-182-0	LG 789
294698	49-102	LG 602
295871	43-200	LG 932
295924	33-320-0	LG 731
295984	07-001	LG 765
296188	30-081	LG 205
297274	35-004	LG 806
297506	35-004	LG 806
297506	35-023	LG 806
297615	50-410	LG 745
297616	50-411	LG 745
298090	07-101	LG 775
298090S	07-101	LG 775
298185	33-601	LG 789
298310	43-404	LG 928
298316	33-340	LG 784
298425	07-303	LG 770
298502	33-362	LG 784
298514	49-362	LG 624
298798	43-404	LG 928
298830	35-002	LG 806
298830	35-023	LG 806
298968	33-365	LG 784
298989	50-408	LG 745
299060	49-077	LG 628
299061	33-182-0	LG 789
299096	49-033	LG 628
299366	33-365	LG 784
299429	36-100	LG 750
299430	36-100	LG 750
299477	35-006	LG 808
299477	35-026	LG 807
299477S	35-006	LG 808
299477S	35-026	LG 807
299577	50-409	LG 745
299629	35-016	LG 809
299636	49-006	LG 622
299637	49-005	LG 622
299707	49-214	LG 624
299819	49-040-0	LG 749
299819S	49-040-0	LG 749
299852	49-102	LG 602
299948	43-011	LG 935
340018	30-101	LG 179
369865	33-005	LG 927
390249	35-012	LG 806
390401	36-103	LG 750
390402	36-103	LG 750
390420	30-104	LG 180
390492	30-097	LG 179
390930	30-044	LG 179
390930	30-825	LG 179
391071	49-071	LG 602
391086	49-045	LG 749
391086S	49-045	LG 749
391178	33-719	LG 915
391313	35-014	LG 806
391435	35-002	LG 806
391435	35-023	LG 806
391483	49-041-0	LG 749
391483S	49-041-0	LG 749
391512	49-054	LG 632
391569	35-026	LG 807
391569S	35-026	LG 807
391643	49-006	LG 622
391681	49-006	LG 622
391775	36-104	LG 750
391780	36-005	LG 750
391816	36-104	LG 750
392134	31-056	LG 927
392286	30-022	LG 179
392308	30-132	LG 179
392308S	30-132	LG 179
392329	33-345	LG 784
392331	36-022	LG 750
392642	30-101	LG 179
392642	30-809	LG 179
392939	36-102	LG 750
392989	35-006	LG 808
392989	35-026	LG 807
393010	35-012	LG 806
393010S	35-012	LG 806
393152	31-908	LG 929
393169	07-001	LG 765
393232	35-006	LG 808
393232	35-010	LG 809
393232	35-026	LG 807
393232S	35-006	LG 808
393232S	35-026	LG 807
393254	33-003	LG 926
393254	33-005	LG 927
393374	33-402	LG 731
393397	49-008	LG 623
393406	30-106	LG 179
393411	49-412	LG 745
393456	33-414	LG 741
393615	35-004	LG 806
393725	30-105	LG 179
393814	33-415	LG 741
393862	49-040-0	LG 749
393957	30-044	LG 179
393957	30-825	LG 179
393957S	30-044	LG 179
393957S	30-825	LG 179
394018	30-101	LG 179
394018	30-809	LG 179
394018S	30-101	LG 179
394018S	30-809	LG 179
394019	30-104	LG 180
394019	30-811	LG 180
394019S	30-104	LG 180
394019S	30-811	LG 180
394157	49-001	LG 622
394157	49-004	LG 622
394170	35-022	LG 807
394180	35-022	LG 807
394209	49-123	LG 746
394358	07-100	LG 774
394358S	07-100	LG 774
394502	49-070	LG 604
394558	43-404	LG 928
394569	35-002	LG 806
394569	35-023	LG 806
394569S	35-002	LG 806
394569S	35-023	LG 806
394665	36-005	LG 750
394681	49-033	LG 628
394682	49-038	LG 628
394683	49-360	LG 628
394693	49-693	LG 602
394698	49-102	LG 602
394805	30-162	LG 222
394805	33-700	LG 915
394805	33-708	LG 915
394805	33-770	LG 915
394805	33-778	LG 915
394808	33-709	LG 916
394808	33-771	LG 916
394890	33-402	LG 731
394891	33-345	LG 784
394895	33-345	LG 784
394988	33-345	LG 784
394989	49-989	LG 602
395007	50-027	LG 747
395007	50-448	LG 748
395008	50-542	LG 747
395019	35-023	LG 806
395021	49-007	LG 622
395021	49-037	LG 622
395051	07-016	LG 762
395326	33-344	LG 784
395488	33-342	LG 784
395488	33-362	LG 784
395490	33-340	LG 784
395491	33-340	LG 784
395492	33-344	LG 784
395537	33-762-0	LG 926
395538	33-759-0	LG 926
395820	43-011	LG 935
396244	07-408	LG 766
396306	33-719	LG 915
396424	30-094	LG 180
396424S	30-094	LG 180
396865	33-005	LG 927
397145	50-410	LG 745
397358	33-340	LG 784
397795	30-700	LG 180
397795	30-813	LG 180
397795S	30-700	LG 180
397795S	30-813	LG 180
397809	33-247	LG 731
39795S	30-700	LG 180

X

2019 OEM X-Reference

BRIGGS & STRATTON

OEM No.	OREGON	Page
397974	07-304	LG 770
397975	07-308	LG 772
398003	33-007	LG 926
398101	31-907	LG 929
398158	49-145	LG 603
398183	49-304	LG 603
398188	49-036	LG 628
398235	49-991	LG 602
398265	33-344	LG 784
398593	33-342	LG 784
398669	49-145	LG 603
398811	33-344	LG 784
398825	30-104	LG 180
398825	30-811	LG 180
398992	49-216	LG 602
399039	30-038	LG 187
399517	07-408	LG 766
399671	43-404	LG 928
399676	31-056	LG 927
399781	49-204	LG 749
399781S	49-204	LG 749
399806	30-107	LG 180
399806	30-827	LG 180
399806S	30-107	LG 180
399806S	30-827	LG 180
399877	30-720	LG 180
399877S	30-720	LG 180
399928	33-709	LG 916
399928	33-779	LG 916
399959	30-710	LG 181
399959	30-800	LG 181
399959	69-036	LG 181
399968	30-108	LG 180
4101	30-800	LG 181
4102	30-813	LG 180
4104	30-907	LG 186
4105	07-101	LG 775
4106	30-044	LG 179
4106	30-825	LG 179
4107	30-917	LG 186
4108	30-906	LG 185
4109	30-923	LG 186
4110	30-924	LG 186
4111	30-929	LG 187
4112	07-100	LG 774
4114	43-012	LG 927
4117	49-045	LG 749
4118	49-041-0	LG 749
4119	31-908	LG 929
4124	33-210	LG 867
4128	49-058	LG 768
4129	07-107	LG 774
4129	07-112	LG 774
4130	31-900-0	LG 929
4130	31-909	LG 928
4133	30-909	LG 186
4135	30-101	LG 179
4135	30-809	LG 179
4136	30-101	LG 179
4136	30-104	LG 180
4136	30-811	LG 180
4137	30-094	LG 180
4138	30-107	LG 180
4138	30-827	LG 180
4139	30-803	LG 181
4140	30-736	LG 185
4141	30-920	LG 186
4142	30-925	LG 187
4145	30-826	LG 181
4146	30-927	LG 187
4147	30-961	LG 187
4148	30-928	
4153	83-283	LG 818
4153	83-503	LG 818
4155	43-012	LG 927
4156	49-069	LG 746
4157	49-001	LG 622
4157	49-004	LG 622
4166	30-048	LG 182
4166	30-820	LG 182
4168	49-001	LG 622
4168	49-004	LG 622
4170	43-100	LG 932
4178	49-058	LG 768
4180	49-079	LG 768
4194	43-012	LG 927
4197	30-029	LG 181
4197	30-821	LG 181
4199	30-926	LG 187
4201	30-915	LG 187
4202	49-246	LG 627
4204	31-057	LG 930
4206	83-401	LG 817
4207	30-033	LG 183
4209	30-032	LG 182
4209	30-136	LG 182
4211	30-074	LG 183
4211	30-829	LG 183
4212	30-077	LG 188
4213	30-073	LG 183
4214	30-074	LG 183
4214	30-829	LG 183
4215	30-076	LG 188
4223	30-032	LG 182
4224	30-039	LG 182
4232	30-087	LG 182
4233	30-145	LG 184
4234	30-075	LG 185
490017	49-054	LG 632
490075	07-307	LG 770
490179	43-400-0	LG 936
490348	36-104	LG 750
490420	33-700	LG 915
490420	33-708	LG 915
490420	33-770	LG 915
490420	33-778	LG 915
490421	33-005	LG 927
490467	33-003	LG 926
490467	33-005	LG 927
490522	49-095	LG 746
490525	50-412	LG 745
490547	35-027	LG 807
490566	36-102	LG 750
490586	33-347	LG 784
490652	31-900-0	LG 929
490652	31-909	LG 928
490920	33-708	LG 915
490920	33-778	LG 915
490931	49-145	LG 603
490937	49-304	LG 603
491006	49-054	LG 632
491021	30-134	LG 180
491056	83-283	LG 818
491056	83-403	LG 818
491056S	83-283	LG 818
491288	31-908	LG 929
491312	33-347	LG 784
491384	30-731	LG 180
491413	35-022	LG 807
491435	30-927	LG 187
4914355S	30-927	LG 187
491435S	30-927	LG 187
491519	30-107	LG 180
491519	30-827	LG 180
491537S	30-961	LG 187
491539	49-070	LG 604
491546	33-417	LG 731
491588	30-710	LG 181
491588	30-800	LG 181
491588	69-036	LG 181
491588S	30-710	LG 181
491588S	30-800	LG 181
491588S	69-036	LG 181
491760	33-341	LG 784
491760	33-353	LG 785
491823	30-928	
491889	43-403	LG 936
491922	07-700	LG 767
492072	49-145	LG 603
492141	43-014	LG 932
492333	31-057	LG 930
492341	33-347	LG 784
492386	07-107	LG 774
492416	33-341	LG 784
492416	33-353	LG 785
492495	49-304	LG 603
492495	49-305	LG 603
492832	43-014	LG 932
492836	07-107	LG 774
492836	07-112	LG 774
492889	30-928	
492932	69-281	LG 814
492932	83-013	LG 817
492932	83-401	LG 817
492932S	83-013	LG 817
492932S	83-401	LG 817
493206	30-184	LG 186
493219	33-418	LG 731
493237	33-341	LG 784
493295	31-061	LG 922
493327	33-353	LG 785
493537	30-961	LG 187
493537S	30-961	LG 187
493625	33-399	LG 944
493629	07-107	LG 774
493629	07-112	LG 774
493640	49-235	LG 625
493762	49-304	LG 603
493762	49-305	LG 603
493824	31-041	LG 932
493824	43-014	LG 932
493909	30-049	LG 181
493909	30-803	LG 181
493910	30-048	LG 182
493910	30-820	LG 182
493936	35-004	LG 806
493960	07-406	LG 767
493982	07-303	LG 770
494241	50-412	LG 745
494245	30-710	LG 181
494245	30-800	LG 181
494245	69-036	LG 181
494349	49-145	LG 603
494384	49-147	LG 603
494385	50-437	LG 745
494408	49-058	LG 768
494511	30-735	LG 181
494511	30-826	LG 181
494511S	30-735	LG 181
494511S	30-826	LG 181
494539	07-125	LG 766
494559	07-307	LG 770
494585	35-004	LG 806
494586	30-029	LG 181
494586	30-821	LG 181
494624	49-078	LG 603
494768	07-406	LG 767
494769	07-125	LG 766
494782	31-062	LG 922
494788	49-218	LG 628
494880	49-147	LG 603
494990	33-700	LG 915
494990	33-708	LG 915
494990	33-770	LG 915
494990	33-778	LG 915
495100	33-709	LG 916
495100	33-779	LG 916
495246	30-928	
495603	50-410	LG 745
495606	49-078	LG 603
495766	31-062	LG 922
495770	49-007	LG 622
495770	49-037	LG 622
495799	49-147	LG 603
495859	33-347	LG 784
495877	33-003	LG 926
495877	33-005	LG 927
495878	33-005	LG 927
495933	49-219	LG 625
495970	43-404	LG 928
496077	30-028	LG 182
496106	35-027	LG 807
496106S	35-027	LG 807
496115	49-079	LG 768
496416	49-006	LG 622
496418	49-005	LG 622
496622	49-146	LG 603
496650	31-062	LG 922
496659	50-411	LG 745
496881	33-029-1	LG 927
496894	30-049	LG 181
496894	30-803	LG 181
496894S	30-049	LG 181
496894S	30-803	LG 181
496914	33-342	LG 784
496984S	30-049	LG 181
497041	49-148	LG 603
497401	33-708	LG 915
497401	33-778	LG 915
497481	49-146	LG 603
497525	33-700	LG 915
497525	33-708	LG 915
497525	33-770	LG 915
497525	33-778	LG 915
497535	49-147	LG 603
497578	49-148	LG 603
497586	50-657	LG 596
497595	33-700	LG 915
497595	33-708	LG 915
497595	33-770	LG 915
497595	33-778	LG 915
497596	33-709	LG 916
497596	33-771	LG 916
497598	31-061	LG 922
497606	33-006	LG 927
497608	33-760-0	LG 926
497680	31-068	LG 922
497725	30-029	LG 181
497725	30-821	LG 181
497725S	30-029	LG 181
497725S	30-821	LG 181
497830	31-062	LG 922
497856	50-657	LG 596
498116	49-220	LG 603
498144	31-063	LG 932
498148	33-709	LG 916
498148	33-771	LG 916
498148	33-779	LG 916
498170	50-657	LG 596
498260	49-304	LG 603
498260	49-305	LG 603
498261	49-304	LG 603
498261	49-305	LG 603
498595	33-709	LG 916
498595	33-771	LG 916
498596	30-022	LG 179
498596	30-033	LG 183
498596	30-824	LG 183
498596S	30-033	LG 183

X

* OREGON® Gator™ replacement blade

BRIGGS & STRATTON

OEM No.	OREGON	Page
498680	36-028	LG 750
499059	50-658	LG 596
499220	49-221	LG 604
499425	36-027	LG 750
499447	33-352-0	LG 784
499486	30-032	LG 182
499486	30-136	LG 182
499486	30-823	LG 182
499486S	30-032	LG 182
499486S	30-136	LG 182
499486S	30-823	LG 182
499521	33-700	LG 915
499521	33-708	LG 915
499521	33-770	LG 915
499521	33-778	LG 915
499685	49-223	LG 604
499706	31-918	LG 922
499897	31-041	LG 932
499901	31-041	LG 932
499996	36-005	LG 750
5001H	30-906	LG 185
5010	43-400-0	LG 936
5010B	43-400-0	LG 936
5010C	43-400-0	LG 936
5010D	43-400-0	LG 936
5010FC	43-400-0	LG 936
5010H	43-400-0	LG 936
5010K	43-400-0	LG 936
5011	35-005	LG 806
5019	35-023	LG 806
5019A	35-023	LG 806
5019B	35-023	LG 806
5019C	35-023	LG 806
5019D	35-023	LG 806
5019H	35-023	LG 806
5019K	35-023	LG 806
5021	49-007	LG 622
5021	49-037	LG 622
5021A	49-007	LG 622
5021A	49-037	LG 622
5021B	49-007	LG 622
5021B	49-037	LG 622
5021C	49-007	LG 622
5021C	49-037	LG 622
5021D	49-001	LG 622
5021D	49-004	LG 622
5021D	49-037	LG 622
5021FC	49-007	LG 622
5021FC	49-037	LG 622
5021H	49-037	LG 622
5043	30-710	LG 181
5043	30-800	LG 181
5043	69-036	LG 181
5043D	69-036	LG 181
5043H	69-036	LG 181
5047	30-917	LG 186
5047H	30-917	LG 186
5047K	30-917	LG 186
5050B	30-101	LG 179
5050K	30-101	LG 179
5052H	30-929	LG 187
5052K	30-929	LG 187
5053D	30-049	LG 181
5053H	30-049	LG 181
5063B	30-032	LG 182
5063D	30-032	LG 182
5063H	30-032	LG 182
5063K	30-032	LG 182
5064	30-961	LG 187
5064H	30-961	LG 187
5064K	30-961	LG 187
5069H	30-032	LG 182
5069K	30-032	LG 182
5074	30-962	LG 188
5075H	30-048	LG 182
5075K	30-048	LG 182
5076D	83-280	LG 815
5077H	30-074	LG 183
5077H	30-076	LG 188
5077K	30-074	LG 183
5077K	30-076	LG 188
5083H	49-007	LG 622
5083H	49-037	LG 622
5083K	49-007	LG 622
5083K	49-037	LG 622
5084D	49-058	LG 768
5084H	49-058	LG 768
5084K	49-058	LG 768
5085H	49-079	LG 768
5085K	49-079	LG 768
5086	43-012	LG 927
5086D	43-012	LG 927
5086H	43-012	LG 927
5086K	30-919	LG 188
5086K	43-012	LG 927
5088	30-919	LG 188
5088H	30-919	LG 188
5099	30-919	LG 188
5404H	30-123	LG 183
5404K	30-123	LG 183
5405H	30-145	LG 184
5405K	30-145	LG 184
5406	33-700	LG 915
5406	33-708	LG 915
5406	33-770	LG 915
5406	33-778	LG 915
5406D	33-700	LG 915
5406D	33-708	LG 915
5406D	33-770	LG 915
5406D	33-778	LG 915
5406H	33-700	LG 915
5406H	33-708	LG 915
5406H	33-770	LG 915
5406H	33-778	LG 915
5406K	33-700	LG 915
5406K	33-708	LG 915
5406K	33-770	LG 915
5406K	33-778	LG 915
5407	33-709	LG 916
5407	33-771	LG 916
5407D	33-709	LG 916
5407D	33-771	LG 916
5407H	33-709	LG 916
5407H	33-771	LG 916
5407K	33-709	LG 916
5407K	33-771	LG 916
5410H	33-334	LG 730
5410K	33-334	LG 730
590454	33-341	LG 784
590777	50-408	LG 745
590781	33-345	LG 784
591301	31-919	LG 922
591334	30-851	LG 184
591420	33-342	LG 784
591459	33-347	LG 784
592846	33-352-0	LG 784
593260	30-168	LG 185
593934	33-772	LG 916
594201	30-851	LG 184
6002	07-101	LG 775
613022	30-073	LG 183
61760	02-402	LG 790
66728	31-900-0	LG 929
66728	31-909	LG 928
66768	49-667	LG 750
671231	30-139	LG 183
67218	02-860	LG 766
672772	30-139	LG 183
68477	49-128	LG 747
68838	49-413	LG 749
690032	49-225	LG 604
690106	30-033	LG 183
690191	49-222	LG 604
690192	50-437	LG 745
690248	33-347	LG 784
690610	30-033	LG 183
690610	30-824	LG 183
690612	07-001	LG 765
690766	53-001	LG 623
691016	30-914	LG 187
691035	07-107	LG 774
691035	07-112	LG 774
691060	33-352-0	LG 784
691185	33-402	LG 731
691188	33-417	LG 731
691262	33-700	LG 915
691262	33-708	LG 915
691262	33-770	LG 915
691262	33-778	LG 915
691564	33-740	LG 916
691609	02-860	LG 766
691642	30-049	LG 181
691642	30-803	LG 181
691643	30-028	LG 182
691667	30-048	LG 182
691667	30-820	LG 182
691764	02-861	LG 766
691874	35-022	LG 807
691894	50-438	LG 747
692024	33-007	LG 926
692038	35-027	LG 807
692046	07-304	LG 770
692141	80-037	LG 727
692179	02-115	LG 723
692190	49-128	LG 747
692191	80-037	LG 727
692207	49-083	LG 913
692218	50-101	LG 746
692226	49-115	LG 746
692232	49-114	LG 746
692236	49-031	LG 746
692241	49-109	LG 748
692249	50-441	LG 748
692252	30-915	LG 187
692265	49-362	LG 624
692288	50-027	LG 747
692288	50-445	LG 748
692288	50-448	LG 748
692299	31-057	LG 930
692299	31-064	LG 931
692304	35-014	LG 806
692313	07-700	LG 767
692318	33-399	LG 944
692405	49-110	LG 746
692446	30-039	LG 182
692513	83-285	LG 814
692519	30-087	LG 182
692520	30-974	LG 188
692605	33-341	LG 784
692667	50-446	
692703	49-223	LG 604
693054	33-700	LG 915
693054	33-708	LG 915
693054	33-770	LG 915
693054	33-778	LG 915
693058	43-012	LG 927
693059	43-012	LG 927
693083	30-074	LG 183
693083	30-829	LG 183
693469	33-740	LG 916
693502	49-224	LG 623
693503	49-149	LG 604
693508	43-012	LG 927
693551	33-772	LG 916
693900	31-065	LG 922
694056	49-070	LG 604
694394	49-058	LG 768
694395	49-079	LG 768
695157	49-225	LG 604
695302	30-135	LG 182
695396	83-280	LG 815
695540	07-253	LG 761
695541	07-251	LG 761
695542	07-255	LG 761
695666	07-064	LG 775
695667	30-032	LG 182
695667	30-136	LG 182
695708	43-012	LG 927
695711	33-353	LG 785
695740	31-907	LG 929
695854	83-280	LG 815
695890	49-100	LG 749
696537	31-056	LG 927
696539	33-003	LG 926
696539	33-005	LG 927
696540	33-003	LG 926
696540	33-005	LG 927
696541	33-006	LG 927
696854	83-280	LG 815
697014	30-074	LG 183
697014	30-829	LG 183
697015	30-076	LG 188
697029	30-033	LG 183
697029	30-824	LG 183
697036	33-342	LG 784
697037	33-340	LG 784
697152	30-073	LG 183
697153	30-074	LG 183
697153	30-122	LG 183
697292	30-077	LG 188
697634	30-074	LG 183
697634	30-829	LG 183
698083	30-074	LG 183
698083	30-829	LG 183
698181	07-125	LG 766
698182	07-408	LG 766
698183	07-406	LG 767
698185	49-223	LG 604
698369	30-919	LG 188
698413	30-073	LG 183
698717	50-027	LG 747
698717	50-448	LG 748
698754	30-032	LG 182
698754	30-136	LG 182
699334	31-907	LG 929
699655	36-101	LG 750
699833	49-132	LG 749
699933	50-408	LG 745
710265	30-761	LG 183
710266	30-762	LG 183
710268	30-962	LG 188
7102688YP	30-962	LG 188
715075	49-359	LG 628
715155	49-361	LG 628
715231	33-347	LG 784
73111GS	30-702	LG 185
790166	30-123	LG 183
790717	33-341	LG 784
791850	02-040	LG 765
792038	30-161	LG 184
792101	30-139	LG 183
792105	30-145	LG 184
792303	30-975	LG 188
792383	49-223	LG 604
792385	49-223	LG 604
792395	33-342	LG 784
793281	33-342	LG 784
793352	33-342	LG 784
793569	30-167	LG 184

X

2019 OEM X-Reference

BRIGGS & STRATTON

OEM No.	OREGON	Page
793676	30-446	LG 188
793685	30-448	LG 188
794071	30-449	LG 188
794209	50-408	LG 745
794360	33-417	LG 731
794421	30-073	LG 183
795066	30-172	LG 184
795083	49-007	LG 622
795083	49-037	LG 622
795115	30-074	LG 183
795121	33-700	LG 915
795121	33-708	LG 915
795121	33-770	LG 915
795121	33-778	LG 915
795315	33-347	LG 784
795629	49-069	LG 746
795890	83-280	LG 815
795990	83-030	LG 815
796031	30-851	LG 184
796032	30-852	LG 184
796254	30-181	LG 189
796611	49-235	LG 625
796964	33-353	LG 785
797007	30-073	LG 183
797008	30-074	LG 183
797033	30-173	LG 184
797182	33-402	LG 731
797375	33-402	LG 731
797704	30-445	LG 189
797819	30-186	LG 184
798452	30-168	LG 185
798853	33-347	LG 784
798897	30-182	LG 185
799285	33-342	LG 784
799471	33-342	LG 784
799579	30-183	LG 189
799650	33-347	LG 784
799651	33-352-0	LG 784
799868	50-657	LG 596
802574	33-341	LG 784
802574	33-353	LG 785
805113	30-736	LG 185
805259	49-413	LG 749
805267	30-450	LG 189
808106	33-740	LG 916
808281	07-700	LG 767
808322	07-700	LG 767
808656	07-700	LG 767
820263	30-075	LG 185
841579	49-001	LG 622
841579	49-004	LG 622
845907	33-402	LG 731
846451	33-740	LG 916
89660	49-040-0	LG 749
89838	42-452	LG 867
89966	35-001	LG 806
89966	35-007	LG 806
91539	80-037	LG 727
93053	02-040	LG 765
95162	02-040	LG 765
99158	45-259	LG 224
99333	49-363	LG 624
AM30950	33-362	LG 784
MIU11286	30-139	LG 183
MU710268	30-962	LG 188
T393152	31-908	LG 929
T398188	49-036	LG 628
T490937	49-304	LG 603
T494245	30-710	LG 181

BUNTON-GOODALL

OEM No.	OREGON	Page
128110	15-269	LG 270
218134	75-207	LG 256
2186205	82-019	LG 875
2186207	82-017	LG 875
2188134	75-207	LG 256
2188153	33-082	LG 946
2702758	82-018	LG 875
2720759	82-016	LG 875
2721337	33-136	LG 737
2722016	33-132	LG 735
483025	78-121	LG 827
P L7323	45-225	LG 232
P0209	45-010	LG 238
P2189	72-410	LG 1030
PAL0368A	34-023	LG 822
PAL0368A	78-031	LG 826
PAL0806A	82-308	LG 874
PAL0903	33-386	LG 942
PG757	75-101	LG 269
PJH1054	09-804	LG 233
PL0371	48-080	
PL0417	09-801	LG 229
PL0458	45-078	LG 230
PL0609	45-220	LG 232
PL0622	78-644	LG 835
PL0642	72-745	LG 1033
PL0878	48-211	LG 233
PL0941	45-010	LG 238
PL1246	78-646	LG 841
PL1443	15-270	LG 270
PL4007	33-330	LG 729
PL4205	396-735*	LG 452
PL4205	596-308*	LG 548
PL4205	96-308*	LG 456
PL4206	396-726*	LG 391
PL4206	596-344*	LG 495
PL4206	91-256	LG 437
PL4206	96-344*	LG 536
PL4275	75-720	LG 270
PL4511	15-271	LG 270
PL4513	15-272	LG 270
PL4518	33-015	LG 948
PL4609	45-220	LG 232
PL4732	15-274	LG 270
PL4732	15-277	LG 270
PL4733	15-275	LG 270
PL4734	15-276	LG 270
PL4740	15-278	LG 270
PL4811	15-279	LG 270
PL4813	15-280	LG 270
PL4969	45-242	LG 243
PL5039	15-281	LG 270
PL6011	15-282	LG 270
PL6062	15-283	LG 270
PL7329	396-723*	LG 413
PL7329	596-323*	LG 453
PL7329	91-505	LG 477
PL7329	96-323*	LG 477
PL7332	15-286	LG 270
PL7436	15-287	LG 270
PL7441	396-740*	LG 415
PL7441	596-319*	LG 415
PL7441	91-506	LG 473
PL7441	96-319*	LG 415
PL7488	83-400	LG 819
PL7540	72-311-1	LG 1039
PL8036A	34-007	LG 826
PL8122	07-315	LG 772
PL8519	15-288	LG 270
PL8540A	78-121	LG 827
PLO035	43-075	
PLO417	09-801	LG 229
PLO457	48-200	LG 694
PLO458	45-078	LG 230
PLO511	75-222	LG 252
PLO543	15-289	LG 269
PLO556	48-205	LG 694
PLO609	45-220	LG 232
PLO617	09-802	LG 233
PLO619	75-221	LG 280
PLO622	78-644	LG 835
PLO642	72-745	LG 1033
PLO643	75-223	LG 269
PLO648	15-290	LG 269
PLO661	15-291	LG 269
PLO848	15-292	LG 270
PLO861	15-293	LG 270
PLO878	48-211	LG 233
PLO941	45-010	LG 238
PM221	15-294	LG 270
PO209	45-010	LG 238

BURTON SUPPLY

OEM No.	OREGON	Page
754-0145	75-145	LG 300
954-0145	75-145	LG 300
954-0145A	75-145	LG 300
954-015A	75-145	LG 300

BUSH HOG

OEM No.	OREGON	Page
50020136	15-295	LG 271
50029159	396-629*	LG 393
50029159	596-629*	LG 393
50029160	396-737*	LG 583
50033779	91-489	LG 394
50034299	396-629*	LG 393
50034299	596-629*	LG 393
50034300	396-737*	LG 583
50034306	92-149	LG 392
50034307	396-737*	LG 583
50044451	92-135	LG 392
50055707	396-629*	LG 393
50055707	596-629*	LG 393
50056493	392-142*	LG 413
50056493	396-629*	LG 393
50056493	596-629*	LG 393
50056493	92-134	LG 393
50056494	92-149	LG 392
50056495	396-737*	LG 583
50056498	92-135	LG 392
65482	15-296	LG 270
66474	15-297	LG 270
66552	15-299	LG 271
82324	396-629*	LG 393
82324	596-629*	LG 393
82324	91-071	LG 393
823242	396-629*	LG 393
823242	596-629*	LG 393
823242	91-071	LG 393
823242	91-539	LG 393
823242	92-134	LG 393
823243	396-629*	LG 393
823243	596-629*	LG 393
823243	91-071	LG 393
823243	91-539	LG 393
823243	92-134	LG 393
82325	396-737*	LG 583
82325	91-034	LG 583
823250	396-737*	LG 583
823250	91-034	LG 583
823250	92-164	LG 583
823259	396-737*	LG 583
823259	91-034	LG 583
823259	92-164	LG 583
83120	15-313	LG 271
83121	15-314	LG 271
83136	15-315	LG 271
84302	15-317	LG 271
84303	15-318	LG 271
86326	15-316	LG 271
88667	115-203	LG 271
88668	396-712*	LG 449
88668	596-346*	LG 393
88668	91-035	LG 393
88668	96-346*	LG 449
88773	396-778*	LG 394
88773	91-036	LG 450
88773	96-778*	LG 394
88843	115-202	LG 271
90880	15-302	LG 271
93991	15-303	LG 271
94144	15-304	LG 271
94897	15-305	LG 271
94898	15-306	LG 271
94899	15-307	LG 271
94900	15-308	LG 271
95754	396-629*	LG 393
95754	596-629*	LG 393
95755	396-737*	LG 583
96814	15-309	LG 271
97315	15-310	LG 271
99073	33-028	LG 947

CALDOR

OEM No.	OREGON	Page
754-0240	75-009	LG 301
754-0241	75-012	LG 301
754-0241954-0240	75-012	LG 301
754-0935	75-092	LG 304
754-0935954-0241A	75-092	LG 304
954-0241	75-012	LG 301

CANADIAN TIRE

OEM No.	OREGON	Page
754-0151	75-004	LG 301

CANADIANA

OEM No.	OREGON	Page
50793	34-002	LG 821
51448	34-012	LG 821

CARLISLE

OEM No.	OREGON	Page
13X500-6	70-376	LG 958
13X650-6	70-364	LG 961
15X500-6	70-362	LG 958
15X600-6	70-365	LG 961
16X650-8	70-366	LG 961
16X650-8	70-375	LG 958
16X750-8	70-367	LG 961
18X850-8	70-368	LG 961
18X850-8	70-378	LG 958
18X950-8	70-369	LG 961
20X1000-10	70-371	LG 961
20X1000-8	70-370	LG 961
22X1100-8	70-363	LG 963
23X1050-12	70-373	LG 961
23X950-12	70-372	LG 961
410/350-4	70-361	LG 958
511051	70-145	LG 959
511075	70-146	LG 959
5111021	70-144	LG 959
5112701	70-147	LG 960
5112801	70-148	LG 960
511419	70-156	LG 961
511433	70-154	LG 961
511505	70-162	LG 964
518081	70-150	LG 960
5193171	70-149	LG 960
5193191	70-151	LG 960
5193201	70-152	LG 960
5193211	70-153	LG 960
5193431	70-157	LG 960
55A3N1	70-161	LG 964
55A3N9	70-164	LG 964
55A3P2	70-163	LG 964
560443	70-165	LG 964
560444	70-166	LG 964

X

* OREGON® Gator™ replacement blade

OEM No.	OREGON	Page
CARLTON		
A3E9-66E	58-242	LG 958
A3EP-GL25R	58-040	LG 961
N1C-GL-56E	58-110	LG 960
N1C-GL-57E	58-114	LG 960
N1C-GL-62E	58-112	LG 960
CARONI		
30800	82-019	LG 875
30800	82-357	LG 877
48007700	96-603*	LG 394
59006200	91-141	LG 394
59006200	96-605*	LG 394
71001000	396-707*	LG 395
71001000	91-142	LG 395
CASE		
12110	45-234	LG 224
2289	76-067-0	LG 726
25139	72-094	LG 1042
25140	72-307	LG 1038
A70090	30-080	LG 205
C12102	45-114	LG 938
C12110	45-000	LG 237
C12251	34-024	LG 822
C13012	34-012	LG 821
C-13012	34-012	LG 821
C15343	34-020	LG 821
C15343	78-037	LG 822
C-15343	34-020	LG 821
C15672	34-005	LG 821
C17213	34-034	LG 821
C18966	34-008	LG 821
C18966	34-024	LG 822
C20465	34-023	LG 822
C20465	78-032	LG 822
C23359	15-320	LG 272
C23456	34-031	LG 821
C-25139	72-306	LG 1038
C26191	83-283	LG 818
C26191	83-403	LG 818
C26525	33-334	LG 730
C26525	33-335	LG 730
C26525	33-336	LG 730
C-26525	33-334	LG 730
C-26525	33-336	LG 730
C266525	33-334	LG 730
C-28025	34-008	LG 821
C-2883	30-080	LG 205
C28883	30-819	LG 205
C-28971	45-295	LG 232
C29735	45-207	LG 236
C33024	33-334	LG 730
C33024	33-335	LG 730
C33024	33-336	LG 730
C33025	33-334	LG 730
C-33025	33-334	LG 730
C-33025	33-336	LG 730
C33445	83-010	LG 819
C33445	83-400	LG 819
C375569	33-117	LG 733
C37891	78-044-1	LG 834
G900-2518	78-044-1	LG 834
N9552	33-720	LG 920
CENEX		
754-0145	75-145	LG 300
754-0151	75-004	LG 301
754-0151754-0179	75-004	LG 301
754-0194	75-090	LG 301
754-0194954-0266A	75-090	LG 301
754-0201	75-441	LG 334
754-0234	75-441	LG 334
754-0240	75-009	LG 301
754-0240954-0226	75-009	LG 301
754-0241	75-012	LG 301
754-0241954-0240	75-012	LG 301
754-0266	75-016	LG 301
754-0266954-0241A	75-016	LG 301
754-0935	75-092	LG 304
954-0145	75-145	LG 300
954-0145A	75-145	LG 300
954-015A	75-145	LG 300
954-0194	75-090	LG 301
954-0201	75-441	LG 334
954-0234	75-441	LG 334
954-0241	75-012	LG 301
954-0266	75-016	LG 301
954-0935	75-092	LG 304
CENTRAL HARDWARE		
754-0145	75-145	LG 300
754-0151	75-004	LG 301
754-0230	75-008	LG 301
754-0266	75-016	LG 301
754-0293	75-018	LG 301
954-0145	75-145	LG 300
954-0145A	75-145	LG 300
954-0151	75-004	LG 301
954-015A	75-145	LG 300
954-0230	75-008	LG 301
954-0266	75-016	LG 301
954-0266A	75-016	LG 301
954-0293	75-018	LG 301
CHAMPION		
CJ6	77-308-1	LG 865
CJ6Y	77-311-1	LG 865
CJ7Y	77-300-1	LG 864
CJ8	77-302-1	LG 864
CJ8	77-404	
CJ8Y	77-309-1	LG 865
DJ6J	77-316-1	LG 865
DJ7Y	77-318-1	LG 865
DJ8J	77-304-1	LG 865
J17LM	77-313-1	LG 865
J17LM	77-400-0	
J19LM	77-301-1	LG 864
J19LM	77-313-1	LG 865
J8C	77-317-1	LG 865
L86C	77-321-1	LG 865
N11YC	77-310-1	LG 865
N2C	77-323-1	LG 865
N9YC	77-315-1	LG 865
RC12YC	77-303-1	LG 865
RCJ6Y	77-307-1	LG 865
RCJ7Y	77-324-1	LG 865
RCJ8	77-306-1	LG 865
RCJ8Y	77-319-1	LG 865
RJ19LM	77-305-1	LG 865
RN11YC4	77-314-1	LG 865
RN9YC	77-312-1	LG 865
CHANNEL CO.		
754-0935	75-092	LG 304
954-0935	75-092	LG 304
CIFARELLI		
82.058.00	49-021	LG 629
82.060.00	55-333	LG 633
82.078.00	55-343	LG 627
82.079.00	55-342	LG 627
CLASSEN MFG CO		
100032	89-001	LG 590
CLINTON		
002-0233-00	30-081	LG 205
135-24	33-008	LG 789
170-159-500	35-007	LG 806
216-0050-00	55-333	LG 633
216-0119-00	55-333	LG 633
293-32-5	07-001	LG 765
39-268-500	49-401	LG 605
39-887-500	49-401	LG 605
39-914-500	49-401	LG 605
39-931	49-201	LG 608
CLUB CAR		
1016203	15-321	LG 272
101916701	15-322	LG 272
41016-67	83-282	LG 817
41016-67	83-402	LG 817
COAST TO COAST		
754-0145	75-145	LG 300
754-0151	75-004	LG 301
754-0178	75-179	LG 310
754-0194	75-090	LG 301
754-0201	75-441	LG 334
754-0230	75-008	LG 301
754-0234	75-441	LG 334
754-0240	75-009	LG 301
754-0241	75-012	LG 301
754-0266	75-016	LG 301
754-0293	75-018	LG 301
754-0329	75-145	LG 300
754-0350	75-035	LG 302
754-0935	75-092	LG 304
954-0145	75-145	LG 300
954-0145A	75-145	LG 300
954-0151	75-004	LG 301
954-015A	75-145	LG 300
954-0178	75-179	LG 310
954-0194	75-090	LG 301
954-0201	75-441	LG 334
954-0230	75-008	LG 301
954-0234	75-441	LG 334
954-0240	75-009	LG 301
954-0241	75-012	LG 301
954-0241A	75-012	LG 301
954-0266	75-016	LG 301
954-0266A	75-016	LG 301
954-0293	75-018	LG 301
954-0350	75-035	LG 302
954-0935	75-092	LG 304
GW-7540350	75-035	LG 302
COLUMBIA PRODUCTS		
754-0145	75-145	LG 300
754-0151	75-004	LG 301
754-0178	75-179	LG 310
754-0194	75-090	LG 301
754-0230	75-008	LG 301
754-0234	75-441	LG 334
754-0254	75-120	LG 300
754-0266	75-016	LG 301
754-0935	75-092	LG 304
954-0145	75-145	LG 300
954-0145A	75-145	LG 300
954-0151	75-004	LG 301
954-015A	75-145	LG 300
954-0178	75-179	LG 310
954-0194	75-090	LG 301
954-0230	75-008	LG 301
954-0266	75-016	LG 301
954-0266A	75-016	LG 301
954-0935	75-092	LG 304
COMET		
203589A	84-027	LG 675
203590	15-331	LG 272
203591	15-333	LG 272
203593	15-335	LG 272
203593A	15-335	LG 272
203594	15-337	LG 272
203597	15-339	LG 272
CONCORD		
754-0935	75-092	LG 304
954-0935	75-092	LG 304
COUNTRY CLIPPER		
1-7043	91-123	LG 395
1-7043	91-126	LG 548
1714	91-123	LG 395
79222	91-127	LG 396
79222	91-128	LG 424
7-9222	91-127	LG 396
7-9222	91-128	LG 424
79369	91-123	LG 395
79369	91-126	LG 548
79371	91-127	LG 396
79371	91-128	LG 424
7-9371	91-127	LG 396
7-9371	91-128	LG 424
79388	91-123	LG 395
79388	91-126	LG 548
7-9388	91-123	LG 395
7-9388	91-126	LG 548
942-04312	98-099	LG 412
C2897	45-227	LG 234
C-2897	45-227	LG 234
C28971	45-227	LG 234
C-28971	45-227	LG 234
D3389	15-350	LG 272
D3644	15-351	LG 272
D-3645	15-352	LG 272
D-3664	15-353	LG 272
D3671	15-354	LG 272
D3724	15-355	LG 272
D-3727	15-356	LG 272
D-3727-W	15-356	LG 272
D3728	15-357	LG 272
D-3733	15-358	LG 272
D-3733-W	15-358	LG 272
D3754	15-359	LG 272
D-3764-W	15-360	LG 272
D3769	15-361	LG 272
D-3777	15-363	LG 272
D-3777-W	15-363	LG 272
D-3778	15-364	LG 272
DOP33-119-1CC	33-119-1	LG 734
E6247	33-119-1	LG 734
E-6247	33-119-1	LG 734
H1665	91-557	LG 545
H1665	96-343*	LG 395
H-1665	91-536	LG 395
H-1665	91-557	LG 545
H-1665	92-150	LG 395
H-1665	96-343*	LG 395
H1666	91-126	LG 548
H1666	99-617*	LG 395
H-1666	91-123	LG 395
H-1666	91-126	LG 548
H-1666	99-617*	LG 395
H1667	91-127	LG 396
H1667	99-615*	LG 552
H-1667	91-127	LG 396
H-1667	91-128	LG 424
H-1667	99-615*	LG 552
H1708	91-128	LG 424
H1708	99-615*	LG 552
H-1708	91-127	LG 396
H-1708	99-615*	LG 552
H1714	91-123	LG 395
H1714	99-617*	LG 395
H-1714	91-123	LG 395
H1715	92-150	LG 395
H1715	96-343*	LG 395

X

* OREGON® Gator™ replacement blade

2019 OEM X-Reference

OEM No.	OREGON	Page
COUNTRY CLIPPER		
H-1715	91-536	LG 395
H-1715	91-557	LG 545
H-1715	92-150	LG 395
H-1715	96-343*	LG 395
H1885	45-300	LG 804
H2013	96-343*	LG 395
H-2013	91-536	LG 395
H-2013	91-557	LG 545
H-2013	92-150	LG 395
H-2013	96-343*	LG 395
H2122	99-615*	LG 552
H-2122	91-127	LG 396
H-2122	91-128	LG 424
H-2122	99-615*	LG 552
H2202	99-617*	LG 395
H-2202	91-123	LG 395
H-2202	91-126	LG 548
H-2202	99-617*	LG 395
H2203	99-615*	LG 552
H-2203	91-127	LG 396
H-2203	91-128	LG 424
H-2203	99-615*	LG 552
H2246	91-129	LG 396
H2246	96-129*	LG 396
H-2246	91-129	LG 396
H2251	96-129*	LG 396
H-2251	91-129	LG 396
H-2251	96-129*	LG 396
H2387	96-129*	LG 396
H-2387	91-129	LG 396
H-2387	92-179	LG 396
H-2387	96-129*	LG 396
H2397	91-544	LG 397
H2397	96-778*	LG 394
H-2397	91-544	LG 397
H2459	96-778*	LG 394
H-2459	91-036	LG 450
H-2459	91-533	LG 394
H-2459	91-544	LG 397
H-2459	96-778*	LG 394
H2499	91-129	LG 396
H2499	96-129*	LG 396
H-2499	91-129	LG 396
H-2499	96-129*	LG 396
H2500	91-128	LG 424
H2500	99-615*	LG 552
H-2500	91-127	LG 396
H-2500	91-128	LG 424
H-2500	99-615*	LG 552
H2501	96-778*	LG 394
H-2501	91-036	LG 450
H-2501	91-533	LG 394
H-2501	91-544	LG 397
H-2501	92-178	LG 397
H-2501	96-778*	LG 394
H2649	392-138*	LG 397
H2649	92-138	LG 396
H-2650	92-162	LG 397
H-2653	592-160*	LG 419
H-2653	92-160	LG 395
H-2654	592-137*	LG 396
H-2654	92-137	LG 396
H-2655	392-138*	LG 397
H-2655	92-138	LG 396
H-2656	92-162	LG 397
H-2659	592-160*	LG 419
H-2659	92-161	LG 395
H-2660	592-137*	LG 396
H-2660	92-163	LG 396
H-2665	592-160*	LG 419
H-2666	592-137*	LG 396
H-2667	392-138*	LG 397
H-2882	592-160*	LG 419
H-2882	91-123	LG 395
H-2882	91-126	LG 548
H-2882	92-160	LG 395
H-2882	92-161	LG 395
H-2882	92-180	LG 395
H-2882	99-617*	LG 395
H-2883	592-160*	LG 419
H-2883	92-154	LG 396
H-2884	592-137*	LG 396
H-2885	392-138*	LG 397
H-2885	92-166	LG 397
H-2886	392-138*	LG 397
H-2886	92-181	LG 397
H-37	15-358	LG 272
CRAFTSMAN		
100669K	95-015	LG 400
106634X	95-015	LG 400
106635X	95-014	LG 374
106635X	95-607*	LG 397
110785X	95-034	LG 377
114884	95-044	LG 465
120262X	95-034	LG 377
121263X	95-031	LG 377
121798X	95-027	LG 398
123431X	95-031	LG 377
126338X	95-034	LG 377
127841	595-613*	LG 463
127841	95-036	LG 463
127841	95-613*	LG 463
127842	195-033	LG 400
127842	595-601*	LG 400
127842	95-601*	LG 423
127843	195-032	LG 425
127843	596-900*	LG 380
127843	96-900*	LG 526
129277	95-051	LG 465
130652	95-006	LG 397
130652MS	95-006	LG 397
131322	595-601*	LG 400
131322	95-047	LG 378
131322	95-601*	LG 423
131323	195-032	LG 425
131323	596-900*	LG 380
131323	96-900*	LG 526
131694	95-051	LG 465
133128	195-005	LG 373
133128	596-900*	LG 380
133128	96-900*	LG 526
133346	95-051	LG 465
133348	195-021	LG 468
133348	595-602*	LG 403
133348	95-602*	LG 403
134148	195-003	LG 400
134148	595-601*	LG 400
134148	95-601*	LG 423
134148M	195-003	LG 400
134148M	595-601*	LG 400
134148M	95-601*	LG 423
134148X	195-003	LG 400
134148X	595-601*	LG 400
134148X	95-601*	LG 423
134149	195-005	LG 373
134149	596-900*	LG 380
134149	96-900*	LG 526
134768	195-021	LG 468
134768	595-602*	LG 403
134768	95-602*	LG 403
134871	95-051	LG 465
136869	95-613*	LG 463
136969	595-613*	LG 463
136969	95-036	LG 463
137380	595-609*	LG 461
137380	95-018	LG 399
137380	95-609*	LG 376
138496	595-613*	LG 463
138496	95-036	LG 463
138496	95-613*	LG 463
138497	195-003	LG 400
138497	595-601*	LG 400
138497	95-601*	LG 423
138498	195-032	LG 425
138498	596-900*	LG 380
138498	96-900*	LG 526
138791	195-032	LG 425
138791	596-900*	LG 380
138791	96-900*	LG 526
138969	595-613*	LG 463
138969	95-036	LG 463
138969	95-613*	LG 463
138971	195-032	LG 425
138971	596-900*	LG 380
138971	96-900*	LG 526
139744MS	195-003	LG 400
139744MS	595-601*	LG 400
139744MS	95-601*	LG 423
139774	195-003	LG 400
139774	595-601*	LG 400
139774	95-601*	LG 423
139775	195-019	LG 466
139775	596-900*	LG 380
139775	96-900*	LG 526
140026	98-007	LG 401
140026	98-102*	LG 410
141114	195-021	LG 468
141114	595-602*	LG 403
141114	95-602*	LG 403
143969	95-034	LG 377
143978X	95-031	LG 377
145106	95-051	LG 465
145708	595-614*	LG 459
145708	95-045	LG 374
145708	95-614*	LG 375
152443	595-614*	LG 459
152443	95-045	LG 374
152443	95-614*	LG 375
157033	595-614*	LG 459
157033	95-052	LG 398
157033	95-614*	LG 375
157101	195-021	LG 468
157101	595-602*	LG 403
157101	95-602*	LG 403
159267	595-621*	LG 467
159267	95-071	LG 402
159267	95-621*	LG 402
163819	595-614*	LG 459
163819	95-045	LG 374
163819	95-614*	LG 375
170698	595-614*	LG 459
170698	95-052	LG 398
170698	95-614*	LG 375
1736043AYP	91-616	LG 543
1736043AYP	96-398*	LG 525
1736044AYP	91-615	LG 522
173920	195-062	LG 376
173920	596-615*	LG 529
173920	96-615*	LG 461
173921	596-615*	LG 529
173921	95-068	LG 376
173921	96-615*	LG 461
175064	595-621*	LG 467
175064	95-057	LG 380
175064	95-621*	LG 402
176084	595-614*	LG 459
176084	95-052	LG 398
176084	95-614*	LG 375
180054	195-062	LG 376
180054	596-615*	LG 529
180054	96-615*	LG 461
187255	595-605*	LG 422
187255	95-082	LG 372
187255	95-605*	LG 463
187256	195-072	LG 530
187256	595-605*	LG 422
187256	95-605*	LG 463
189028	195-067	LG 380
189028	595-621*	LG 467
189028	95-621*	LG 402
24676	195-005	LG 373
24676	596-900*	LG 380
24676	96-900*	LG 526
24691	95-015	LG 400
24692	195-003	LG 400
24692	595-601*	LG 400
24692	95-601*	LG 423
25034	95-014	LG 374
25034	95-607*	LG 397
25034R	95-014	LG 374
25034R	95-607*	LG 397
25036	95-015	LG 400
25036R	95-015	LG 400
25322	95-011	
25322R	95-011	
25744	595-024*	LG 465
25744	95-041	LG 401
33203	595-024*	LG 465
33203	95-024	LG 465
33204	595-024*	LG 465
33204	95-024	LG 465
33214	595-602*	LG 403
33214	95-023	LG 380
33214	95-602*	LG 403
33219	595-602*	LG 403
33219	95-023	LG 380
33219	95-602*	LG 403
402463	95-076	LG 404
402463	95-615*	LG 426
406707	595-602*	LG 403
406707	95-073	LG 533
406707	95-602*	LG 403
406712	595-621*	LG 467
406712	95-057	LG 380
406712	95-621*	LG 402
406713	595-602*	LG 403
406713	95-023	LG 380
406713	95-602*	LG 403
421825	95-076	LG 404
421825	95-615*	LG 426
422719	195-005	LG 373
422719	596-900*	LG 380
422719	96-900*	LG 526
424752	195-005	LG 373
424752	596-900*	LG 380
424752	96-900*	LG 526
532106634	95-015	LG 400
532121263	95-031	LG 377
532130652	95-049	LG 459
532134148	195-003	LG 400
532134148	595-601*	LG 400
532134148	95-601*	LG 423
532139774	195-003	LG 400
532139774	595-601*	LG 400
532139774	95-601*	LG 423
532143978	95-031	LG 377
532406707	595-602*	LG 403
532406707	95-073	LG 533
532406707	95-602*	LG 403
532406713	595-602*	LG 403
532406713	95-023	LG 380
532406713	95-602*	LG 403
532752233	95-044	LG 465
532752234	195-021	LG 468
532752234	595-602*	LG 403
532752234	95-602*	LG 403
532850973	595-602*	LG 403
532850973	95-023	LG 380

X

* OREGON® Gator™ replacement blade

OEM No.	OREGON	Page
CRAFTSMAN		
532850973	95-602*	LG 403
56400	595-024*	LG 465
56400	95-024	LG 465
580244001	95-615*	LG 426
580258101	595-621*	LG 467
580258101	95-621*	LG 402
580258102	595-621*	LG 467
580258102	95-621*	LG 402
582931401	595-602*	LG 403
582931401	95-073	LG 533
582931401	95-602*	LG 403
585587701	95-615*	LG 426
69229	595-024*	LG 465
69229	95-024	LG 465
700973	195-021	LG 468
700973	595-602*	LG 403
700973	95-602*	LG 403
701213	595-602*	LG 403
701213	95-023	LG 380
701213	95-602*	LG 403
7322H	95-011	
742-04154	98-094	LG 514
742-04154	98-671*	LG 514
742-04154A	98-094	LG 514
742-04154A	98-671*	LG 514
752233	95-044	LG 465
752234	195-021	LG 468
752234	595-602*	LG 403
752234	95-602*	LG 403
80204	595-024*	LG 465
80204	95-024	LG 465
8029	595-024*	LG 465
8029	95-024	LG 465
850972	595-024*	LG 465
850972	95-024	LG 465
850973	595-602*	LG 403
850973	95-023	LG 380
850973	95-602*	LG 403
91333256	195-021	LG 468
91333256	595-602*	LG 403
91333256	95-602*	LG 403
91333269	195-021	LG 468
91333269	595-602*	LG 403
91333269	95-602*	LG 403
917532406707	595-602*	LG 403
917532406707	95-073	LG 533
917532406707	95-602*	LG 403
942-04154	98-094	LG 514
942-04154	98-671*	LG 514
942-04154A	98-094	LG 514
942-04154A	98-671*	LG 514
942-04244A	96-401*	LG 404
942-04244A	98-096	LG 404
942-04290	96-401*	LG 404
942-04290	98-096	LG 404
942-04312	598-629*	LG 575
942-04312	98-629*	LG 412
942-04417	392-139*	LG 398
942-04417	92-139	LG 398
942-0616A	198-059	LG 403
942-0616A	598-629*	LG 575
942-0616A	98-629*	LG 412
942-0741	198-049	LG 518
942-0741	598-631*	LG 390
942-0741	98-631*	LG 390
942-0741A	198-049	LG 518
942-0741A	598-631*	LG 390
942-0741A	98-631*	LG 390
942-0741A-X	598-631*	LG 390
942-0741A-X	98-631*	LG 390
9485H	95-011	
9497R	95-011	
STD325810	75-208	LG 277

OEM No.	OREGON	Page
CRUSADER		
754-0935	75-092	LG 304
954-0935	75-092	LG 304
CUB CADET		
00030779	15-581	LG 273
00030779	15-598	LG 301
00030782	34-209	LG 826
00050441	75-820	LG 273
00050441P	75-820	LG 273
01000399	75-808	LG 256
01001315	75-822	LG 254
01001805	91-144	LG 454
01001805	96-677*	LG 372
01002108P	33-184	LG 737
01002391	75-818	LG 253
01002391P	75-818	LG 253
01002932	75-701	LG 273
01003277	33-090	LG 948
01003280	91-144	LG 454
01003280	96-677*	LG 372
01003805	91-144	LG 454
01003805	96-677*	LG 372
01003968	75-821	LG 254
01004020	60-057	LG 706
01004081	78-046	LG 826
01004101	34-201	LG 822
01004315	75-822	LG 254
01004719	91-144	LG 454
01004719	96-677*	LG 372
01004719P	91-144	LG 454
01004719P	96-677*	LG 372
01004752	75-701	LG 273
01005011	75-821	LG 254
01005011P	75-821	LG 254
01005012	75-822	LG 254
01005012P	75-822	LG 254
01005337P	596-351*	LG 408
01005337P	96-351*	LG 408
01005337P	98-091	LG 516
01005338	596-300*	LG 519
01005338	96-300*	LG 519
01005338	98-071	LG 411
01005338P	596-300*	LG 519
01005338P	96-300*	LG 519
01005338P	98-071	LG 411
01005374	15-106	LG 273
01005374P	15-106	LG 273
01005375	15-107	LG 273
01005375P	15-107	LG 273
01005376	15-108	LG 273
01005376P	15-108	LG 273
01005378	15-583	LG 273
01005378P	15-583	LG 273
01007522	396-815*	LG 521
01008349	75-798	LG 253
01008349P	75-798	LG 253
01008616	596-373*	LG 512
01008616	98-080	LG 512
01009787	15-109	LG 273
01009787P	15-109	LG 273
01010168	592-015*	LG 515
01010168	92-015	LG 407
01010168-0637	592-015*	LG 515
01010168-0637	92-015	LG 407
01010168-X	592-015*	LG 515
01010168-X	92-015	LG 407
02000103	75-811	LG 254
02000103P	75-811	LG 254
02000154	15-110	LG 273
02000154P	15-110	LG 273
02000478	60-056	LG 706
02002648	15-111	LG 273
02002648P	15-111	LG 273
02003479P	60-057	LG 706

OEM No.	OREGON	Page
02003622	48-233	LG 724
02005017X	392-139*	LG 398
02005017X	92-139	LG 398
02005017-X	392-139*	LG 398
02005018-X	596-351*	LG 408
02005018-X	96-351*	LG 408
02005019	596-300*	LG 519
02005019	96-300*	LG 519
02005019	98-071	LG 411
02005019X	596-300*	LG 519
02005019X	96-300*	LG 519
02005019X	98-071	LG 411
02005019-X	596-300*	LG 519
02005019-X	96-300*	LG 519
02005020	596-373*	LG 512
02005020	98-080	LG 512
02005020-0637	596-373*	LG 512
02005020-0637	98-080	LG 512
1000399	75-808	LG 256
1002391	75-818	LG 253
1002932	75-701	LG 273
1003277	33-090	LG 948
1003968	75-821	LG 254
1004020	60-057	LG 706
1004081	78-046	LG 826
1004081	78-110	LG 833
1004101	34-201	LG 822
1004315	75-822	LG 254
1004719-0637	91-144	LG 454
1004719-0637	96-677*	LG 372
1004752	75-701	LG 273
1004772	96-381*	LG 406
1004772	98-081	LG 406
1005011	75-821	LG 254
1005012	75-822	LG 254
1005336P	392-139*	LG 398
1005336P	92-139	LG 398
1005337	596-351*	LG 408
1005337	96-351*	LG 408
1005337	98-091	LG 516
1005374	15-106	LG 273
1005375	15-107	LG 273
1005376	15-108	LG 273
1005378	15-583	LG 273
1008349	75-798	LG 253
1009787	15-109	LG 273
117210C1	30-098	LG 206
1185275	45-206	LG 231
1185615	45-000	LG 237
138412	33-116	LG 735
1737180	45-206	LG 231
1761083	33-019	LG 948
1766087	72-308-1	LG 1042
1767273	45-000	LG 237
1810014	45-206	LG 231
1H-545130-R92	33-320-0	LG 731
2000103	75-811	LG 254
2000154	15-110	LG 273
2000478	60-056	LG 706
2002648	15-111	LG 273
2004447	34-201	LG 822
2004558	34-209	LG 826
2005017	392-139*	LG 398
2005017	92-139	LG 398
2005018	596-351*	LG 408
2005018	96-351*	LG 408
2005018	98-091	LG 516
2005077	78-046	LG 826
30779	15-581	LG 273
30779	15-598	LG 301
30782	34-209	LG 826
384881-R93	45-000	LG 237
384881-R93	45-034	LG 224
384881-R94	45-000	LG 237
385163R2	30-081	LG 205

OEM No.	OREGON	Page
385168R2	30-080	LG 205
385168R2	30-819	LG 205
395789-R2	83-300	LG 819
465003R91	45-295	LG 232
465003R-91	45-295	LG 232
465003-R91	45-295	LG 232
470880R91	45-295	LG 232
470880R-91	45-295	LG 232
470880-R91	45-295	LG 232
488619	30-070	LG 216
488619	30-822	LG 216
488619R1	30-070	LG 216
488619R1	30-822	LG 216
490-100-C089	198-049	LG 518
490-100-C089	598-631*	LG 390
490-100-C089	98-631*	LG 390
490-100-M084	198-049	LG 518
490-100-M084	598-631*	LG 390
490-100-M084	98-631*	LG 390
490-110-C109	198-059	LG 403
490-110-C109	598-629*	LG 575
490-110-C109	98-629*	LG 412
490-110-C119	98-090	LG 519
490-110-C121	596-333*	LG 408
490-110-C121	91-440	LG 408
490-110-C121	96-333*	LG 408
490-110-C122	198-059	LG 403
490-110-C122	598-629*	LG 575
490-110-C122	98-629*	LG 412
490-110-C123	198-086	LG 565
490-110-C123	591-938*	LG 407
490-110-C123	91-938*	LG 514
490-110-C129	591-635*	LG 411
490-110-C129	91-058	LG 411
490-110-C129	91-635*	LG 411
490-110-C131	96-401*	LG 404
490-110-C131	98-096	LG 404
490-110-M108	598-629*	LG 575
490-110-M108	98-093	LG 411
490-110-M108	98-629*	LG 412
490-110-M115	198-059	LG 403
490-110-M115	598-629*	LG 575
490-110-M115	98-629*	LG 412
490-110-M126	198-086	LG 565
490-110-M126	591-938*	LG 407
490-110-M126	91-938*	LG 514
490-201-0002	83-300	LG 819
491395R1	78-114	LG 829
491395-R1	34-015	LG 821
491395-R1	78-114	LG 829
50441	75-820	LG 273
50441P	75-820	LG 273
542520R91	34-019	LG 821
545130R93	33-320-0	LG 731
545130-R93	33-320-0	LG 731
548436R1	30-082	LG 205
61606C1	30-093	LG 206
61606C1	30-812	LG 206
617530	45-206	LG 231
618-0282	73-827	
618-0282A	73-827	
618-0282B	73-827	
618-0282C	73-827	
618-0282D	73-827	
618-0282E	73-827	
618-0324	82-405	LG 878
618-0324A	82-405	LG 878
618-04123	82-401	LG 879
618-04123B	82-401	LG 879
618-04124A	82-402	LG 879
618-04125	82-403	LG 879
618-04125A	82-403	LG 879
618-04126	82-403	LG 879
618-04126A	82-403	LG 879
618-04129	82-412	LG 53

X

* OREGON® Gator™ replacement blade

2019 OEM X-Reference

OEM No.	OREGON	Page
CUB CADET		
618-04129A	82-412	LG 53
618-04129B	82-412	LG 53
618-0427	82-405	LG 878
618-0427A	82-405	LG 878
618-0427C	82-405	LG 878
618-04394	82-406	LG 880
618-04394	82-412	LG 53
618-04426	82-406	LG 880
618-04456	82-407	LG 880
618-04461	82-407	LG 880
618-04822	82-058	LG 898
618-04822A	82-058	LG 898
618-04825	82-043	LG 899
618-04825B	82-043	LG 899
618-04889	82-058	LG 898
618-04889A	82-058	LG 898
618-04950	82-058	LG 898
618-05016	82-043	LG 899
618-0595	82-518	LG 897
618-0624	82-405	LG 878
618-0624	82-408	LG 878
618-0659	82-408	LG 878
618-0660	82-409	LG 878
618-0660A	82-409	LG 878
618-0660B	82-409	LG 878
618-3129	82-411	LG 878
618-3129A	82-411	LG 878
618-3129B	82-411	LG 878
618-3129C	82-411	LG 878
618-3167	82-044	LG 879
634-04188	72-308-1	LG 1042
634-3159	72-026	LG 1039
651814R1	45-205	LG 228
651814R1	45-206	LG 231
651814-R1	45-205	LG 228
651814-R1	45-206	LG 231
651815R91	45-205	LG 228
651815R91	45-206	LG 231
651815-R91	45-205	LG 228
651815-R91	45-206	LG 231
656-3045	34-066	LG 832
684-04025	73-050	LG 846
684-04025A	73-050	LG 846
684-04027	73-050	LG 846
684-04027A	73-050	LG 846
700399	75-808	LG 256
702391	75-818	LG 253
703-1890	72-027	LG 1039
703-1890A	72-027	LG 1039
704752	75-701	LG 273
705011	75-821	LG 254
705012	75-822	LG 254
706-15686-00-11	73-050	LG 846
708349	75-798	LG 253
717-04080	33-126-1	LG 736
717-04163	33-133	LG 736
717-04163A	33-133	LG 736
717-04174	33-134	LG 736
717-04174A	33-134	LG 736
717-04183	33-255	LG 736
717-0949	33-110	LG 735
717-1425	84-014	LG 856
717-1434	33-110	LG 735
717-1459	33-112	LG 735
717-1708	33-125-1	LG 736
717-1709	33-139	LG 736
717-1774B	33-104	LG 735
717-1774C	33-104	LG 735
717-3390	33-185	LG 737
717-3446	33-124	LG 736
717-3446P	33-124	LG 736
718-04124A	82-402	LG 879
720103	75-811	LG 254
723-3014	83-300	LG 819
725-0268	33-240	LG 948
725-04019	33-106	LG 943
725-1657	33-084	LG 948
7251657A	33-084	LG 948
725-1657A	33-084	LG 948
725-3164	33-026	LG 947
725-3164A	33-026	LG 947
725-3164AP	33-026	LG 947
725-3166	33-019	LG 948
725-3232	33-024	LG 945
731-04869	73-833	LG 855
731-04869A	73-833	LG 855
731-04894	73-831	LG 856
731-04894A	73-831	LG 856
731-04894B	73-831	LG 856
731-04894C	73-831	LG 856
731-04894D	73-831	LG 856
731-04896	73-829	LG 856
731-04896A	73-829	LG 856
731-04896B	73-829	LG 856
731-04913	73-828	LG 856
731-05632	33-256	LG 946
731-06451	73-830	LG 856
731-0823	60-008	LG 703
731-0851	73-832	LG 855
731-0851A	73-832	LG 855
731-1313	73-834	LG 856
731-1313A	73-834	LG 856
731-1313B	73-834	LG 856
731-1313C	73-834	LG 856
734-04039	72-015	LG 1039
734-04039A	72-015	LG 1039
734-04155	72-025	LG 1039
734-04223	72-078	
734-1608	72-054	LG 1034
734-1656	72-054	LG 1034
734-1781	72-054	LG 1034
734-1782	72-054	LG 1034
734-1855	72-054	LG 1034
734-3058	72-308-1	LG 1042
734-3058B	72-015	LG 1039
734-3058B	72-308-1	LG 1042
734-3063	72-308-1	LG 1042
735-0243B	76-075	LG 727
741-0141	45-000	LG 237
741-0170	45-278	LG 240
741-04136	45-834	LG 242
741-04136A	45-834	LG 242
741-04136B	45-834	LG 242
741-04298	45-206	LG 231
741-0494	45-276	LG 231
741-0563	45-130	LG 232
741-0563	45-273	
741-0661	45-280	LG 231
741-0661A	45-280	LG 231
741-0661B	45-280	LG 231
741-0662	45-281	LG 240
741-0663	45-279	LG 855
741-3028	45-206	LG 231
741-3028P	45-206	LG 231
742-03002-0637	91-414	LG 405
742-0321	91-057	LG 409
742-0321	96-697*	LG 517
742-0322	91-057	LG 409
742-0322	96-697*	LG 517
742-0323	98-044	LG 409
742-04015	98-082	LG 513
742-04016	98-083	LG 404
742-04053	198-086	LG 565
742-04053	591-938*	LG 407
742-04053	91-938*	LG 514
742-04053A	198-086	LG 565
742-04053A	591-938*	LG 407
742-04053A	91-938*	LG 514
742-04053B	198-086	LG 565
742-04053B	591-938*	LG 407
742-04053B	91-938*	LG 514
742-04053C	198-086	LG 565
742-04053C	591-938*	LG 407
742-04053C	91-938*	LG 514
742-04056	591-938*	LG 407
742-04056	91-938*	LG 514
742-04056	98-097	LG 514
742-04056A	591-938*	LG 407
742-04056A	91-938*	LG 514
742-04056A	98-097	LG 514
742-04056A-0637	591-938*	LG 407
742-04056A-0637	91-938*	LG 514
742-04056A-0637	98-097	LG 514
742-04056B	591-938*	LG 407
742-04056B	91-938*	LG 514
742-04056B	98-097	LG 514
742-04056B-0637	591-938*	LG 407
742-04056B-0637	91-938*	LG 514
742-04056B-0637	98-097	LG 514
742-04056C	591-938*	LG 407
742-04056C	91-938*	LG 514
742-04056C	98-097	LG 514
742-04056C-0637	591-938*	LG 407
742-04056C-0637	91-938*	LG 514
742-04056C-0637	98-097	LG 514
742-04068	596-387*	LG 407
742-04068	96-387*	LG 515
742-04068	98-087	LG 407
742-04068C	596-387*	LG 407
742-04068C	96-387*	LG 515
742-04068C	98-087	LG 407
742-04087	198-153	LG 520
742-04087	598-629*	LG 575
742-04087	98-629*	LG 412
742-04101	591-635*	LG 411
742-04101	91-058	LG 411
742-04101	91-635*	LG 411
742-04124	98-084	LG 512
742-04124	98-637*	LG 512
742-04124-X	98-637*	LG 512
742-04125	598-640*	LG 405
742-04125	98-085	LG 561
742-04125	98-640*	LG 574
742-04125-X	598-640*	LG 405
742-04125-X	98-640*	LG 574
742-04126	98-090	LG 519
742-04154	98-094	LG 514
742-04154	98-671*	LG 514
742-04154A	98-094	LG 514
742-04154A	98-671*	LG 514
742-04244	96-401*	LG 404
742-04244	98-096	LG 404
742-04244A	96-401*	LG 404
742-04244A	98-096	LG 404
742-0424-X	98-637*	LG 512
742-04276	198-049	LG 518
742-04276	598-631*	LG 390
742-04276	98-631*	LG 390
742-04276S	198-049	LG 518
742-04276S	598-631*	LG 390
742-04276S	98-631*	LG 390
742-04290	96-401*	LG 404
742-04290	98-096	LG 404
742-04290-X	96-401*	LG 404
742-04308	598-629*	LG 575
742-04308	98-093	LG 411
742-04308	98-629*	LG 412
742-04312	598-629*	LG 575
742-04312	98-629*	LG 412
742-04360	598-629*	LG 575
742-04360	98-629*	LG 412
742-04361	96-401*	LG 404
742-04374	96-350*	LG 412
742-04380	598-631*	LG 390
742-04380	98-631*	LG 390
742-04380-0684	598-631*	LG 390
742-04380-0684	98-631*	LG 390
742-04410	598-629*	LG 575
742-04410	98-629*	LG 412
742-04415	596-300*	LG 519
742-04415	96-300*	LG 519
742-04415	98-071	LG 411
742-04415-X	596-300*	LG 519
742-04415-X	96-300*	LG 519
742-04415-XG	596-300*	LG 519
742-04415-XG	96-300*	LG 519
742-04416-X	596-351*	LG 408
742-04416-X	96-351*	LG 408
742-04417	392-139*	LG 398
742-04417	92-139	LG 398
742-04417-X	392-139*	LG 398
742-04418	396-815*	LG 521
742-04418-0637	396-815*	LG 521
742-0473	98-044	LG 409
742-0473A	98-044	LG 409
742-0493	98-493	LG 409
742-0504	98-044	LG 409
742-0504A	98-044	LG 409
742-0536	98-007	LG 401
742-0536	98-102*	LG 410
742-0537	98-537	LG 516
742-0563	98-007	LG 401
742-0563	98-102*	LG 410
7420616	198-059	LG 403
7420616	598-629*	LG 575
7420616	98-629*	LG 412
742-0616	198-059	LG 403
742-0616	598-629*	LG 575
742-0616	98-629*	LG 412
742-0616A	198-059	LG 403
742-0616A	598-629*	LG 575
742-0616A	98-629*	LG 412
742-0644	98-054	LG 574
742-0644	98-634*	LG 405
742-0645	98-069	LG 404
742-0645	98-670*	LG 512
742-0656	598-629*	LG 575
742-0656	98-093	LG 411
742-0656	98-629*	LG 412
742-0677	398-672*	LG 515
742-0677	598-672*	LG 515
742-0677	98-072	LG 408
742-0677	98-672*	LG 408
742-0677A	398-672*	LG 515
742-0677A	598-672*	LG 515
742-0677A	98-072	LG 408
742-0677A	98-672*	LG 408
742-0677B	398-672*	LG 515
742-0677B	598-672*	LG 515
742-0677B	98-072	LG 408
742-0677B	98-672*	LG 408
742-0721	98-007	LG 401
742-0721	98-102*	LG 410
742-0739	92-140	LG 516
742-0741	198-049	LG 518
742-0741	598-631*	LG 390
742-0741	98-631*	LG 390
742-0741A	198-049	LG 518
742-0741A	598-631*	LG 390
742-0741A	98-631*	LG 390
742-0741A-X	598-631*	LG 390
742-0741A-X	98-631*	LG 390
742-0741-X	598-631*	LG 390
742-0741-X	98-631*	LG 390
742-3002	91-414	LG 405
742-3003	90-656*	LG 406
742-3003	91-415	LG 406
742-3008	96-697*	LG 517
742-3009	91-329	LG 409

X

* OREGON® Gator™ replacement blade

CUB CADET

OEM No.	OREGON	Page
742-3009	96-697*	LG 517
742-3010	91-327	LG 404
742-3010-0637	91-327	LG 404
742-3011	91-330	LG 513
742-3011-0637	91-330	LG 513
742-3013	596-333*	LG 408
742-3013	91-440	LG 408
742-3013	96-333*	LG 408
742-3013-0637	596-333*	LG 408
742-3013-0637	91-440	LG 408
742-3013-0637	96-333*	LG 408
742-3018	91-332	LG 412
742-3018	96-350*	LG 412
742-3019	596-330*	LG 406
742-3019	90-697*	LG 406
742-3019	91-333	LG 406
742-3025	596-330*	LG 406
742-3025	90-697*	LG 406
742-3025	91-056	LG 406
742-3032	91-057	LG 409
742-3032	96-697*	LG 517
742-3036	596-373*	LG 512
742-3036	91-073	LG 512
742-3042	91-144	LG 454
742-3042	96-677*	LG 372
743-04039	72-015	LG 1039
746-04120	60-059	LG 706
746-04120t	60-059	LG 706
746-04143	60-062	LG 706
746-04173	60-527	LG 714
746-04173A	60-527	LG 714
746-04173B	60-527	LG 714
746-04173C	60-527	LG 714
746-0418	60-014	LG 712
746-0419	60-014	LG 712
746-04206	60-528	LG 708
746-04206A	60-528	LG 708
746-0421	60-014	LG 712
746-04229	46-032	LG 705
746-04229B	46-032	LG 705
746-04230	46-033	LG 714
746-04230A	46-033	LG 714
746-04352	60-137	LG 705
746-04352A	60-137	LG 705
746-04477	46-038	LG 715
746-04528A	46-039	LG 705
746-04528B	46-039	LG 705
746-04556	60-140	LG 715
746-04618A	46-041	LG 706
746-0472	60-012-0	LG 712
746-0477	46-317	LG 707
746-0477A	46-317	LG 707
746-0506	46-002	LG 856
746-0550	46-320	LG 707
746-0552	46-310	LG 713
746-0553	46-321	LG 707
746-0554	46-316	LG 707
746-0573	46-002	LG 856
746-0630	60-021	LG 706
746-0630A	60-021	LG 706
746-0633	60-012-0	LG 712
746-0634	60-014	LG 712
746-0634A	60-014	LG 712
746-0635	60-014	LG 712
746-0636	60-014	LG 712
746-0641	60-014	LG 712
746-0672	60-012-0	LG 712
746-0674	60-012-0	LG 712
746-0674A	60-012-0	LG 712
746-0713	46-004	LG 707
746-0713A	46-004	LG 707
746-0777	60-014	LG 712
746-0841	60-012-0	LG 712
746-0875	60-005	LG 704
746-0876	60-007	LG 704
746-0897	46-044	LG 710
746-0897A	46-044	LG 710
746-0898	46-006	LG 712
746-0898A	46-006	LG 712
746-0898B	46-006	LG 712
746-0901	46-338	LG 704
746-0902	46-046	LG 704
746-0903	46-047	LG 704
746-0910	46-005	LG 707
746-0910A	46-005	LG 707
746-0912	60-045	LG 707
746-0949	46-048	LG 711
746-0949A	46-048	LG 711
746-0951	46-341	LG 711
746-0951A	46-341	LG 711
746-0952	46-340	LG 711
746-0956	46-049	LG 705
746-0956A	46-049	LG 705
746-0956B	46-049	LG 705
746-0956C	46-049	LG 705
746-0970	46-050	LG 711
746-1085	60-039	LG 706
746-1085A	60-039	LG 706
746-1100	60-042	LG 712
746-1130	46-051	LG 712
751-10292	77-312-1	LG 865
751-10298	30-828	LG 194
751-10298	30-932	LG 196
751-10630	33-256	LG 946
751-10639	49-326	LG 768
751-10639A	49-326	LG 768
751-10645	33-746	LG 920
751-10645A	33-746	LG 920
751-11021	49-328	LG 606
751-11021A	49-328	LG 606
751-11196	33-745	LG 920
751-11219	49-331	LG 604
751-11219A	49-331	LG 604
751-11332	49-329	LG 604
751-11332A	49-329	LG 604
751-11355	49-327	LG 606
751-11355A	49-327	LG 606
751-12760A	49-329	LG 604
751-12762A	49-331	LG 604
751-12788A	49-328	LG 606
751-14321	49-327	LG 606
753-04856	72-308-1	LG 1042
753-04856A	72-015	LG 1039
753-04856A	72-308-1	LG 1042
753-0626	73-058	LG 848
754-0125	15-589	LG 273
754-0125A	15-589	LG 273
754-0142	15-590	LG 300
754-0178	75-179	LG 310
754-0181	15-593	LG 301
754-0197	75-079	LG 301
754-0201	75-441	LG 334
754-0240	75-009	LG 301
754-0241	75-012	LG 301
754-0241A	75-012	LG 301
754-0342	75-134	LG 275
754-0349	75-021	LG 274
754-0355	75-134	LG 275
754-04014	15-604	LG 275
754-04033	75-706	LG 256
754-04033A	75-706	LG 256
754-04041	15-013	LG 256
754-04043	75-886	LG 276
754-04043A	75-886	LG 276
754-04043B	75-886	LG 276
754-04044	75-710	LG 257
754-04044A	75-710	LG 257
754-04045	75-714	LG 276
754-04048	75-716	LG 276
754-04055	15-606	LG 275
754-04057	75-012	LG 301
754-04060	75-813	LG 276
754-04060A	75-813	LG 276
754-04060B	75-813	LG 276
754-04062	75-600	LG 276
754-04077	75-814	LG 276
754-04077A	75-814	LG 276
754-04118	75-815	LG 277
754-04122	15-025	LG 255
754-04138	15-112	LG 305
754-04138A	15-112	LG 305
754-04142	15-026	LG 277
754-04153	75-816	LG 257
754-04153A	75-816	LG 257
754-04207	15-613	LG 305
754-04219	15-027	LG 306
754-04240	15-028	LG 277
754-0434	75-999	LG 253
754-0438	15-616	LG 303
754-0461	75-824	LG 274
754-0483	15-619	LG 274
754-0640	75-823	LG 254
754-0641	15-623	LG 274
754-0644	75-655	LG 274
754-0645	75-656	LG 274
754-0645A	75-656	LG 274
754-3001	15-588	LG 275
754-3004	15-625	LG 275
754-3038	75-658	LG 275
754-3041	115-207	LG 275
754-3045	15-627	LG 275
754-3048	15-628	LG 275
754-3053	15-629	LG 304
754-3055	75-134	LG 275
754-3055A	75-134	LG 275
754-3068	75-812	LG 275
754-3073	75-569	LG 335
754-3073	75-659	LG 275
754-3084	115-208	LG 275
756-0225	34-008	LG 821
756-04216	34-065	LG 837
756-04224	78-028	LG 831
756-0515	34-015	LG 821
756-0515	78-034	LG 822
756-0542	34-205	LG 826
756-0981	78-028	LG 831
756-0981A	78-028	LG 831
756-0981B	78-028	LG 831
756-1229	78-046	LG 826
756-3005	34-019	LG 821
756-3045	34-066	LG 832
756-3045A	34-066	LG 832
756-3062	34-206	LG 826
759-04013	91-144	LG 454
759-04013	96-677*	LG 372
759-04019	98-082	LG 513
759-04020	98-083	LG 404
759-04047	596-387*	LG 407
759-04047	96-387*	LG 515
759-04047	98-087	LG 407
759-04081	591-635*	LG 411
759-04081	91-058	LG 411
759-04081	91-635*	LG 411
759-3359	30-093	LG 206
759-3359	30-812	LG 206
759-3411	91-442	LG 518
759-3547	30-098	LG 206
759-3812	91-414	LG 405
759-3813	90-656*	LG 406
759-3813	91-415	LG 406
759-3816	96-697*	LG 517
759-3817	91-329	LG 409
759-3817	96-697*	LG 517
759-3818	91-327	LG 404
759-3819	91-330	LG 513
759-3820	596-333*	LG 408
759-3820	91-440	LG 408
759-3820	96-333*	LG 408
759-3824	91-332	LG 412
759-3824	96-350*	LG 412
759-3825	596-330*	LG 406
759-3825	90-697*	LG 406
759-3825	91-333	LG 406
759-3826	596-330*	LG 406
759-3826	90-697*	LG 406
759-3826	91-056	LG 406
759-3829	91-057	LG 409
759-3829	96-697*	LG 517
759-3830	591-635*	LG 411
759-3830	91-058	LG 411
759-3830	91-635*	LG 411
759-3830-X	591-635*	LG 411
759-3830-X	91-635*	LG 411
759-3837	90-656*	LG 406
759-3837	91-415	LG 406
759-3839	91-442	LG 518
759-3857	596-333*	LG 408
759-3857	96-333*	LG 408
759-3929	596-373*	LG 512
759-3929	91-073	LG 512
759-3939	596-373*	LG 512
759-3939	91-073	LG 512
784-5485	73-050	LG 846
784-5576	73-054	LG 848
784-5579	73-058	LG 848
784-5579A	73-058	LG 848
784-5580-0637	73-826	
784-5581A	73-057	LG 848
784-5582	73-055	LG 848
784-5582A	73-055	LG 848
790-00117-0637	73-054	LG 848
790-00118-0637	73-055	LG 848
790-00119-0637	73-056	LG 848
790-00120-0637	73-057	LG 848
790-00121	73-058	LG 848
790-00121-0637	73-058	LG 848
790-00121-4021	73-058	LG 848
811-00303	60-016	LG 710
811-00500	60-016	LG 710
811-0185	60-016	LG 710
831-0798	60-008	LG 703
831-0823A	60-008	LG 703
903-1890	72-027	LG 1039
917-04080	33-126-1	LG 736
917-04163A	33-133	LG 736
917-04174	33-134	LG 736
917-04174A	33-134	LG 736
917-04183	33-255	LG 736
917-041ZA	33-134	LG 736
917-04622	33-255	LG 736
917-0949	33-110	LG 735
917-1425	84-014	LG 856
917-1434	33-110	LG 735
917-1459	33-112	LG 735
917-1708	33-125-1	LG 736
917-1709	33-139	LG 736
917-1774B	33-104	LG 735
917-1774C	33-104	LG 735
917-17774B	33-104	LG 735
917-3390	33-185	LG 737
917-3446	33-124	LG 736
918-0282D	73-827	
918-0282E	73-827	
918-0324	82-405	LG 878
918-04123B	82-401	LG 879
918-04124A	82-402	LG 879
918-04125	82-403	LG 879
918-04125A	82-403	LG 879
918-04125B	82-403	LG 879

X

* OREGON® Gator™ replacement blade

2019 OEM X-Reference

OEM No.	OREGON	Page
CUB CADET		
918-04126	82-403	LG 879
918-04126A	82-403	LG 879
918-04126B	82-403	LG 879
918-04129	82-412	LG 53
918-04129A	82-412	LG 53
918-04129B	82-411	LG 878
918-04129B	82-412	LG 53
918-0427	82-405	LG 878
918-0427A	82-405	LG 878
918-0427C	82-405	LG 878
918-04394	82-406	LG 880
918-04394	82-411	LG 878
918-04426	82-406	LG 880
918-04456	82-407	LG 880
918-04456A	82-407	LG 880
918-04461	82-407	LG 880
918-04822	82-058	LG 898
918-04822A	82-058	LG 898
918-04825	82-043	LG 899
918-04825B	82-043	LG 899
918-04889	82-058	LG 898
918-04889A	82-058	LG 898
918-04950	82-058	LG 898
918-05016	82-043	LG 899
918-0624	82-405	LG 878
918-0624	82-408	LG 878
918-0624A	82-408	LG 878
918-0659	82-408	LG 878
918-0659A	82-408	LG 878
918-0660	82-409	LG 878
918-0660A	82-409	LG 878
918-0660B	82-409	LG 878
918-3129	82-411	LG 878
918-3129A	82-411	LG 878
918-3129B	82-411	LG 878
918-3129C	82-411	LG 878
918-3167	82-044	LG 879
923-3014	83-300	LG 819
925-0268	33-240	LG 948
925-04019	33-106	LG 943
925-1657A	33-084	LG 948
925-3164A	33-026	LG 947
925-3166	33-019	LG 948
934-04223	72-078	
935-0243B	76-075	LG 727
941-0141	45-000	LG 237
941-0170	45-278	LG 240
941-04089	45-205	LG 228
941-04089	45-206	LG 231
941-04298	45-206	LG 231
941-0475	45-833	LG 855
941-0563	45-130	LG 232
941-0563	45-273	
942-04053	198-086	LG 565
942-04053	591-938*	LG 407
942-04053	91-938*	LG 514
942-04053A	198-086	LG 565
942-04053A	591-938*	LG 407
942-04053A	91-938*	LG 514
942-04053B	198-086	LG 565
942-04053B	591-938*	LG 407
942-04053B	91-938*	LG 514
942-04053C	198-086	LG 565
942-04053C	591-938*	LG 407
942-04053C	91-938*	LG 514
942-04053C-X	591-938*	LG 407
942-04053C-X	91-938*	LG 514
942-04053-X	591-938*	LG 407
942-04053-X	91-938*	LG 514
942-04056	591-938*	LG 407
942-04056	91-938*	LG 514
942-04056	98-097	LG 514
942-04056A	591-938*	LG 407
942-04056A	91-938*	LG 514
942-04056A	98-097	LG 514
942-04087	198-153	LG 520
942-04087	598-629*	LG 575
942-04087	98-629*	LG 412
942-04124	98-084	LG 512
942-04124	98-637*	LG 512
942-04124-X	98-637*	LG 512
942-04125	598-640*	LG 405
942-04125	98-085	LG 561
942-04125	98-640*	LG 574
942-04125-X	598-640*	LG 405
942-04125-X	98-640*	LG 574
942-04126	98-090	LG 519
942-04126-X	598-629*	LG 575
942-04126-X	98-629*	LG 412
942-04154	98-094	LG 514
942-04154	98-671*	LG 514
94204154A	98-094	LG 514
94204154A	98-671*	LG 514
942-04154A	98-094	LG 514
942-04154A	98-671*	LG 514
942-04244	96-401*	LG 404
942-04244	98-096	LG 404
94204244A	96-401*	LG 404
94204244A	98-096	LG 404
942-04244A	96-401*	LG 404
942-04244A	98-096	LG 404
942-04244A-X	96-401*	LG 404
942-04244-X	96-401*	LG 404
942-04276	198-049	LG 518
942-04276	598-631*	LG 390
942-04276	98-631*	LG 390
94204290	96-401*	LG 404
94204290	98-096	LG 404
942-04290	96-401*	LG 404
942-04290	98-096	LG 404
94204290X	96-401*	LG 404
94204290X	98-096	LG 404
94204308	198-059	LG 403
94204308	198-153	LG 520
94204308	598-629*	LG 575
94204308	98-093	LG 411
94204308	98-629*	LG 412
942-04308	598-629*	LG 575
942-04308	98-093	LG 411
942-04308	98-629*	LG 412
94204308X	198-059	LG 403
94204308X	198-153	LG 520
94204308X	598-629*	LG 575
94204308X	98-093	LG 411
94204308X	98-629*	LG 412
942-04308-X	598-629*	LG 575
942-04308-X	98-629*	LG 412
94204312	198-059	LG 403
94204312	198-153	LG 520
94204312	598-629*	LG 575
94204312	98-093	LG 411
94204312	98-629*	LG 412
942-04312	598-629*	LG 575
942-04312	98-629*	LG 412
942-04312-X	598-629*	LG 575
942-04312-X	98-629*	LG 412
942-04360	598-629*	LG 575
942-04360	98-629*	LG 412
942-04360-0684	598-629*	LG 575
942-04360-0684	98-629*	LG 412
942-04361	96-401*	LG 404
942-04361-0684	96-401*	LG 404
942-04374	96-350*	LG 412
942-04380	598-631*	LG 390
942-04380	98-631*	LG 390
942-04380-0684	598-631*	LG 390
942-04380-0684	98-631*	LG 390
942-04410	598-629*	LG 575
942-04410	98-629*	LG 412
942-04410-0684	598-629*	LG 575
942-04410-0684	98-629*	LG 412
94204415	596-300*	LG 519
94204415	96-300*	LG 519
94204415	98-071	LG 411
942-04415	596-300*	LG 519
942-04415	96-300*	LG 519
942-04415	98-071	LG 411
942-04415-X	596-300*	LG 519
942-04415-X	96-300*	LG 519
942-04416	596-351*	LG 408
942-04416	96-351*	LG 408
942-04416	98-091	LG 516
942-04416-X	596-351*	LG 408
942-04416-X	96-351*	LG 408
94204417	392-139*	LG 398
94204417	92-139	LG 398
942-04417	392-139*	LG 398
942-04417	92-139	LG 398
942-04417-X	392-139*	LG 398
942-0473A	91-057	LG 409
942-0473A	96-697*	LG 517
942-0504	98-044	LG 409
942-0504A	98-044	LG 409
942-0611-X	598-640*	LG 405
942-0611-X	98-640*	LG 574
942-0612-X	98-637*	LG 512
942-0616	198-059	LG 403
942-0616	598-629*	LG 575
942-0616	98-629*	LG 412
942-0616A	198-059	LG 403
942-0616A	598-629*	LG 575
942-0616A	98-629*	LG 412
942-0616-X	598-629*	LG 575
942-0616-X	98-629*	LG 412
942-0644	98-054	LG 574
942-0644	98-634*	LG 405
942-0645	98-069	LG 404
942-0645	98-670*	LG 512
942-0656	598-629*	LG 575
942-0656	98-093	LG 411
942-0656	98-629*	LG 412
942-0677B	398-672*	LG 515
942-0677B	598-672*	LG 515
942-0677B	98-072	LG 408
942-0677B	98-672*	LG 408
942-0721	98-007	LG 401
942-0721	98-102*	LG 410
942-0739	92-140	LG 516
942-0740	98-066	LG 409
942-0741	198-049	LG 518
942-0741	598-631*	LG 390
942-0741	98-631*	LG 390
942-0741A	198-049	LG 518
942-0741A	598-631*	LG 390
942-0741A	98-631*	LG 390
942-0741A-X	598-631*	LG 390
942-0741A-X	98-631*	LG 390
9420741X	198-049	LG 518
9420741X	598-631*	LG 390
9420741X	98-098	LG 410
9420741X	98-631*	LG 390
942-0741-X	598-631*	LG 390
942-0741-X	98-631*	LG 390
946-04143	60-062	LG 706
946-04173B	60-527	LG 714
946-04173C	60-527	LG 714
946-04206A	60-528	LG 708
946-04229	46-032	LG 705
946-04229B	46-032	LG 705
946-04230	46-033	LG 714
946-04230A	46-033	LG 714
946-04352	60-137	LG 705
946-04352A	60-137	LG 705
946-04477	46-038	LG 715
946-04477t	46-038	LG 715
946-04528A	46-039	LG 705
946-04528B	46-039	LG 705
946-04556	60-140	LG 715
946-04618	46-041	LG 706
946-04618A	46-041	LG 706
946-04618B	46-041	LG 706
946-04618C	46-041	LG 706
946-0477A	46-317	LG 707
946-0506	46-002	LG 856
946-0550	46-320	LG 707
946-0552	46-310	LG 713
946-0553	46-321	LG 707
946-0554	46-316	LG 707
946-0630A	60-021	LG 706
946-0634	60-014	LG 712
946-0674A	60-012-0	LG 712
946-0875	60-005	LG 704
946-0876	60-007	LG 704
946-0897	46-044	LG 710
946-0897A	46-044	LG 710
946-0898	46-006	LG 712
946-0898B	46-006	LG 712
946-0901	46-338	LG 704
946-0902	46-046	LG 704
946-0903	46-047	LG 704
946-0910A	46-005	LG 707
946-0951A	46-341	LG 711
946-0956B	46-049	LG 705
946-0956C	46-049	LG 705
946-1085A	60-039	LG 706
946-1100	60-042	LG 712
946-1130	46-051	LG 712
951-10630	33-256	LG 946
951-10639	49-326	LG 768
951-10639A	49-326	LG 768
951-10645	33-746	LG 920
951-10645A	33-746	LG 920
951-11021	49-328	LG 606
951-11021A	49-328	LG 606
951-11196	33-745	LG 920
951-11219	49-331	LG 604
951-11219A	49-331	LG 604
951-11332	49-329	LG 604
951-11332A	49-329	LG 604
951-11355	49-327	LG 606
951-11355A	49-327	LG 606
951-12760A	49-329	LG 604
951-12762A	49-331	LG 604
951-12788A	49-328	LG 606
951-14231	49-327	LG 606
954-0125	15-589	LG 273
954-0125A	15-589	LG 273
954-0142	15-590	LG 300
954-0178	75-179	LG 310
954-0181	15-593	LG 301
954-0190	15-594	LG 274
954-0197	75-079	LG 301
954-0201	75-441	LG 334
954-0218	15-595	LG 274
954-0240	75-009	LG 301
954-0241A	75-012	LG 301
954-0325	15-601	LG 274
954-0349	75-021	LG 274
954-0355	75-134	LG 275
95404003A	15-602	LG 304
954-04013	15-603	LG 304
954-04014	15-604	LG 275
954-04032B	75-249	LG 305
954-04033	175-706	LG 276
954-04033	75-706	LG 256
954-04033A	75-706	LG 256
954-04041	15-013	LG 256
954-04043	75-886	LG 276
954-04043A	75-886	LG 276

X

* OREGON® Gator™ replacement blade

CUB CADET

OEM No.	OREGON	Page
954-04043B	75-886	LG 276
954-04044	175-710	LG 276
954-04044	75-710	LG 257
954-04044A	75-710	LG 257
954-04045	175-714	LG 276
954-04045	75-714	LG 276
954-04047	15-605	LG 275
954-04048	75-716	LG 276
954-04055	15-606	LG 275
954-04057	75-012	LG 301
954-04060	75-813	LG 276
954-04060A	75-813	LG 276
954-04060B	175-813	LG 276
954-04060B	75-813	LG 276
954-04062	75-600	LG 276
954-04077	175-814	LG 276
954-04077	75-814	LG 276
954-04077A	75-814	LG 276
954-04100	15-609	LG 305
954-04118	175-815	LG 277
954-04118	75-815	LG 277
954-04122	15-025	LG 255
954-04137A	15-605	LG 275
954-04138	15-112	LG 305
954-04138A	15-112	LG 305
954-04142	15-026	LG 277
954-04153	75-816	LG 257
954-04153A	75-816	LG 257
954-04207	15-613	LG 305
954-04219	15-027	LG 306
954-04240	15-028	LG 277
954-0434	75-999	LG 253
954-0438	15-616	LG 303
954-0461	175-824	LG 274
954-0461	75-824	LG 274
954-0483	15-619	LG 274
954-0640	75-823	LG 254
954-0641	15-623	LG 274
954-0644	75-655	LG 274
954-0645	75-656	LG 274
954-0645A	75-656	LG 274
954-3001	15-588	LG 275
954-3004	15-625	LG 275
954-3038	75-658	LG 275
954-3041	115-207	LG 275
954-3045	15-627	LG 275
954-3048	15-628	LG 275
954-3053	15-629	LG 304
954-3055A	75-134	LG 275
954-3068	75-812	LG 275
954-3073	75-659	LG 275
954-3084	115-208	LG 275
956-04216	34-065	LG 837
956-04224	78-028	LG 831
956-0981	78-028	LG 831
956-0981B	78-028	LG 831
956-3045	34-066	LG 832
956-3045A	34-066	LG 832
984-04027	73-050	LG 846
984-04027A	73-050	LG 846
984-5485	73-050	LG 846
CC-742-0741	198-049	LG 518
CC-742-0741	598-631*	LG 390
CC-742-0741	98-631*	LG 390
CC-742-3033	591-635*	LG 411
CC-742-3033	91-058	LG 411
CC-742-3033	91-635*	LG 411
GW-1185616	45-000	LG 237
GW-1761083	33-019	LG 948
GW-1767273	45-000	LG 237
GW-1772388	33-112	LG 735
GW-7251657A	33-084	LG 948
GW-7420616	198-059	LG 403
GW-7420616	598-629*	LG 575
GW-7420616	98-629*	LG 412
GW-9401	45-206	LG 231
GW-B1185275	45-206	LG 231
GW-B1185615	45-000	LG 237
GW-B1185616	45-000	LG 237
HR-542520-R1	34-019	LG 821
IH-384881-R1	45-000	LG 237
IH-384881-R1	45-034	LG 224
IH-384881-R93	45-000	LG 237
IH-384881-R93	45-034	LG 224
IH-384881-R94	45-000	LG 237
IH-384881-R94	45-034	LG 224
IH-385168-R2	30-080	LG 205
IH-395789-R2	83-300	LG 819
IH-465003-R91	45-295	LG 232
IH-470880-R91	45-295	LG 232
IH-470880-R92	45-295	LG 232
IH-488619-R1	30-070	LG 216
IH-488619-R1	30-822	LG 216
IH-545130-R93	33-320-0	LG 731
IH-59701-C1	15-625	LG 275
IH-59704-C1	91-414	LG 405
IH-61104-C1	90-656*	LG 406
IH-61104-C1	91-415	LG 406
IH-651814-R1	45-205	LG 228
IH-651814-R1	45-206	LG 231
IH-651815-R91	45-205	LG 228
IH-651815-R91	45-206	LG 231
IH-83614-C1	91-442	LG 518
OCC-01004719	91-144	LG 454
OCC-01004719	96-677*	LG 372
OCC-01010168	592-015*	LG 515
OCC-01010168	92-015	LG 407
OCC-742-04053	198-086	LG 565
OCC-742-04053	591-938*	LG 407
OCC-742-04053	91-938*	LG 514
OCC-742-04068	596-387*	LG 407
OCC-742-04068	96-387*	LG 515
OCC-742-04068	98-087	LG 407
OCC-742-04101	591-635*	LG 411
OCC-742-04101	91-058	LG 411
OCC-742-04101	91-635*	LG 411
OCC-742-04126	98-090	LG 519
OCC-742-04154	98-094	LG 514
OCC-742-04154	98-671*	LG 514
OCC-742-04244	96-401*	LG 404
OCC-742-04244	98-096	LG 404
OCC-742-04312	598-629*	LG 575
OCC-742-04312	98-093	LG 411
OCC-742-04312	98-629*	LG 412
OCC-742-0616	198-059	LG 403
OCC-742-0616	598-629*	LG 575
OCC-742-0616	98-629*	LG 412
OCC-742-0677	398-672*	LG 515
OCC-742-0677	598-672*	LG 515
OCC-742-0677	98-072	LG 408
OCC-742-0677	98-672*	LG 408
OCC-742-0739	92-140	LG 516
OCC-742-3013	596-333*	LG 408
OCC-742-3013	91-440	LG 408
OCC-742-3013	96-333*	LG 408
OCC-742-3019	596-330*	LG 406
OCC-742-3019	90-697*	LG 406
OCC-742-3019	91-333	LG 406
OCC-742-3036	596-373*	LG 512
OCC-742-3036	91-073	LG 512
OCC-754-04207	15-613	LG 305
OCC-754-04219	15-027	LG 306
OCC-754-04240	15-028	LG 277
OEM-742-04053	198-086	LG 565
OEM-742-04053	591-938*	LG 407
OEM-742-04053	91-938*	LG 514
OEM-742-04308	598-629*	LG 575
OEM-742-04308	98-093	LG 411
OEM-742-04308	98-629*	LG 412
OEM-742-0473	98-044	LG 409
OEM-742-0473A	98-044	LG 409
OEM-742-0616	198-059	LG 403
OEM-742-0616	598-629*	LG 575
OEM-742-0616	98-629*	LG 412
OEM-742-0641	598-631*	LG 390
OEM-742-0641	98-098	LG 410
OEM-742-0641	98-631*	LG 390
OEM-742-0677	398-672*	LG 515
OEM-742-0677	598-672*	LG 515
OEM-742-0677	98-072	LG 408
OEM-742-0677	98-672*	LG 408
OEM-742-0721	98-007	LG 401
OEM-742-0721	98-102*	LG 410
OEM-742-0741	198-049	LG 518
OEM-742-0741	598-631*	LG 390
OEM-742-0741	98-631*	LG 390
OEM-754-0142	15-590	LG 300
OEM-754-0197	75-079	LG 301
OEM-754-04014	15-604	LG 275
OEM-754-0438	15-616	LG 303
OEM-754-0483	15-619	LG 274
ST207	45-259	LG 224
TC30727	30-070	LG 216
TC30727	30-822	LG 216
WD-C38410	33-113	LG 740
YS-756-3062	34-206	LG 826

CURTIS

58237	49-834	LG 611
58238	49-810	LG 612
58243-21	49-021	LG 629

CUSHMAN

111836	83-300	LG 819
825619	07-112	LG 774
833438	83-282	LG 817
833438	83-402	LG 817
834702	83-011	LG 819

DAYCO

L320	75-320	LG 334
L321	75-321	LG 334
L322	75-322	LG 334
L323	75-323	LG 334
L324	75-324	LG 334
L325	75-325	LG 334
L326	75-326	LG 334
L327	75-327	LG 334
L328	75-328	LG 334
L329	75-329	LG 334
L330	75-330	LG 334
L331	75-331	LG 334
L332	75-332	LG 334
L333	75-333	LG 334
L334	75-334	LG 334
L335	75-335	LG 334
L336	75-336	LG 334
L337	75-337	LG 334
L338	75-338	LG 334
L339	75-339	LG 334
L340	75-340	LG 334
L341	75-341	LG 334
L342	75-342	LG 334
L343	75-343	LG 334
L344	75-344	LG 334
L345	75-345	LG 334
L346	75-346	LG 334
L348	75-348	LG 334
L349	75-349	LG 334
L350	75-350	LG 334
L4100	75-400	LG 335
L420	75-420	LG 334
L421	75-421	LG 334
L422	75-422	LG 334
L423	75-423	LG 334
L424	75-424	LG 334
L425	75-425	LG 334
L426	75-426	LG 334
L427	75-427	LG 334
L428	75-428	LG 334
L429	75-429	LG 334
L431	75-431	LG 334
L432	75-432	LG 334
L433	75-433	LG 334
L434	75-434	LG 334
L435	75-435	LG 334
L436	75-436	LG 334
L437	75-437	LG 334
L438	75-438	LG 334
L439	75-439	LG 334
L440	75-440	LG 334
L441	75-441	LG 334
L442	75-442	LG 334
L443	75-443	LG 334
L444	75-444	LG 334
L445	75-445	LG 334
L446	75-446	LG 334
L447	75-447	LG 334
L448	75-448	LG 334
L449	75-449	LG 334
L450	75-450	LG 334
L451	75-451	LG 334
L452	75-452	LG 334
L453	75-453	LG 334
L454	75-454	LG 334
L455	75-455	LG 334
L456	75-456	LG 334
L457	75-457	LG 334
L458	75-458	LG 334
L459	75-459	LG 334
L460	75-460	LG 334
L461	75-461	LG 334
L462	75-462	LG 334
L463	75-463	LG 334
L464	75-464	LG 334
L465	75-465	LG 334
L466	75-466	LG 334
L467	75-467	LG 334
L468	75-468	LG 334
L469	75-469	LG 335
L470	75-470	LG 335
L471	75-471	LG 335
L472	75-472	LG 335
L473	75-473	LG 335
L474	75-474	LG 335
L475	75-475	LG 335
L476	75-476	LG 335
L477	75-477	LG 335
L478	75-478	LG 335
L479	75-479	LG 335
L480	75-480	LG 335
L481	75-481	LG 335
L482	75-482	LG 335
L483	75-483	LG 335
L484	75-484	LG 335
L485	75-485	LG 335
L486	75-486	LG 335
L487	75-487	LG 335
L488	75-488	LG 335
L489	75-489	LG 335
L490	75-490	LG 335
L491	75-491	LG 335
L492	75-492	LG 335
L493	75-493	LG 335
L494	75-494	LG 335
L495	75-495	LG 335
L496	75-496	LG 335
L497	75-497	LG 335
L498	75-498	LG 335

X

2019 OEM X-Reference

OEM No.	OREGON	Page
DAYCO		
L499	75-499	LG 335
L5100	75-500	LG 335
L527	75-527	LG 334
L528	75-528	LG 334
L529	75-529	LG 334
L530	75-530	LG 334
L531	75-531	LG 334
L532	75-532	LG 334
L533	75-533	LG 334
L534	75-534	LG 334
L535	75-535	LG 334
L536	75-536	LG 334
L537	75-537	LG 334
L538	75-538	LG 334
L539	75-539	LG 334
L540	75-540	LG 334
L541	75-541	LG 334
L542	75-542	LG 334
L543	75-543	LG 334
L544	75-544	LG 334
L545	75-545	LG 334
L546	75-546	LG 334
L547	75-547	LG 334
L548	75-548	LG 334
L549	75-549	LG 334
L550	75-550	LG 334
L551	75-551	LG 334
L552	75-552	LG 334
L553	75-553	LG 334
L554	75-554	LG 334
L555	75-555	LG 334
L556	75-556	LG 334
L557	75-557	LG 334
L558	75-558	LG 253
L559	75-559	LG 334
L560	75-560	LG 334
L561	75-561	LG 334
L562	75-562	LG 334
L563	75-563	LG 253
L564	75-564	LG 334
L565	75-565	LG 253
L566	75-566	LG 334
L567	75-567	LG 334
L568	75-568	LG 334
L569	75-569	LG 335
L570	75-570	LG 335
L571	75-571	LG 335
L572	75-572	LG 335
L573	75-573	LG 335
L574	75-574	LG 335
L575	75-575	LG 335
L576	75-576	LG 335
L577	75-577	LG 335
L578	75-578	LG 335
L579	75-579	LG 335
L580	75-580	LG 335
L581	75-208	LG 277
L581	75-581	LG 335
L582	75-582	LG 254
L583	75-583	LG 335
L584	75-584	LG 335
L585	75-585	LG 335
L586	75-586	LG 335
L587	75-587	LG 335
L588	75-588	LG 335
L589	75-589	LG 335
L590	75-590	LG 335
L591	75-591	LG 335
L592	75-592	LG 335
L593	75-593	LG 335
L594	75-594	LG 335
L595	75-595	LG 335
L596	75-596	LG 335
L597	75-597	LG 335
L598	75-598	LG 335
L599	75-599	LG 335
DEAN PHIPPS AUTO STOR		
754-0935	75-092	LG 304
954-0935	75-092	LG 304
DEINES		
700136	75-072	LG 268
DELCO		
1118988	33-320-0	LG 731
DESA/REMINGTON		
66841	49-021	LG 629
66844	49-816	LG 612
69018	49-816	LG 612
DEVERE		
4195	75-120	LG 300
DEWEZE		
520403	83-011	LG 819
DIXIE CHOPPER		
10161	82-322	LG 883
10161-HD	82-322	LG 883
10161-L	82-323	LG 883
10161-LHD	82-323	LG 883
10205	45-047	LG 241
10205	45-258	LG 224
10214-RB/2	70-363	LG 963
1057718	91-503	LG 424
1057718	91-506	LG 473
1057718	91-509	LG 424
1057718	91-527	LG 479
112947	91-503	LG 424
112947	91-506	LG 473
112947	91-509	LG 424
112947	91-527	LG 479
113579	91-502	LG 477
113579	91-505	LG 477
113579	91-508	LG 419
113579	91-525	LG 477
113625	75-283	LG 256
1657517	75-283	LG 256
1657517SM	75-283	LG 256
2006B103R	75-283	LG 256
2006B130R	15-368	LG 277
2006B38R	15-366	LG 277
2006B78R	75-208	LG 277
2006B80R	75-199	LG 254
2006B80W	75-199	LG 254
2006B84W	75-661	LG 277
20214	06-003	LG 805
20249	60-001	LG 708
20256	15-366	LG 277
227-72H	91-507	LG 415
227-72H	91-515	LG 415
255323	33-118-1	LG 733
265131	75-199	LG 254
300441	82-322	LG 883
300442	82-323	LG 883
300632	392-142*	LG 413
300632	92-142	LG 413
300819	392-141*	LG 413
300819	92-141	LG 413
301067	392-142*	LG 413
301067	92-142	LG 413
301068	392-141*	LG 413
301068	92-141	LG 413
30203	75-283	LG 256
30204	75-208	LG 277
30218	45-225	LG 232
30224	78-009	LG 827
30227-42	396-714*	LG 413
30227-42	91-501	LG 413
3022750	91-502	LG 477
3022750	91-505	LG 477
3022750	91-508	LG 419
3022750	91-525	LG 477
30227-50	396-723*	LG 413
30227-50	596-323*	LG 453
30227-50	91-502	LG 477
30227-50	96-323*	LG 477
30227-50E	396-723*	LG 413
30227-50E	596-323*	LG 453
30227-50E	96-323*	LG 477
3022750H	91-502	LG 477
3022750H	91-505	LG 477
3022750H	91-508	LG 419
3022750H	91-525	LG 477
30227-50H	396-723*	LG 413
30227-50H	596-323*	LG 453
30227-50H	91-508	LG 419
30227-50H	96-323*	LG 477
30227-50T	396-723*	LG 413
30227-50T	596-323*	LG 453
30227-50T	96-323*	LG 477
3022750V	91-502	LG 477
3022750V	91-505	LG 477
3022750V	91-508	LG 419
3022750V	91-525	LG 477
30227-50V	396-723*	LG 413
30227-50V	596-323*	LG 453
30227-50V	91-505	LG 477
30227-50V	96-323*	LG 477
30227-50X	396-723*	LG 413
30227-50X	596-323*	LG 453
30227-50X	91-525	LG 477
30227-50X	96-323*	LG 477
30227-52T	396-704*	LG 414
30227-52T	596-704*	LG 471
30227-52T	96-318*	LG 414
30227-52X	396-704*	LG 414
30227-52X	596-704*	LG 471
30227-52X	96-318*	LG 414
30227-56T	94-620*	LG 414
30227-56X	94-620*	LG 414
30227-60	396-740*	LG 415
30227-60	596-319*	LG 415
30227-60	91-503	LG 424
30227-60	96-319*	LG 415
30227-60E	396-740*	LG 415
30227-60E	596-319*	LG 415
30227-60E	96-319*	LG 415
30227-60H	396-740*	LG 415
30227-60H	596-319*	LG 415
30227-60H	91-509	LG 424
30227-60H	96-319*	LG 415
30227-60L	90-109	LG 414
30227-60L	91-503	LG 424
30227-60L	91-506	LG 473
30227-60L	91-509	LG 424
30227-60L	91-527	LG 479
30227-60N	90-109	LG 414
30227-60N	91-503	LG 424
30227-60N	91-506	LG 473
30227-60N	91-509	LG 424
30227-60N	91-527	LG 479
30227-60T	396-740*	LG 415
30227-60T	596-319*	LG 415
30227-60T	96-319*	LG 415
30227-60V	396-740*	LG 415
30227-60V	596-319*	LG 415
30227-60V	91-506	LG 473
30227-60V	96-319*	LG 415
30227-60X	396-740*	LG 415
30227-60X	596-319*	LG 415
30227-60X	91-527	LG 479
30227-60X	96-319*	LG 415
30227-66E	396-524*	LG 415
30227-66H	91-528	LG 415
30227-66T	396-524*	LG 415
30227-66X	396-524*	LG 415
30227-66X	91-528	LG 415
30227-66X2	91-528	LG 415
30227-72H	396-752*	LG 415
30227-72H	596-752*	LG 415
30227-72H	91-507	LG 415
30227-72N	396-752*	LG 415
30227-72N	596-752*	LG 415
30227-72N	91-515	LG 415
30227-72T	396-752*	LG 415
30227-72T	596-752*	LG 415
30227-72X	396-752*	LG 415
30227-72X	596-752*	LG 415
30227-74T	391-526*	LG 416
30227-74X	391-526*	LG 416
30227-74X	91-526	LG 416
30227-74X2	91-526	LG 416
30227H	91-502	LG 477
30227H	91-505	LG 477
30227H	91-508	LG 419
30227H	91-525	LG 477
30227-H	396-723*	LG 413
30227-H	596-323*	LG 453
30227-H	91-508	LG 419
30227-H	96-323*	LG 477
30227-N	396-723*	LG 413
30227-N	596-323*	LG 453
30227-N	91-508	LG 419
30227-N	96-323*	LG 477
30234	78-010	LG 827
302360	75-211	LG 277
30236-0	75-211	LG 277
40222	07-317	LG 771
48086	75-283	LG 256
500017	33-106	LG 943
50300	33-118-1	LG 733
60105	83-010	LG 819
60105	83-400	LG 819
63227	396-714*	LG 413
63227	91-501	LG 413
63227-H	396-714*	LG 413
63227-N	396-714*	LG 413
63227-N	91-501	LG 413
65071	27-001	
65080	75-199	LG 254
67249	60-001	LG 708
68140	83-010	LG 819
68250	60-001	LG 708
68250-DCM	60-001	LG 708
90122	30-026	LG 208
93227H	396-714*	LG 413
93227H	91-501	LG 413
97346C158	15-367	LG 277
9907B130	15-368	LG 277
9907B84	75-661	LG 277
A30227-50N	91-502	LG 477
A30227-50N	91-505	LG 477
A30227-50N	91-508	LG 419
A30227-50N	91-525	LG 477
A30227-60N	396-740*	LG 415
A30227-60N	596-319*	LG 415
A30227-60N	90-109	LG 414
A30227-60N	96-319*	LG 415
A60227-60N	91-503	LG 424
A60227-60N	91-506	LG 473
A60227-60N	91-509	LG 424
A60227-60N	91-527	LG 479

X

* OREGON® Gator™ replacement blade

DIXON

OEM No.	OREGON	Page
10213	82-341	LG 884
10214	82-340	LG 883
10215	82-342	LG 884
10216	82-342	LG 884
1022	72-765	LG 1043
10708	596-327*	LG 434
10708	96-327*	LG 417
10710	596-327*	LG 434
10710	91-369	LG 434
10710	96-327*	LG 417
10715	396-726*	LG 391
10715	596-344*	LG 495
10715	96-344*	LG 536
10782	95-085	LG 462
10881	595-085*	LG 462
10881	95-085	LG 462
10947	95-085	LG 462
11305	15-369	LG 278
11633	396-726*	LG 391
11633	596-344*	LG 495
11633	91-622	LG 536
11633	96-344*	LG 536
11645	396-735*	LG 452
11645	596-308*	LG 548
11645	91-620	LG 470
11645	96-308*	LG 456
11913	599-133*	LG 422
11913	96-133*	LG 422
11914	599-133*	LG 422
11914	96-133*	LG 422
11949	599-133*	LG 422
11949	96-133*	LG 422
12033	15-370	LG 278
12172	15-371	LG 278
12339	396-764*	LG 537
12339	596-341*	LG 482
12339	91-627	LG 482
12339	96-341*	LG 446
12421	396-740*	LG 415
12421	596-319*	LG 415
12421	91-253	LG 415
12421	96-319*	LG 415
124279	15-372	LG 278
12441	91-253	LG 415
12441	95-085	LG 462
12451	396-740*	LG 415
12451	596-319*	LG 415
12451	96-319*	LG 415
12452	396-764*	LG 537
12452	596-341*	LG 482
12452	96-341*	LG 446
12508	396-740*	LG 415
12508	596-319*	LG 415
12508	96-319*	LG 415
12509	396-764*	LG 537
12509	596-341*	LG 482
12509	96-341*	LG 446
1300A	15-373	LG 278
1324	92-149	LG 392
1324	95-085	LG 462
13368	396-740*	LG 415
13368	596-319*	LG 415
13368	96-319*	LG 415
1352	91-714	LG 543
1352	95-085	LG 462
13867	491-530	LG 416
13867	496-399*	LG 416
13869	396-740*	LG 415
13869	596-319*	LG 415
13869	96-319*	LG 415
13870	396-740*	LG 415
13870	596-319*	LG 415
13870	96-319*	LG 415
13871	396-764*	LG 537
13871	596-341*	LG 482
13871	96-341*	LG 446
13918	491-530	LG 416
13918	496-399*	LG 416
13919	590-669*	LG 420
13919	90-669*	LG 420
13919	91-146	LG 419
13920	596-303*	LG 416
13920	91-167	LG 416
13920	96-303*	LG 416
13921	396-740*	LG 415
13921	596-319*	LG 415
13921	96-319*	LG 415
13922	396-740*	LG 415
13922	596-319*	LG 415
13922	91-253	LG 415
13922	96-319*	LG 415
13923	396-764*	LG 537
13923	596-341*	LG 482
13923	91-627	LG 482
13923	96-341*	LG 446
13925	595-601*	LG 400
13925	95-047	LG 378
13925	95-601*	LG 423
13926	596-900*	LG 380
13926	95-086	LG 425
13926	96-900*	LG 526
13932	595-601*	LG 400
13932	95-047	LG 378
13932	95-601*	LG 423
13933	595-601*	LG 400
13933	95-601*	LG 423
13938	596-303*	LG 416
13938	91-167	LG 416
13938	96-303*	LG 416
13939	596-303*	LG 416
13939	91-500	LG 416
13939	96-303*	LG 416
13940	596-303*	LG 416
13940	91-500	LG 416
13940	96-303*	LG 416
13942	596-303*	LG 416
13942	96-303*	LG 416
13943	491-530	LG 416
13943	496-399*	LG 416
13944	496-399*	LG 416
13945	496-399*	LG 416
13947	496-399*	LG 416
13948	590-669*	LG 420
13948	90-669*	LG 420
13949	590-669*	LG 420
13949	90-669*	LG 420
13950	590-669*	LG 420
13950	90-669*	LG 420
13952	590-669*	LG 420
13952	90-669*	LG 420
13955	590-669*	LG 420
13955	90-669*	LG 420
13956	396-740*	LG 415
13956	596-319*	LG 415
13956	91-253	LG 415
13956	96-319*	LG 415
13957	396-740*	LG 415
13957	596-319*	LG 415
13957	96-319*	LG 415
13958	396-740*	LG 415
13958	596-319*	LG 415
13958	96-319*	LG 415
13960	396-740*	LG 415
13960	596-319*	LG 415
13960	96-319*	LG 415
13961	396-764*	LG 537
13961	596-341*	LG 482
13961	91-627	LG 482
13961	96-341*	LG 446
13962	396-764*	LG 537
13962	596-341*	LG 482
13962	96-341*	LG 446
13963	396-764*	LG 537
13963	596-341*	LG 482
13963	96-341*	LG 446
13998	396-764*	LG 537
13998	596-341*	LG 482
13998	96-341*	LG 446
1588100	72-725	LG 1044
1611	15-386	LG 278
1636451	91-714	LG 543
1636451	95-085	LG 462
1657589	91-714	LG 543
1657589	95-085	LG 462
1671593	91-714	LG 543
1671593	95-085	LG 462
1684	15-374	LG 278
1685172	91-714	LG 543
1685172	95-085	LG 462
1701	45-225	LG 232
17080	72-725	LG 1044
1714	15-375	LG 278
17279	491-530	LG 416
17279	496-399*	LG 416
17280	496-399*	LG 416
17281	496-399*	LG 416
174-7640	95-085	LG 462
174-8302	91-714	LG 543
174-8302	95-085	LG 462
1751	34-009	LG 821
1751	34-010	LG 831
177-2335	95-085	LG 462
1860	15-376	LG 278
1893	95-085	LG 462
18931	91-253	LG 415
18931	95-085	LG 462
2483	96-631*	LG 428
2484	96-631*	LG 428
4008	33-330	LG 729
4008	33-331	LG 730
4124	33-331	LG 730
4197	33-386	LG 942
420463	95-076	LG 404
420463	95-615*	LG 426
421825	95-076	LG 404
421825	95-615*	LG 426
4242	33-028	LG 947
430538	33-386	LG 942
430686	33-028	LG 947
510417801	595-085*	LG 462
510417801	95-085	LG 462
510417901	195-048	LG 430
510417901	596-900*	LG 380
510417901	96-900*	LG 526
522829301	396-727*	LG 467
522829301	596-347*	LG 448
522829301	96-347*	LG 387
522936601	396-727*	LG 467
522936601	596-347*	LG 448
522936601	96-347*	LG 387
532106712	595-621*	LG 467
532106712	95-057	LG 380
532106712	95-621*	LG 402
532134149	195-019	LG 466
532134149	596-900*	LG 380
532134149	96-900*	LG 526
532138971	195-032	LG 425
532138971	596-900*	LG 380
532138971	96-900*	LG 526
532180054	195-062	LG 376
532180054	596-615*	LG 529
532180054	96-615*	LG 461
532187756	195-072	LG 530
532187756	595-605*	LG 422
532187756	95-605*	LG 463
532405380	195-070	LG 469
532405380	596-370*	LG 427
532405380	96-370*	LG 533
532419274	595-807*	LG 382
532420463	95-076	LG 404
532420463	95-615*	LG 426
532421825	95-076	LG 404
532421825	95-615*	LG 426
532437601	95-076	LG 404
532437601	95-615*	LG 426
539100340	396-735*	LG 452
539100340	596-308*	LG 548
539100340	91-620	LG 470
539100340	96-308*	LG 456
539100341	396-726*	LG 391
539100341	596-344*	LG 495
539100341	91-622	LG 536
539100341	96-344*	LG 536
539101080	33-028	LG 947
539105476	396-731*	LG 427
539105711	396-727*	LG 467
539105711	596-347*	LG 448
539105711	95-078	LG 496
539105711	96-347*	LG 387
539105712	396-726*	LG 391
539105712	596-344*	LG 495
539105712	91-256	LG 437
539105712	96-344*	LG 536
539106040	596-310*	LG 447
539106040	96-310*	LG 444
539106040	99-127	LG 375
539109755	396-727*	LG 467
539109755	596-347*	LG 448
539109755	96-347*	LG 387
539112078	595-088*	LG 458
539112078	95-084	LG 494
539112078	95-088*	LG 458
539113425	595-087*	LG 417
539113425	95-087	LG 460
539113948	91-146	LG 419
539115245	91-714	LG 543
539115245	95-085	LG 462
539115279	45-225	LG 232
539115774	33-331	LG 730
539115788	33-331	LG 730
539115802	33-028	LG 947
539116200	15-386	LG 278
539117174	590-669*	LG 420
539117174	90-669*	LG 420
539117174	91-146	LG 419
539117973	595-085*	LG 462
539117973	95-085	LG 462
539118038	596-900*	LG 380
539118038	96-900*	LG 526
539118672	599-133*	LG 422
539118672	96-133*	LG 422
539118673	599-133*	LG 422
539118673	96-133*	LG 422
539118957	396-764*	LG 537
539118957	596-341*	LG 482
539118957	91-627	LG 482
539118957	96-341*	LG 446
539119802	396-764*	LG 537
539119802	596-341*	LG 482
539119802	96-341*	LG 446
539119836	491-530	LG 416
539119836	496-399*	LG 416
539119838	596-303*	LG 416
539119838	91-167	LG 416
539119838	96-303*	LG 416
539119841	396-764*	LG 537
539119841	596-341*	LG 482
539119841	91-627	LG 482
539119841	96-341*	LG 446

X

2019 OEM X-Reference

OEM No.	OREGON	Page
DIXON		
539119842	595-601*	LG 400
539119842	95-047	LG 378
539119842	95-601*	LG 423
539119843	596-900*	LG 380
539119843	95-086	LG 425
539119843	96-900*	LG 526
539119844	96-631*	LG 428
539119845	96-631*	LG 428
539119846	96-631*	LG 428
539119849	595-601*	LG 400
539119849	95-047	LG 378
539119849	95-601*	LG 423
539119852	596-900*	LG 380
539119852	96-900*	LG 526
539119853	596-303*	LG 416
539119853	91-167	LG 416
539119853	96-303*	LG 416
539119860	595-601*	LG 400
539119860	95-601*	LG 423
539119862	496-399*	LG 416
539119863	590-669*	LG 420
539119863	90-669*	LG 420
539119863	91-146	LG 419
539119871	396-740*	LG 415
539119871	596-319*	LG 415
539119871	91-253	LG 415
539119871	96-319*	LG 415
539119876	396-764*	LG 537
539119876	596-341*	LG 482
539119876	91-627	LG 482
539119876	96-341*	LG 446
539119877	396-764*	LG 537
539119877	596-341*	LG 482
539119877	96-341*	LG 446
539119909	396-764*	LG 537
539119909	596-341*	LG 482
539119909	96-341*	LG 446
539125010	33-386	LG 942
539125515	45-295	LG 232
539125582	45-256	LG 224
539126275	596-303*	LG 416
539126275	91-167	LG 416
539126275	96-303*	LG 416
539126431	396-723*	LG 413
539126431	596-323*	LG 453
539126431	91-508	LG 419
539126431	96-323*	LG 477
539127975	91-127	LG 396
539127975	99-615*	LG 552
539127977	592-160*	LG 419
539127977	92-160	LG 395
539128189	96-129*	LG 396
539128711	33-119-1	LG 734
539128819	96-129*	LG 396
539129543	91-500	LG 416
539129683	596-303*	LG 416
539129683	91-167	LG 416
539129683	96-303*	LG 416
539129700	596-303*	LG 416
539129700	91-167	LG 416
539129700	96-303*	LG 416
539129860	99-617*	LG 395
5565	83-010	LG 819
5565	83-400	LG 819
574481301	396-727*	LG 467
574481301	596-347*	LG 448
574481301	96-347*	LG 387
575139201	596-303*	LG 416
575139201	96-303*	LG 416
575265901	95-092	LG 423
575296401	595-087*	LG 417
575296401	95-087	LG 460
580244001	95-615*	LG 426
585587701	95-615*	LG 426
6011	45-295	LG 232
6013	91-167	LG 416
60292	91-126	LG 548
60292	99-617*	LG 395
60293	91-127	LG 396
60293	99-615*	LG 552
60296	592-160*	LG 419
60296	92-160	LG 395
60460	99-617*	LG 395
60461	99-615*	LG 552
60645	96-129*	LG 396
6092	596-303*	LG 416
6092	91-500	LG 416
6092	96-303*	LG 416
6111	15-386	LG 278
61516	33-119-1	LG 734
61656	96-129*	LG 396
61695	96-129*	LG 396
6231	91-500	LG 416
6236	596-303*	LG 416
6236	96-303*	LG 416
6894	96-631*	LG 428
6895	95-085	LG 462
6896	596-303*	LG 416
6896	96-303*	LG 416
6897	590-669*	LG 420
6897	90-669*	LG 420
7100124	72-725	LG 1044
7725	15-388	LG 278
79222	91-127	LG 396
79222	91-128	LG 424
79222	95-085	LG 462
7-9222	91-127	LG 396
7-9222	91-128	LG 424
7-9222	95-085	LG 462
79371	91-127	LG 396
79371	91-128	LG 424
79371	95-085	LG 462
7-9371	91-127	LG 396
7-9371	91-128	LG 424
7-9371	95-085	LG 462
8340	82-340	LG 883
8398	82-341	LG 884
8399	82-342	LG 884
8400	82-340	LG 883
8600	91-167	LG 416
8659	91-167	LG 416
8688	596-303*	LG 416
8688	91-167	LG 416
8688	96-303*	LG 416
917532420463	95-076	LG 404
917532420463	95-615*	LG 426
917532421825	95-076	LG 404
917532421825	95-615*	LG 426
9258	396-723*	LG 413
9258	596-323*	LG 453
9258	91-508	LG 419
9258	96-323*	LG 477
9265	396-723*	LG 413
9265	596-323*	LG 453
9265	91-508	LG 419
9265	96-323*	LG 477
9383	396-740*	LG 415
9383	596-319*	LG 415
9383	91-253	LG 415
9383	95-085	LG 462
9383	96-319*	LG 415
9443	590-669*	LG 420
9443	90-669*	LG 420
9444	590-669*	LG 420
9444	90-669*	LG 420
9444	91-146	LG 419
AM101589	72-725	LG 1044
DIX-1	72-765	LG 1043
DOP33-119-1DI	33-119-1	LG 734
H1667	91-127	LG 396
H1667	91-128	LG 424
H1667	95-085	LG 462
H1708	91-127	LG 396
H1708	91-128	LG 424
H1708	95-085	LG 462
DOLMAR		
010.151.020.0	49-812	LG 612
021.151.180.0	55-342	LG 627
021.151.540.0	49-812	LG 612
108.151.190.0	49-021	LG 629
118.151.210.0	49-833	LG 611
118.151.520.0	49-807	LG 611
119.151.540.7	49-835	LG 611
144.150.030.0	55-333	LG 633
144.150.360.0	49-021	LG 629
375.151.060.0	49-026	LG 769
A6000-260-0000	43-685	LG 936
DR		
151691	596-900*	LG 380
151691	96-900*	LG 526
152871	396-735*	LG 452
152871	596-308*	LG 548
152871	91-620	LG 470
152871	96-308*	LG 456
225381	396-726*	LG 391
225381	596-344*	LG 495
225381	91-622	LG 536
225381	96-344*	LG 536
DURASTEEL		
1609	75-120	LG 300
DYNAMARK		
162313	45-087	LG 243
300575	15-649	LG 309
300680P	75-136	LG 309
300842	75-137	LG 309
301137	45-087	LG 243
301172	80-748	LG 852
301503	46-330	LG 701
302289	15-650	LG 259
303241	15-651	LG 259
305148	15-652	LG 259
306932	96-005	
308701	15-653	LG 310
309069	96-005	
314108P	75-138	LG 310
319596	75-289	LG 863
321205	75-977	LG 310
33125	15-654	LG 309
3526	15-655	LG 309
39831	72-304	LG 1038
39979	45-079	LG 249
40195	45-098	LG 243
44745	33-386	LG 942
45186	15-657	LG 259
48044	75-179	LG 310
49562	45-257	LG 245
49878	15-659	LG 309
52407	45-009	LG 853
52584	72-304	LG 1038
57214P	75-142	LG 310
57299	96-005	
57556	15-660	LG 309
58170	75-143	LG 310
58190	96-005	
76860	96-005	
782966	33-330	LG 729
DYNAMOW		
DM24	96-724*	LG 430
E.T. RUGG		
10858	34-031	LG 821
21101	34-008	LG 821
EATON		
245223	45-259	LG 224
754-0151	75-004	LG 301
754-0935	75-092	LG 304
954-0151	75-004	LG 301
954-0935	75-092	LG 304
ECHO		
102152802	69-171	LG 981
123100-02960	49-816	LG 612
123100-03930	49-812	LG 612
123100-03930	49-816	LG 612
123100-04260	49-816	LG 612
123100-04261	49-816	LG 612
123100-04930	49-816	LG 612
123100-05960	49-816	LG 612
123100-06520	49-816	LG 612
123100-07320	49-816	LG 612
123100-09220	49-816	LG 612
123100-09320	49-816	LG 612
123100-09560	49-816	LG 612
123100-10130	49-816	LG 612
123100-10530	49-816	LG 612
123100-10630	49-834	LG 611
123100-10631	49-834	LG 611
123100-10633	49-834	LG 611
123100-11230	49-816	LG 612
123100-12330	49-832	LG 611
123100-12430	49-834	LG 611
123100-12431	49-834	LG 611
123100-13730	49-832	LG 611
123100-14330	49-832	LG 611
123100-15030	49-816	LG 612
123100-16330	49-816	LG 612
123100-16430	49-834	LG 611
123100-19030	49-832	LG 611
123100-22130	49-816	LG 612
123100-23230	49-816	LG 612
123100-37330	49-816	LG 612
123100-43130	49-816	LG 612
123101-03930	49-812	LG 612
123101-05960	49-812	LG 612
123101-09560	49-812	LG 612
123101-10530	49-812	LG 612
123101-12330	49-806	LG 611
123101-12430	49-810	LG 612
123101-13730	49-835	LG 611
123101-16130	49-835	LG 611
123101-17330	49-835	LG 611
123101-37330	49-812	LG 612
123103-10630	49-810	LG 612
123126-10631	55-342	LG 627
123137-03930	49-021	LG 629
123146-03930	55-334	LG 633
123146-10630	55-333	LG 633
123168-10631	55-343	LG 627
123181-26030	49-026	LG 769
12318139130	07-088	LG 768
123181-39130	07-088	LG 768
123-181-39130	07-088	LG 768
123181-40630	49-020	LG 631
125200-13123	50-620	LG 595
125200-13312	50-619	LG 595
125200-49030	50-619	LG 595
12530042030	49-822-0	LG 616
12538108660	07-084	LG 768
125381-08660	07-084	LG 768
13030508360	55-201	LG 190
130305-08360	55-201	LG 190
13030508361	55-201	LG 190
130310-00000	55-227	LG 191

X

* OREGON® Gator™ replacement blade

OEM No.	OREGON	Page
ECHO		
130310-00760	30-931	LG 191
130310-03360	55-227	LG 191
130-310-0336-0	55-227	LG 191
13031004560	30-003	LG 190
130310-04560	30-003	LG 190
13031004560A	30-003	LG 190
13031004560LW	30-003	LG 190
13031051730	30-009	LG 190
130310-51730	30-009	LG 190
13031051730A	30-009	LG 190
13031051830	30-121	LG 190
13031051830	30-831	LG 190
130310-51830	30-121	LG 190
130310-51830	30-831	LG 190
130-310-51830	30-121	LG 190
13031054130	30-119	LG 191
13031054130	30-830	LG 191
130310-54130	30-119	LG 191
130310-54130	30-830	LG 191
13031700760	30-931	LG 191
130317-00760	30-931	LG 191
13100406320	55-120	LG 770
131004-06320	55-120	LG 770
131004-06320	55-123	LG 770
13100406320A	55-120	LG 770
13100406610	55-008	LG 771
131004-06610	55-008	LG 771
13100406610A	55-008	LG 771
13100440630	55-122	LG 770
13100440930	55-122	LG 770
131004-40930	55-122	LG 770
13100440930A	55-122	LG 770
13100441030	55-122	LG 770
13100448730	55-122	LG 770
131004-48730	55-122	LG 770
13100453530	55-122	LG 770
13100455730	55-122	LG 770
131004-55730	55-122	LG 770
13100455830	55-122	LG 770
131004-55830	55-122	LG 770
13120506530	07-206	LG 776
131205-06530	07-206	LG 776
131205-07320	07-206	LG 776
13120507321	07-206	LG 776
13130040630	55-157	LG 763
131300-40630	07-007	LG 689
13130056430	55-157	LG 763
131300-56430	55-157	LG 763
13130056430A	55-157	LG 763
13130056431	55-157	LG 763
13160002260A	55-008	LG 771
131600-03360	07-011	LG 763
13160009860	55-008	LG 771
131600-09860	55-008	LG 771
13160009861	55-008	LG 771
131600-09861	55-008	LG 771
131600-22130	55-110	LG 765
132007-04920	07-010	LG 764
132007-07530	07-010	LG 764
13211544330	07-090	LG 764
132115-44330	07-090	LG 764
132115-46730	07-126	LG 764
132115-55930	07-085	LG 764
17500905532	55-252	LG 1019
175009-05532	55-252	LG 1019
17500955931	55-252	LG 1019
177202-44330	31-093	LG 932
177215-43130	31-094	LG 932
177215-44430	55-115	LG 932
177218-40630	31-091	LG 930
177220-42030	43-509	LG 936
17722800760	31-100	LG 929
17722801110	31-100	LG 929
177228-01110	31-100	LG 929
17801052130	55-116	LG 1018
178010-52130	55-116	LG 1018
215407	55-807	LG 994
215603	15-302	LG 271
215603	55-302-1	LG 992
226000031	30-439-1	LG 190
30	55-157	LG 763
356000030	55-157	LG 763
43301402830	56-004	LG 686
433014-02830	56-004	LG 686
43301611031	56-004	LG 686
433016-11031	56-004	LG 686
43301912330	04-008	LG 686
448730	55-122	LG 770
508361	55-201	LG 190
69601552631	40-141	LG 585
69601552632	40-140	LG 584
69601553630	40-147	LG 588
720237001	40-140	LG 584
74184566145	55-157	LG 763
9860	55-008	LG 771
9861	55-008	LG 771
99999999999	30-003	LG 190
99999999999	55-122	LG 770
A02100380	50-621	LG 595
A226000031	30-439-1	LG 190
A226000032	30-439-1	LG 190
A226001410	30-119	LG 191
A356000030	55-157	LG 763
A356000031	55-157	LG 763
AM105998	55-122	LG 770
AM115397	55-252	LG 1019
PT10281	55-227	LG 191
PT8376	30-931	LG 191
EFCO		
2318-139	49-026	LG 769
2318-283	49-816	LG 612
2318-285	49-816	LG 612
2318-303	49-816	LG 612
2318-308	49-812	LG 612
2318-353	49-816	LG 612
2318-441	49-816	LG 612
2318-450	49-816	LG 612
ELECTROLEUX		
100011	55-333	LG 633
123625	49-812	LG 612
123626	49-816	LG 612
123627	49-816	LG 612
123627	49-831	LG 612
123629	49-816	LG 612
123633	49-812	LG 612
123634	49-816	LG 612
123639	49-816	LG 612
123640	49-812	LG 612
364400	55-342	LG 627
364500	55-343	LG 627
430755	49-021	LG 629
474626	49-834	LG 611
475152	49-812	LG 612
475568	49-816	LG 612
475569	49-834	LG 611
475570	49-816	LG 612
501-4667-01	49-021	LG 629
501-6661-01	55-342	LG 627
501-6684-01	49-816	LG 612
501-6971-01	49-814	LG 614
501-8834-01	49-816	LG 612
502-1035-01	49-812	LG 612
502-1831-01	49-020	LG 631
503-0818-01	55-334	LG 633
503-1170-01	49-021	LG 629
503-5742-01	55-333	LG 633
504-1000-11	55-333	LG 633
504-3645-00	55-343	LG 627
505-3167-31	55-342	LG 627
505-5201-30	49-816	LG 612
505-5201-31	49-812	LG 612
507123625	49-812	LG 612
507123626	49-816	LG 612
507123627	49-816	LG 612
507123627	49-831	LG 612
507123633	49-812	LG 612
507123634	49-816	LG 612
507123639	49-816	LG 612
507123640	49-812	LG 612
507432582	55-342	LG 627
507474626	49-834	LG 611
507475152	49-812	LG 612
507475568	49-816	LG 612
507475569	49-834	LG 611
507475570	49-816	LG 612
507520130	49-816	LG 612
507520131	49-812	LG 612
507-6667-01	55-342	LG 627
520107	49-021	LG 629
520130	49-816	LG 612
520131	49-812	LG 612
530035162	55-333	LG 633
531-0024-38	49-020	LG 631
935-00119	49-812	LG 612
EMAK		
2318.139	49-026	LG 769
2318.283	49-816	LG 612
2318.285	49-816	LG 612
2318.303	49-816	LG 612
2318.308	49-812	LG 612
2318.353	49-816	LG 612
2318.441	49-812	LG 612
2318.442	49-816	LG 612
2318.45	49-816	LG 612
2318.450	49-816	LG 612
2318.547	49-831	LG 612
33.00203	49-021	LG 629
33.00225	49-816	LG 612
33.01037	49-816	LG 612
33-00224	49-812	LG 612
33-00240	55-342	LG 627
33-00869	49-812	LG 612
350.00152	49-021	LG 629
350.00168	55-343	LG 627
740-00150	49-831	LG 612
935.0012	49-816	LG 612
935.00120	49-816	LG 612
946-00209	49-831	LG 612
946-00210	49-812	LG 612
950.00139	55-342	LG 627
950-00161	49-835	LG 611
ENCORE		
100353	04-125	LG 694
253027	40-703	LG 590
362005	48-202	LG 694
362063	48-148	LG 695
363006	09-804	LG 233
363007	45-030	LG 245
363007	45-127	LG 244
363007	48-320	LG 238
363012	45-060	LG 234
363058	82-305	LG 908
363119	78-651	LG 835
363137	78-673	LG 839
363146	45-220	LG 232
363170	48-141	LG 249
363187	45-031	LG 232
363191	78-680	LG 840
363211	75-260	LG 312
363212	75-956	LG 278
363216	78-642	LG 841
363217	78-003	LG 839
363257	07-309	LG 772
363264	78-300	LG 833
363291	396-726*	LG 391
363291	596-344*	LG 495
363291	91-622	LG 536
363291	96-344*	LG 536
363312	75-955	LG 278
423014	96-324*	LG 431
423018	15-389	LG 278
423029	91-265	LG 431
423029	96-324*	LG 431
423063	83-010	LG 819
423063	83-400	LG 819
423173	96-324*	LG 431
423210	96-324*	LG 431
453048	83-011	LG 819
453068	27-503	LG 724
453081	45-301	LG 804
481707	396-726*	LG 391
481707	596-344*	LG 495
481707	91-622	LG 536
481707	96-344*	LG 536
482462	396-726*	LG 391
482462	596-344*	LG 495
482462	91-622	LG 536
482462	96-344*	LG 536
483025	78-121	LG 827
483030	75-031	LG 278
483031	75-154	LG 312
483035	91-266	LG 431
483035	96-328*	LG 431
483049	96-328*	LG 431
483050	96-328*	LG 431
483053	15-390	LG 278
523025	33-185	LG 737
523034	33-028	LG 947
523349	15-394	LG 278
523366	15-395	LG 278
523370	33-127	LG 737
523370	33-185	LG 737
543293	396-322*	LG 438
543293	596-322*	LG 438
543293	92-030	LG 567
543293	96-322*	LG 567
543294	392-025*	LG 440
543294	596-749*	LG 433
543294	92-031	LG 433
543294	96-749*	LG 433
583287	93-025	LG 482
603035	591-259*	LG 438
603035	91-259	LG 432
603055	591-259*	LG 438
603056	591-259*	LG 438
604035	591-259*	LG 438
604035	91-259	LG 432
823004	593-601*	LG 386
823004	91-039	LG 487
823004	93-601*	LG 432
823006	396-702*	LG 480
823006	596-702*	LG 388
823006	91-135	LG 387
823006	96-702*	LG 491
ESKA		
8-0011	75-120	LG 300
EVERIDE		
181026	592-608*	LG 434
181026	91-482	LG 434
181042	92-607*	LG 434
191107	92-054	LG 434

X

2019 OEM X-Reference

OEM No.	OREGON	Page
EXCEL		
039677	45-064	LG 236
30866	91-178	LG 471
350595	82-021	LG 884
39677	45-064	LG 236
631560	45-066	LG 236
781039	33-188	LG 738
781310	75-662	LG 258
781385	78-023	LG 822
781443	75-663	LG 279
781856	78-022	LG 827
782292	75-664	LG 279
784207	75-665	LG 279
784504	78-026	LG 822
785030	60-053	LG 708
786103	45-065	LG 236
786657	60-054	LG 708
789388	75-755	LG 258
791335	75-756	LG 279
793802	92-039	LG 470
793828	75-757	LG 256
793893	75-759	LG 279
EXMARK		
089046	91-255	LG 454
103-0064	72-735	LG 1045
103-0065	72-736	LG 1045
103-0068	72-735	LG 1045
103-0069	72-736	LG 1045
103-0070	72-736	LG 1045
103-0071	72-736	LG 1045
103-0301	396-740*	LG 415
103-0301	596-319*	LG 415
103-0301	91-217	LG 558
103-0301	91-311	LG 439
103-0301	96-319*	LG 415
103-0301-B	396-740*	LG 415
103-0301-B	596-319*	LG 415
103-0301-B	91-311	LG 439
103-0301-B	96-319*	LG 415
103-0301-M	396-740*	LG 415
103-0301-M	596-319*	LG 415
103-0301-M	91-311	LG 439
103-0301-M	96-319*	LG 415
103-0301-S	396-740*	LG 415
103-0301-S	596-319*	LG 415
103-0301-S	91-217	LG 558
103-0301-S	91-311	LG 439
103-0301-S	96-319*	LG 415
103-0431	86-033	LG 781
103-0662	33-135	LG 737
103-0664	33-115	LG 738
103-0665	33-135	LG 737
103-0665	33-136	LG 737
103-0690	33-137	LG 737
103-0690	33-153	LG 737
103-0690	33-187	LG 738
103-0881	75-957	LG 282
103-0960	33-137	LG 737
103-0960	33-153	LG 737
103-0960	33-187	LG 738
103-1140	82-344	LG 885
103-1140	82-346	LG 885
103-1183	82-346	LG 885
103-1184	82-346	LG 885
103-1224	72-722	LG 1045
103-1577	396-716*	LG 451
103-1577	596-310*	LG 447
103-1577	96-310*	LG 444
103-1577	99-127	LG 375
103-1577-S	396-716*	LG 451
103-1577-S	596-310*	LG 447
103-1577-S	96-310*	LG 444
103-1577-S	99-127	LG 375
103-1578	396-726*	LG 391
103-1578	596-344*	LG 495
103-1578	91-256	LG 437
103-1578	96-344*	LG 536
103-1578-S	396-726*	LG 391
103-1578-S	596-344*	LG 495
103-1578-S	91-256	LG 437
103-1578-S	96-344*	LG 536
103-1579	596-327*	LG 434
103-1579	96-327*	LG 417
103-1579-S	596-327*	LG 434
103-1579-S	96-327*	LG 417
103-1580	396-740*	LG 415
103-1580	596-319*	LG 415
103-1580	96-319*	LG 415
103-1580-B	396-740*	LG 415
103-1580-B	596-319*	LG 415
103-1580-B	96-319*	LG 415
103-1580-M	396-740*	LG 415
103-1580-M	596-319*	LG 415
103-1580-M	96-319*	LG 415
103-1580-S	396-740*	LG 415
103-1580-S	596-319*	LG 415
103-1580-S	91-217	LG 558
103-1580-S	96-319*	LG 415
103-2171	72-722	LG 1045
103-2240	15-113	LG 282
103-2240	75-113	LG 281
103-2477	82-022	LG 886
103-2507	396-716*	LG 451
103-2507	596-310*	LG 447
103-2507	96-310*	LG 444
103-2508	396-726*	LG 391
103-2508	596-344*	LG 495
103-2508	91-181	LG 495
103-2508	96-344*	LG 536
103-2508-S	396-726*	LG 391
103-2508-S	596-344*	LG 495
103-2508-S	91-181	LG 495
103-2508-S	96-344*	LG 536
103-2509	596-327*	LG 434
103-2509	96-327*	LG 417
103-2509-S	596-327*	LG 434
103-2509-S	96-327*	LG 417
103-2510	396-740*	LG 415
103-2510	596-319*	LG 415
103-2510	91-378	LG 414
103-2510	96-319*	LG 415
103-2510-S	396-740*	LG 415
103-2510-S	596-319*	LG 415
103-2510-S	91-378	LG 414
103-2510-S	96-319*	LG 415
103-2517	396-716*	LG 451
103-2517	596-310*	LG 447
103-2517	91-368	LG 460
103-2517	96-310*	LG 444
103-2518	396-726*	LG 391
103-2518	596-344*	LG 495
103-2518	91-335	LG 420
103-2518	96-344*	LG 536
103-2518-S	91-181	LG 495
103-2518-S	91-256	LG 437
103-2518-S	91-312	LG 478
103-2519	596-327*	LG 434
103-2519	91-373	LG 383
103-2519	96-327*	LG 417
103-2519-S	596-327*	LG 434
103-2519-S	91-373	LG 383
103-2519-S	96-327*	LG 417
103-2527	396-716*	LG 451
103-2527	596-310*	LG 447
103-2527	91-313	LG 494
103-2527	96-310*	LG 444
103-2528	396-726*	LG 391
103-2528	596-344*	LG 495
103-2528	91-312	LG 478
103-2528	96-344*	LG 536
103-2529	596-327*	LG 434
103-2529	91-369	LG 434
103-2529	96-327*	LG 417
103-2529-S	596-327*	LG 434
103-2529-S	91-369	LG 434
103-2529-S	96-327*	LG 417
103-2530	396-740*	LG 415
103-2530	596-319*	LG 415
103-2530	91-217	LG 558
103-2530	91-264	LG 473
103-2530	96-319*	LG 415
103-2530-B	396-740*	LG 415
103-2530-B	596-319*	LG 415
103-2530-B	91-264	LG 473
103-2530-B	96-319*	LG 415
103-2530-M	396-740*	LG 415
103-2530-M	596-319*	LG 415
103-2530-M	91-264	LG 473
103-2530-M	96-319*	LG 415
103-2530-S	396-740*	LG 415
103-2530-S	596-319*	LG 415
103-2530-S	91-217	LG 558
103-2530-S	91-264	LG 473
103-2530-S	96-319*	LG 415
103-2531	91-374	LG 442
103-2531	96-699*	LG 442
103-2531-B	91-374	LG 442
103-2531-B	96-699*	LG 442
103-2531-M	91-374	LG 442
103-2531-M	96-699*	LG 442
103-2531-S	91-374	LG 442
103-2531-S	96-699*	LG 442
103-2533	82-022	LG 886
103-2547	82-022	LG 886
103-2548	82-022	LG 886
103283	91-181	LG 495
103-3037	48-235	LG 886
103-3168	72-051	LG 1039
103-3200	82-347	LG 885
103-3200	82-348	LG 885
103-3206	82-347	LG 885
103-3206	82-348	LG 885
103-3229	91-170	LG 437
103-3231	396-739*	LG 479
103-3231	91-217	LG 558
103-3231	91-264	LG 473
103-3231	94-072	LG 568
103-3232	91-217	LG 558
103-3232	91-264	LG 473
103-3232-S	91-217	LG 558
103-3232-S	91-264	LG 473
103-3233	396-739*	LG 479
103-3233	91-188	LG 439
103-3233-S	396-739*	LG 479
103-3233-S	91-188	LG 439
103-3246	33-157	LG 738
103-3785	72-735	LG 1045
103-3799	72-736	LG 1045
103-3808	30-025	LG 208
103-383-S	92-025	LG 440
103-383-S	92-031	LG 433
103-4014	115-204	LG 282
103-4051	72-050	LG 1039
103-4051	72-164	LG 1040
103-4207	92-168	LG 572
103-4208	92-167	LG 443
103-4210	92-921	LG 441
103-4689	72-722	LG 1045
103-4760	75-235	LG 281
103-4760	75-667	LG 282
103-4761	15-114	LG 282
103-5179	72-736	LG 1045
103-5188	72-736	LG 1045
103-5189	72-735	LG 1045
103-5218	91-181	LG 495
103-5218-S	91-181	LG 495
103-5221	33-002	LG 946
103-5362	72-735	LG 1045
103-5589	75-917	LG 282
103-5598	15-398	LG 282
103-6335	596-327*	LG 434
103-6335	96-327*	LG 417
103-6335-S	596-327*	LG 434
103-6335-S	96-327*	LG 417
103-6336	396-716*	LG 451
103-6336	596-310*	LG 447
103-6336	96-310*	LG 444
103-6336-S	396-716*	LG 451
103-6336-S	596-310*	LG 447
103-6336-S	96-310*	LG 444
103-6337	91-181	LG 495
103-6337-S	396-726*	LG 391
103-6337-S	596-344*	LG 495
103-6337-S	96-344*	LG 536
103-6338-S	91-217	LG 558
103-6338-S	91-264	LG 473
103-6339	96-699*	LG 442
103-6339-S	96-699*	LG 442
103-6381	396-321*	LG 562
103-6381	596-321*	LG 562
103-6381	96-321*	LG 436
103-6381-S	396-321*	LG 562
103-6381-S	596-321*	LG 562
103-6381-S	96-321*	LG 436
103-6382	396-322*	LG 438
103-6382	596-322*	LG 438
103-6382	96-322*	LG 567
103-6382-S	396-322*	LG 438
103-6382-S	596-322*	LG 438
103-6382-S	96-322*	LG 567
103-6383	392-025*	LG 440
103-6383	596-749*	LG 433
103-6383	92-025	LG 440
103-6383	96-749*	LG 433
103-6383-S	392-025*	LG 440
103-6383-S	596-749*	LG 433
103-6383-S	92-025	LG 440
103-6383-S	96-749*	LG 433
103-6384	392-057*	LG 443
103-6384	592-033*	LG 443
103-6384	92-057	LG 442
103-6384-S	392-057*	LG 443
103-6384-S	592-033*	LG 443
103-6384-S	92-057	LG 442
103-6386-S	92-919	LG 435
103-6387	396-322*	LG 438
103-6387	596-322*	LG 438
103-6387	96-322*	LG 567
103-6387-S	396-322*	LG 438
103-6387-S	596-322*	LG 438
103-6387-S	96-322*	LG 567
103-6388	392-025*	LG 440
103-6388	596-749*	LG 433
103-6388	92-082	LG 433
103-6388	96-749*	LG 433
103-6388-S	392-025*	LG 440
103-6388-S	596-749*	LG 433
103-6388-S	92-082	LG 433
103-6388-S	96-749*	LG 433
103-6389	44-501	LG 836
103-6390	596-327*	LG 434
103-6390	91-373	LG 383
103-6390	96-327*	LG 417
103-6390-S	596-327*	LG 434
103-6390-S	91-373	LG 383
103-6390-S	96-327*	LG 417
103-6391	396-321*	LG 562
103-6391	596-321*	LG 562
103-6391	92-026	LG 435

X

* OREGON® Gator™ replacement blade

EXMARK

OEM No.	OREGON	Page
103-6391	96-321*	LG 436
103-6391-S	396-321*	LG 562
103-6391-S	596-321*	LG 562
103-6391-S	92-026	LG 435
103-6391-S	96-321*	LG 436
103-6392	396-322*	LG 438
103-6392	596-322*	LG 438
103-6392	92-027	LG 432
103-6392	96-322*	LG 567
103-6392-S	396-322*	LG 438
103-6392-S	596-322*	LG 438
103-6392-S	92-027	LG 432
103-6392-S	96-322*	LG 567
103-6393	392-025*	LG 440
103-6393	596-749*	LG 433
103-6393	92-028	LG 433
103-6393	96-749*	LG 433
103-6393-S	392-025*	LG 440
103-6393-S	596-749*	LG 433
103-6393-S	92-028	LG 433
103-6393-S	96-749*	LG 433
103-6394	392-057*	LG 443
103-6394	592-033*	LG 443
103-6394	92-084	LG 442
103-6394-S	392-057*	LG 443
103-6394-S	592-033*	LG 443
103-6394-S	92-084	LG 442
103-6396	396-321*	LG 562
103-6396	596-321*	LG 562
103-6396	96-321*	LG 436
103-6396-S	396-321*	LG 562
103-6396-S	596-321*	LG 562
103-6396-S	96-321*	LG 436
103-6397	396-322*	LG 438
103-6397	596-322*	LG 438
103-6397	96-322*	LG 567
103-6397-S	396-322*	LG 438
103-6397-S	596-322*	LG 438
103-6397-S	96-322*	LG 567
103-6398	392-025*	LG 440
103-6398	596-749*	LG 433
103-6398	96-749*	LG 433
103-6398-S	392-025*	LG 440
103-6398-S	596-749*	LG 433
103-6398-S	96-749*	LG 433
103-6399	392-057*	LG 443
103-6399	592-033*	LG 443
103-6399-S	392-057*	LG 443
103-6399-S	592-033*	LG 443
103-6400-S	91-369	LG 434
103-6401	396-321*	LG 562
103-6401	396-716*	LG 451
103-6401	596-310*	LG 447
103-6401	596-321*	LG 562
103-6401	92-029	LG 435
103-6401	96-310*	LG 444
103-6401	96-321*	LG 436
103-6401-S	396-321*	LG 562
103-6401-S	396-716*	LG 451
103-6401-S	596-310*	LG 447
103-6401-S	596-321*	LG 562
103-6401-S	92-029	LG 435
103-6401-S	96-310*	LG 444
103-6401-S	96-321*	LG 436
103-6402	396-322*	LG 438
103-6402	596-322*	LG 438
103-6402	92-030	LG 567
103-6402	96-322*	LG 567
103-6402-S	396-322*	LG 438
103-6402-S	596-322*	LG 438
103-6402-S	92-030	LG 567
103-6402-S	96-322*	LG 567
103-6403	392-025*	LG 440
103-6403	596-749*	LG 433
103-6403	92-031	LG 433
103-6403	96-749*	LG 433
103-6403-S	392-025*	LG 440
103-6403-S	596-749*	LG 433
103-6403-S	92-031	LG 433
103-6403-S	96-749*	LG 433
103-6404	392-057*	LG 443
103-6404	592-033*	LG 443
103-6404	92-033	LG 442
103-6404-S	392-057*	LG 443
103-6404-S	592-033*	LG 443
103-6404-S	92-033	LG 442
103-6461	92-912	LG 436
103-6506	15-004	LG 282
103-6518	91-313	LG 494
103-6579	33-157	LG 738
103-6580	396-726*	LG 391
103-6580	596-344*	LG 495
103-6580	96-344*	LG 536
103-6580-S	396-726*	LG 391
103-6580-S	596-344*	LG 495
103-6580-S	96-344*	LG 536
1036581	91-368	LG 460
103-6581	396-716*	LG 451
103-6581	596-310*	LG 447
103-6581	91-368	LG 460
103-6581	96-310*	LG 444
103-6581-S	396-716*	LG 451
103-6581-S	596-310*	LG 447
103-6581-S	91-368	LG 460
103-6581-S	96-310*	LG 444
103-6582	396-726*	LG 391
103-6582	596-344*	LG 495
103-6582	91-335	LG 420
103-6582	96-344*	LG 536
103-6582-B	396-726*	LG 391
103-6582-B	596-344*	LG 495
103-6582-B	91-335	LG 420
103-6582-B	96-344*	LG 536
103-6582-M	396-726*	LG 391
103-6582-M	596-344*	LG 495
103-6582-M	91-335	LG 420
103-6582-M	96-344*	LG 536
103-6582-S	396-726*	LG 391
103-6582-S	596-344*	LG 495
103-6582-S	91-335	LG 420
103-6582-S	96-344*	LG 536
103-6583	396-716*	LG 451
103-6583	596-310*	LG 447
103-6583	91-313	LG 494
103-6583	96-310*	LG 444
103-6583-S	396-716*	LG 451
103-6583-S	596-310*	LG 447
103-6583-S	91-313	LG 494
103-6583-S	96-310*	LG 444
103-6584	396-726*	LG 391
103-6584	596-344*	LG 495
103-6584	91-312	LG 478
103-6584	96-344*	LG 536
103-6584-B	396-726*	LG 391
103-6584-B	596-344*	LG 495
103-6584-B	91-312	LG 478
103-6584-B	96-344*	LG 536
103-6584-M	396-726*	LG 391
103-6584-M	596-344*	LG 495
103-6584-M	91-312	LG 478
103-6584-M	96-344*	LG 536
103-6584-S	396-726*	LG 391
103-6584-S	596-344*	LG 495
103-6584-S	91-312	LG 478
103-6584-S	96-344*	LG 536
103-6738	396-716*	LG 451
103-6738	596-310*	LG 447
103-6738	96-310*	LG 444
103-6738-S	396-716*	LG 451
103-6738-S	596-310*	LG 447
103-6738-S	96-310*	LG 444
103-6906	15-399	LG 282
103-6906-S	15-399	LG 282
103-7263	72-050	LG 1039
103-7263	72-164	LG 1040
103-7363	72-050	LG 1039
103-8075	82-347	LG 885
103-8075	82-348	LG 885
103-8107	392-201*	LG 440
103-8107-S	392-201*	LG 440
103-8239	392-201*	LG 440
103-8239-S	392-201*	LG 440
103-8240	392-201*	LG 440
103-8240-S	392-201*	LG 440
103-8244	392-201*	LG 440
103-8244	492-730	LG 440
103-8244-S	392-201*	LG 440
103-8244-S	492-730	LG 440
103-8250	392-205*	LG 436
103-8250-S	392-205*	LG 436
103-8251	392-205*	LG 436
103-8251-S	392-205*	LG 436
103-8280	82-022	LG 886
103-8288	392-205*	LG 436
103-8288-S	392-205*	LG 436
103-8296	392-205*	LG 436
103-8296-S	392-205*	LG 436
103-8323	82-347	LG 885
103-8323	82-348	LG 885
103-8353	82-022	LG 886
103-8370	392-205*	LG 436
103-8370	492-726	LG 436
103-8370-S	392-205*	LG 436
103-8370-S	492-726	LG 436
103-8396	392-201*	LG 440
103-8396-S	392-201*	LG 440
103-8415	72-020	LG 1039
103-8420	392-205*	LG 436
103-8420-S	392-205*	LG 436
103-8431	392-201*	LG 440
103-8431-S	392-201*	LG 440
103-8432	392-201*	LG 440
103-8432	492-730	LG 440
103-8432-S	392-201*	LG 440
103-8432-S	492-730	LG 440
103-8433	392-205*	LG 436
103-8433-S	392-205*	LG 436
103-9395-S	392-204*	LG 443
103-9539	82-056	LG 886
103-9599	392-206*	LG 436
103-9599-S	392-206*	LG 436
103-960	33-137	LG 737
103-960	33-153	LG 737
103-960	33-187	LG 738
103-9600-S	392-206*	LG 436
103-9601	392-206*	LG 436
103-9601	492-731	LG 436
103-9601-S	392-206*	LG 436
103-9601-S	492-731	LG 436
103-9605	392-206*	LG 436
103-9605	492-731	LG 436
103-9605-S	392-206*	LG 436
103-9605-S	492-731	LG 436
103-9610-S	392-206*	LG 436
103-9612-S	392-203*	LG 442
103-9613-S	392-204*	LG 443
103-9614-S	392-205*	LG 436
103-9615-S	392-206*	LG 436
103-9616	392-203*	LG 442
103-9616-S	392-203*	LG 442
103-9618	392-203*	LG 442
103-9618	492-732	LG 442
103-9618-S	392-203*	LG 442
103-9618-S	492-732	LG 442
103-9619	392-203*	LG 442
103-9619-S	392-203*	LG 442
103-9620	392-203*	LG 442
103-9620	492-732	LG 442
103-9620-S	392-203*	LG 442
103-9620-S	492-732	LG 442
103-9621	392-203*	LG 442
103-9621-S	392-203*	LG 442
103-9622	392-204*	LG 443
103-9622-S	392-204*	LG 443
103-9624	392-204*	LG 443
103-9624-S	392-204*	LG 443
103-9625	392-204*	LG 443
103-9625-S	392-204*	LG 443
103-9626	392-204*	LG 443
103-9626-S	392-204*	LG 443
103-9629	492-730	LG 440
103-9629-S	392-201*	LG 440
103-9630	392-203*	LG 442
103-9630-S	392-203*	LG 442
103-9631	392-204*	LG 443
103-9631-S	392-204*	LG 443
103-9818-S	392-203*	LG 442
103-9818-S	492-732	LG 442
107-4276	94-017	LG 441
107-4276-S	94-017	LG 441
108-0954	96-660*	LG 441
108-0954-03	96-660*	LG 441
108-0954-S	96-660*	LG 441
108-3762-03	94-051	LG 570
108-3762-03	96-660*	LG 441
108-3762-03P	94-051	LG 570
108-3762-03P	96-660*	LG 441
108-3762-S	94-051	LG 570
108-3762-S	96-660*	LG 441
109-0071	83-010	LG 819
109-0071	83-400	LG 819
109-0776	75-967	LG 258
109-0914	44-504	LG 836
109-0929	44-503	LG 836
109-1023	44-506	LG 836
109-2098	72-050	LG 1039
109-2098	72-164	LG 1040
109-2102	82-361	LG 887
109-2180	44-501	LG 836
109-2339	48-236	LG 724
109-2584	75-186	LG 281
109-2916	33-137	LG 737
109-2916	33-153	LG 737
109-2916	33-187	LG 738
109-4180	83-010	LG 819
109-4180	83-400	LG 819
109-4994	15-115	LG 282
109-5364	15-005	LG 282
109-5396	392-201*	LG 440
109-5396-S	392-201*	LG 440
109-5876	392-206*	LG 436
109-5876-S	33-137	LG 737
109-5876-S	33-153	LG 737
109-5876-S	33-187	LG 738
109-5876-S	392-206*	LG 436
109-5878	392-203*	LG 442
109-5878-S	392-203*	LG 442
109-5879	392-204*	LG 443
109-5879-S	392-204*	LG 443
109-6389	396-716*	LG 451
109-6389	596-310*	LG 447
109-6389	96-310*	LG 444
109-6389-S	396-716*	LG 451
109-6389-S	596-310*	LG 447
109-6389-S	96-310*	LG 444
109-6391	396-716*	LG 451
109-6391	596-310*	LG 447
109-6391	96-310*	LG 444
109-6391-S	396-716*	LG 451

X

* OREGON® Gator™ replacement blade

2019 OEM X-Reference

OEM No.	OREGON	Page
EXMARK		
109-6391-S	596-310*	LG 447
109-6391-S	96-310*	LG 444
109-6460	392-205*	LG 436
109-6460-S	392-205*	LG 436
109-6461-S	392-206*	LG 436
109-6461-S	492-731	LG 436
109-6462-S	92-913	LG 438
109-6463	392-201*	LG 440
109-6463	492-730	LG 440
109-6463-S	392-201*	LG 440
109-6463-S	492-730	LG 440
109-6464	392-203*	LG 442
109-6464	492-732	LG 442
109-6464-S	392-203*	LG 442
109-6464-S	492-732	LG 442
109-6465	392-204*	LG 443
109-6465-S	392-204*	LG 443
109-6465-S	92-910	LG 443
109-6466	392-201*	LG 440
109-6466	392-203*	LG 442
109-6466	392-205*	LG 436
109-6466-S	392-201*	LG 440
109-6466-S	392-203*	LG 442
109-6466-S	392-205*	LG 436
109-6467	392-206*	LG 436
109-6467-S	392-206*	LG 436
109-6471	392-204*	LG 443
109-6471-S	392-204*	LG 443
109-6873	396-322*	LG 438
109-6873	596-322*	LG 438
109-6873	92-030	LG 567
109-6873	96-322*	LG 567
109-6917	82-055	LG 887
109-7665	33-157	LG 738
109-7673	33-157	LG 738
109-8070	15-116	LG 283
109-8073	15-117	LG 283
109-8666	44-505	LG 836
109-9011	72-050	LG 1039
109-9126	72-735	LG 1045
109-9127	72-736	LG 1045
109-927	33-156	LG 738
109-9275	33-156	LG 738
109-9276	33-137	LG 737
109-9276	33-153	LG 737
109-9276	33-187	LG 738
109-9390	392-205*	LG 436
109-9390-S	392-205*	LG 436
109-9391-S	392-206*	LG 436
109-9393	492-730	LG 440
109-9393-S	392-201*	LG 440
109-9394-S	392-203*	LG 442
109-9395-S	96-699*	LG 442
109-9511	44-502	LG 836
110-6568-03	596-362*	LG 441
110-6568-03	94-069	LG 441
110-6568-03	96-362*	LG 570
115-2454-03	396-803*	LG 438
115-2454-03	94-060*	LG 438
115-2454-03	96-803*	LG 567
115-5059-03	594-078*	LG 564
115-5059-03	94-128	LG 564
116-0027	48-232	LG 724
116-0185	44-505	LG 836
116-1611	33-157	LG 738
116-1953	15-118	LG 283
116-3455	15-119	LG 283
116-4500	96-810*	LG 439
116-4500-03	96-810*	LG 439
116-4500-S	96-810*	LG 439
116-4667	78-011	LG 827
116-5171	392-057*	LG 443
116-5171	592-033*	LG 443
116-5171	596-327*	LG 434
116-5171	96-327*	LG 417
116-5171-S	392-057*	LG 443
116-5171-S	592-033*	LG 443
116-5171-S	596-327*	LG 434
116-5171-S	96-327*	LG 417
116-5172	96-699*	LG 442
116-5172-S	96-699*	LG 442
116-5173-S	91-217	LG 558
116-5173-S	91-264	LG 473
116-5174	392-025*	LG 440
116-5174	596-749*	LG 433
116-5174	96-749*	LG 433
116-5174-S	392-025*	LG 440
116-5174-S	596-749*	LG 433
116-5174-S	96-749*	LG 433
116-5175	396-322*	LG 438
116-5175	596-322*	LG 438
116-5175	96-322*	LG 567
116-5175-S	396-322*	LG 438
116-5175-S	596-322*	LG 438
116-5175-S	96-322*	LG 567
116-5176	396-322*	LG 438
116-5176	596-322*	LG 438
116-5176	91-181	LG 495
116-5176	96-322*	LG 567
116-5176-S	396-322*	LG 438
116-5176-S	396-726*	LG 391
116-5176-S	596-322*	LG 438
116-5176-S	596-344*	LG 495
116-5176-S	96-322*	LG 567
116-5176-S	96-344*	LG 536
116-5177	396-321*	LG 562
116-5177	596-321*	LG 562
116-5177	96-321*	LG 436
116-5177-S	396-321*	LG 562
116-5177-S	596-321*	LG 562
116-5177-S	96-321*	LG 436
116-5178	396-716*	LG 451
116-5178	596-310*	LG 447
116-5178	96-310*	LG 444
116-5178-S	396-716*	LG 451
116-5178-S	596-310*	LG 447
116-5178-S	96-310*	LG 444
116-5494	392-201*	LG 440
116-5496-S	392-205*	LG 436
116-5497-S	392-206*	LG 436
116-5499	392-201*	LG 440
116-5499-S	392-201*	LG 440
116-5500-S	392-203*	LG 442
116-5501	392-204*	LG 443
116-5501-S	392-204*	LG 443
116-6358	594-601*	LG 434
116-6358-03	594-601*	LG 434
116-6358-S	594-601*	LG 434
116-6893	15-427	LG 282
116-7437	15-427	LG 282
116-8181	392-025*	LG 440
116-8181	596-749*	LG 433
116-8181	96-749*	LG 433
116-8181-S	392-025*	LG 440
116-8181-S	596-749*	LG 433
116-8181-S	96-749*	LG 433
116-8196	392-025*	LG 440
116-8196	596-749*	LG 433
116-8196	96-749*	LG 433
116-8196-S	392-025*	LG 440
116-8196-S	596-749*	LG 433
116-8196-S	96-749*	LG 433
116-8502	92-033	LG 442
116-8503	592-033*	LG 443
116-9981	72-050	LG 1039
116-9981	72-164	LG 1040
117-1197	33-334	LG 730
117-1197	33-335	LG 730
117-1197	33-336	LG 730
117-5299	34-210	LG 834
117-5372-03	596-362*	LG 441
117-5372-03	94-069	LG 441
117-5372-03	96-362*	LG 570
119-8819	15-142	LG 323
119-8820	15-143	LG 323
121-4894	89-001	LG 590
1-230-237	45-031	LG 232
1-302013	43-075	
1-302030	82-306	LG 874
1-302113-10	43-075	
1-302122	48-200	LG 694
130-2861	92-168	LG 572
1-303028	78-031	LG 826
1-303044	09-804	LG 233
1-303044	45-030	LG 245
1-303044	45-127	LG 244
1-303057	45-220	LG 232
1-303067	48-211	LG 233
1-303072	78-641	LG 835
1-303073	78-640	LG 835
1-303076	78-031	LG 826
1-303078	75-240	LG 297
1-303079	75-221	LG 280
1-303080	75-031	LG 278
1-303105	06-003	LG 805
1-303146	396-726*	LG 391
1-303146	596-344*	LG 495
1-303146	91-312	LG 478
1-303146	96-344*	LG 536
1-303164	09-802	LG 233
1-303197	07-103	LG 775
1-303200	45-078	LG 230
1-303221	45-002	LG 237
1-303283	396-726*	LG 391
1-303283	596-344*	LG 495
1-303283	91-312	LG 478
1-303283	96-344*	LG 536
1-303284	07-317	LG 771
1-303314	09-804	LG 233
1-303495	396-726*	LG 391
1-303495	596-344*	LG 495
1-303495	91-335	LG 420
1-303495	96-344*	LG 536
1-303499	75-181	LG 280
1-303514	09-804	LG 233
1-303514	45-030	LG 245
1-303514	45-127	LG 244
1-303527	396-726*	LG 391
1-303527	596-344*	LG 495
1-303527	91-256	LG 437
1-303527	96-344*	LG 536
1-303543	45-220	LG 232
131-3939-03	394-129*	LG 441
1-322110	43-075	
1-323051	75-221	LG 280
1-323200	75-226	LG 281
1-323225	75-227	LG 281
1-323275	48-148	LG 695
1-323285	34-009	LG 821
1-323288	75-177	LG 281
1-323300	75-113	LG 281
1-323329	45-031	LG 232
1-323344	15-404	LG 279
1-323515	396-716*	LG 451
1-323515	596-310*	LG 447
1-323515	91-313	LG 494
1-323515	96-310*	LG 444
1-323532	82-022	LG 886
1-323537	09-802	LG 233
1-323539	09-802	LG 233
1-323722	75-963	LG 281
1-323734	15-405	LG 279
1323735	15-401	LG 279
1-323735	15-401	LG 279
1-324157	48-148	LG 695
1-363173	45-220	LG 232
13-6398	92-028	LG 433
1-373077	45-104	LG 939
1-402006	82-307-0	LG 874
1-403024	15-408	LG 279
1-403025	15-409	LG 280
1-403026	396-716*	LG 451
1-403026	596-310*	LG 447
1-403026	91-313	LG 494
1-403026	96-310*	LG 444
1-403059	396-716*	LG 451
1-403059	596-310*	LG 447
1-403059	91-313	LG 494
1-403059	96-310*	LG 444
1-403075	396-716*	LG 451
1-403075	596-310*	LG 447
1-403075	96-310*	LG 444
1-403086	396-716*	LG 451
1-403086	596-310*	LG 447
1-403086	91-368	LG 460
1-403086	96-310*	LG 444
1-403088	15-410	LG 280
1-403105	15-411	LG 280
1-403121	33-024	LG 945
1-403148	396-716*	LG 451
1-403148	596-310*	LG 447
1-403148	91-368	LG 460
1-403148	96-310*	LG 444
1-403149	396-716*	LG 451
1-403149	596-310*	LG 447
1-403149	96-310*	LG 444
1-403174	75-963	LG 281
1-413093	75-230	LG 281
1-413094	75-292	LG 281
1-413096	75-231	LG 281
1-413308	75-232	LG 281
1-413438	396-716*	LG 451
1-413438	596-310*	LG 447
1-413438	96-310*	LG 444
1-413438	99-127	LG 375
1-503031	40-703	LG 590
1-513009	45-038	LG 224
1-513016	82-022	LG 886
1-513051	33-015	LG 948
1513075	33-334	LG 730
1-513075	33-334	LG 730
1-513075	33-335	LG 730
1-513075	33-336	LG 730
1-513152	33-027	LG 947
1-513211	83-010	LG 819
1-513211	83-400	LG 819
1-513336	45-040	LG 249
1-513508	07-317	LG 771
1-513547	48-009	LG 697
1-513648	72-722	LG 1045
1-513807	72-722	LG 1045
1-513809	45-060	LG 234
1-513810	45-015	LG 233
1-513810	45-060	LG 234
1-513918	09-804	LG 233
1-513972	591-259*	LG 438
1-513972	91-259	LG 432
1520843	91-313	LG 494
1-523027	48-236	LG 724
1-523175	15-412	LG 280
1-523328	27-500	LG 724
-1541001	33-114	LG 734
1-541003	33-114	LG 734
1-541050	33-114	LG 734
1-541353	33-114	LG 734
1-542322	33-114	LG 734
1-543028	15-413	LG 280
1-543070	33-397	LG 942
1-543224	75-113	LG 281

* OREGON® Gator™ replacement blade

EXMARK

OEM No.	OREGON	Page
1-543259	33-114	LG 734
1-543365	07-317	LG 771
1-543523	15-415	LG 280
1-543548	15-416	LG 280
1-543749	15-417	LG 280
1-543860	33-114	LG 734
1-543862	33-114	LG 734
1-551054	33-114	LG 734
1-583862	33-114	LG 734
1602501	78-021	LG 832
1-603045	75-114	LG 281
1-603193	15-418	LG 280
1-603283	396-739*	LG 479
1-603283	91-188	LG 439
1-603295	15-419	LG 280
1-603299	72-311-1	LG 1039
1-603306	75-115	LG 260
1-603306	75-178	LG 281
1-603321	48-007	LG 1039
1-603576	15-420	LG 280
1-603582	15-421	LG 280
1-603602	48-007	LG 1039
1-603637	91-170	LG 437
1-603718	27-501	LG 724
1-603805	78-005	LG 823
1-603874	396-739*	LG 479
1-603874	91-217	LG 558
1-603874	91-264	LG 473
1-603874	94-072	LG 568
1-613098	78-006	LG 828
1-613111	396-740*	LG 415
1-613111	596-319*	LG 415
1-613111	91-378	LG 414
1-613111	96-319*	LG 415
1-613112	396-740*	LG 415
1-613112	596-319*	LG 415
1-613112	91-217	LG 558
1-613112	91-311	LG 439
1-613112	96-319*	LG 415
1-613204	45-306	LG 804
1-631560	45-038	LG 224
1-631645	33-115	LG 738
1-631731	33-135	LG 737
1-631732	33-136	LG 737
1-633099	33-115	LG 738
1-633109	78-011	LG 827
1-633111	33-028	LG 947
1-633127	75-186	LG 281
1-633131	06-004	LG 805
1-633162	15-424	LG 280
1-633173	75-188	LG 256
1-633366	75-960	LG 257
1-633482	396-726*	LG 391
1-633482	596-344*	LG 495
1-633482	91-312	LG 478
1-633482	96-344*	LG 536
1-633483	396-740*	LG 415
1-633483	596-319*	LG 415
1-633483	91-217	LG 558
1-633483	91-264	LG 473
1-633483	96-319*	LG 415
1-633484	396-726*	LG 391
1-633484	596-344*	LG 495
1-633484	91-335	LG 420
1-633484	96-344*	LG 536
1-633485	396-726*	LG 391
1-633485	596-344*	LG 495
1-633485	91-181	LG 495
1-633485	96-344*	LG 536
1-633569	75-234	LG 281
1-633584	45-206	LG 231
1-633585	45-205	LG 228
1-633659	75-234	LG 281
1-633673	33-002	LG 946
1-633673-B	33-002	LG 946
1-633673-M	33-002	LG 946
1-633853	15-425	LG 280
1-634619	82-022	LG 886
1-634645	33-115	LG 738
1-634662	72-735	LG 1045
1-634972	82-318	LG 884
164-1300	33-136	LG 737
1-641300	33-136	LG 737
1-643006	91-374	LG 442
1-643006	96-699*	LG 442
1-643052	75-967	LG 258
1-643097	91-374	LG 442
1643275	33-317-0	LG 729
1-643275	33-317-0	LG 729
1-644092	82-349	LG 886
16-4667	78-011	LG 827
1-65304	33-137	LG 737
1-65304	33-153	LG 737
1-65304	33-187	LG 738
1653048	33-187	LG 738
1-653048	33-137	LG 737
1-653048	33-153	LG 737
1-653048	33-187	LG 738
1-653101	596-327*	LG 434
1-653101	91-369	LG 434
1-653101	96-327*	LG 417
1-653102	596-327*	LG 434
1-653102	91-373	LG 383
1-653102	96-327*	LG 417
1-653163	75-235	LG 281
1-653163	75-667	LG 282
1-653178	596-327*	LG 434
1-653178	96-327*	LG 417
1-653179	596-327*	LG 434
1-653179	96-327*	LG 417
1-653292	33-137	LG 737
1-653292	33-153	LG 737
1-653292	33-187	LG 738
1-653332	15-426	LG 280
1-653333	15-427	LG 282
1-653368	75-961	LG 281
1-653416	75-917	LG 282
1-653438	75-236	LG 282
1-740275	33-019	LG 948
230-237	45-031	LG 232
302013	43-075	
302030	82-306	LG 874
302122	48-200	LG 694
303028	78-031	LG 826
303044	09-804	LG 233
303044	45-030	LG 245
303044	45-127	LG 244
303057	45-220	LG 232
303067	48-211	LG 233
303072	78-641	LG 835
303073	78-640	LG 835
303076	78-031	LG 826
303078	75-240	LG 297
303079	75-221	LG 280
303080	75-031	LG 278
303105	06-003	LG 805
303146	91-181	LG 495
303146	91-312	LG 478
303164	09-802	LG 233
303200	45-078	LG 230
303221	45-002	LG 237
303283	396-726*	LG 391
303283	596-344*	LG 495
303283	91-184	LG 421
303283	96-344*	LG 536
303284	07-317	LG 771
303314	09-804	LG 233
303499	75-181	LG 280
303514	45-030	LG 245
303514	45-127	LG 244
303527	396-726*	LG 391
303527	596-344*	LG 495
303527	91-256	LG 437
303527	96-344*	LG 536
303543	45-220	LG 232
322110	43-075	
323051	75-221	LG 280
323200	75-226	LG 281
323225	75-227	LG 281
323275	48-148	LG 695
323288	75-177	LG 281
323300	75-113	LG 281
323329	45-031	LG 232
323344	15-404	LG 279
323515	396-716*	LG 451
323515	596-310*	LG 447
323515	91-313	LG 494
323515	96-310*	LG 444
323539	09-802	LG 233
323734	15-405	LG 279
323735	15-401	LG 279
324157	48-148	LG 695
363007	45-030	LG 245
363173	45-220	LG 232
373077	45-104	LG 939
38383	33-027	LG 947
402006	82-307-0	LG 874
403024	15-408	LG 279
403025	15-409	LG 280
403059	91-313	LG 494
403086	396-716*	LG 451
403086	596-310*	LG 447
403086	91-368	LG 460
403086	96-310*	LG 444
403088	15-410	LG 280
403105	15-411	LG 280
403121	33-024	LG 945
403148	396-716*	LG 451
403148	596-310*	LG 447
403148	91-368	LG 460
403148	96-310*	LG 444
403149	396-716*	LG 451
403149	596-310*	LG 447
403149	96-310*	LG 444
403174	75-963	LG 281
413093	75-230	LG 281
413094	75-292	LG 281
413096	75-231	LG 281
413308	75-232	LG 281
413438	99-127	LG 375
42-1000	94-017	LG 441
42-1000-S	94-017	LG 441
46-5650	34-210	LG 834
46-6560	07-392	LG 767
48473	78-007	LG 833
513009	45-038	LG 224
513051	33-015	LG 948
513075	33-334	LG 730
513075	33-335	LG 730
513075	33-336	LG 730
513152	33-027	LG 947
513211	83-010	LG 819
513211	83-400	LG 819
513336	45-040	LG 249
513508	07-317	LG 771
513547	48-009	LG 697
513648	72-722	LG 1045
513809	45-060	LG 234
513810	45-015	LG 233
513918	09-804	LG 233
513972	591-259*	LG 438
513972	91-259	LG 432
520843S	91-313	LG 494
523175	15-412	LG 280
54044	45-206	LG 231
541001	33-114	LG 734
541003	33-114	LG 734
541050	33-114	LG 734
541352	33-114	LG 734
543028	15-413	LG 280
543070	33-397	LG 942
543224	75-113	LG 281
543259	33-114	LG 734
543365	07-317	LG 771
543523	15-415	LG 280
543548	15-416	LG 280
543749	15-417	LG 280
543860	33-114	LG 734
543862	33-114	LG 734
551054	33-114	LG 734
603045	75-114	LG 281
603193	15-418	LG 280
603283	396-739*	LG 479
603283	91-188	LG 439
603295	15-419	LG 280
603299	72-311-1	LG 1039
603306	75-115	LG 260
603306	75-178	LG 281
603321	48-007	LG 1039
603576	15-420	LG 280
603582	15-421	LG 280
603602	48-007	LG 1039
603637	91-170	LG 437
603805	78-005	LG 823
603874	396-739*	LG 479
603874	91-217	LG 558
603874	94-072	LG 568
613072	91-217	LG 558
613072	91-264	LG 473
613098	78-006	LG 828
613111	396-740*	LG 415
613111	596-319*	LG 415
613111	91-378	LG 414
613111	96-319*	LG 415
613112	91-264	LG 473
613117	91-217	LG 558
613250	91-217	LG 558
613250	91-264	LG 473
63111	33-028	LG 947
631560	45-038	LG 224
631645	33-115	LG 738
631731	33-135	LG 737
631732	33-136	LG 737
633099	33-115	LG 738
633109	78-011	LG 827
633111	33-028	LG 947
633127	75-186	LG 281
633131	06-004	LG 805
633162	15-424	LG 280
633173	75-188	LG 256
633366	75-960	LG 257
633482	396-726*	LG 391
633482	596-344*	LG 495
633482	91-312	LG 478
633482	96-344*	LG 536
633483	396-740*	LG 415
633483	596-319*	LG 415
633483	91-217	LG 558
633483	91-264	LG 473
633483	96-319*	LG 415
633484	396-726*	LG 391
633484	596-344*	LG 495
633484	91-335	LG 420
633484	96-344*	LG 536
633485	396-726*	LG 391
633485	596-344*	LG 495
633485	91-181	LG 495
633485	96-344*	LG 536
633569	75-234	LG 281

* OREGON® Gator™ replacement blade

2019 OEM X-Reference

OEM No.	OREGON	Page
EXMARK		
633585	45-205	LG 228
633673	33-002	LG 946
633853	15-425	LG 280
634972	82-318	LG 884
641300	33-136	LG 737
643006	91-374	LG 442
643006	96-699*	LG 442
643052	75-967	LG 258
644092	82-349	LG 886
653048	33-137	LG 737
653048	33-153	LG 737
653048	33-187	LG 738
653101	91-369	LG 434
653102	91-373	LG 383
653163	75-235	LG 281
653163	75-667	LG 282
653332	15-426	LG 280
653333	15-427	LG 282
653368	75-961	LG 281
653416	75-917	LG 282
653438	75-236	LG 282
68-2730	72-311-1	LG 1039
740275	33-019	LG 948
987249	33-317-0	LG 729
98-7249	33-317-0	LG 729
99-4627	15-827	LG 322
99-4638	78-005	LG 823
BB196-369	45-030	LG 245
E303314	09-804	LG 233
E303514	09-804	LG 233
E303514	45-030	LG 245
E303514	45-127	LG 244
E322110	43-075	
E323329	45-031	LG 232
E323515	396-716*	LG 451
E323515	596-310*	LG 447
E323515	91-313	LG 494
E323515	96-310*	LG 444
E323539	09-802	LG 233
E403149	396-716*	LG 451
E403149	596-310*	LG 447
E403149	96-310*	LG 444
E513152	33-027	LG 947
E513547	48-009	LG 697
E515508	07-317	LG 771
E613098	78-006	LG 828
E633482	396-726*	LG 391
E633482	596-344*	LG 495
E633482	91-312	LG 478
E633482	96-344*	LG 536
E633485	396-726*	LG 391
E633485	596-344*	LG 495
E633485	91-181	LG 495
E633485	96-344*	LG 536
E-Z RAKE		
91010	43-025	LG 913
E-Z ROLL		
S335	75-101	LG 269
EZ-GO		
14153G1	15-428	LG 283
1446-G1	30-102	LG 220
16548G1	15-429	LG 283
26414G01	15-430	LG 283
27077G02	15-431	LG 283
72054G01	15-432	LG 283
F.D. KEES		
363143	75-036	LG 297
363144	75-221	LG 280
363145	75-240	LG 297
363173	45-220	LG 232

OEM No.	OREGON	Page
483013	75-058	LG 255
FARM-ETTE		
45-29	75-120	LG 300
FARWELL, OZMUN, KIRK		
754-0230	75-008	LG 301
754-0240	75-009	LG 301
754-0241	75-012	LG 301
754-0266	75-016	LG 301
754-0293	75-018	LG 301
954-0230	75-008	LG 301
954-0240	75-009	LG 301
954-0241	75-012	LG 301
954-0241A	75-012	LG 301
954-0266	75-016	LG 301
954-0266A	75-016	LG 301
954-0293	75-018	LG 301
FEDERAL MART		
754-0935	75-092	LG 304
954-0935	75-092	LG 304
FEDERATED DEPT. STORE		
754-0151	75-004	LG 301
754-0178	75-179	LG 310
954-0151	75-004	LG 301
954-0178	75-179	LG 310
FERRIS		
0050407X9	80-014	LG 727
11037	33-031	LG 742
14672	33-024	LG 945
1520814	78-642	LG 841
1520828	45-220	LG 232
1520828S	45-220	LG 232
1520842	91-209	LG 552
1520842S	91-209	LG 552
1520843	91-183	LG 370
1520843S	91-183	LG 370
1520873	15-434	LG 283
1521083	33-114	LG 734
1521227	91-235	LG 461
1521227	91-623	LG 485
1521227S	91-235	LG 461
1521227S	91-623	LG 485
1521842	33-024	LG 945
1522040	33-115	LG 738
15225019-76	04-125	LG 694
1525019-76	04-125	LG 694
1530301	82-350	LG 889
1541476	09-803	LG 697
1541477	09-802	LG 233
1541480	82-305	LG 908
1541657	45-188	LG 230
1541659	45-188	LG 230
1550407-9	80-014	LG 727
1714760	72-021	LG 1040
20824	15-435	LG 283
20842	396-727*	LG 467
20842	596-347*	LG 448
20842	91-209	LG 552
20842	96-347*	LG 387
20842s	396-727*	LG 467
20842s	596-347*	LG 448
20842s	91-209	LG 552
20842s	96-347*	LG 387
20843	396-716*	LG 451
20843	596-310*	LG 447
20843	91-183	LG 370
20843	96-310*	LG 444
20843S	396-716*	LG 451
20843S	596-310*	LG 447
20843S	91-183	LG 370
20843S	96-310*	LG 444

OEM No.	OREGON	Page
21063	15-436	LG 283
21227S	396-726*	LG 391
21227S	596-344*	LG 495
21227S	91-235	LG 461
21227S	96-344*	LG 536
21261	15-437	LG 283
21297	75-946	LG 283
21451	33-015	LG 948
21684	15-438	LG 283
21769	33-027	LG 947
22061	75-943	LG 283
22062	15-440	LG 283
22095	33-028	LG 947
22148	75-944	LG 284
22182	33-026	LG 947
22314	75-954	LG 284
22667	75-945	LG 284
30301	82-350	LG 889
48112	396-764*	LG 537
48112	596-341*	LG 482
48112	91-627	LG 482
48112	92-035	LG 537
48112	96-341*	LG 446
48113	396-764*	LG 537
48113	596-341*	LG 482
48113	91-627	LG 482
48113	92-035	LG 537
48113	96-341*	LG 446
481709	396-764*	LG 537
481709	596-341*	LG 482
481709	91-627	LG 482
481709	92-035	LG 537
481709	96-341*	LG 446
481711	396-726*	LG 391
481711	596-344*	LG 495
481711	91-623	LG 485
481711	96-344*	LG 536
481712	396-727*	LG 467
481712	596-347*	LG 448
481712	91-628	LG 387
481712	96-347*	LG 387
5020824	15-435	LG 283
5020827	45-243	LG 243
5020842	396-727*	LG 467
5020842	596-347*	LG 448
5020842	91-209	LG 552
5020842	96-347*	LG 387
5020842s	396-727*	LG 467
5020842s	596-347*	LG 448
5020842s	91-209	LG 552
5020842s	96-347*	LG 387
5020843	396-716*	LG 451
5020843	596-310*	LG 447
5020843	91-183	LG 370
5020843	96-310*	LG 444
5020843S	396-716*	LG 451
5020843S	596-310*	LG 447
5020843S	91-183	LG 370
5020843S	96-310*	LG 444
5020843X2	396-716*	LG 451
5020843X2	596-310*	LG 447
5020843X2	91-183	LG 370
5020843X2	96-310*	LG 444
5020843XS	91-183	LG 370
5021063	15-436	LG 283
5021227	396-726*	LG 391
5021227	596-344*	LG 495
5021227	91-235	LG 461
5021227	96-344*	LG 536
5021227S	396-726*	LG 391
5021227S	596-344*	LG 495
5021227S	91-235	LG 461
5021227S	96-344*	LG 536
5021227X2	396-726*	LG 391
5021227X2	596-344*	LG 495

OEM No.	OREGON	Page
5021227X2	91-235	LG 461
5021227X2	96-344*	LG 536
5021227XS	91-235	LG 461
5021261	15-437	LG 283
5021297	75-946	LG 283
5021357X1	83-011	LG 819
5021684	15-438	LG 283
5021769	33-027	LG 947
5021842	33-024	LG 945
5022061	15-016	LG 323
5022062	15-440	LG 283
5022148	75-944	LG 284
5022173	15-120	LG 284
5022314	75-954	LG 284
5022315	75-954	LG 284
5022667	75-945	LG 284
5030301	82-350	LG 889
5061033	82-350	LG 889
5061675	33-027	LG 947
5061827S	391-608*	LG 443
5061827S	91-608	LG 443
5100407	27-504	LG 725
5100555	75-954	LG 284
5101755	396-727*	LG 467
5101755	596-347*	LG 448
5101755	91-209	LG 552
5101755	96-347*	LG 387
5101755BM	396-727*	LG 467
5101755BM	596-347*	LG 448
5101755BM	91-209	LG 552
5101755BM	96-347*	LG 387
5101755S	396-727*	LG 467
5101755S	596-347*	LG 448
5101755S	91-209	LG 552
5101755S	96-347*	LG 387
5101755YP	396-727*	LG 467
5101755YP	596-347*	LG 448
5101755YP	91-209	LG 552
5101755YP	96-347*	LG 387
5101756S	396-726*	LG 391
5101756S	596-344*	LG 495
5101756S	91-312	LG 478
5101756S	96-344*	LG 536
5101756X2	396-726*	LG 391
5101756X2	596-344*	LG 495
5101756X2	91-312	LG 478
5101756X2	96-344*	LG 536
5101986	396-716*	LG 451
5101986	596-310*	LG 447
5101986	91-313	LG 494
5101986	96-310*	LG 444
5101986S	396-716*	LG 451
5101986S	596-310*	LG 447
5101986S	91-313	LG 494
5101986S	96-310*	LG 444
5102035	15-121	LG 284
5102040	15-122	LG 284
5102227S	396-731*	LG 427
5102227S	91-609	LG 469
5103303S	396-716*	LG 451
5103303S	596-310*	LG 447
5103303S	91-368	LG 460
5103303S	96-310*	LG 444
5103303X2	396-716*	LG 451
5103303X2	596-310*	LG 447
5103303X2	91-368	LG 460
5103303X2	96-310*	LG 444
5103304S	396-726*	LG 391
5103304S	596-344*	LG 495
5103304S	91-335	LG 420
5103304S	96-344*	LG 536
5103304X2	396-726*	LG 391
5103304X2	596-344*	LG 495
5103304X2	91-335	LG 420
5103304X2	96-344*	LG 536

X

* OREGON® Gator™ replacement blade

OEM No.	OREGON	Page
FERRIS		
5103305S	396-727*	LG 467
5103305S	596-347*	LG 448
5103305S	96-347*	LG 387
5103587	75-944	LG 284
5103871	75-943	LG 283
552172	45-030	LG 245
553668	09-804	LG 233
9622	33-024	LG 945
A48158	91-235	LG 461
A48185	396-726*	LG 391
A48185	596-344*	LG 495
A48185	91-623	LG 485
A48185	96-344*	LG 536
A48304	396-727*	LG 467
A48304	596-347*	LG 448
A48304	91-628	LG 387
A48304	96-347*	LG 387
FIRESTONE		
754-0145	75-145	LG 300
754-0151	75-004	LG 301
754-0178	75-179	LG 310
754-0935	75-092	LG 304
954-0145	75-145	LG 300
954-0145A	75-145	LG 300
954-0151	75-004	LG 301
954-015A	75-145	LG 300
954-0178	75-179	LG 310
954-0935	75-092	LG 304
FIX A THREAD		
23623	42-061	LG 1018
FMC		
171-0566	34-005	LG 821
171-3803	34-009	LG 821
171-4742	78-034	LG 822
171-5340	34-006	LG 821
172-0567	34-030	LG 821
172-7978	34-031	LG 821
172-9440	34-002	LG 821
603810	78-032	LG 822
FOLEY BELSAW		
670678	75-120	LG 300
FORD		
160191	91-207	LG 447
163442	96-624*	LG 447
326217	75-208	LG 277
330721CJ	91-342	LG 447
500904	91-342	LG 447
84521624	91-207	LG 447
8A1216B	45-205	LG 228
8A1217B	45-206	LG 231
TR106637	90-644*	LG 561
TR106637	91-806	LG 447
TR94D9776	90-644*	LG 561
TR94D9776	91-806	LG 447
FORD / NEW HOLLAND		
160191	91-207	LG 447
163442	96-624*	LG 447
330721CJ	91-342	LG 447
500904	91-342	LG 447
84521624	91-207	LG 447
TR106637	90-644*	LG 561
TR106637	91-806	LG 447
TR94D9776	90-644*	LG 561
FOREST CITY MATERIALS		
754-0145	75-145	LG 300
754-0151	75-004	LG 301
754-0178	75-179	LG 310
754-0201	75-441	LG 334
754-0230	75-008	LG 301
754-0234	75-441	LG 334
754-0293	75-018	LG 301
754-0935	75-092	LG 304
954-0145	75-145	LG 300
954-0145A	75-145	LG 300
954-0151	75-004	LG 301
954-015A	75-145	LG 300
954-0178	75-179	LG 310
954-0201	75-441	LG 334
954-0230	75-008	LG 301
954-0234	75-441	LG 334
954-0293	75-018	LG 301
954-0935	75-092	LG 304
FRED MEYERS INC.		
754-0145	75-145	LG 300
754-0151	75-004	LG 301
754-0201	75-441	LG 334
754-0234	75-441	LG 334
754-0935	75-092	LG 304
954-0145	75-145	LG 300
954-0145A	75-145	LG 300
954-0151	75-004	LG 301
954-015A	75-145	LG 300
954-0201	75-441	LG 334
954-0234	75-441	LG 334
954-0935	75-092	LG 304
FREDERICK WHOLESALE		
754-0935	75-092	LG 304
954-0935	75-092	LG 304
FUJI ROBIN		
261-65902-AO	83-282	LG 817
261-65902-AO	83-402	LG 817
531-600-5620	49-026	LG 769
G. MC NEW CO.		
754-0935	75-092	LG 304
954-0935	75-092	LG 304
G.A.C.		
754-0145	75-145	LG 300
954-0145	75-145	LG 300
954-0145A	75-145	LG 300
954-015A	75-145	LG 300
GAMBLE SKOGMO		
21615	75-111	LG 306
21649	75-112	LG 306
39456	75-145	LG 300
43066	75-168	LG 310
48044	75-179	LG 310
754-0145	75-145	LG 300
754-0151	75-004	LG 301
754-0178	75-179	LG 310
754-0194	75-090	LG 301
754-0201	75-441	LG 334
754-0230	75-008	LG 301
754-0234	75-441	LG 334
754-0240	75-009	LG 301
754-0241	75-012	LG 301
754-0266	75-016	LG 301
754-0293	75-018	LG 301
754-0935	75-092	LG 304
954-0145	75-145	LG 300
954-0145A	75-145	LG 300
954-0151	75-004	LG 301
954-015A	75-145	LG 300
954-0178	75-179	LG 310
954-0194	75-090	LG 301
954-0201	75-441	LG 334
954-0230	75-008	LG 301
954-0234	75-441	LG 334
954-0240	75-009	LG 301
954-0241	75-012	LG 301
954-0241A	75-012	LG 301
954-0266	75-016	LG 301
954-0266A	75-016	LG 301
954-0293	75-018	LG 301
954-0935	75-092	LG 304
GATES		
6981	75-208	LG 277
GENERAC		
070185D	83-029	LG 815
73111GS	30-702	LG 185
GENERAL POWER		
630186	33-024	LG 945
GIANT VAC		
21536	396-726*	LG 391
21536	596-344*	LG 495
21536	93-006	LG 444
21536	96-344*	LG 536
21537	396-716*	LG 451
21537	596-310*	LG 447
21537	93-005	LG 447
21537	96-310*	LG 444
21538	396-727*	LG 467
21538	596-347*	LG 448
21538	93-008	LG 510
21538	96-347*	LG 387
3021536	396-726*	LG 391
3021536	596-344*	LG 495
3021536	93-006	LG 444
3021536	96-344*	LG 536
3021537	396-716*	LG 451
3021537	596-310*	LG 447
3021537	93-005	LG 447
3021537	96-310*	LG 444
3021538	396-727*	LG 467
3021538	596-347*	LG 448
3021538	93-008	LG 510
3021538	96-347*	LG 387
3021584	396-716*	LG 451
3021584	596-310*	LG 447
3021584	93-005	LG 447
3021584	96-310*	LG 444
GIBSON CO-OP		
754-0266	75-016	LG 301
954-0266	75-016	LG 301
954-0266A	75-016	LG 301
GILSON		
1044	45-206	LG 231
1045	45-002	LG 237
1046	45-002	LG 237
1140	45-205	LG 228
11795	34-024	LG 822
11964	78-034	LG 822
18915	76-067-0	LG 726
200983	75-208	LG 277
207924	34-001	LG 821
208918	72-307	LG 1038
210453	72-306	LG 1038
212655	33-334	LG 730
212655	33-335	LG 730
212655	33-336	LG 730
229768	34-008	LG 821
231290	78-032	LG 822
233214	82-013	LG 891
23486	34-031	LG 821
236544	45-257	LG 245
240247	82-013	LG 891
241013	82-013	LG 891
24445	34-038	LG 821
31625	34-003	LG 821
32222	76-067-0	LG 726
36374	34-020	LG 821
36457	33-386	LG 942
37094	34-022	LG 822
6588	34-009	LG 821
7714	34-002	LG 821
88213	82-013	LG 891
88272	82-013	LG 891
GOLDBLATTS		
754-0935	75-092	LG 304
954-0935	75-092	LG 304
GOODRICH		
754-0145	75-145	LG 300
754-0151	75-004	LG 301
754-0178	75-179	LG 310
754-0201	75-441	LG 334
754-0234	75-441	LG 334
754-0935	75-092	LG 304
954-0145	75-145	LG 300
954-0145A	75-145	LG 300
954-0151	75-004	LG 301
954-015A	75-145	LG 300
954-0178	75-179	LG 310
954-0201	75-441	LG 334
954-0234	75-441	LG 334
954-0935	75-092	LG 304
GOODYEAR		
85810	75-208	LG 277
89002	75-354	LG 319
89209	75-005	LG 307
89210	75-040	LG 306
89211	75-045	LG 307
GOODYEAR POWER EQUIP		
754-0145	75-145	LG 300
754-0151	75-004	LG 301
754-0178	75-179	LG 310
754-0201	75-441	LG 334
754-0234	75-441	LG 334
754-0240	75-009	LG 301
754-0241	75-012	LG 301
754-0266	75-016	LG 301
754-0293	75-018	LG 301
754-0935	75-092	LG 304
954-0145	75-145	LG 300
954-0145A	75-145	LG 300
954-0151	75-004	LG 301
954-015A	75-145	LG 300
954-0178	75-179	LG 310
954-0201	75-441	LG 334
954-0234	75-441	LG 334
954-0240	75-009	LG 301
954-0241	75-012	LG 301
954-0241A	75-012	LG 301
954-0266	75-016	LG 301
954-0266A	75-016	LG 301
954-0293	75-018	LG 301
954-0935	75-092	LG 304
GRASSHOPPER		
100934	69-395	LG 206
100941	30-430	LG 211
100941	30-846	LG 211
10205	45-047	LG 241
110080	45-227	LG 234
110081	45-227	LG 234
110082	45-025	LG 247
110082	45-227	LG 234
11193	45-010	LG 238

X

* OREGON® Gator™ replacement blade

2019 OEM X-Reference

OEM No.	OREGON	Page
GRASSHOPPER		
120050	45-047	LG 241
120050	45-258	LG 224
120081	45-225	LG 232
122043	45-404	LG 234
122044	45-404	LG 234
181465	33-032	LG 742
181470	33-035	LG 742
183806	33-386	LG 942
184082	33-410	LG 947
184251	33-334	LG 730
184251	33-335	LG 730
184251	33-336	LG 730
185530	33-249	LG 731
265537	06-003	LG 805
265545	06-004	LG 805
265615	45-103	LG 938
265615	45-104	LG 939
274-2905	33-121	LG 734
274-2932	33-117	LG 733
282575	45-831	LG 234
320231	396-713*	LG 577
320231	91-557	LG 545
320231	96-343*	LG 395
320232	91-536	LG 395
320233	396-713*	LG 577
320233	96-343*	LG 395
320234	396-713*	LG 577
320234	91-536	LG 395
320234	96-343*	LG 395
320235	396-713*	LG 577
320235	96-343*	LG 395
320236	396-729*	LG 449
320236	596-329*	LG 578
320236	91-558	LG 448
320236	96-329*	LG 449
320238	396-729*	LG 449
320238	596-329*	LG 578
320238	91-535	LG 448
320238	96-329*	LG 449
320239	396-729*	LG 449
320239	596-329*	LG 578
320239	91-532	LG 448
320239	96-329*	LG 449
320239B	91-532	LG 448
320239B	91-535	LG 448
320239B	91-538	LG 577
320239B	91-558	LG 448
320240	396-729*	LG 449
320240	596-329*	LG 578
320240	91-538	LG 577
320240	96-329*	LG 449
320241	396-729*	LG 449
320241	596-329*	LG 578
320241	96-329*	LG 449
320242	396-712*	LG 449
320242	596-346*	LG 393
320242	91-547	LG 449
320242	96-346*	LG 449
320243	396-712*	LG 449
320243	596-346*	LG 393
320243	91-531	LG 393
320243	96-346*	LG 449
320244	396-712*	LG 449
320244	596-346*	LG 393
320244	91-534	LG 578
320244	96-346*	LG 449
320245	396-712*	LG 449
320245	596-346*	LG 393
320245	91-531	LG 393
320245	96-346*	LG 449
320245B	396-712*	LG 449
320245B	596-346*	LG 393
320245B	91-531	LG 393
320245B	96-346*	LG 449
320246	396-712*	LG 449
320246	596-346*	LG 393
320246	91-537	LG 578
320246	96-346*	LG 449
320247	396-712*	LG 449
320247	596-346*	LG 393
320247	91-539	LG 393
320247	96-346*	LG 449
320250	396-778*	LG 394
320250	91-544	LG 397
320250	96-778*	LG 394
320251	396-778*	LG 394
320251	91-533	LG 394
320251	96-778*	LG 394
320252	396-778*	LG 394
320252	96-778*	LG 394
320253	396-778*	LG 394
320253	91-533	LG 394
320253	96-778*	LG 394
320254	396-778*	LG 394
320254	96-778*	LG 394
320255	396-778*	LG 394
320255	91-036	LG 450
320255	96-778*	LG 394
320320	396-713*	LG 577
320320	96-343*	LG 395
320321	396-729*	LG 449
320321	596-329*	LG 578
320321	96-329*	LG 449
320322	396-712*	LG 449
320322	596-346*	LG 393
320322	96-346*	LG 449
320323	396-778*	LG 394
320323	96-778*	LG 394
36778	45-010	LG 238
381904	15-443	LG 284
381914	75-144	LG 284
38199	45-002	LG 237
382025	15-444	LG 284
382034	15-123	LG 284
382037	15-445	LG 284
382049	15-446	LG 284
382064	15-125	LG 284
382082	15-124	LG 284
382084	15-125	LG 284
382090	75-216	LG 257
382093	15-126	LG 284
382095	75-669	LG 284
382097	15-127	LG 284
382099	15-128	LG 284
382777	15-449	LG 284
382800	15-450	LG 285
382836	15-451	LG 285
388762	33-117	LG 733
388766	33-113	LG 740
388767	33-121	LG 734
393225	78-021	LG 832
393225	78-031	LG 826
393312	78-045	LG 828
414686	45-227	LG 234
426122	72-133	LG 1040
426132	72-133	LG 1040
430-810 2832	33-410	LG 947
483800	72-723	LG 1043
483801	72-723	LG 1043
483802	72-723	LG 1043
483803	72-723	LG 1043
484225	72-094	LG 1042
6033973	72-723	LG 1043
603725	72-134	LG 1040
603924	72-723	LG 1043
603925	72-723	LG 1043
603926	72-723	LG 1043
603927	72-723	LG 1043
603971	72-723	LG 1043
604180	33-117	LG 733
604182	33-113	LG 740
604796	33-410	LG 947
606242	33-121	LG 734
623762	82-352	LG 890
623763	82-351	LG 890
623781	82-351	LG 890
623782	82-352	LG 890
70134	91-531	LG 393
70134	91-534	LG 578
70134	91-537	LG 578
70134	91-539	LG 393
70134	91-547	LG 449
833210	45-227	LG 234
GRAVELY		
00191700	33-130	LG 733
00201010	15-030	LG 285
00272800	96-040*	LG 369
00273000	91-183	LG 370
00273100	396-806*	LG 453
00273100	596-817*	LG 371
00360200	92-152	LG 455
00450200	396-809*	LG 370
00450200	596-816*	LG 451
00450200	92-153	LG 370
00450300	396-806*	LG 453
00450300	596-817*	LG 371
00450300	92-151	LG 453
009240	15-218	LG 285
010900	30-819	LG 205
011234	396-805*	LG 452
011234	91-242	LG 371
0113700	91-005	LG 458
0113700	96-041*	LG 372
01182400	91-005	LG 458
01182400	96-041*	LG 372
0137051	91-005	LG 458
0137051	96-041*	LG 372
014668	91-244	LG 450
014668	96-040*	LG 369
01584500	92-602*	LG 455
01600500	96-040*	LG 369
018446	45-205	LG 228
018845	45-206	LG 231
018846	45-205	LG 228
019332	30-941	LG 219
02010100	15-030	LG 285
025124	396-740*	LG 415
025124	596-319*	LG 415
025124	91-239	LG 454
025124	91-253	LG 415
025124	96-319*	LG 415
02961600	92-217	LG 369
02961600	96-808*	LG 450
02961700	596-818*	LG 453
02961700	92-157	LG 453
02982000	396-809*	LG 370
02982000	596-816*	LG 451
02982000	92-153	LG 370
03123700	91-003	LG 370
03123751	91-003	LG 370
03253800	396-806*	LG 453
03253800	596-817*	LG 371
03253800	92-151	LG 453
03253900	396-807*	LG 454
03253900	596-815*	LG 578
03253900	92-159	LG 578
0347661046344	30-093	LG 206
0347661046344	30-812	LG 206
03498400	92-040	LG 369
03498400	96-040*	LG 369
03498451	91-244	LG 450
03498451	92-040	LG 369
03624700	191-015	LG 372
03624700	96-677*	LG 372
03624751	191-015	LG 372
03624751	96-677*	LG 372
038199	45-002	LG 237
041545	15-184	LG 285
04159600	92-415	LG 374
04159600	96-415*	LG 456
041599	15-185	LG 285
042925	30-935	LG 201
043954	30-080	LG 205
044767	33-388	LG 943
046998	396-723*	LG 413
046998	596-323*	LG 453
046998	96-323*	LG 477
046999	396-740*	LG 415
046999	596-319*	LG 415
046999	91-239	LG 454
046999	91-253	LG 415
046999	96-319*	LG 415
047685	91-254	LG 456
048864	91-239	LG 454
049028	15-151	LG 285
049029	15-220	LG 285
04916400	396-806*	LG 453
04916400	596-817*	LG 371
04919100	396-716*	LG 451
04919100	596-310*	LG 447
04919100	91-183	LG 370
04919100	96-310*	LG 444
04920600	91-183	LG 370
049270	15-187	LG 285
05408000	45-267	LG 235
05416000	45-269	LG 227
07200026	15-152	LG 264
07200027	15-153	LG 286
07200028	15-154	LG 286
07200030	15-155	LG 264
07200032	15-156	LG 286
07200036	15-031	LG 287
07200038	15-032	LG 287
07200039	15-157	LG 286
07200116	15-158	LG 286
07200433	15-159	LG 286
07219600	15-188	LG 285
07220600	15-184	LG 285
07220700	15-185	LG 285
07222300	15-151	LG 285
07222400	15-220	LG 285
07222700	15-187	LG 285
07223100	15-200	LG 285
07223800	15-201	LG 285
072242	15-202	LG 285
07224200	15-202	LG 285
07225000	15-203	LG 286
072258	15-222	LG 285
07225800	15-222	LG 285
072260	15-205	LG 266
07226000	15-205	LG 266
07234500	15-208	LG 266
07234600	15-164	LG 286
07234900	15-165	LG 286
07235100	15-167	LG 286
07238200	15-213	LG 286
07239200	15-169	LG 266
07239300	15-170	LG 266
07239400	15-171	LG 286
07240700	15-173	LG 287
07241300	15-174	LG 287
07241500	15-215	LG 287
07241600	115-200	LG 287
07241700	15-216	LG 266
07241800	15-217	LG 287
07242300	15-180	LG 287
07242800	15-181	LG 266
08779200	396-723*	LG 413

X

* OREGON® Gator™ replacement blade

OEM No.	OREGON	Page
GRAVELY		
08779200	596-323*	LG 453
08779200	96-323*	LG 477
08779251	396-723*	LG 413
08779251	596-323*	LG 453
08779251	96-323*	LG 477
08781800	91-239	LG 454
08781800	91-253	LG 415
08781851	91-239	LG 454
08781851	91-253	LG 415
08861600	396-805*	LG 452
08861600	91-242	LG 371
08866800	396-805*	LG 452
08898800	91-254	LG 456
08898900	91-239	LG 454
08898900	91-253	LG 415
08899100	91-239	LG 454
08899100	91-253	LG 415
08899100	92-159	LG 578
08899300	396-805*	LG 452
08899300	91-242	LG 371
08899800	92-040	LG 369
08899800	96-040*	LG 369
089046	91-239	LG 454
089046	91-253	LG 415
08904651	91-239	LG 454
08904651	91-253	LG 415
08979600	396-740*	LG 415
08979600	596-319*	LG 415
08979600	91-239	LG 454
08979600	91-253	LG 415
08979600	92-159	LG 578
08979600	96-319*	LG 415
08979651	91-239	LG 454
08979651	91-253	LG 415
08983800	91-254	LG 456
08983851	91-254	LG 456
090812	91-239	LG 454
090812	91-253	LG 415
09081200	396-807*	LG 454
09081200	596-815*	LG 578
09081200	91-239	LG 454
09081200	91-253	LG 415
09081200	92-159	LG 578
09082400	92-158	LG 453
09225400	33-119-1	LG 734
09232700	33-120	LG 734
09232700	33-138	LG 738
09246700	92-158	LG 453
09254700	392-416*	LG 374
09290500	392-416*	LG 374
09290500	92-416	LG 456
09290600	392-416*	LG 374
09290600	92-417	LG 456
10792	49-101	LG 602
10792	49-401	LG 605
10900	30-080	LG 205
10900	30-819	LG 205
111234	91-242	LG 371
11139	45-000	LG 237
11193	45-010	LG 238
11234	396-805*	LG 452
11234	91-242	LG 371
11641	45-295	LG 232
11824	33-016	LG 789
14646	45-002	LG 237
14647	45-002	LG 237
14668	91-244	LG 450
14668	92-040	LG 369
14673P1	75-079	LG 301
15373	30-082	LG 205
15435	33-628	LG 789
18272	33-395	LG 943
18445	45-206	LG 231
18446	45-205	LG 228
18543	35-543	LG 807
18563	07-400	LG 767
18610	33-761	LG 926
191700	33-130	LG 733
19223	33-393	LG 943
19332	30-941	LG 219
20031900	33-332	LG 730
20033100	60-220	LG 708
20034800	34-034	LG 821
20035300	15-218	LG 285
20067500	45-010	LG 238
201010	15-030	LG 285
2010100	15-030	LG 285
20259700	35-543	LG 807
20299	30-081	LG 205
20321000	60-220	LG 708
20636900	72-737	LG 1045
21060	34-007	LG 826
21060	34-019	LG 821
21196	60-220	LG 708
21255800	45-002	LG 237
21333	30-102	LG 220
21391200	30-938	LG 202
21391300	30-311	LG 199
21391300	30-804	LG 199
21391300	69-031	LG 199
21465500	33-401	LG 732
21495800	30-018	LG 198
21495900	30-018	LG 198
21496000	30-018	LG 198
21511300	45-010	LG 238
21527800	07-062	LG 775
21536000	30-527	LG 202
25124	91-239	LG 454
25124	91-253	LG 415
273000	91-183	LG 370
27892	78-032	LG 822
2961700	92-157	LG 453
2982000	92-153	LG 370
3115200	33-393	LG 943
32492	33-401	LG 732
3253800	92-151	LG 453
3253900	92-159	LG 578
34286	34-023	LG 822
3454900	33-384	LG 947
34766	30-093	LG 206
34984	92-040	LG 369
3498400	91-244	LG 450
3498400	92-040	LG 369
3498451	91-244	LG 450
3498451	92-040	LG 369
355100	33-334	LG 730
3551000	33-334	LG 730
360200	92-152	LG 455
36778	45-010	LG 238
37526	45-002	LG 237
37527	45-002	LG 237
37797	72-737	LG 1045
37823	45-010	LG 238
38199	45-002	LG 237
38947	91-255	LG 454
389900	33-120	LG 734
389900	33-138	LG 738
39128	83-300	LG 819
39306	83-300	LG 819
40216	33-317-0	LG 729
41545	15-184	LG 285
41599	15-185	LG 285
42925	30-935	LG 201
42926	30-810	LG 198
432100	33-317-0	LG 729
432101	33-317-0	LG 729
43954	30-080	LG 205
44063	49-700	LG 605
44766	33-334	LG 730
44766	33-335	LG 730
44766	33-336	LG 730
44767	33-388	LG 943
44941	45-303	LG 804
450200	92-153	LG 370
450300	92-151	LG 453
45071	33-334	LG 730
45071	33-335	LG 730
45071	33-336	LG 730
45205	72-737	LG 1045
45848	33-384	LG 947
46999	91-239	LG 454
46999	91-253	LG 415
47685	91-254	LG 456
48864	91-239	LG 454
48864	91-253	LG 415
49029	15-220	LG 285
4919100	91-183	LG 370
4920600	91-183	LG 370
49270	15-187	LG 285
51213	15-188	LG 285
51510000	82-040	LG 890
52586	72-737	LG 1045
53507600	33-388	LG 943
5404400	45-206	LG 231
5404500	45-205	LG 228
5408900	45-010	LG 238
5415100	45-010	LG 238
5416200	45-010	LG 238
58903200	72-737	LG 1045
59201000	82-041	LG 890
59202600	82-042	LG 891
59215400	82-042	LG 891
59215500	82-041	LG 890
61527600	82-040	LG 890
61543800	82-040	LG 890
69207500	82-042	LG 891
69219700	82-042	LG 891
7130100	72-737	LG 1045
715026	91-183	LG 370
7200036	15-031	LG 287
7200038	15-032	LG 287
7200435	15-160	LG 253
72023	15-221	LG 265
72052	15-190	LG 265
72081	15-192	LG 265
72098	15-193	LG 266
72130	15-194	LG 265
72131	15-195	LG 265
72231	15-200	LG 285
72238	15-201	LG 285
72242	15-202	LG 285
72258	15-222	LG 285
72260	15-205	LG 266
72345	15-208	LG 266
7235500	15-210	LG 266
72363	15-211	LG 266
72382	15-213	LG 286
7241500	15-215	LG 287
7241600	115-200	LG 287
7241700	15-216	LG 266
7241800	15-217	LG 287
7242000	15-179	LG 287
7275	33-320-0	LG 731
7277	33-332	LG 730
7314800	34-007	LG 826
7327800	34-023	LG 822
79-117	91-308	LG 467
8226	60-220	LG 708
8707900	07-400	LG 767
8763700	45-303	LG 804
8781800	91-239	LG 454
8781800	91-253	LG 415
8781851	91-239	LG 454
8781851	91-253	LG 415
886151	91-242	LG 371
88616	91-242	LG 371
8861600	91-242	LG 371
8898800	91-254	LG 456
8898900	91-239	LG 454
8898900	91-253	LG 415
8899100	91-239	LG 454
8899100	91-253	LG 415
8899100	92-159	LG 578
8899300	91-242	LG 371
8899800	91-244	LG 450
8899800	92-040	LG 369
89046	91-239	LG 454
89046	91-253	LG 415
8904651	91-239	LG 454
8904651	91-253	LG 415
89796	91-239	LG 454
89796	91-253	LG 415
8979600	91-239	LG 454
8979600	91-253	LG 415
8979600	92-159	LG 578
8979651	396-740*	LG 415
8979651	596-319*	LG 415
8979651	91-239	LG 454
8979651	91-253	LG 415
8979651	96-319*	LG 415
89838	91-254	LG 456
8983800	91-254	LG 456
8983851	91-254	LG 456
90812	91-239	LG 454
90812	91-253	LG 415
9081200	91-239	LG 454
9081200	91-253	LG 415
9081200	92-159	LG 578
9082400	92-158	LG 453
9225400	33-119-1	LG 734
9231	34-034	LG 821
9232700	33-120	LG 734
9232700	33-138	LG 738
9239400	82-041	LG 890
9240	15-218	LG 285
9245	45-002	LG 237
9246	45-002	LG 237
9246700	92-158	LG 453
92537	72-135	LG 1040
9253700	72-135	LG 1040
9266700	33-120	LG 734
9266700	33-138	LG 738
AM103052	45-303	LG 804
C046998	396-723*	LG 413
C046998	596-323*	LG 453
C046998	96-323*	LG 477
CO45205	72-737	LG 1045
D18036	91-308	LG 467
D18037	91-235	LG 461
D18086	92-207	LG 456
E-6247	33-119-1	LG 734
GDU10230	396-735*	LG 452
GDU10230	596-308*	LG 548
GDU10230	92-207	LG 456
GDU10230	96-308*	LG 456
GDU10231	396-806*	LG 453
GDU10231	596-817*	LG 371
GDU10231	91-235	LG 461
GDU10232	396-727*	LG 467
GDU10232	596-347*	LG 448
GDU10232	91-308	LG 467
GDU10232	96-347*	LG 387
PC005	91-308	LG 467
PL4207	91-308	LG 467
TCU18744	72-032	LG 1038
TCU18848	15-033	LG 287

X

* OREGON® Gator™ replacement blade

2019 OEM X-Reference

OEM No.	OREGON	Page
GRAZER		
900-5005	30-101	LG 179
GREAT DANE		
18032	78-300	LG 833
D118348	75-670	LG 288
D18004	15-452	LG 287
D18005	15-453	LG 287
D18006	15-454	LG 287
D18007	15-455	LG 287
D18030	82-328	LG 891
D18036	396-727*	LG 467
D18036	596-347*	LG 448
D18036	91-308	LG 467
D18036	96-347*	LG 387
D18037	396-726*	LG 391
D18037	596-344*	LG 495
D18037	91-235	LG 461
D18037	96-344*	LG 536
D18086	396-735*	LG 452
D18086	596-308*	LG 548
D18086	92-207	LG 456
D18086	96-308*	LG 456
D18087	15-457	LG 287
D18088	15-458	LG 287
D18090	33-024	LG 945
D18303	75-671	LG 287
D18348	75-670	LG 288
D18361	15-459	LG 288
D28028	75-242	LG 288
D28029	75-243	LG 288
D28030	15-460	LG 288
D28031	15-461	LG 288
D28125	15-462	LG 288
D28241	15-463	LG 288
D38085	33-027	LG 947
GDA10122	33-120	LG 734
GDA10122	33-138	LG 738
GDU10025	15-464	LG 288
GDU10228	15-465	LG 288
GDU10230	396-735*	LG 452
GDU10230	596-308*	LG 548
GDU10230	92-207	LG 456
GDU10230	96-308*	LG 456
GDU10231	396-726*	LG 391
GDU10231	596-344*	LG 495
GDU10231	91-235	LG 461
GDU10231	96-344*	LG 536
GDU10232	396-727*	LG 467
GDU10232	596-347*	LG 448
GDU10232	91-308	LG 467
GDU10232	96-347*	LG 387
TCU18847	15-466	LG 288
TCU18849	15-467	LG 288
GREEN MACHINE		
160611	49-812	LG 612
160612	49-816	LG 612
167218	55-342	LG 627
167304	55-820	LG 935
170133	55-333	LG 633
176304	55-800	LG 934
180601	49-812	LG 612
180602	55-342	LG 627
190025	55-252	LG 1019
190061	49-021	LG 629
190111	55-252	LG 1019
210036	49-812	LG 612
237001	40-140	LG 584
247223	49-020	LG 631
287204	55-342	LG 627
300285	43-685	LG 936
309891	55-231	LG 212
4467213	49-027	LG 769
467213	49-027	LG 769
467220	55-342	LG 627
760605	49-835	LG 611
H.W.I.		
754-0145	75-145	LG 300
754-0151	75-004	LG 301
754-0201	75-441	LG 334
754-0230	75-008	LG 301
754-0234	75-441	LG 334
754-0240	75-009	LG 301
754-0241	75-012	LG 301
754-0266	75-016	LG 301
754-0935	75-092	LG 304
954-0145	75-145	LG 300
954-0145A	75-145	LG 300
954-0151	75-004	LG 301
954-015A	75-145	LG 300
954-0201	75-441	LG 334
954-0230	75-008	LG 301
954-0234	75-441	LG 334
954-0240	75-009	LG 301
954-0241	75-012	LG 301
954-0241A	75-012	LG 301
954-0266	75-016	LG 301
954-0266A	75-016	LG 301
954-0935	75-092	LG 304
HABAN		
3042	34-023	LG 822
HAHN ECLIPSE		
451179	34-008	LG 821
451182	34-005	LG 821
451293	34-012	LG 821
HECHINGER CO.		
754-0145	75-145	LG 300
754-0151	75-004	LG 301
754-0201	75-441	LG 334
754-0230	75-008	LG 301
754-0234	75-441	LG 334
754-0240	75-009	LG 301
754-0241	75-012	LG 301
754-0266	75-016	LG 301
754-0293	75-018	LG 301
754-0935	75-092	LG 304
954-0145	75-145	LG 300
954-0145A	75-145	LG 300
954-0151	75-004	LG 301
954-015A	75-145	LG 300
954-0201	75-441	LG 334
954-0230	75-008	LG 301
954-0234	75-441	LG 334
954-0240	75-009	LG 301
954-0241	75-012	LG 301
954-0241A	75-012	LG 301
954-0266	75-016	LG 301
954-0266A	75-016	LG 301
954-0293	75-018	LG 301
954-0935	75-092	LG 304
HOFFCO		
211325S	55-252	LG 1019
211844H	49-026	LG 769
213125S	55-252	LG 1019
214802S	43-532	LG 936
215688S	55-807	LG 994
HOME DEPOT		
232408	92-615*	LG 491
261086	198-058	LG 517
261808	98-095	LG 521
269480	198-049	LG 518
525263	98-085	LG 561
HOMELITE		
00513	49-835	LG 611
01201	49-020	LG 631
01201	49-027	LG 769
03310	49-835	LG 611
04194	49-812	LG 612
06315	49-816	LG 612
08832-01	55-255	LG 1019
08832-02	55-256	LG 1019
110590	56-001	LG 687
1201	49-020	LG 631
1201	49-027	LG 769
12279	49-833	LG 611
12279-A	49-833	LG 611
12925	49-834	LG 611
174323	75-361	LG 254
17675	42-061	LG 1018
304393	75-120	LG 300
308044002	55-741	LG 1019
308055002	55-256	LG 1019
3310	49-835	LG 611
4194	49-812	LG 612
48533	49-833	LG 611
48533-A	49-833	LG 611
49422	07-200	LG 778
513	49-835	LG 611
587741	55-211	LG 191
6315	49-816	LG 612
63589-A	55-211	LG 191
63718	07-004	LG 769
63744 A	07-008	LG 762
63744A	07-008	LG 762
63745 A	07-008	LG 762
63745A	07-008	LG 762
64083	07-201	LG 779
64083-1	07-201	LG 779
64229	49-021	LG 629
64243	55-342	LG 627
64246	49-834	LG 611
65482	55-333	LG 633
67020	49-834	LG 611
67021	49-834	LG 611
67197	49-834	LG 611
67369	49-807	LG 611
67369-A	49-807	LG 611
67384	49-833	LG 611
68034	49-833	LG 611
68350	49-834	LG 611
69141	55-610	LG 191
69141D	55-610	LG 191
69254	56-001	LG 687
69254 1A	56-001	LG 687
69254 2	56-001	LG 687
69254-1	56-001	LG 687
69254-1A	56-001	LG 687
69434	49-833	LG 611
69451	07-004	LG 769
69634	49-834	LG 611
69635	49-834	LG 611
69681	55-207	LG 191
70202	49-833	LG 611
70203	49-807	LG 611
70310-98	07-266	LG 761
70343	49-833	LG 611
70655	49-833	LG 611
70679	49-834	LG 611
70809	49-834	LG 611
70811	49-810	LG 612
80220 2	56-001	LG 687
883201	55-255	LG 1019
883202	55-256	LG 1019
93006	49-810	LG 612
93195	49-833	LG 611
93195-A	49-833	LG 611
93197	49-833	LG 611
93197-A	49-833	LG 611
93198	49-833	LG 611
93198-A	49-833	LG 611
93200	49-833	LG 611
93200-B	49-833	LG 611
93203	49-833	LG 611
93205	49-833	LG 611
93205-A	49-833	LG 611
93214	49-833	LG 611
93293-A	49-833	LG 611
93753	49-833	LG 611
93758	49-833	LG 611
94056	49-833	LG 611
94061	49-833	LG 611
94061-A	49-833	LG 611
94275	49-833	LG 611
94549	49-816	LG 612
94549-B	49-816	LG 612
94550	49-812	LG 612
94701	49-807	LG 611
94702	49-833	LG 611
94876	49-810	LG 612
94877	49-834	LG 611
95341	49-833	LG 611
95688	49-833	LG 611
95894	49-814	LG 614
96443	49-816	LG 612
96444	49-812	LG 612
96543	49-816	LG 612
96625	49-816	LG 612
96639	07-200	LG 778
966391	07-200	LG 778
96943	49-816	LG 612
96944	49-812	LG 612
96986	49-831	LG 612
96986-A	49-831	LG 612
96988	49-812	LG 612
96989	49-816	LG 612
97133	49-814	LG 614
97136	49-833	LG 611
97519	49-816	LG 612
97768A	55-811	LG 933
97768-A	55-811	LG 933
97768-B	55-811	LG 933
97823	49-833	LG 611
97824	49-807	LG 611
97942	49-021	LG 629
98001	49-833	LG 611
98006	49-812	LG 612
98014	49-833	LG 611
98045	49-816	LG 612
98543	49-812	LG 612
98550-43	55-342	LG 627
98550-58	49-021	LG 629
98551-38	49-812	LG 612
98630	49-810	LG 612
98631	49-807	LG 611
98760	55-611	LG 192
98770A	55-813	LG 933
98866A	55-821	LG 988
98889	49-833	LG 611
A 00288	49-817-0	LG 616
A 00440	56-001	LG 687
A-00285	49-812	LG 612
A-00285-A	49-812	LG 612
A-00286-B	49-831	LG 612
A00288	49-817-0	LG 616
A00440	56-001	LG 687
A-00964	49-833	LG 611
A00982B	55-124	LG 771
A01195A	49-028	LG 769
A-02588	49-812	LG 612
A-02620	49-831	LG 612
A-02895	49-831	LG 612
A-02911	49-831	LG 612

X

* OREGON® Gator™ replacement blade

OEM No.	OREGON	Page
HOMELITE		
A03006	55-255	LG 1019
A-03034	49-831	LG 612
A-03310	49-835	LG 611
A-03878	49-831	LG 612
A-03920	49-816	LG 612
A-03921	49-816	LG 612
A-04041	49-812	LG 612
A-04042	49-831	LG 612
A-04298	49-816	LG 612
A-04656	49-816	LG 612
A24779	55-610	LG 191
A55373-A	33-208	LG 866
A65178	55-207	LG 191
A97910A	55-816	LG 988
A98064-11	49-829	LG 605
A-98551-36	49-812	LG 612
A-98551-37	49-816	LG 612
A98773	43-532	LG 936
AO3006	55-255	LG 1019
D 63589 B	55-211	LG 191
D 63589 C	55-211	LG 191
D04359	40-142	LG 584
D04359A	40-142	LG 584
D92702B	55-610	LG 191
D98760	55-611	LG 192
D-98760	55-611	LG 192
D98760B	55-611	LG 192
D-98760-B	55-611	LG 192
DA 65178 A	55-207	LG 191
DA 65178 B	55-207	LG 191
DA 98912	55-741	LG 1019
DA 98912 A	55-741	LG 1019
DA 98912 B	55-741	LG 1019
DA 98912 C	55-741	LG 1019
DA 98912 D	55-741	LG 1019
DA 98912 E	55-741	LG 1019
DA-03001-A	55-053	
DA04591A	55-053	
DA06486	07-024	LG 771
DA97910A	55-816	LG 988
DA98866	55-821	LG 988
DA98866A	55-821	LG 988
DA-98912	55-741	LG 1019
DA98912E	55-741	LG 1019
DA-98912E	55-741	LG 1019
DP153592	55-184	LG 1019
DP181767	07-022	LG 764
JA13064-1	33-024	LG 945
JA-518845	49-834	LG 611
JA-518846	49-810	LG 612
PS03117	55-811	LG 933
UP 00145	55-741	LG 1019
UP 00158	55-211	LG 191
UP 06807	55-211	LG 191
UP00106380	07-024	LG 771
UP00145	55-741	LG 1019
UP-00145	55-741	LG 1019
UP00158	55-211	LG 191
UP03209	55-816	LG 988
UP0387	07-200	LG 778
UP03871	07-200	LG 778
UP03916	49-170	LG 758
UP04091	55-811	LG 933
UP04117	55-255	LG 1019
UP04557	55-256	LG 1019
UP04802	49-027	LG 769
UP05460	55-811	LG 933
UP-05460	55-811	LG 933
UP06567	55-166	
UP-06567	55-166	
UP06763	55-821	LG 988
UP06764	55-816	LG 988
UP06765	40-142	LG 584
UP06807	55-211	LG 191
UP06862	07-004	LG 769
UP07287	07-008	LG 762
HONDA		
006111-ZH7-405	50-414	LG 751
06111ZE1405	50-418	LG 751
06111-ZE2-405	50-417	LG 751
06111-ZE2-408	50-417	LG 751
06111-ZE3-405	50-418	LG 751
06111-ZE0-405	50-414	LG 751
06111-ZF6-405	50-418	LG 751
06111-ZF6-406	50-419	LG 751
06111-ZF6-407	50-419	LG 751
06111-ZH7-405	50-414	LG 751
06111-ZH8-405	50-416	LG 751
0611-zh8-405	50-416	LG 751
06172-ZOA-305	30-704	LG 194
061A1-U01	50-417	LG 751
061A1-ZE0-000	50-414	LG 751
061A1-ZE0-000 GX120 LG 751		50-414
061A1-ZE0-010	50-414	LG 751
061A1-ZE1-010	50-415	LG 751
061A1-ZE1-T01	50-415	LG 751
061A1-ZE1-T01	50-416	LG 751
061A1-ZE2-I01	50-417	LG 751
061A1-ZE2-U01	50-417	LG 751
061A1-ZE3-T01	50-418	LG 751
061A1-ZF6-000	50-419	LG 751
061A1-ZF6-V00	50-419	LG 751
06720-V10-030	73-048	LG 846
06720-V-10-030	73-048	LG 846
08170-ZE7-000	30-401	LG 193
08170-ZG9-M00	30-709	LG 194
08170-ZG9-M00	30-828	LG 194
08170-ZG9-M01	30-709	LG 194
08720-VE2-000	91-516	LG 457
08720-VE2-000	91-517	LG 457
1 601 0-883-01 5	49-815	LG 626
1003375	73-006	LG 846
1003391	73-006	LG 846
1007483	30-400	LG 193
100748-3	30-400	LG 193
1021518	30-403	LG 192
102518	30-403	LG 192
1067149	30-933	LG 195
11381-ZE2-000	50-452	LG 753
11381-ZE2-306	50-452	LG 753
11381-ZE2-309	50-452	LG 753
11381-ZE2-800	50-452	LG 753
11381-ZE2-801	50-452	LG 753
11381-ZE3-001	50-455	LG 753
11381-ZH8-800	50-450	LG 753
11381-ZH8-801	50-450	LG 753
12200-ZF6-406	36-531	LG 755
12200-ZH9-405	36-535	LG 755
12251-ZE1-800	50-556	LG 753
12251-ZE2-000	50-553	LG 752
12251-ZE2-800	50-553	LG 752
12251ZE2801	50-553	LG 752
12251-ZE3-000	50-554	LG 753
12251-ZE3-000	50-555	LG 753
12251-ZE3-800	50-554	LG 753
12251-ZE3-W00	50-554	LG 753
12251ZE3W01	50-554	LG 753
12251-ZE6-000	50-428	LG 752
12251-ZF1-000	50-556	LG 753
12251-ZF1-800	50-556	LG 753
12251-ZF6-W00	50-555	LG 753
12251ZF6W01	50-555	LG 753
12391-ZE1-000	50-432	LG 753
12391-ZE2-000	50-431	LG 753
12391-ZE2-010	50-431	LG 753
12391-ZE2-020	50-431	LG 753
12391-ZE7-M10	50-433	LG 753
12391-ZE7-T00	50-433	LG 753
1239300	30-963	LG 195
13010-Z1T-003	36-043	LG 754
13010-ZE1-013	36-042	LG 754
13010-ZE2-013	36-044	LG 754
13010-ZE2-014	36-044	LG 754
13010-ZE2-921	36-044	LG 754
13010-ZE3-003	36-045	LG 754
13010-ZE6-013	36-041	LG 754
13010-ZF1-023	36-043	LG 754
13010-ZF6-003	36-046	LG 754
13010-ZL0-003	36-043	LG 754
130A1-ZE1-003	36-043	LG 754
130A1-ZE6-003	36-041	LG 754
13101-ZE1-000	36-243	LG 754
13101-ZE2-010	36-244	LG 754
13101-ZE2-W00	36-244	LG 754
13101-ZE3-000	36-245	LG 754
13101-ZE3-W00	36-245	LG 754
13101-ZF6-W00	36-246	LG 754
13101-ZF7-010	36-243	LG 754
13200-Z0S-800	36-140	LG 755
13200Z0T800	36-141	LG 755
13200-Z0T-800	36-141	LG 755
13200Z1C900	36-143	LG 755
13200-Z1C-900	36-143	LG 755
13200-Z1D-000	36-142	LG 755
13200-ZE0-000	36-140	LG 755
13200-ZE1-000	36-141	LG 755
13200-ZE1-010	36-141	LG 755
13200-ZE2-000	36-142	LG 755
13200-ZE2-010	36-142	LG 755
13200-ZE3-010	36-143	LG 755
13200ZE3020	36-143	LG 755
13200-ZE3-020	36-143	LG 755
1384445	83-301	LG 816
1445782	30-404	LG 192
14711-Z0J-000	36-524	LG 755
14711-Z0J-800	36-524	LG 755
14711-ZE2-000	36-523	LG 755
14711-ZE3-000	36-325	LG 755
14711-ZF1-000	36-521	LG 755
14711-ZL8-000	36-524	LG 755
14721-ZE3-000	36-326	LG 755
14721-ZF1-000	36-522	LG 755
1488790	30-318	LG 193
149590	30-400	LG 193
1495902	30-400	LG 193
149590-2	30-400	LG 193
15400-679-023	83-301	LG 816
15400-PFB-004	83-000	LG 815
15400-PFB-014	83-000	LG 815
15400-PJ7-015	83-000	LG 815
15400-PLM-A01PE	83-302	LG 816
15400-PM3-004	83-000	LG 815
15400-POH-305	83-301	LG 816
15400-PR3-004	83-301	LG 816
15400-ZJ1-004	83-302	LG 816
15410-MJO-003	83-301	LG 816
15410-MJO-004	83-301	LG 816
15410-MJO-405	83-301	LG 816
15410-ZJ4-999AH	83-301	LG 816
15510-ZE1-003	33-541	LG 950
15510-ZE1-013	33-541	LG 950
15510-ZE1-023	33-541	LG 950
15510-ZE1-033	33-541	LG 950
15510-ZE1-043	33-541	LG 950
15510-ZE2-033	33-540	LG 950
15510-ZE2-043	33-540	LG 950
15510-ZE2-053	33-540	LG 950
15600-735-003	50-453	LG 756
15600-ZE1-000	49-196	LG 756
15600-ZE1-003	49-196	LG 756
15600-ZG4-003	50-454	LG 756
16010-883-005	49-815	LG 626
16010-883-015	49-986	LG 627
16010-ZE0-015	49-312	LG 605
16010-ZE0-025	49-312	LG 605
16010-ZE1-811	49-325	LG 605
16010-ZE1-812	49-325	LG 605
16011-ZA0-931	49-997	LG 628
16011-ZAO-931	49-997	LG 628
16011-ZEO-005	49-996	LG 629
16013-883-005	49-913	LG 624
16013-Z0S-B01	49-911	LG 624
16013-ZA0-005	49-911	LG 624
16013ZA0-065	49-993	LG 624
16013-ZA0-065	49-993	LG 624
16013-ZA0-931	49-912	LG 624
16013-ZA0-931	49-992	LG 624
16013-ZAO-931	49-992	LG 624
16013-ZE0-005	49-993	LG 624
16013-ZEO-065	49-993	LG 624
16015-892-505	49-985	LG 625
16015-ZE0-811	49-994	LG 625
16015-ZE0-831	49-995	LG 625
16015-ZE0-831	49-999	LG 626
16015-ZE1-811	49-995	LG 625
16015-ZE1-831	49-995	LG 625
16015-ZEO-811	49-994	LG 625
16100-ZE2-W70	50-634	LG 597
16100-ZE2-W71	50-634	LG 597
16100-ZE3-V01	49-915	LG 597
16100-ZE6-W00	50-635	LG 596
16100-ZE6-W01	50-635	LG 596
16100-ZE7-W20	50-636	LG 596
16100-ZE7-W21	50-636	LG 596
16100-ZF2-V00	50-637	LG 597
16100-ZF2-V01	50-637	LG 597
16100-ZF6-V00	50-637	LG 597
16100-ZF6-V01	50-634	LG 597
16100-ZF6-V01	50-637	LG 597
16100-ZH7-W51	50-673	LG 597
16100-ZH8-W50	50-638	LG 596
16100-ZH8-W51	50-638	LG 596
16100-ZH8-W61	50-638	LG 596
16100-ZH8-W61	50-668	LG 597
16100-ZH9-W20	50-669	LG 597
16100-ZH9-W21	50-669	LG 597
16100-ZK9-R61	50-674	LG 597
16100-ZL0-W51	50-670	LG 597
16100-ZLO-W51	50-670	LG 597
16211-ZE1-000	49-233	LG 601
16211-ZE2-000	49-234	LG 601
16211-ZE2-010	49-236	LG 601
16211-ZE2-W00	49-236	LG 601
16212-ZE7-M10	49-181	LG 752
16212-ZG9-J60	49-182	LG 752
16212-ZH8-800	49-183	LG 752
16212-ZL8-000	50-420	LG 751
16220-ZA0-701	49-184	LG 752
16220-ZA0-702	49-184	LG 752
16220-ZAO-702	49-184	LG 752
16220-ZE1-020	49-185	LG 752
16220-ZE6-010	49-186	LG 751
16221-883-800	50-421	LG 751
16221-Z0H-000	49-324	LG 752
16221-ZA0-800	49-187	LG 752
16221-ZF6-800	49-189	LG 752
16221-ZH8-801	49-190	LG 752
16223-ZA0-700	49-191	LG 752
16223-ZA0-800	49-191	LG 752
16223-ZAO-800	49-191	LG 752
16223-ZE3-W00	49-192	LG 752
16223-ZE3-WOO	49-192	LG 752
16228-ZL8-000	50-422	LG 751
1622-ZAO-800	49-187	LG 752
16576-891-000	46-304	LG 723
166028	46-306	LG 708
16610-ZE1-000	49-914	LG 165

X

* OREGON® Gator™ replacement blade

2019 OEM X-Reference

HONDA

OEM No.	OREGON	Page
1688217	45-295	LG 232
16950-ZG9-M02	07-409	LG 766
16955-ZE1-000	07-129	LG 774
16955-ZE1-000	07-393	LG 765
16956-ZE1-000	07-129	LG 774
17010-ZJ1-000	30-437	LG 192
17011-ZJ1-000	30-437	LG 192
17200-ZE7-003	30-401	LG 193
17200-ZE7-013	30-401	LG 193
17210-759-013	30-703	LG 192
17210-890-505	30-403	LG 192
17210-Z1V-003	30-187	LG 192
17210-Z1V-003	30-401	LG 193
17210-ZA0-506	30-317	LG 194
17210-ZE0-505	30-318	LG 193
17210-ZE0-505	30-816	LG 193
17210-ZE0-822	30-318	LG 193
17210-ZE0-822	30-816	LG 193
17210-ZE1-505	30-404	LG 192
17210-ZE1-505	30-802	LG 192
17210-ZE1-505	69-023	LG 192
17210-ZE1-507	30-404	LG 192
17210-ZE1-517	30-404	LG 192
17210-ZE1-517	30-802	LG 192
17210-ZE1-517	69-023	LG 192
17210-ZE1-820	30-404	LG 192
17210-ZE1-820	30-802	LG 192
17210-ZE1-820	69-023	LG 192
17210-ZE1-821	30-404	LG 192
17210-ZE1-821	30-802	LG 192
17210-ZE1-822	30-404	LG 192
17210-ZE1-822	30-802	LG 192
17210-ZE1-822	69-023	LG 192
17210-ZE2-505	30-406	LG 193
17210-ZE2-505	30-805	LG 193
17210-ZE2-505	69-030	LG 193
17210-ZE2-515	30-406	LG 193
17210-ZE2-515	30-805	LG 193
17210-ZE2-821	30-406	LG 193
17210-ZE2-821	30-805	LG 193
17210-ZE2-822	30-406	LG 193
17210-ZE2-822	30-805	LG 193
17210-ZE2-882	30-406	LG 193
17210-ZE3-000	30-417	LG 193
17210-ZE3-000	30-806	LG 193
17210-ZE3-000	69-007	LG 193
17210-ZE3-003	30-403	LG 192
17210-ZE3-010	30-417	LG 193
17210-ZE3-010	30-806	LG 193
17210-ZE3-010	69-007	LG 193
17210-ZE3-505	30-417	LG 193
17210-ZE3-505	30-806	LG 193
17210-ZE3-505	69-007	LG 193
17210-ZE6-003	30-400	LG 193
17210-ZE6-003	30-808	LG 193
17210-ZE6-505	30-400	LG 193
17210-ZE6-505	30-808	LG 193
17210-ZE7-003	30-187	LG 192
17210-ZE7-003	30-401	LG 193
17210-ZE7-013	30-187	LG 192
17210-ZE7-013	30-401	LG 193
17210-ZE7-505	30-187	LG 192
17210-ZE7-505	30-401	LG 193
17210-ZE8-003	30-405	LG 193
17210-ZE8-013	30-405	LG 193
17210-ZE8-820	30-318	LG 193
17210-ZE8-820	30-816	LG 193
17210-ZE0-822	30-318	LG 193
17210-ZF5-010	30-405	LG 193
17210-ZF5-505	30-405	LG 193
17210-ZJ1-841	30-436	LG 194
17210-ZJ1-842	30-436	LG 194
17211-888-013	30-400	LG 193
17211-888-013	30-808	LG 193
17211-890-003	30-403	LG 192
17211-890-013	30-403	LG 192
17211-890-023	30-403	LG 192
17211-899-000	30-963	LG 195
17211-Z37-W03	30-015	LG 194
17211-ZA0-702	30-317	LG 194
17211-ZAO-702	30-317	LG 194
17211-ZB2-000	30-345	LG 195
17211-ZE1-000	30-346	LG 195
17211-ZE1-003	30-704	LG 194
17211-ZE7-W01	30-015	LG 194
17211-ZE7-W01	30-401	LG 193
17211-ZE7-W01	30-843	LG 194
17211-ZE7-W02	30-015	LG 194
17211-ZE7-W02	30-401	LG 193
17211-ZE7-W02	30-843	LG 194
17211-ZE7-W03	30-015	LG 194
17211-ZE7-W03	30-401	LG 193
17211-ZE7-W03	30-843	LG 194
17211-ZE7-WO3	30-015	LG 194
17211-ZE8-000	30-347	LG 194
17211-ZE8-000	30-832	LG 194
17211-ZF5-V01	30-064	LG 194
17211-ZF5-W01	30-064	LG 194
17211-ZG9-800	30-027	LG 194
17211-ZG9-M00	30-709	LG 194
17211-ZG9-M00	30-828	LG 194
17211-ZG9-MOO	30-709	LG 194
17211-ZL8-000	30-347	LG 194
17211-ZL8-000	30-710	LG 181
17211-ZL8-000	69-347	LG 194
17211-ZL8-003	30-347	LG 194
17211-ZL8-003	30-710	LG 181
17211-ZL8-003	30-832	LG 194
17211-ZL8-003	69-347	LG 194
17211-ZL8-023	30-347	LG 194
17211-ZL8-023	30-832	LG 194
17211-ZL8-023	69-347	LG 194
17211-ZOA-013	30-704	LG 194
17211-ZOA-13	30-704	LG 194
17217-ZJ1-840	30-436	LG 194
17218-888-003	30-933	LG 195
17218-Z0A-810	30-451	LG 196
17218-ZE0-505	30-453	LG 195
17218-ZE0-821	30-453	LG 195
17218-ZE1-505	30-506	LG 195
17218-ZE1-507	30-506	LG 195
17218-ZE1-821	30-506	LG 195
17218-ZE2-505	30-934	LG 195
17218-ZE2-821	30-934	LG 195
17218-ZE3-000	30-454	LG 195
17218-ZE3-505	30-417	LG 193
17218-ZE3-505	30-454	LG 195
17218-ZE3-505	30-806	LG 193
17218-ZE6-505	30-933	LG 195
17218-ZEO-821	30-506	LG 195
17218-ZF5-505	30-405	LG 193
17218-ZG9-800	30-027	LG 194
17218-ZG9-800	30-452	LG 195
17218-ZG9-M00	30-709	LG 194
17218-ZG9-M00	30-828	LG 194
17218-ZG9-M00	30-932	LG 196
17218-ZG9-M00	30-933	LG 195
17218-ZG9-MOO	30-932	LG 196
17218-ZG9-MOO	30-933	LG 195
17218-ZJ1-000	30-437	LG 192
17218-ZJ1-840	30-455	LG 196
17218-ZOA-000	30-704	LG 194
17218-ZOA-810	30-704	LG 194
17220-ZM0-000	30-438	LG 196
17230-ZE1-820	30-332	LG 196
17230-ZE3-W01	30-334	LG 196
17231-ZE3-W01	30-334	LG 196
17231-ZM0-000	30-438	LG 196
172-ZE3-010	30-417	LG 193
175064	95-057	LG 380
17510-ZE1-020ZA	07-600	LG 770
17510-ZE1-030ZA	07-600	LG 770
17510-ZE2-010ZA	07-601	LG 770
17510-ZE2-020ZA	07-601	LG 770
17510-ZE2-10ZA	07-601	LG 770
17510-ZE2-20ZA	07-601	LG 770
17510-ZE3-010ZA	07-602	LG 770
17510-ZE3-020ZA	07-602	LG 770
17510-ZE3-20ZA	07-602	LG 770
176200-ZH7-013	55-125	LG 771
17620-ZE2-W00	55-126	LG 771
17620-ZE7-000	07-318	LG 771
17620-ZH7-023	07-319	LG 771
17620-ZH7-023	55-125	LG 771
17620-ZL8-003	07-025	LG 771
1762-ZE2-W01	07-118	LG 777
17672-880-000	07-118	LG 777
17672-ZE2-W01	07-118	LG 777
17910-VA3-003	46-306	LG 708
17910-VA3-S01	46-306	LG 708
18310-ZE2-W00	35-034	LG 807
18310-ZE2-W00	35-043	LG 808
18310ZE2W01	35-034	LG 807
18310-ZE2-W61	35-036	LG 807
18310-ZE2-W61	35-044	LG 808
18310-ZF1-000	35-038	LG 808
18310-ZLO-000	35-041	LG 808
18310-ZM0-000	35-037	LG 808
18320-ZE2-W01	35-034	LG 807
18320-ZE2-W61	35-036	LG 807
18320-ZE2-W61	35-043	LG 808
18320-ZE3-W01	35-044	LG 808
18320-ZF1-H01	35-041	LG 808
18320-ZF1-HO1	35-041	LG 808
18330-ZH9-N00	35-045	LG 808
18333-ZK6-Y00	50-426	LG 753
18333-ZK6-YOO	50-426	LG 753
18381-ZE2-800	50-423	LG 753
18381-ZE2-W10	50-423	LG 753
18381-ZH6-800	50-425	LG 753
18381-ZH8-800	50-425	LG 753
18381ZH8801	49-183	LG 752
18381ZH8801	50-425	LG 753
18381-ZH8-801	50-425	LG 753
18381-ZL8-305	49-143	LG 752
2090207	30-405	LG 193
2107993	30-417	LG 193
2107993	30-806	LG 193
2289734	30-401	LG 193
23510-VB5-801	51-223	LG 726
23510-VB5-803	51-223	LG 726
23520-VB5-801	51-224	LG 726
23520-VB5-803	51-224	LG 726
2450740	33-735	LG 917
2535029	30-506	LG 195
2538429	30-934	LG 195
25641-ZE4-003	83-010	LG 819
25641-ZE4-003	83-400	LG 819
274162	30-401	LG 193
2741627	30-187	LG 192
2741627	30-401	LG 193
2801595	91-291	LG 457
28400-883-040ZB	31-020	LG 923
28400-KL8-013ZA	31-066	LG 923
28400-Z0D-V02ZC	31-920	LG 922
28400-Z0D-V03ZC	31-920	LG 922
28400-Z0D-V04ZC	31-920	LG 922
28400-Z0L-V20ZB	31-066	LG 923
28400-ZE1-003ZA	31-020	LG 923
28400-ZE1-003ZF	31-020	LG 923
28400-ZE2-W01ZA	31-049	LG 923
28400-ZE2-W01ZB	31-049	LG 923
28400-ZE2-W01ZN	31-049	LG 923
28400-ZE3-W01ZA	31-060	LG 922
28400-ZE3-W01ZP	31-060	LG 922
28400-ZE3-W02ZP	31-060	LG 922
28400-ZE7-M02	31-070	LG 922
28400-ZG9-802	31-070	LG 922
28400-ZG9-803	31-070	LG 922
28400-ZH8-013ZA	31-052	LG 923
28400-ZH8-023YA	31-052	LG 923
28400-ZL8-013ZA	31-066	LG 923
28400-ZMO-013ZA	31-066	LG 923
28400-ZZL8-023ZA	31-066	LG 923
28410-ZH8-003YA	31-075	LG 923
28410-ZH8-023YA	31-075	LG 923
28410-ZH8-023ZB	31-075	LG 923
28410-ZH8-023ZG	31-075	LG 923
28415-ZG9-802	31-081	LG 936
28418-ZG9-802	31-081	LG 936
28420-ZE2-W01	31-034	LG 933
28420-ZH8-003	31-023	LG 933
28421-ZE3-W01	31-034	LG 933
28422-ZE2-W01	31-083	LG 930
28422-ZH8-013	31-025	LG 930
28422-ZH8-013	31-058	LG 931
28433-ZH-003	31-027	LG 931
28433-ZH8-003	31-027	LG 931
28433-ZH8-003	31-058	LG 931
28441-ZH8-003	31-058	LG 931
28442-ZE2-W01	31-083	LG 930
28442-ZE2-W01	43-426	LG 936
28442-ZH8-003	43-425	LG 936
28443-ZE2-W01	31-087	LG 930
28443-ZH8-003	31-058	LG 931
28451-ZE3-A02	31-037	LG 928
28451-ZH7-801	31-013	LG 928
28451-ZH8-003	31-026	LG 928
28461-ZE1-003	31-910	LG 929
28461-ZE1-013	31-910	LG 929
28461-ZG0-004	31-911	LG 929
28461-ZGO-004	31-911	LG 929
28461-ZH8-003	31-912	LG 929
28461ZH8013	31-912	LG 929
28486-ZE6-T02	31-090	LG 930
289387	30-318	LG 193
2893873	30-318	LG 193
289388	30-404	LG 192
2893881	30-404	LG 192
289389	30-406	LG 193
2893899	30-406	LG 193
289390	30-417	LG 193
2893907	30-417	LG 193
289392	30-317	LG 194
2893923	30-317	LG 194
289393	30-403	LG 192
2893931	30-403	LG 192
291072	30-405	LG 193
2910727	30-405	LG 193
30500-ZE1-023	33-348	LG 785
30500-ZE1-033	33-348	LG 785
30500-ZE1-043	33-348	LG 785
30500-ZE1-053	33-348	LG 785
30500-ZE1-063	33-348	LG 785
30500-ZE1-073	33-348	LG 785
30500-ZE2-023	33-521	LG 785
30500-ZE7-033	33-520	LG 785
30500-ZE7-043	33-520	LG 785
30500-ZE7-063	33-520	LG 785
30500-ZF6-W02	33-521	LG 785
30500-ZG9-801	33-520	LG 785
30500-ZG9-M02	33-522	LG 785
30500-ZL8-004	33-151	LG 785
30500-ZL8-014	33-151	LG 785
30700-ZE1-000	33-215	LG 866
30700-ZE1-013	33-215	LG 866
30700-ZJ1-003	33-216	LG 866
30700-ZJ1-841	33-216	LG 866
31200-ZJ1-841	33-734	LG 917

X

* OREGON® Gator™ replacement blade

OEM No.	OREGON	Page
HONDA		
31200-ZJ4-831	33-733	LG 917
31200-ZJ4-832	33-733	LG 917
31201-890-003	49-193	LG 756
31201-ZE3-004	49-207	LG 756
31210-ZE1-013	33-735	LG 917
31210-ZE1-023	33-741	LG 917
31210-ZE3-013	33-735	LG 917
31210ZE3023	33-735	LG 917
31210-ZE3-023	33-735	LG 917
31210-ZE6-651	33-741	LG 917
32100-ZJ1-842	33-734	LG 917
32100-ZJ1-H01	33-734	LG 917
34150-ZH7-003	33-542	LG 950
34150-ZH7-013	33-542	LG 950
35100-772-003	33-386	LG 942
3510-772-003	33-386	LG 942
36100-883-005	33-013	LG 949
36100-ZE1-015	33-013	LG 949
3678877	31-083	LG 930
3678901	31-087	LG 930
3682036	35-045	LG 808
3683703	35-038	LG 808
3979929	31-090	LG 930
4010062	30-709	LG 194
4010070	30-709	LG 194
4010070	30-932	LG 196
42661-VE2-800	51-225	LG 725
42700-VK6-020ZA	72-169	LG 1033
42710-VE2-M01ZE	72-170	LG 1033
432391	30-027	LG 194
4327383	30-027	LG 194
44710-VG3-000	72-052	LG 1033
44710-VL0-L01ZB	72-172	LG 1033
4527453	30-401	LG 193
4527479	30-709	LG 194
4581476	33-522	LG 785
4589693	33-348	LG 785
4640843	35-044	LG 808
4644811	35-041	LG 808
4684098	35-043	LG 808
4956579	30-437	LG 192
5038781	83-301	LG 816
5152491	50-638	LG 596
5168273	30-317	LG 194
517693	50-636	LG 596
5185855	30-400	LG 193
5189725	50-635	LG 596
5196308	30-934	LG 195
5213293	30-933	LG 195
5222120	49-915	LG 597
5222211	50-634	LG 597
5222211	50-637	LG 597
5247408	30-404	LG 192
5248299	30-405	LG 193
5252697	30-417	LG 193
5252697	30-806	LG 193
5266721	30-406	LG 193
5272802	30-506	LG 195
5273032	30-318	LG 193
5281449	30-417	LG 193
5281449	30-806	LG 193
5310289	30-401	LG 193
5311089	30-403	LG 192
53125-VA4-K10	81-015	LG 802
5357389	30-015	LG 194
5357389	30-401	LG 193
5357399	30-015	LG 194
5357399	30-843	LG 194
54510-VB5-800	46-302	LG 709
54510-VG4-C01	46-336	LG 709
54630-VK6-010	46-333	LG 709
5580402	30-347	LG 194
5580444	30-438	LG 196
5753595	30-064	LG 194
6145353	35-036	LG 807
6224653	30-436	LG 194
6224661	30-436	LG 194
63125-VA4-K10	81-015	LG 802
665265	30-704	LG 194
6672448	73-048	LG 846
6672448	73-049	LG 847
6718159	30-347	LG 194
6813166	73-048	LG 846
7032428	33-521	LG 785
7120397	30-436	LG 194
7199227	33-520	LG 785
72511-960-000	90-651*	LG 457
72511-960-000	91-291	LG 457
72511-960-004	90-651*	LG 457
72511-960-004	91-291	LG 457
72511-960-020	90-651*	LG 457
72511-960-020	91-444	LG 457
72511-VA2-690	90-651*	LG 457
72511-VA2-690	91-291	LG 457
72511-VA4-000	90-651*	LG 457
72511-VA4-000	91-291	LG 457
72511-VE2-000	91-516	LG 457
72511-VG4-K00	91-516	LG 457
72511-VK6-000	92-101	LG 458
72521-730-003	73-006	LG 846
72531-VE2-000	91-517	LG 457
72531-VE2-010	91-517	LG 457
72531-VE2-020	91-517	LG 457
72531-VK6-000	92-102	LG 458
72531-VK6-010	92-102	LG 458
72552-730-003	73-006	LG 846
7399280	30-704	LG 194
7399306	30-704	LG 194
75211-960-020	91-444	LG 457
76153-736-010	73-825	LG 850
76322-747-A10	73-824	LG 847
76322-V10-010	73-049	LG 847
7698475	83-302	LG 816
785600	30-436	LG 194
7869555	92-102	LG 458
787226	30-437	LG 192
81310-758-S00	86-036	LG 781
876904	45-004	LG 235
90003-ZH8-003	31-028	LG 928
90004-ZE2-W01	31-032	LG 928
90102-732-010	80-017	LG 852
91102-VA4-003	45-295	LG 232
91102VA4013	45-259	LG 224
91131-ZH8-801	50-450	LG 753
91201-889-003	49-206	LG 755
91201-890-003	49-193	LG 756
91201-Z0T-801	49-208	LG 756
91201-ZE3-004	49-207	LG 756
91201-ZG9-U71	49-194	LG 755
91202-883-005	49-208	LG 756
91252-888-003	49-194	LG 755
95001-45140-40	07-060	LG 762
95001-45200-40S	07-060	LG 762
95001-45222-40	07-061	LG 762
95001-45300-40S	07-061	LG 762
96150-60020-10	45-004	LG 235
961506204010	45-259	LG 224
Code 0876904	45-004	LG 235
CODE 1007483	30-400	LG 193
CODE 1021518	30-403	LG 192
CODE 1067149	30-933	LG 195
CODE 1239300	30-963	LG 195
CODE 1445782	30-404	LG 192
CODE 1488790	30-318	LG 193
CODE 1495902	30-400	LG 193
CODE 2090207	30-405	LG 193
CODE 2107993	30-417	LG 193
CODE 2107993	30-806	LG 193
CODE 2289734	30-401	LG 193
CODE 2538429	30-934	LG 195
CODE 2741627	30-187	LG 192
CODE 2741627	30-401	LG 193
CODE 2893873	30-318	LG 193
CODE 2893881	30-404	LG 192
CODE 2893899	30-406	LG 193
CODE 2893907	30-417	LG 193
CODE 2893923	30-317	LG 194
CODE 2893931	30-403	LG 192
CODE 2910727	30-405	LG 193
CODE 4010062	30-709	LG 194
CODE 4010070	30-709	LG 194
CODE 4010070	30-933	LG 195
CODE 432391	30-027	LG 194
CODE 4327383	30-027	LG 194
CODE 4527479	30-709	LG 194
CODE 4956579	30-437	LG 192
CODE 5168273	30-317	LG 194
CODE 5185855	30-400	LG 193
CODE 5196308	30-934	LG 195
CODE 5213293	30-933	LG 195
CODE 5247408	30-404	LG 192
CODE 5248299	30-405	LG 193
CODE 5252697	30-417	LG 193
CODE 5252697	30-806	LG 193
CODE 5266721	30-406	LG 193
CODE 5272802	30-506	LG 195
CODE 5273032	30-318	LG 193
CODE 5281449	30-417	LG 193
CODE 5281449	30-806	LG 193
CODE 5310289	30-401	LG 193
CODE 5311089	30-403	LG 192
CODE 5357389	30-015	LG 194
CODE 5357389	30-401	LG 193
CODE 5357399	30-015	LG 194
CODE 5580402	30-347	LG 194
CODE 5580444	30-438	LG 196
CODE 5753595	30-064	LG 194
CODE 6224653	30-436	LG 194
CODE 6224661	30-436	LG 194
CODE 665265	30-704	LG 194
CODE 6718159	30-347	LG 194
CODE 7120397	30-436	LG 194
CODE 7399280	30-704	LG 194
CODE 7399306	30-704	LG 194
E-3019	30-318	LG 193
E-4513	30-406	LG 193
M2100-576-91938	90-651*	LG 457
M2100-576-91938	91-291	LG 457
VE2-020	91-517	LG 457
HOWARD PRICE		
02-425	33-028	LG 947
09-058	33-015	LG 948
6033	83-300	LG 819
HOWDEN HARDWARE		
754-0145	75-145	LG 300
754-0151	75-004	LG 301
754-0935	75-092	LG 304
954-0145	75-145	LG 300
954-0145A	75-145	LG 300
954-0151	75-004	LG 301
954-015A	75-145	LG 300
954-0935	75-092	LG 304
HUFFMAN		
10890	34-002	LG 821
24392	34-008	LG 821
HUFFY		
9992	34-031	LG 821
HUSKEE		
11285	91-005	LG 458
11285	96-041*	LG 372
11370	91-005	LG 458
11370	96-041*	LG 372
1137059	91-005	LG 458
1137059	96-041*	LG 372
HUSQVARNA		
100026	75-269	LG 252
100140M	95-014	LG 374
100140M	95-607*	LG 397
100340	396-716*	LG 451
100340	596-310*	LG 447
100340	96-310*	LG 444
100340	99-127	LG 375
100341	396-726*	LG 391
100341	596-344*	LG 495
100341	91-256	LG 437
100341	96-344*	LG 536
100669K	95-015	LG 400
101366	396-716*	LG 451
101366	596-310*	LG 447
101366	96-310*	LG 444
101366	99-127	LG 375
101485	396-726*	LG 391
101485	596-344*	LG 495
101485	91-256	LG 437
101485	96-344*	LG 536
102603	33-115	LG 738
103274	95-058	LG 458
104360X	34-046	LG 824
105313X	78-043	LG 824
106634	95-015	LG 400
106634X	95-015	LG 400
106635X	95-014	LG 374
106635X	95-607*	LG 397
106734	05-020	LG 913
110411	15-472	LG 259
110832	15-473	LG 288
112053	195-072	LG 530
112053	595-605*	LG 422
112053	95-605*	LG 463
112529	15-474	LG 288
114886	95-023	LG 380
114886	95-073	LG 533
120262X	95-034	LG 377
120626X	95-034	LG 377
121263X	95-031	LG 377
121658X	82-680	LG 870
121705X	82-495	LG 870
121798X	95-027	LG 398
122265X	95-014	LG 374
122265X	95-607*	LG 397
123431X	95-031	LG 377
123713X	05-020	LG 913
126338X	95-034	LG 377
127783	34-049	LG 824
12784	195-033	LG 400
12784	595-601*	LG 400
12784	95-601*	LG 423
127841	595-613*	LG 463
127841	95-036	LG 463
127841	95-613*	LG 463
127842	195-033	LG 400
127842	595-601*	LG 400
127842	95-601*	LG 423
127843	195-032	LG 425
127843	596-900*	LG 380
127843	96-900*	LG 526
129206	44-371	LG 834
129861	44-370	LG 834
130652	595-614*	LG 459
130652	95-006	LG 397
130652	95-045	LG 374
130652	95-614*	LG 375
130861	46-325	LG 701

X

2019 OEM X-Reference

HUSQVARNA

OEM No.	OREGON	Page
131264	75-097	LG 289
131322	195-033	LG 400
131322	595-601*	LG 400
131322	95-601*	LG 423
131494	34-046	LG 824
133107	60-105	LG 702
133346	595-024*	LG 465
133346	95-051	LG 465
133348	195-021	LG 468
133348	595-602*	LG 403
133348	95-602*	LG 403
134148	195-003	LG 400
134148	595-601*	LG 400
134148	95-601*	LG 423
134148M	195-003	LG 400
134148M	595-601*	LG 400
134148M	95-601*	LG 423
134148X	195-003	LG 400
134148X	595-601*	LG 400
134148X	95-601*	LG 423
134149	195-005	LG 373
134768	195-021	LG 468
134768	595-602*	LG 403
134768	95-602*	LG 403
134871	595-024*	LG 465
134871	95-051	LG 465
136572	44-302	LG 841
137380	595-609*	LG 461
137380	95-018	LG 399
137380	95-609*	LG 376
138496	595-613*	LG 463
138496	95-036	LG 463
138496	95-613*	LG 463
138497	195-003	LG 400
138497	595-601*	LG 400
138497	95-601*	LG 423
138498	195-032	LG 425
138498	596-900*	LG 380
138498	96-900*	LG 526
138791	195-032	LG 425
138791	596-900*	LG 380
138791	96-900*	LG 526
138970	195-033	LG 400
138970	595-601*	LG 400
138970	95-601*	LG 423
138971	195-032	LG 425
138971	596-900*	LG 380
138971	96-900*	LG 526
139245	34-049	LG 824
139774	195-003	LG 400
139774	595-601*	LG 400
139774	95-601*	LG 423
139775	195-019	LG 466
14035	72-162	LG 1038
141114	195-021	LG 468
141114	595-602*	LG 403
141114	95-602*	LG 403
143969	95-034	LG 377
143978	95-031	LG 377
143978X	95-031	LG 377
144767	595-614*	LG 459
144767	95-052	LG 398
144767	95-614*	LG 375
145106	595-024*	LG 465
145106	95-051	LG 465
145708	595-614*	LG 459
145708	95-045	LG 374
145708	95-614*	LG 375
145755	46-322	LG 701
145755	60-103	LG 702
146323	46-322	LG 701
146749	95-024	LG 465
146749	95-051	LG 465
148763	175-170	LG 290
148763	75-170	LG 290
150340	72-001	LG 1031
150340	72-003	LG 1031
150340	72-077	LG 1031
150340	72-458	LG 1031
150341	72-139	LG 1032
152202	195-021	LG 468
152202	595-602*	LG 403
152202	95-602*	LG 403
152443	595-614*	LG 459
152443	95-045	LG 374
152443	95-614*	LG 375
153532	44-371	LG 834
153535	44-370	LG 834
156468	95-018	LG 399
156493	78-053	LG 824
156577	60-108	LG 703
156581	60-108	LG 703
15703	95-045	LG 374
15703	95-052	LG 398
157033	595-614*	LG 459
157033	95-052	LG 398
157033	95-614*	LG 375
157101	195-021	LG 468
157101	595-602*	LG 403
157101	95-602*	LG 403
159267	195-067	LG 380
159267	95-071	LG 402
159705	595-614*	LG 459
159705	95-052	LG 398
159705	95-614*	LG 375
162778	60-107	LG 703
163819	595-614*	LG 459
163819	95-045	LG 374
163819	95-614*	LG 375
165746	72-312	LG 1038
165833	95-057	LG 380
165833	95-071	LG 402
168552	60-108	LG 703
169022	05-022	LG 913
169676	60-525	LG 702
170698	595-614*	LG 459
170698	95-052	LG 398
170698	95-614*	LG 375
173435	44-371	LG 834
173436	44-370	LG 834
173437	78-054	LG 824
173438	34-046	LG 824
173901	78-053	LG 824
173920	195-062	LG 376
173920	596-615*	LG 529
173920	96-615*	LG 461
173921	95-068	LG 376
174873	72-031	LG 1038
175064	95-057	LG 380
175064	95-071	LG 402
175067	60-525	LG 702
175820	78-052	LG 824
176066	72-313	LG 1038
176084	595-614*	LG 459
176084	95-052	LG 398
176084	95-614*	LG 375
176135	95-057	LG 380
176135	95-071	LG 402
176556	60-107	LG 703
177284	78-051	LG 824
177865	44-370	LG 834
177968	78-013	LG 825
178138	115-029	LG 255
179114	78-056	LG 825
179748	05-021	LG 913
180054	195-062	LG 376
180054	596-615*	LG 529
180054	96-615*	LG 461
180459	595-622*	LG 468
180459	95-057	LG 380
180767	72-014	LG 1031
180773	72-076	LG 1031
180775	72-001	LG 1031
180775	72-077	LG 1031
182158	60-000	LG 702
183281	60-110	LG 703
183567	60-109	LG 703
184058	78-014	LG 825
184588	46-322	LG 701
184588	60-103	LG 702
184596	46-322	LG 701
187254	195-072	LG 530
187254	595-605*	LG 422
187254	95-605*	LG 463
187255	595-605*	LG 422
187255	95-082	LG 372
187255	95-605*	LG 463
187256	195-072	LG 530
187256	595-605*	LG 422
187256	95-605*	LG 463
188606	72-162	LG 1038
189028	195-067	LG 380
189028	95-057	LG 380
189028	95-071	LG 402
189182	60-104	LG 702
189403	76-039	LG 1037
189993	78-014	LG 825
191273	75-810	LG 257
192682	595-602*	LG 403
192682	95-073	LG 533
192682	95-602*	LG 403
192870	82-026	LG 872
193144	72-001	LG 1031
193144	72-003	LG 1031
193144	72-077	LG 1031
193144	72-458	LG 1031
1935957	595-024*	LG 465
1935957	95-024	LG 465
193957	195-003	LG 400
193957	595-601*	LG 400
193957	95-601*	LG 423
194231X427	72-033	LG 1031
194231X460	72-138	LG 1032
195945	78-062	LG 835
197257	60-526	LG 702
204114-884	595-024*	LG 465
204114-884	95-044	LG 465
204335256	195-021	LG 468
204335256	595-602*	LG 403
204335256	95-602*	LG 403
204-3352-56	195-021	LG 468
204-3352-56	595-602*	LG 403
204-3352-56	95-602*	LG 403
204340218	595-024*	LG 465
204340218	95-044	LG 465
24541	595-605*	LG 422
24541	95-082	LG 372
24541	95-605*	LG 463
24676	195-005	LG 373
24692	195-003	LG 400
24692	595-601*	LG 400
24692	95-601*	LG 423
25034	95-014	LG 374
25034	95-607*	LG 397
25034R	95-014	LG 374
25034R	95-607*	LG 397
25036	95-015	LG 400
25036R	95-015	LG 400
33255	95-024	LG 465
33255	95-051	LG 465
33256	195-021	LG 468
33256	595-602*	LG 403
33256	95-602*	LG 403
335256	95-023	LG 380
335256	95-073	LG 533
33954	195-072	LG 530
33954	595-605*	LG 422
33954	95-605*	LG 463
340218	595-024*	LG 465
340218	95-044	LG 465
358130861	46-325	LG 701
364400	55-342	LG 627
364500	55-343	LG 627
403107	596-370*	LG 427
403107	95-074	LG 533
403107	96-370*	LG 533
405380	195-070	LG 469
405380	596-370*	LG 427
405380	96-370*	LG 533
406706	95-057	LG 380
406706	95-071	LG 402
406707	595-602*	LG 403
406707	95-073	LG 533
406707	95-602*	LG 403
406712	195-067	LG 380
406712	95-057	LG 380
406712	95-071	LG 402
406713	595-602*	LG 403
406713	95-023	LG 380
406713	95-602*	LG 403
407755X427	72-136	LG 1032
407755X460	72-137	LG 1032
407816	60-102	LG 702
408714	60-526	LG 702
419273	595-807*	LG 382
419273X431	595-807*	LG 382
419274	595-807*	LG 382
420463	95-076	LG 404
420463	95-615*	LG 426
421825	95-076	LG 404
421825	95-615*	LG 426
422719	195-005	LG 373
435111	60-526	LG 702
440855	60-101	LG 702
50 15 204 01	43-540	LG 936
50 17 631 01	43-562	LG 936
501 28 59-01	07-071	LG 1020
501 485 402	33-213	LG 787
501 58 42-01	33-158	LG 949
501 76 31-01	43-562	LG 936
501 80 71-05	30-148	LG 198
501285901	07-071	LG 1020
501285902	07-071	LG 1020
501485402	33-204	LG 787
501485402	33-213	LG 787
5014854-02	33-204	LG 787
5014854-02	33-213	LG 787
501-485-402	33-204	LG 787
501503402	72-001	LG 1031
501503402	72-077	LG 1031
501520401	43-540	LG 936
501-5204-01	43-540	LG 936
501520402	43-540	LG 936
501526602	33-180	LG 949
501584201	33-158	LG 949
501-6661-01	55-342	LG 627
501763101	43-562	LG 936
501-7631-01	43-562	LG 936
501807101	30-148	LG 198
501807105	30-148	LG 198
501877601	07-213	LG 777
5018776-01	07-213	LG 777
501-8776-01	07-213	LG 777
501877602	07-213	LG 777
5018776-02	07-213	LG 777
501-8776-02	07-213	LG 777
502161801	07-213	LG 777
5021618-01	07-213	LG 777
502-1681-01	07-213	LG 777

X

* OREGON® Gator™ replacement blade

OEM No.	OREGON	Page
HUSQVARNA		
503 09 83-01	33-158	LG 949
503 09 83-02	33-158	LG 949
503 10 24-05	31-002	LG 933
503 22 00-01	04-008	LG 686
503 44 32-01	07-213	LG 777
503 44 72-03	30-124	LG 197
503 54 39-01	31-004	LG 929
503 71 79-01	33-180	LG 949
503 71 82-01	33-158	LG 949
503 717 901	33-180	LG 949
503 7179 01	33-180	LG 949
503 775 301	55-168	LG 933
503 911 802	55-164	LG 1020
503089702	33-180	LG 949
503-08-97-021	33-180	LG 949
503098301	33-158	LG 949
503098302	33-158	LG 949
503102403	31-002	LG 933
503102405	31-002	LG 933
5031024-05	31-002	LG 933
503220001	04-008	LG 686
5032200-01	04-008	LG 686
503443201	07-213	LG 777
503-4432-01	07-213	LG 777
503447203	30-124	LG 197
503447204	30-124	LG 197
503509701	07-071	LG 1020
503-5837-01	49-020	LG 631
503-5971-01	49-020	LG 631
503620201	33-254	LG 785
503620202	33-254	LG 785
503620203	33-254	LG 785
503717901	33-180	LG 949
503-71-79-01	33-180	LG 949
503718201	33-157	LG 738
503718201	33-158	LG 949
503753-01	55-168	LG 933
503775301	55-168	LG 933
5037753-01	55-168	LG 933
503848202	40-141	LG 585
503-85-39-01	31-004	LG 929
503901401	33-254	LG 785
503911802	55-164	LG 1020
5039118-02	55-164	LG 1020
503917901	33-180	LG 949
504364400	55-342	LG 627
505175301	40-141	LG 585
505289963	40-502	LG 586
505-3167-31	55-342	LG 627
505-3167-64	55-342	LG 627
506 07 05-20	75-724	LG 310
506 26 41-01	07-213	LG 777
506 26 41-11	07-213	LG 777
506033033	15-477	LG 288
506070520	75-724	LG 310
506169002	33-254	LG 785
506269101	30-170	LG 198
506-26-91-01	30-170	LG 198
506342723	75-724	LG 310
506347420	75-724	LG 310
506372703	75-724	LG 310
506372720	75-724	LG 310
506668701	96-349*	LG 458
506676501	96-349*	LG 458
50668701	96-349*	LG 458
507432582	55-342	LG 627
510417801	595-085*	LG 462
510417801	95-085	LG 462
510417901	195-048	LG 430
510417901	596-900*	LG 380
510417901	96-900*	LG 526
512258301	195-062	LG 376
512258301	596-615*	LG 529
512258301	96-615*	LG 461
513897001	195-033	LG 400
513897001	595-601*	LG 400
513897001	95-601*	LG 423
521981501	595-085*	LG 462
521981601	596-900*	LG 380
521981601	96-900*	LG 526
522037401	595-087*	LG 417
522829301	396-727*	LG 467
522829301	596-347*	LG 448
522829301	96-347*	LG 387
522936601	396-727*	LG 467
522936601	596-347*	LG 448
522936601	96-347*	LG 387
525341101	396-731*	LG 427
525525901	95-095*	LG 463
525544701	396-731*	LG 427
530-0351-78	55-342	LG 627
531 30 73-92	83-503	LG 818
531-0024-36	49-020	LG 631
531002513	80-018	LG 852
531004044	40-141	LG 585
531005011	96-349*	LG 458
531005085	195-005	LG 373
5310053007	40-141	LG 585
531007562	75-099	LG 262
531300233	40-141	LG 585
531300765	195-067	LG 380
531301252	195-021	LG 468
531301252	595-602*	LG 403
531301252	95-602*	LG 403
531307212	595-024*	LG 465
531307212	95-044	LG 465
531307214	195-021	LG 468
531307214	595-602*	LG 403
531307214	95-602*	LG 403
531307220	195-003	LG 400
531307220	595-601*	LG 400
531307220	95-601*	LG 423
531307221	195-033	LG 400
531307221	595-601*	LG 400
531307221	95-601*	LG 423
531307223	195-005	LG 373
531307224	195-032	LG 425
531307224	596-900*	LG 380
531307224	96-900*	LG 526
531307235	95-071	LG 402
531307236	195-021	LG 468
531307236	595-602*	LG 403
531307236	95-602*	LG 403
531307237	195-021	LG 468
531307237	595-602*	LG 403
531307237	95-602*	LG 403
531309715	596-370*	LG 427
531309715	95-074	LG 533
531309715	96-370*	LG 533
532 10 90-81	33-334	LG 730
532 10 90-81	33-335	LG 730
532 10 90-81	33-336	LG 730
532 10 97-48	33-317-0	LG 729
532 10 99-46	33-334	LG 730
532 10 99-46	33-335	LG 730
532 10 99-46	33-336	LG 730
532 13 84-06	33-334	LG 730
532 13 84-06	33-335	LG 730
532 13 84-06	33-336	LG 730
532 14 61-54	33-334	LG 730
532 14 61-54	33-335	LG 730
532 14 61-54	33-336	LG 730
532 15 03-40	72-001	LG 1031
532 15 03-40	72-077	LG 1031
532 18 07-75	72-001	LG 1031
532 18 07-75	72-077	LG 1031
532 19 31-44	72-001	LG 1031
532 19 31-44	72-003	LG 1031
532 19 31-44	72-077	LG 1031
532 19 31-44	72-458	LG 1031
532025034	95-014	LG 374
532025034	95-607*	LG 397
5320868-70	72-456	LG 1036
532-0869-43	72-456	LG 1036
532102914	33-317-0	LG 729
532106085	75-107	LG 254
532106635	95-014	LG 374
532106635	95-607*	LG 397
532106734	05-020	LG 913
532109081	33-335	LG 730
532109748	33-317-0	LG 729
532109946	33-334	LG 730
532109946	33-335	LG 730
532-1099-46	33-331	LG 730
532110832	33-335	LG 730
532110883	75-108	LG 289
532110884	75-194	LG 289
532114884	595-024*	LG 465
532114884	95-044	LG 465
532121263	95-015	LG 400
532121263	95-031	LG 377
532121798	95-027	LG 398
532122265	95-014	LG 374
532122265	95-607*	LG 397
532123713X	05-020	LG 913
532124970	75-890	LG 289
532125907	75-151	LG 308
532125907	75-171	LG 289
532126338	95-034	LG 377
532126520	75-935	LG 255
532127783	34-049	LG 824
532127841	595-613*	LG 463
532127841	95-036	LG 463
532127841	95-613*	LG 463
532127842	195-033	LG 400
532127842	595-601*	LG 400
532127842	95-601*	LG 423
532129206	44-371	LG 834
532129277	595-024*	LG 465
532129277	95-051	LG 465
532129861	44-370	LG 834
532130652	595-614*	LG 459
532130652	95-006	LG 397
532130652	95-045	LG 374
532130652	95-614*	LG 375
532130794	82-014	LG 871
532130794	82-225	LG 871
532130801	75-167	LG 289
532130861	46-325	LG 701
532130969	75-106	LG 261
532131264	75-097	LG 289
532131290	75-099	LG 262
532131290	75-936	LG 290
532131322	595-601*	LG 400
532131322	95-047	LG 378
532131322	95-601*	LG 423
532131323	195-048	LG 430
532131323	596-900*	LG 380
532131323	96-900*	LG 526
532131494	34-046	LG 824
532132801	75-889	LG 252
532133035	75-890	LG 289
532133107	60-105	LG 702
532133346	595-024*	LG 465
532133346	95-051	LG 465
532133957	72-094	LG 1042
532134148	195-003	LG 400
532134148	595-601*	LG 400
532134148	95-601*	LG 423
532134149	195-005	LG 373
532134768	195-021	LG 468
532134768	595-602*	LG 403
532134768	95-602*	LG 403
532134871	595-024*	LG 465
532134871	95-051	LG 465
532136572	44-302	LG 841
532136818	82-680	LG 870
532136819	82-680	LG 870
532137078	75-164	LG 262
532137153	175-195	LG 289
532137153	75-195	LG 254
532137380	595-609*	LG 461
532137380	95-018	LG 399
532137380	95-609*	LG 376
532138255	75-167	LG 289
532138406	33-335	LG 730
532-1384-06	33-331	LG 730
532138496	595-613*	LG 463
532138496	95-027	LG 398
532138496	95-036	LG 463
532138496	95-613*	LG 463
532138497	195-033	LG 400
532138497	595-601*	LG 400
532138497	95-601*	LG 423
532138498	195-032	LG 425
532138498	596-900*	LG 380
532138498	96-900*	LG 526
532138969	595-613*	LG 463
532138969	95-036	LG 463
532138969	95-613*	LG 463
532138970	195-033	LG 400
532138970	595-601*	LG 400
532138970	95-601*	LG 423
532138971	195-032	LG 425
532138971	596-900*	LG 380
532138971	96-900*	LG 526
532139245	34-049	LG 824
532139573	175-169	LG 290
532139573	75-169	LG 290
532139774	195-003	LG 400
532139774	595-601*	LG 400
532139774	95-601*	LG 423
532139775	195-019	LG 466
532140218	75-196	LG 290
532140294	175-000	LG 262
532140294	75-000	LG 262
532-1404-01	33-099	LG 946
532141114	195-021	LG 468
532141114	595-602*	LG 403
532141114	95-602*	LG 403
532143651	82-510	LG 872
532-143651	82-510	LG 872
532143669	95-034	LG 377
532143969	95-034	LG 377
532143978	95-031	LG 377
532144200	75-099	LG 262
532144200	75-936	LG 290
532144767	595-614*	LG 459
532144767	95-052	LG 398
532144767	95-614*	LG 375
532144959	175-197	LG 290
532144959	75-197	LG 262
532145106	595-024*	LG 465
532145106	95-051	LG 465
532145673	33-334	LG 730
532145708	595-614*	LG 459
532145708	95-045	LG 374
532145708	95-614*	LG 375
532145755	46-322	LG 701
532145755	60-103	LG 702
532146154	33-334	LG 730
532146154	33-335	LG 730
532146323	46-322	LG 701
532146527	75-164	LG 262
532148763	75-170	LG 290
532150341	72-139	LG 1032
532152202	195-021	LG 468
532152202	595-602*	LG 403
532152202	95-602*	LG 403

X

* OREGON® Gator™ replacement blade

2019 OEM X-Reference

OEM No.	OREGON	Page
HUSQVARNA		
532152443	595-614*	LG 459
532152443	95-045	LG 374
532152443	95-614*	LG 375
532153532	44-371	LG 834
x532153535	44-370	LG 834
532156493	78-053	LG 824
532156581	60-108	LG 703
532157033	595-614*	LG 459
532157033	95-052	LG 398
532157033	95-614*	LG 375
532157353	595-614*	LG 459
532157353	95-052	LG 398
532157353	95-614*	LG 375
532157769	75-164	LG 262
532159267	95-071	LG 402
532159705	595-614*	LG 459
532159705	95-052	LG 398
532159705	95-614*	LG 375
532160855	75-167	LG 289
532160899	33-112	LG 735
532162778	60-107	LG 703
532163819	95-045	LG 374
532163819	95-052	LG 398
532165632	75-897	LG 262
532165746	72-312	LG 1038
532165833	95-057	LG 380
532166060	75-911	LG 262
532168552	60-108	LG 703
532169676	60-525	LG 702
532170698	595-614*	LG 459
532170698	95-052	LG 398
532170698	95-614*	LG 375
532173435	44-371	LG 834
532173436	44-370	LG 834
532173437	78-054	LG 824
532173901	78-053	LG 824
532173920	195-062	LG 376
532173920	596-615*	LG 529
532173920	96-615*	LG 461
532173921	596-615*	LG 529
532173921	95-068	LG 376
532174356	82-015	
532174358	82-015	
532174368	175-912	LG 291
532174368	75-912	LG 255
532174873	72-031	LG 1038
532174883	175-913	LG 262
532174883	75-913	LG 291
532175064	595-621*	LG 467
532175064	95-057	LG 380
532175064	95-071	LG 402
532175064	95-621*	LG 402
532175067	60-525	LG 702
532175436	75-914	LG 291
532175820	78-052	LG 824
532176066	72-313	LG 1038
532176084	595-614*	LG 459
532176084	95-052	LG 398
532176084	95-614*	LG 375
532176135	95-057	LG 380
532176135	95-071	LG 402
532176556	60-107	LG 703
532177865	44-370	LG 834
532177968	78-013	LG 825
532178138	15-029	LG 291
532179114	78-056	LG 825
532179748	05-021	LG 913
532179831	76-076	LG 727
532180054	195-062	LG 376
532180054	596-615*	LG 529
532180054	96-615*	LG 461
532180459	595-622*	LG 468
532180459	95-057	LG 380
532180767	72-014	LG 1031
532180773	72-076	LG 1031
532180775	72-077	LG 1031
532180808	175-654	LG 263
532180808	75-654	LG 263
532183281	60-110	LG 703
532183567	60-109	LG 703
532184058	78-014	LG 825
532184588	46-322	LG 701
532184588	60-103	LG 702
532184590	65-002	LG 340
532184596	46-322	LG 701
53218724	78-051	LG 824
532187254	195-072	LG 530
532187254	595-605*	LG 422
532187254	95-605*	LG 463
532187255	595-605*	LG 422
532187255	95-082	LG 372
532187255	95-605*	LG 463
532187256	195-072	LG 530
532187256	595-605*	LG 422
532187256	95-605*	LG 463
532187292	82-026	LG 872
532188606	72-162	LG 1038
5321886-06	72-162	LG 1038
532189028	195-067	LG 380
532189028	95-057	LG 380
532189182	60-104	LG 702
532189993	78-014	LG 825
532191273	175-810	LG 263
532191273	75-810	LG 257
532192507	33-334	LG 730
532192682	595-602*	LG 403
532192682	95-073	LG 533
532192682	95-602*	LG 403
532192870	82-026	LG 872
532193144	72-001	LG 1031
532193144	72-003	LG 1031
532193144	72-077	LG 1031
532193144	72-458	LG 1031
532193214	75-892	LG 255
532193707	65-002	LG 340
532193957	195-003	LG 400
532193957	595-601*	LG 400
532193957	95-024	LG 465
532193957	95-601*	LG 423
532196103	115-205	LG 258
532196103	75-893	LG 263
532196857	15-020	LG 291
532197242	175-894	LG 291
532197242	75-894	LG 263
532197253	15-021	LG 256
532197253	175-895	LG 263
532197253	75-895	LG 263
532197257	60-526	LG 702
532355256	195-021	LG 468
532355256	595-602*	LG 403
532355256	95-602*	LG 403
532403107	596-370*	LG 427
532403107	95-074	LG 533
532403107	96-370*	LG 533
532405143	15-022	LG 292
532405380	195-070	LG 469
532405380	596-370*	LG 427
532405380	96-370*	LG 533
532406707	595-602*	LG 403
532406707	95-073	LG 533
532406707	95-602*	LG 403
532406712	195-067	LG 380
532406712	195-089	LG 467
532406712	595-621*	LG 467
532406712	95-057	LG 380
532406712	95-071	LG 402
532406712	95-621*	LG 402
532-40-67-12	95-071	LG 402
532406713	595-602*	LG 403
532406713	95-023	LG 380
532406713	95-602*	LG 403
532407816	60-102	LG 702
532408714	60-526	LG 702
532419271	75-935	LG 255
532419273	595-807*	LG 382
532419274	595-807*	LG 382
532420097	65-008	LG 340
532420463	95-076	LG 404
532420463	95-615*	LG 426
532421825	95-076	LG 404
532421825	95-615*	LG 426
532422719	195-005	LG 373
532428460	60-101	LG 702
532429636	15-023	LG 256
532435111	60-526	LG 702
532437601	95-076	LG 404
532437601	95-615*	LG 426
532440855	60-101	LG 702
532700972	595-024*	LG 465
532700972	95-051	LG 465
532751646	595-024*	LG 465
532751646	95-051	LG 465
532752233	595-024*	LG 465
532752233	95-044	LG 465
532752234	195-021	LG 468
532752234	595-602*	LG 403
532752234	95-602*	LG 403
532850972	595-024*	LG 465
532850972	95-024	LG 465
532850973	595-602*	LG 403
532850973	95-023	LG 380
532850973	95-602*	LG 403
532851462	60-000	LG 702
532851463	60-000	LG 702
535126520	75-935	LG 255
537 07 95-01	56-022	LG 686
537040421	56-022	LG 686
537-0404-21	56-022	LG 686
537044102	56-022	LG 686
537079501	56-022	LG 686
537079502	56-022	LG 686
539 10 29-14	33-317-0	LG 729
539100026	75-269	LG 252
539100340	396-716*	LG 451
539100340	596-310*	LG 447
539100340	96-310*	LG 444
539100340	99-127	LG 375
539100341	396-726*	LG 391
539100341	596-344*	LG 495
539100341	91-256	LG 437
539100341	96-344*	LG 536
539101366	396-716*	LG 451
539101366	596-310*	LG 447
539101366	96-310*	LG 444
539101366	99-127	LG 375
539101485	396-726*	LG 391
539101485	596-344*	LG 495
539101485	91-256	LG 437
539101485	96-344*	LG 536
539101733	396-727*	LG 467
539101733	596-347*	LG 448
539101733	91-308	LG 467
539101733	96-347*	LG 387
539101956	75-269	LG 252
539102093	396-727*	LG 467
539102093	596-347*	LG 448
539102093	91-308	LG 467
539102093	96-347*	LG 387
539102603	33-115	LG 738
539103274	95-058	LG 458
539103687	75-819	LG 292
539105476	396-731*	LG 427
539105571	396-731*	LG 427
539105571	92-169	LG 497
539105711	396-727*	LG 467
539105711	596-347*	LG 448
539105711	95-078	LG 496
539105711	96-347*	LG 387
539105712	396-726*	LG 391
539105712	596-344*	LG 495
539105712	91-256	LG 437
539105712	96-344*	LG 536
539105714	396-727*	LG 467
539105714	596-347*	LG 448
539105714	96-347*	LG 387
539106038	95-058	LG 458
539106040	396-716*	LG 451
539106040	596-310*	LG 447
539106040	96-310*	LG 444
539106040	99-127	LG 375
539106041	396-716*	LG 451
539106041	596-310*	LG 447
539106041	96-310*	LG 444
539107519	195-062	LG 376
539107519	596-615*	LG 529
539107519	96-615*	LG 461
539107610	72-094	LG 1042
539109756	396-716*	LG 451
539109756	596-310*	LG 447
539109756	96-310*	LG 444
539110324	195-003	LG 400
539110324	595-601*	LG 400
539110324	95-601*	LG 423
539110410	15-024	LG 292
539110411	15-472	LG 259
539110460	195-005	LG 373
539110745	396-731*	LG 427
539110832	15-473	LG 288
539110859	75-269	LG 252
539111878	195-067	LG 380
539111878	95-057	LG 380
539111949	75-819	LG 292
539112053	195-072	LG 530
539112053	595-605*	LG 422
539112053	95-605*	LG 463
539112078	595-088*	LG 458
539112078	95-084	LG 494
539112078	95-088*	LG 458
539112079	595-085*	LG 462
539112079	95-085	LG 462
539112529	15-474	LG 288
539112787	595-621*	LG 467
539112787	95-057	LG 380
539112787	95-621*	LG 402
539113312	596-900*	LG 380
539113312	95-086	LG 425
539113312	96-900*	LG 526
539113425	595-087*	LG 417
539113425	95-087	LG 460
53911342529	595-087*	LG 417
53911342529	95-087	LG 460
539114557	15-129	LG 292
544018401	33-254	LG 785
544080204	595-024*	LG 465
544080204	95-024	LG 465
544175710	396-800*	LG 464
544175810	396-798*	LG 469
544889702	55-164	LG 1020
55139204	595-024*	LG 465
55139204	95-024	LG 465
573953001	595-088*	LG 458
573953001	95-088*	LG 458
574292401	195-072	LG 530
574292401	595-605*	LG 422
574292401	95-605*	LG 463
574481401	396-731*	LG 427
574860902	396-731*	LG 427
574860902	92-169	LG 497
574870801	595-077*	LG 461

* OREGON® Gator™ replacement blade

HUSQVARNA

OEM No.	OREGON	Page
574870801	95-077	LG 461
575157101	195-021	LG 468
575157101	595-602*	LG 403
575157101	95-602*	LG 403
575164601	595-024*	LG 465
575164601	95-051	LG 465
575240701	595-077*	LG 461
575265901	95-092	LG 423
575937901	195-070	LG 469
575937901	596-370*	LG 427
575937901	96-370*	LG 533
575938201	195-062	LG 376
575938201	596-615*	LG 529
575938201	96-615*	LG 461
575938301	195-062	LG 376
575938301	596-615*	LG 529
575938301	96-615*	LG 461
575938401	195-072	LG 530
575938401	595-605*	LG 422
575938401	95-605*	LG 463
575938501	595-605*	LG 422
575938501	95-082	LG 372
575938501	95-605*	LG 463
577146101	595-088*	LG 458
577146101	95-088*	LG 458
577146201	195-062	LG 376
577146201	596-615*	LG 529
577146201	96-615*	LG 461
577203116	75-167	LG 289
577240301	595-085*	LG 462
577240301	95-085	LG 462
577240401	596-900*	LG 380
577240401	95-086	LG 425
577240401	96-900*	LG 526
580244001	95-615*	LG 426
580258101	195-067	LG 380
580258101	595-621*	LG 467
580258101	95-621*	LG 402
580258102	195-067	LG 380
580258102	595-621*	LG 467
580258102	95-621*	LG 402
581055502	95-092	LG 423
581116301	195-003	LG 400
581116301	595-601*	LG 400
581116301	95-601*	LG 423
581116302	195-003	LG 400
581116302	195-033	LG 400
581694101	195-067	LG 380
581694101	595-621*	LG 467
581694101	95-057	LG 380
581694101	95-621*	LG 402
582931401	595-602*	LG 403
582931401	95-073	LG 533
582931401	95-602*	LG 403
584451901	175-810	LG 263
584451901	75-810	LG 257
584453101	15-022	LG 292
585587701	95-615*	LG 426
58618102	595-623*	LG 466
586230101	195-032	LG 425
586230101	596-900*	LG 380
586230101	96-900*	LG 526
586859601	195-093	LG 466
586918101	595-623*	LG 466
586918101	95-623	LG 466
586918102	95-623	LG 466
601000391	78-021	LG 832
601001974	40-502	LG 586
601002454	40-502	LG 586
69229	595-024*	LG 465
69229	95-024	LG 465
700417	60-004	LG 701
700953	72-001	LG 1031
700953	72-003	LG 1031
700953	72-077	LG 1031
700953	72-458	LG 1031
700973	195-021	LG 468
700973	595-602*	LG 403
700973	95-602*	LG 403
701211	595-024*	LG 465
701211	95-024	LG 465
701213	595-602*	LG 403
701213	95-023	LG 380
701213	95-602*	LG 403
701575	72-003	LG 1031
701575	72-458	LG 1031
7133203	595-024*	LG 465
7133203	95-024	LG 465
7133219	595-602*	LG 403
7133219	95-023	LG 380
7133219	95-602*	LG 403
7133269	195-021	LG 468
7133269	595-602*	LG 403
7133269	95-602*	LG 403
751646	595-024*	LG 465
751646	95-051	LG 465
752233	595-024*	LG 465
752233	95-044	LG 465
752234	195-021	LG 468
752234	595-602*	LG 403
752234	95-602*	LG 403
77193957	595-024*	LG 465
77193957	95-024	LG 465
777134149	195-005	LG 373
777187256	195-072	LG 530
777187256	595-605*	LG 422
777187256	95-605*	LG 463
777193957	195-003	LG 400
777193957	595-601*	LG 400
777193957	95-601*	LG 423
777405380	195-070	LG 469
777405380	596-370*	LG 427
777405380	96-370*	LG 533
777419274	595-807*	LG 382
850972	595-024*	LG 465
850972	95-024	LG 465
8509725	595-024*	LG 465
8509725	95-024	LG 465
850973	595-602*	LG 403
850973	95-023	LG 380
850973	95-602*	LG 403
851462	60-000	LG 702
917063	33-114	LG 734
917121263X	95-031	LG 377
917121263XMS	95-031	LG 377
917122265X	95-014	LG 374
91712265X	95-014	LG 374
91712265X	95-607*	LG 397
917126338X	95-034	LG 377
917127842	195-033	LG 400
917127842	595-601*	LG 400
917127842	95-601*	LG 423
917127843	195-032	LG 425
917127843	596-900*	LG 380
917127843	96-900*	LG 526
917129277	595-024*	LG 465
917129277	95-051	LG 465
917130652MS	95-006	LG 397
917131322	595-601*	LG 400
917131322	95-047	LG 378
917131322	95-601*	LG 423
917131323	195-032	LG 425
917131323	596-900*	LG 380
917131323	96-900*	LG 526
917131694	595-024*	LG 465
917131694	95-051	LG 465
917134148MS	195-003	LG 400
917134148MS	595-601*	LG 400
917134148MS	95-601*	LG 423
917134148X	195-003	LG 400
917134148X	595-601*	LG 400
917134148X	95-601*	LG 423
917137380MS	595-609*	LG 461
917137380MS	95-018	LG 399
917137380MS	95-609*	LG 376
917137380P	595-609*	LG 461
917137380P	95-018	LG 399
917137380P	95-609*	LG 376
917138489MS	195-032	LG 425
917138489MS	596-900*	LG 380
917138489MS	96-900*	LG 526
917138497MS	195-033	LG 400
917138497MS	595-601*	LG 400
917138497MS	95-601*	LG 423
917138970	195-033	LG 400
917138970	595-601*	LG 400
917138970	95-601*	LG 423
917139774	195-003	LG 400
917139774	595-601*	LG 400
917139774	95-601*	LG 423
917139774MS	195-003	LG 400
917139774MS	595-601*	LG 400
917139774MS	95-601*	LG 423
917139775P	195-019	LG 466
917144767	595-614*	LG 459
917144767	95-052	LG 398
917144767	95-614*	LG 375
917145106CS	595-024*	LG 465
917145106CS	95-051	LG 465
917145708	95-045	LG 374
917145708CS	595-614*	LG 459
917145708CS	95-045	LG 374
917145708CS	95-614*	LG 375
917145708MS	595-614*	LG 459
917145708MS	95-045	LG 374
917145708MS	95-614*	LG 375
917145755	60-103	LG 702
917150340	72-001	LG 1031
917150340	72-003	LG 1031
917150340	72-077	LG 1031
917150340	72-458	LG 1031
917152443P	595-614*	LG 459
917152443P	95-045	LG 374
917152443P	95-614*	LG 375
917157033	595-614*	LG 459
917157033	95-052	LG 398
917157033	95-614*	LG 375
917157101	195-021	LG 468
917157101	595-602*	LG 403
917157101	95-602*	LG 403
917163819	595-614*	LG 459
917163819	95-045	LG 374
917163819	95-614*	LG 375
917169676	60-525	LG 702
917170698	595-614*	LG 459
917170698	95-052	LG 398
917170698	95-614*	LG 375
917173920	195-062	LG 376
917173920	596-615*	LG 529
917173920	96-615*	LG 461
917175064	95-057	LG 380
917175064PB	95-057	LG 380
917176135	95-057	LG 380
917180767	72-014	LG 1031
917187254	195-072	LG 530
917187254	595-605*	LG 422
917187254	95-605*	LG 463
917192682	595-602*	LG 403
917192682	95-073	LG 533
917192682	95-602*	LG 403
917192682X431	595-602*	LG 403
917192682X431	95-073	LG 533
917192682X431	95-602*	LG 403
917197257	60-526	LG 702
91724676	195-005	LG 373
91724691	95-015	LG 400
91730652MS	595-614*	LG 459
91730652MS	95-045	LG 374
91730652MS	95-614*	LG 375
91733219	595-602*	LG 403
91733219	95-023	LG 380
91733219	95-602*	LG 403
91733256	195-021	LG 468
91733256	595-602*	LG 403
91733256	95-602*	LG 403
91733269	195-021	LG 468
91733269	595-602*	LG 403
91733269	95-602*	LG 403
917408714	60-526	LG 702
917532121263	95-031	LG 377
917532121798	95-027	LG 398
917532127841	595-613*	LG 463
917532127841	95-036	LG 463
917532127841	95-613*	LG 463
917532129277	595-024*	LG 465
917532129277	95-051	LG 465
917532130652	95-006	LG 397
917532130861	46-325	LG 701
917532134148	195-003	LG 400
917532134148	595-601*	LG 400
917532134148	95-601*	LG 423
917532134768	195-021	LG 468
917532134768	595-602*	LG 403
917532134768	95-602*	LG 403
917532137380	595-609*	LG 461
917532137380	95-018	LG 399
917532137380	95-609*	LG 376
917532138496	595-613*	LG 463
917532138496	95-036	LG 463
917532138496	95-613*	LG 463
917532138497	195-033	LG 400
917532138497	595-601*	LG 400
917532138497	95-601*	LG 423
917532138498	195-032	LG 425
917532138498	596-900*	LG 380
917532138498	96-900*	LG 526
917532138970	195-033	LG 400
917532138970	595-601*	LG 400
917532138970	95-601*	LG 423
917532139774	195-003	LG 400
917532139774	595-601*	LG 400
917532139774	95-601*	LG 423
917532139775	195-019	LG 466
917532141114	195-021	LG 468
917532141114	595-602*	LG 403
917532141114	95-602*	LG 403
917532144767	595-614*	LG 459
917532144767	95-052	LG 398
917532144767	95-614*	LG 375
917532145708	595-614*	LG 459
917532145708	95-045	LG 374
917532145708	95-614*	LG 375
917532152443	595-614*	LG 459
917532152443	95-045	LG 374
917532152443	95-614*	LG 375
917532157353	595-614*	LG 459
917532157353	95-052	LG 398
917532157353	95-614*	LG 375
917532159267	95-071	LG 402
917532162778	60-107	LG 703
917532165746	72-312	LG 1038
917532165833	95-057	LG 380
917532169676	60-525	LG 702
917532170698	595-614*	LG 459
917532170698	95-052	LG 398
917532170698	95-614*	LG 375
917532173920	195-062	LG 376
917532173920	596-615*	LG 529
917532173920	96-615*	LG 461

X

2019 OEM X-Reference

OEM No.	OREGON	Page
HUSQVARNA		
917532173921	95-068	LG 376
917532175064	95-057	LG 380
917532176084	595-614*	LG 459
917532176084	95-052	LG 398
917532176084	95-614*	LG 375
917532176135	95-057	LG 380
917532176556	60-107	LG 703
917532180054	195-062	LG 376
917532180054	596-615*	LG 529
917532180054	96-615*	LG 461
917532180459	595-622*	LG 468
917532180459	95-057	LG 380
917532180767	72-014	LG 1031
917532182158	60-000	LG 702
917532183281	60-110	LG 703
917532183567	60-109	LG 703
917532184588	60-103	LG 702
917532187254	195-072	LG 530
917532187254	595-605*	LG 422
917532187254	95-605*	LG 463
917532187255	595-605*	LG 422
917532187255	95-082	LG 372
917532187255	95-605*	LG 463
917532187256	195-072	LG 530
917532187256	595-605*	LG 422
917532187256	95-605*	LG 463
917532189182	60-104	LG 702
917532192682	595-602*	LG 403
917532192682	95-073	LG 533
917532192682	95-602*	LG 403
917532193144	72-003	LG 1031
917532193144	72-077	LG 1031
917532193144	72-458	LG 1031
917532193957	195-003	LG 400
917532193957	595-601*	LG 400
917532193957	95-024	LG 465
917532193957	95-601*	LG 423
917532197257	60-526	LG 702
9175322752233	95-044	LG 465
917532403107	596-370*	LG 427
917532403107	95-074	LG 533
917532403107	96-370*	LG 533
917532405380	195-070	LG 469
917532405380	596-370*	LG 427
917532405380	96-370*	LG 533
917532406707	595-602*	LG 403
917532406707	95-073	LG 533
917532406707	95-602*	LG 403
917532406713	595-602*	LG 403
917532406713	95-023	LG 380
917532406713	95-602*	LG 403
917532407816	60-102	LG 702
917532408714	60-526	LG 702
917532419273	595-807*	LG 382
917532420463	95-076	LG 404
917532420463	95-615*	LG 426
917532421825	95-076	LG 404
917532421825	95-615*	LG 426
917532422719	195-005	LG 373
917532428460	60-101	LG 702
917532435111	60-526	LG 702
917532440855	60-101	LG 702
917532700953	72-077	LG 1031
917532751646	595-024*	LG 465
917532751646	95-051	LG 465
917532752233	595-024*	LG 465
917532752233	95-044	LG 465
917532752234	195-021	LG 468
917532752234	595-602*	LG 403
917532752234	95-602*	LG 403
917532850972	595-024*	LG 465
917532850972	95-024	LG 465
917532850972MS	595-024*	LG 465
917532850972MS	95-024	LG 465
917532850973	595-602*	LG 403
917532850973	95-023	LG 380
917532850973	95-602*	LG 403
917532851462	60-000	LG 702
917539107519	195-062	LG 376
917539107519	596-615*	LG 529
917539107519	96-615*	LG 461
917539110460	195-005	LG 373
917539110832	15-473	LG 288
917539112053	195-072	LG 530
917539112053	595-605*	LG 422
917539112053	95-605*	LG 463
91756400	595-024*	LG 465
91756400	95-024	LG 465
91756401	595-602*	LG 403
91756401	95-023	LG 380
91756401	95-602*	LG 403
917577203106	195-062	LG 376
917577203106	596-615*	LG 529
917577203106	96-615*	LG 461
917700953	72-077	LG 1031
917700972	595-024*	LG 465
917700972	95-051	LG 465
917700973	195-021	LG 468
917700973	595-602*	LG 403
917700973	95-602*	LG 403
917701211MS	595-024*	LG 465
917701211MS	95-024	LG 465
917701211X417	595-024*	LG 465
917701211X417	95-024	LG 465
917701213	595-602*	LG 403
917701213	95-023	LG 380
917701213	95-602*	LG 403
917701213MS	595-602*	LG 403
917701213MS	95-023	LG 380
917701213MS	95-602*	LG 403
917733203	595-024*	LG 465
917733203	95-024	LG 465
917751646	595-024*	LG 465
917751646	95-051	LG 465
917752234	195-021	LG 468
917752234	595-602*	LG 403
917752234	595-621*	LG 467
917752234	595-621*	LG 467
917752234	95-057	LG 380
917752234	95-057	LG 380
917752234	95-602*	LG 403
917752234	95-621*	LG 402
917752234	95-621*	LG 402
91777419274	595-807*	LG 382
917777134149	195-005	LG 373
917777187256	195-072	LG 530
917777187256	595-605*	LG 422
917777187256	95-605*	LG 463
917777405380	195-070	LG 469
917777405380	596-370*	LG 427
917777405380	96-370*	LG 533
917850972	595-024*	LG 465
917850972	95-024	LG 465
917850973	595-602*	LG 403
917850973	95-023	LG 380
917850973	95-602*	LG 403
917850973MS	595-602*	LG 403
917850973MS	95-023	LG 380
917850973MS	95-602*	LG 403
917851462	60-000	LG 702
918152443	595-614*	LG 459
918152443	95-045	LG 374
918152443	95-614*	LG 375
94114601	33-254	LG 785
954633774	195-062	LG 376
954633774	596-615*	LG 529
954633774	96-615*	LG 461
954636867	195-005	LG 373
9585472	72-001	LG 1031
9585472	72-077	LG 1031
PP22055	95-024	LG 465
PP22055	95-051	LG 465
HUSTLER		
031997	72-308-1	LG 1042
26237	33-317-0	LG 729
30817	33-337	LG 730
30866	91-178	LG 471
31997	72-308-1	LG 1042
350595	82-021	LG 884
396-735	91-178	LG 471
600900	92-039	LG 470
600900X	92-039	LG 470
600900Y	92-039	LG 470
600901	396-740*	LG 415
600901	596-319*	LG 415
600901	92-038	LG 392
600901	96-319*	LG 415
600922	27-504	LG 725
601012	392-208*	LG 472
601012	596-808*	LG 472
601012	92-208	LG 472
601012X	392-208*	LG 472
601012X	596-808*	LG 472
601012X	92-208	LG 472
601013	392-208*	LG 472
601013	596-808*	LG 472
601013	92-208	LG 472
601013X	392-208*	LG 472
601013X	596-808*	LG 472
601013X	92-208	LG 472
601014	396-735*	LG 452
601014	596-308*	LG 548
601014	92-207	LG 456
601014	96-308*	LG 456
601014X	396-735*	LG 452
601014X	596-308*	LG 548
601014X	92-207	LG 456
601014X	96-308*	LG 456
601123	396-735*	LG 452
601123	596-308*	LG 548
601123	92-207	LG 456
601123	96-308*	LG 456
601123X	396-735*	LG 452
601123X	596-308*	LG 548
601123X	92-207	LG 456
601123X	96-308*	LG 456
601123Y	396-735*	LG 452
601123Y	596-308*	LG 548
601123Y	92-207	LG 456
601123Y	96-308*	LG 456
601124	392-208*	LG 472
601124	596-808*	LG 472
601124	92-208	LG 472
601124X	392-208*	LG 472
601124X	596-808*	LG 472
601124X	92-208	LG 472
601124Y	392-208*	LG 472
601124Y	596-808*	LG 472
601124Y	92-208	LG 472
601311	33-155	LG 738
601929	96-215*	LG 475
601929X	96-215*	LG 475
602284	396-739*	LG 479
602284	96-801*	LG 479
602284X	396-739*	LG 479
602284X	96-801*	LG 479
602288	396-739*	LG 479
602288	96-801*	LG 479
602414	596-601*	LG 474
602414Y	596-601*	LG 474
602415	596-601*	LG 474
602415Y	596-601*	LG 474
602416	392-208*	LG 472
602416	596-808*	LG 472
602416X	392-208*	LG 472
602416X	596-808*	LG 472
602416Y	392-208*	LG 472
602416Y	596-808*	LG 472
602439	396-727*	LG 467
602439	596-347*	LG 448
602439	91-308	LG 467
602439	96-347*	LG 387
602439X	396-727*	LG 467
602439X	596-347*	LG 448
602439X	91-308	LG 467
602439X	96-347*	LG 387
602439Y	396-727*	LG 467
602439Y	596-347*	LG 448
602439Y	91-308	LG 467
602439Y	96-347*	LG 387
602698	396-739*	LG 479
602698	91-217	LG 558
602698	96-801*	LG 479
602698X	396-739*	LG 479
602698X	91-217	LG 558
602698X	96-801*	LG 479
602771	396-740*	LG 415
602771	596-319*	LG 415
602771	96-319*	LG 415
602771X	396-740*	LG 415
602771X	596-319*	LG 415
602771X	96-319*	LG 415
602857	396-764*	LG 537
602857	596-341*	LG 482
602857	96-341*	LG 446
602857X	396-764*	LG 537
602857X	596-341*	LG 482
602857X	96-341*	LG 446
602864	596-601*	LG 474
602864X	596-601*	LG 474
603848	396-704*	LG 414
603848	596-704*	LG 471
603848	96-318*	LG 414
603848X	396-704*	LG 414
603848X	596-704*	LG 471
603848X	96-318*	LG 414
603848Y	396-704*	LG 414
603848Y	596-704*	LG 471
603848Y	96-318*	LG 414
603992	396-740*	LG 415
603992	596-319*	LG 415
603992	92-213	LG 473
603992	96-319*	LG 415
603992X	396-740*	LG 415
603992X	596-319*	LG 415
603992X	92-213	LG 473
603992X	96-319*	LG 415
603995	396-704*	LG 414
603995	596-704*	LG 471
603995	92-211	LG 471
603995	96-318*	LG 414
603995X	396-704*	LG 414
603995X	596-704*	LG 471
603995X	92-211	LG 471
603995X	96-318*	LG 414
604164	96-215*	LG 475
604164X	96-215*	LG 475
781039	33-188	LG 738
781310	75-662	LG 258
781385	78-023	LG 822
781443	75-663	LG 279
781856	78-022	LG 827
781898	90-206	LG 414
781898	90-207	LG 472
781898	92-044	LG 471
782292	75-664	LG 279
782516	396-703*	LG 502
782516	90-208	LG 502

* OREGON® Gator™ replacement blade

HUSTLER

OEM No.	OREGON	Page
782516X	396-703*	LG 502
782516X	90-208	LG 502
782532	396-704*	LG 414
782532	596-704*	LG 471
782532	90-207	LG 472
782532	96-318*	LG 414
783555	45-220	LG 232
783753	396-704*	LG 414
783753	596-704*	LG 471
783753	90-206	LG 414
783753	90-207	LG 472
783753	96-318*	LG 414
783753X	396-704*	LG 414
783753X	596-704*	LG 471
783753X	90-206	LG 414
783753X	96-318*	LG 414
783753Y	396-704*	LG 414
783753Y	596-704*	LG 471
783753Y	90-206	LG 414
783753Y	96-318*	LG 414
783936	83-011	LG 819
784207	75-665	LG 279
784223	45-225	LG 232
784249	15-017	LG 279
784256	90-205	LG 501
784256	96-302*	LG 470
784256X	90-205	LG 501
784256X	96-302*	LG 470
784322	15-018	LG 279
784504	78-026	LG 822
785030	60-053	LG 708
785436	396-704*	LG 414
785436	596-704*	LG 471
785436	90-207	LG 472
785436	96-318*	LG 414
785436X	396-704*	LG 414
785436X	596-704*	LG 471
785436X	96-318*	LG 414
785436Y	396-704*	LG 414
785436Y	596-704*	LG 471
785436Y	96-318*	LG 414
785600	30-436	LG 194
785728	96-302*	LG 470
785728X	96-302*	LG 470
786657	60-054	LG 708
787226	30-437	LG 192
787366	33-155	LG 738
787721	396-704*	LG 414
787721	596-704*	LG 471
787721	92-044	LG 471
787721	96-318*	LG 414
787721X	396-704*	LG 414
787721X	596-704*	LG 471
787721X	92-044	LG 471
787721X	96-318*	LG 414
787721Y	396-704*	LG 414
787721Y	596-704*	LG 471
787721Y	92-044	LG 471
787721Y	96-318*	LG 414
787739	96-302*	LG 470
789388	75-755	LG 258
791335	75-756	LG 279
793380	396-727*	LG 467
793380	596-347*	LG 448
793380	91-596	LG 446
793380	96-347*	LG 387
793380X	396-727*	LG 467
793380X	596-347*	LG 448
793380X	91-596	LG 446
793380X	96-347*	LG 387
793380Y	396-727*	LG 467
793380Y	596-347*	LG 448
793380Y	91-596	LG 446
793380Y	96-347*	LG 387
793398	96-216*	LG 475
793398X	96-216*	LG 475
793398Y	96-216*	LG 475
793794	396-740*	LG 415
793794	596-319*	LG 415
793794	92-038	LG 392
793794	96-319*	LG 415
793794X	396-740*	LG 415
793794X	596-319*	LG 415
793794X	92-038	LG 392
793794X	96-319*	LG 415
793794Y	396-740*	LG 415
793794Y	596-319*	LG 415
793794Y	92-038	LG 392
793794Y	96-319*	LG 415
793828	75-757	LG 256
793893	75-759	LG 279
793935	396-740*	LG 415
793935	596-319*	LG 415
793935	96-319*	LG 415
793935X	396-740*	LG 415
793935X	596-319*	LG 415
793935X	96-319*	LG 415
794198	396-704*	LG 414
794198	596-704*	LG 471
794198	92-212	LG 471
794198	96-318*	LG 414
794198X	396-704*	LG 414
794198X	596-704*	LG 471
794198X	92-212	LG 471
794198X	96-318*	LG 414
794198Y	396-704*	LG 414
794198Y	596-704*	LG 471
794198Y	92-212	LG 471
794198Y	96-318*	LG 414
794214	396-740*	LG 415
794214	596-319*	LG 415
794214	91-311	LG 439
794214	96-319*	LG 415
794214X	396-740*	LG 415
794214X	596-319*	LG 415
794214X	91-311	LG 439
794214X	96-319*	LG 415
794230	396-740*	LG 415
794230	596-319*	LG 415
794230	96-319*	LG 415
794230X	396-740*	LG 415
794230X	596-319*	LG 415
794230X	96-319*	LG 415
794230Y	396-740*	LG 415
794230Y	596-319*	LG 415
794230Y	96-319*	LG 415
794685	396-740*	LG 415
794685	596-319*	LG 415
794685	92-037	LG 423
794685	96-319*	LG 415
794685X	396-740*	LG 415
794685X	596-319*	LG 415
794685X	92-037	LG 423
794685X	96-319*	LG 415
794693	96-302*	LG 470
794693X	96-302*	LG 470
794859	396-727*	LG 467
794859	596-347*	LG 448
794859	96-347*	LG 387
794859X	396-727*	LG 467
794859X	596-347*	LG 448
794859X	96-347*	LG 387
794859Y	396-727*	LG 467
794859Y	596-347*	LG 448
794859Y	96-347*	LG 387
794867	96-216*	LG 475
794867X	96-216*	LG 475
794867Y	96-216*	LG 475
795252	396-727*	LG 467
795252	596-347*	LG 448
795252	91-308	LG 467
795252	96-347*	LG 387
795252X	396-727*	LG 467
795252X	596-347*	LG 448
795252X	91-308	LG 467
795252X	96-347*	LG 387
795252Y	396-727*	LG 467
795252Y	596-347*	LG 448
795252Y	91-308	LG 467
795252Y	96-347*	LG 387
795260	92-739	LG 474
795260	96-216*	LG 475
795260X	92-739	LG 474
795260X	96-216*	LG 475
795260Y	92-739	LG 474
795260Y	96-216*	LG 475
795526	396-704*	LG 414
795526	596-704*	LG 471
795526	90-207	LG 472
795526	92-044	LG 471
795526	96-318*	LG 414
795526X	396-704*	LG 414
795526X	596-704*	LG 471
795526X	92-044	LG 471
795526X	96-318*	LG 414
795526Y	396-704*	LG 414
795526Y	596-704*	LG 471
795526Y	92-044	LG 471
795526Y	96-318*	LG 414
795757	396-735*	LG 452
795757	596-308*	LG 548
795757	92-737	LG 418
795757	96-308*	LG 456
795757X	396-735*	LG 452
795757X	596-308*	LG 548
795757X	92-737	LG 418
795757X	96-308*	LG 456
795757Y	396-735*	LG 452
795757Y	596-308*	LG 548
795757Y	92-737	LG 418
795757Y	96-308*	LG 456
796300	96-302*	LG 470
796300X	96-302*	LG 470
796508	96-215*	LG 475
796508X	96-215*	LG 475
796623	396-735*	LG 452
796623	596-308*	LG 548
796623	92-743	LG 418
796623	96-308*	LG 456
796623X	396-735*	LG 452
796623X	596-308*	LG 548
796623X	92-743	LG 418
796623X	96-308*	LG 456
796623Y	396-735*	LG 452
796623Y	596-308*	LG 548
796623Y	92-743	LG 418
796623Y	96-308*	LG 456
796631	396-735*	LG 452
796631	596-308*	LG 548
796631	92-207	LG 456
796631	96-308*	LG 456
796631X	396-735*	LG 452
796631X	596-308*	LG 548
796631X	92-207	LG 456
796631X	96-308*	LG 456
796631Y	396-735*	LG 452
796631Y	596-308*	LG 548
796631Y	92-207	LG 456
796631Y	96-308*	LG 456
796649	396-735*	LG 452
796649	596-308*	LG 548
796649	96-308*	LG 456
796649X	396-735*	LG 452
796649X	596-308*	LG 548
796649X	96-308*	LG 456
796649Y	396-735*	LG 452
796649Y	596-308*	LG 548
796649Y	96-308*	LG 456
796839	96-216*	LG 475
796839X	96-216*	LG 475
796839Y	96-216*	LG 475
797696	392-208*	LG 472
797696	596-808*	LG 472
797696	92-042	LG 472
797696X	392-208*	LG 472
797696X	596-808*	LG 472
797696X	92-042	LG 472
797696Y	392-208*	LG 472
797696Y	596-808*	LG 472
797696Y	92-042	LG 472
797704	392-208*	LG 472
797704	596-808*	LG 472
797704	92-738	LG 472
797704X	392-208*	LG 472
797704X	596-808*	LG 472
797704X	92-738	LG 472
797704Y	392-208*	LG 472
797704Y	596-808*	LG 472
797704Y	92-738	LG 472
797712	392-208*	LG 472
797712	596-808*	LG 472
797712X	392-208*	LG 472
797712X	596-808*	LG 472
797712Y	392-208*	LG 472
797712Y	596-808*	LG 472
797720	15-019	LG 279
798496	596-601*	LG 474
798496	92-045	LG 474
798496X	596-601*	LG 474
798496X	92-045	LG 474
798504	596-601*	LG 474
798504X	596-601*	LG 474
798504Y	596-601*	LG 474
798512	596-601*	LG 474
798512X	596-601*	LG 474
798512Y	596-601*	LG 474
798702	396-764*	LG 537
798702	596-341*	LG 482
798702	96-341*	LG 446
798702X	396-764*	LG 537
798702X	596-341*	LG 482
798702X	96-341*	LG 446
798710	396-764*	LG 537
798710	596-341*	LG 482
798710	96-341*	LG 446
798710X	396-764*	LG 537
798710X	596-341*	LG 482
798710X	96-341*	LG 446
798728	396-764*	LG 537
798728	596-341*	LG 482
798728	96-341*	LG 446
798728X	396-764*	LG 537
798728X	596-341*	LG 482
798728X	96-341*	LG 446

HYDRO-GEAR

BDP-10A-201	27-001	
BDP-10A-207	27-001	
BDP-10A-208	27-001	
BDP-10A-293	27-001	
BDP-10L-112	27-001	
BDP-10L-126	27-001	
BDP-10L-131	27-001	
BDP-10L-134	27-001	
HGM-15E-3138	27-504	LG 725
PG-DACC-DY1X-XXXX		27-001

X

* OREGON® Gator™ replacement blade

2019 OEM X-Reference

OEM No.	OREGON	Page
I.D.B.A.		
754-0145	75-145	LG 300
754-0194	75-090	LG 301
754-0201	75-441	LG 334
754-0234	75-441	LG 334
754-0240	75-009	LG 301
754-0241	75-012	LG 301
754-0266	75-016	LG 301
754-0293	75-018	LG 301
954-0145	75-145	LG 300
954-0145A	75-145	LG 300
954-015A	75-145	LG 300
954-0194	75-090	LG 301
954-0201	75-441	LG 334
954-0234	75-441	LG 334
954-0240	75-009	LG 301
954-0241	75-012	LG 301
954-0241A	75-012	LG 301
954-0266	75-016	LG 301
954-0266A	75-016	LG 301
954-0293	75-018	LG 301
IDEAL MOWER SALES, IN		
754-0145	75-145	LG 300
754-0935	75-092	LG 304
954-0145	75-145	LG 300
954-0145A	75-145	LG 300
954-015A	75-145	LG 300
954-0935	75-092	LG 304
INGERSOLL		
C12102	45-114	LG 938
C29735	45-207	LG 236
C31572	91-117	LG 475
C33445	83-010	LG 819
C33445	83-400	LG 819
C37891	78-044-1	LG 834
G900-2518	78-044-1	LG 834
INTERNATIONAL HARVESTER		
491395-R1	34-025	LG 821
542520R-91	34-025	LG 821
JACOBSEN		
03239	91-180	LG 460
107927	33-320-0	LG 731
112111-01	593-600*	LG 385
112111-01	93-009	LG 476
112111-02	593-601*	LG 386
112111-02	93-010	LG 432
112111-02	93-601*	LG 432
112111-03	396-702*	LG 480
112111-03	596-702*	LG 388
112111-03	93-011	LG 557
112111-03	96-702*	LG 491
112111-04	93-025	LG 482
112243-03	396-702*	LG 480
112243-03	596-702*	LG 388
112243-03	93-013	LG 480
112243-03	96-702*	LG 491
122294	45-207	LG 236
129846	33-393	LG 943
131201	45-207	LG 236
158458	76-067-0	LG 726
16C132	80-741	LG 852
182186	78-673	LG 839
182187	48-148	LG 695
182196	78-680	LG 840
182235	80-036	LG 727
182237	78-642	LG 841
182246	82-305	LG 908
182248	04-125	LG 694
182519	78-300	LG 833
21-350759	45-207	LG 236
255 547	33-128-1	LG 741
2810030	392-013*	LG 480
3007759	392-013*	LG 480
3007759	92-013	LG 480
302009	45-205	LG 228
302010	45-205	LG 228
302227-50X	396-723*	LG 413
302227-50X	596-323*	LG 453
302227-50X	91-502	LG 477
302227-50X	96-323*	LG 477
30227-60X	396-740*	LG 415
30227-60X	596-319*	LG 415
30227-60X	90-109	LG 414
30227-60X	91-253	LG 415
30227-60X	91-264	LG 473
30227-60X	91-311	LG 439
30227-60X	91-378	LG 414
30227-60X	91-503	LG 424
30227-60X	91-506	LG 473
30227-60X	91-509	LG 424
30227-60X	91-527	LG 479
30227-60X	92-037	LG 423
30227-60X	92-038	LG 392
30227-60X	94-055	LG 480
30227-60X	96-319*	LG 415
309444	40-807	LG 585
310089	45-104	LG 939
310427	45-207	LG 236
310427	45-227	LG 234
311959	45-205	LG 228
311960	45-205	LG 228
312321	80-014	LG 727
317726	34-023	LG 822
32061	91-180	LG 460
320774	80-036	LG 727
321292	80-036	LG 727
3239	91-180	LG 460
325267	34-031	LG 821
326217	75-208	LG 277
330721	91-342	LG 447
330721CJ	91-342	LG 447
342449	80-741	LG 852
343060	42-008	LG 945
345050	45-207	LG 236
345050	45-227	LG 234
350759	45-207	LG 236
350759	45-227	LG 234
363055	396-726*	LG 391
363055	596-344*	LG 495
363055	91-181	LG 495
363055	96-344*	LG 536
363137	78-673	LG 839
363264	78-300	LG 833
375882	45-295	LG 232
388089	45-205	LG 228
390515	91-352	LG 482
390665	396-726*	LG 391
390665	596-344*	LG 495
390665	96-344*	LG 536
390666	396-716*	LG 451
390666	596-310*	LG 447
390666	91-180	LG 460
390666	96-310*	LG 444
3970261	396-764*	LG 537
3970261	596-341*	LG 482
3970261	96-341*	LG 446
400120	80-741	LG 852
4119024	392-013*	LG 480
4124087	391-591*	LG 481
4124087	92-014	LG 481
4137186	391-591*	LG 481
4137186	91-591	LG 481
4163105	391-591*	LG 481
4163106	391-591*	LG 481
4176600	394-075*	LG 571
4176600	94-076	LG 571
4186582	96-795*	LG 481
443126	04-125	LG 694
444708	80-741	LG 852
463017	02-535	
463025	80-036	LG 727
463107	02-531	
470510	02-195	LG 676
470515	02-182	LG 676
48199	78-673	LG 839
48269	78-300	LG 833
5000039	42-008	LG 945
500534	45-205	LG 228
500904	91-342	LG 447
52153	78-021	LG 832
545549	45-091	LG 249
546285	32-107	LG 676
546286	02-191	LG 676
551849	48-211	LG 233
552153	34-007	LG 826
552163	78-640	LG 835
552172	45-030	LG 245
552184	45-220	LG 232
552187	09-802	LG 233
552187	48-141	LG 249
552188	82-306	LG 874
552195	78-641	LG 835
552200	78-031	LG 826
552312	82-307-0	LG 874
553668	09-804	LG 233
553794	30-412	LG 220
554594	30-412	LG 220
593793	45-205	LG 228
64123-60	80-741	LG 852
641260	80-741	LG 852
79050	396-739*	LG 479
79050	96-801*	LG 479
990385	73-008	LG 848
99038-5	73-008	LG 848
990947	33-128-1	LG 741
991296	73-008	LG 848
A500534	45-205	LG 228
A554594	30-412	LG 220
E500534	45-205	LG 228
ISP1734306000600	42-008	LG 945
ISP3554594M1	30-412	LG 220
J182519	78-300	LG 833
J310089	45-104	LG 939
J312321	80-014	LG 727
J320774	80-036	LG 727
J321292	80-036	LG 727
J343060	42-008	LG 945
J345050	45-227	LG 234
J350759	45-207	LG 236
J443126	04-125	LG 694
J444708	80-741	LG 852
J463017	02-535	
J463107	02-531	
J470510	02-195	LG 676
J470515	02-182	LG 676
J500534	45-205	LG 228
J554594	30-412	LG 220
JA-518845	49-834	LG 611
JA-518846	49-810	LG 612
JT391039	91-363	LG 481
JT391039	96-696*	LG 481
JT391040	91-364	LG 481
JT391040	96-795*	LG 481
PK500534	45-205	LG 228
PK554594	30-412	LG 220
S212350759	45-207	LG 236
S21-2350759	45-207	LG 236
T470515	02-182	LG 676
Z14014	80-741	LG 852
JARVIS, R.E.		
754-0145	75-145	LG 300
754-0145954-0935	75-145	LG 300
754-0194	75-090	LG 301
754-0230	75-008	LG 301
754-0266	75-016	LG 301
754-0293	75-018	LG 301
754-0935	75-092	LG 304
954-0145	75-145	LG 300
954-0145A	75-145	LG 300
954-015A	75-145	LG 300
954-0194	75-090	LG 301
954-0230	75-008	LG 301
954-0266	75-016	LG 301
954-0266A	75-016	LG 301
954-0293	75-018	LG 301
JEWELCOR		
754-0145	75-145	LG 300
754-0151	75-004	LG 301
754-0201	75-441	LG 334
754-0234	75-441	LG 334
954-0145	75-145	LG 300
954-0145A	75-145	LG 300
954-0151	75-004	LG 301
954-015A	75-145	LG 300
954-0201	75-441	LG 334
954-0234	75-441	LG 334
JOHN DEERE		
24H1682	78-114	LG 829
26H10	02-401	LG 790
2922	33-386	LG 942
300295	33-386	LG 942
44745	33-386	LG 942
57M7120	33-033	LG 742
5WP1001511K2	591-585*	LG 493
5WP100511KT	591-585*	LG 493
5WP1008199K2	591-585*	LG 493
5WP1008199K2	91-585	LG 493
5WP1008199KT	591-585*	LG 493
5WP1008199KT	91-585	LG 493
8597	45-225	LG 232
9266	45-295	LG 232
941-0141	45-000	LG 237
9660	33-015	LG 948
99M7069	33-034	LG 742
AE24459	45-205	LG 228
AE48897	78-130	LG 829
AH77090	02-176	LG 676
AH77091	02-188	LG 676
AM100018	49-401	LG 605
AM100137	30-102	LG 220
AM100310	35-014	LG 806
AM100538	396-734*	LG 489
AM100538	596-734*	LG 489
AM100538	91-394	LG 489
AM100644	45-114	LG 938
AM100645	45-117	LG 938
AM100750	83-301	LG 816
AM100945	396-709*	LG 489
AM100945	596-309*	LG 489
AM100945	91-400	LG 488
AM100945	96-309*	LG 488
AM100946	191-392	LG 488
AM100946	396-709*	LG 489
AM100946	596-309*	LG 489
AM100946	92-109	LG 489
AM100946	96-309*	LG 488
AM100991	396-352*	LG 489
AM100991	91-398	LG 488
AM100991	91-400	LG 488
AM100991	92-109	LG 489
AM101054	69-282	LG 817
AM101054	83-282	LG 817

X

* OREGON® Gator™ replacement blade

JOHN DEERE

OEM No.	OREGON	Page
AM101054	83-402	LG 817
AM101191	30-303	LG 198
AM101191	30-810	LG 198
AM101191	69-032	LG 198
AM101207	83-283	LG 818
AM101207	83-403	LG 818
AM101378	83-301	LG 816
AM101406	33-248	LG 731
AM101537	91-399	LG 493
AM101538	91-399	LG 493
AM101539	91-399	LG 493
AM101561	33-377	LG 943
AM101589	72-725	LG 1044
AM101883	72-725	LG 1044
AM102190	15-511	LG 292
AM102322	34-030	LG 821
AM102323	34-009	LG 821
AM102401	396-775*	LG 493
AM102401	596-775*	LG 493
AM102401	91-395	LG 493
AM102402	91-395	LG 493
AM102423	02-193	LG 676
AM102544	33-388	LG 943
AM102544	33-393	LG 943
AM102551	33-386	LG 942
AM103018	34-015	LG 821
AM103018	78-114	LG 829
AM103019	34-033	LG 821
AM103019	34-042	LG 823
AM103019	78-114	LG 829
AM103052	45-303	LG 804
AM103286	33-393	LG 943
AM-103286	33-393	LG 943
AM103290	33-330	LG 729
AM103379	78-033	LG 834
AM103480	34-017	LG 821
AM103480	78-113	LG 829
AM103504	82-332	LG 891
AM103542	78-113	LG 829
AM104032	07-309	LG 772
AM104373	49-816	LG 612
AM104403	33-019	LG 948
AM104484	33-015	LG 948
AM104489	396-735*	LG 452
AM104489	596-308*	LG 548
AM104489	96-308*	LG 456
AM104490	396-726*	LG 391
AM104490	596-344*	LG 495
AM104490	91-256	LG 437
AM104490	96-344*	LG 536
AM104560	30-311	LG 199
AM104560	30-804	LG 199
AM104560	69-031	LG 199
AM104652	396-709*	LG 489
AM104652	596-309*	LG 489
AM104652	96-309*	LG 488
AM104806	49-300	LG 626
AM104884	33-015	LG 948
AM105564	34-024	LG 822
AM105654	78-130	LG 829
AM105998	55-122	LG 770
AM106357	33-401	LG 732
AM106542	34-007	LG 826
AM106564	34-022	LG 822
AM106627	78-025	LG 829
AM106634	396-738*	LG 485
AM106953	30-430	LG 211
AM106953	30-846	LG 211
AM107180	31-909	LG 928
AM107314	07-100	LG 774
AM107314	07-101	LG 775
AM107314	07-102	LG 774
AM107344	07-309	LG 772
AM107423	69-282	LG 817
AM107423	83-282	LG 817
AM107423	83-402	LG 817
AM107468	34-024	LG 822
AM107468	78-112	LG 829
AM107539	49-070	LG 604
AM107560	72-098	LG 1040
AM107561	72-099	LG 1040
AM107922	07-406	LG 767
AM108243	30-025	LG 208
AM108356	07-107	LG 774
AM108483	33-027	LG 947
AM-108483	33-027	LG 947
AM108653	35-032	LG 809
AM108848	33-246	LG 732
AM108923	78-113	LG 829
AM108925	82-332	LG 891
AM112300	55-245	LG 215
AM115138	72-115	LG 1033
AM115397	55-252	LG 1019
AM115442	91-381	LG 483
AM115442	91-401	LG 483
AM115442	91-447	LG 538
AM115682	34-030	LG 821
AM116236	30-710	LG 181
AM116270	43-014	LG 932
AM116299	72-094	LG 1042
AM116299	72-165	LG 1041
AM116304	07-103	LG 775
AM116304	07-160	LG 774
AM1163041	07-103	LG 775
AM118315	45-000	LG 237
AM118315	45-010	LG 238
AM118447	78-131	LG 823
AM118532	82-354	LG 892
AM118802	33-002	LG 946
AM-118802	33-002	LG 946
AM119130	33-002	LG 946
AM119139	33-002	LG 946
AM-119139	33-002	LG 946
AM119301	78-131	LG 823
AM119683	33-112	LG 735
AM119686	45-118	LG 760
AM120124	45-302	LG 804
AM120214	45-302	LG 804
AM120550	45-302	LG 804
AM121229	82-333	LG 892
AM121238	34-020	LG 821
AM121342	82-333	LG 892
AM121415	49-816	LG 612
AM121602	78-025	LG 829
AM121608	30-085	LG 203
AM121608	30-088	LG 203
AM121608	30-815	LG 203
AM121969	78-033	LG 834
AM121970	78-130	LG 829
AM122115	76-067-0	LG 726
AM122120	45-205	LG 228
AM122156	80-740	LG 852
AM122444	82-354	LG 892
AM122867	82-354	LG 892
AM123342	80-742	LG 852
AM123355	76-070-0	LG 726
AM12355	76-070-0	LG 726
AM124346	78-131	LG 823
AM124346	78-134	LG 829
AM124511	82-354	LG 892
AM125424	83-013	LG 817
AM125424	83-401	LG 817
AM126226	82-355	LG 892
AM126304	33-246	LG 732
AM126304	33-407	LG 732
AM127304	45-000	LG 237
AM127304	45-010	LG 238
AM1288925	33-028	LG 947
AM128925	33-028	LG 947
AM129824	49-008	LG 623
AM129824	49-070	LG 604
AM130365	33-334	LG 730
AM130365	33-335	LG 730
AM130365	33-336	LG 730
AM131017	45-303	LG 804
AM131966	33-002	LG 946
AM132453	33-333	LG 786
AM132764	78-128	LG 829
AM133596	33-074	LG 944
AM133602	72-165	LG 1041
AM133756	34-038	LG 821
AM134292	82-358	LG 892
AM134501	34-100	LG 830
AM134829	49-002	LG 623
AM135526	34-103	LG 830
AM135773	34-104	LG 830
AM136357	34-106	LG 830
AM136357	34-107	LG 823
AM136367	34-107	LG 823
AM136397	34-107	LG 823
AM136733	82-358	LG 892
AM136890	80-740	LG 852
AM137324	396-352*	LG 489
AM137324	91-398	LG 488
AM137324	92-109	LG 489
AM137326	396-352*	LG 489
AM137326	92-109	LG 489
AM137327	592-615*	LG 491
AM137327	91-449	LG 492
AM137327	92-110	LG 491
AM137327	92-615*	LG 491
AM137328	192-106	LG 491
AM137328	592-615*	LG 491
AM137328	92-615*	LG 491
AM137329	592-615*	LG 491
AM137329	92-110	LG 491
AM137329	92-615*	LG 491
AM137330	192-106	LG 491
AM137330	592-615*	LG 491
AM137330	92-615*	LG 491
AM137333	192-106	LG 491
AM137333	592-615*	LG 491
AM137333	92-615*	LG 491
AM137757	592-616*	LG 485
AM137757	92-616*	LG 485
AM137758	592-616*	LG 485
AM137758	92-616*	LG 485
AM138079	34-100	LG 830
AM141031	192-106	LG 491
AM141031	592-615*	LG 491
AM141031	92-615*	LG 491
AM141032	592-615*	LG 491
AM141032	92-110	LG 491
AM141032	92-615*	LG 491
AM141033	192-106	LG 491
AM141033	592-615*	LG 491
AM141033	92-615*	LG 491
AM141034	592-615*	LG 491
AM141034	92-110	LG 491
AM141034	92-615*	LG 491
AM141035	592-616*	LG 485
AM141035	92-616*	LG 485
AM141036	592-616*	LG 485
AM141036	92-616*	LG 485
AM141041	396-352*	LG 489
AM141041	91-398	LG 488
AM141041	92-109	LG 489
AM143469	82-358	LG 892
AM254424	83-284	LG 818
AM30078	33-320-0	LG 731
AM30108	72-306	LG 1038
AM30194	78-112	LG 829
AM30698	591-594*	LG 482
AM30698	91-389	LG 538
AM30698	91-395	LG 493
AM30800	30-082	LG 205
AM30844	78-113	LG 829
AM30900	30-070	LG 216
AM30900	30-822	LG 216
AM30947	33-606	LG 789
AM30949	33-008	LG 789
AM30950	33-362	LG 784
AM30958	49-009	LG 625
AM30962	49-029	LG 609
AM30965	31-904	LG 930
AM30981	72-306	LG 1038
AM31009	72-307	LG 1038
AM31029	33-016	LG 789
AM31034	30-081	LG 205
AM31034	30-093	LG 206
AM31034	30-812	LG 206
AM31100	396-725*	LG 538
AM31100	91-389	LG 538
AM31100	96-394*	LG 538
AM31126	34-001	LG 821
AM31400	30-080	LG 205
AM31400	30-819	LG 205
AM31850	07-400	LG 767
AM31995	33-388	LG 943
AM31995	33-393	LG 943
AM32196	34-017	LG 821
AM32196	78-113	LG 829
AM32318	33-393	LG 943
AM-32318	33-393	LG 943
AM32369	34-044	LG 821
AM32369	78-113	LG 829
AM32639	72-307	LG 1038
AM32672	34-030	LG 821
AM32672	78-114	LG 829
AM32705	34-009	LG 821
AM32868	45-114	LG 938
AM32869	45-117	LG 938
AM32928	49-039	LG 629
AM32930	49-002	LG 623
AM33478	35-028	LG 810
AM33574	34-038	LG 821
AM33718	72-306	LG 1038
AM33845	33-400	LG 732
AM34738	33-401	LG 732
AM34890	35-001	LG 806
AM34980	35-007	LG 806
AM35000	33-628	LG 789
AM35015	35-002	LG 806
AM35015	35-023	LG 806
AM35020	43-011	LG 935
AM35176	83-300	LG 819
AM35304	72-099	LG 1040
AM35443	45-000	LG 237
AM35557	91-391	LG 489
AM35557	91-394	LG 489
AM35585	34-018	LG 821
AM-35585	34-018	LG 821
AM35590	34-020	LG 821
AM35709	91-399	LG 493
AM35742	43-200	LG 932
AM35759	33-365	LG 784
AM35828	91-399	LG 493
AM35831	78-113	LG 829
AM35862	78-112	LG 829
AM36407	91-399	LG 493
AM36483	07-100	LG 774
AM36483	07-102	LG 774
AM36647	91-395	LG 493
AM37160	49-978	LG 609
AM37200	33-400	LG 732
AM37201	30-093	LG 206
AM37201	30-812	LG 206
AM37249	34-106	LG 830
AM37249	78-112	LG 829

X

* OREGON® Gator™ replacement blade

2019 OEM X-Reference

JOHN DEERE

OEM No.	OREGON	Page
AM37249	78-131	LG 823
AM37321	78-113	LG 829
AM37442	78-112	LG 829
AM37540	30-106	LG 179
AM37816	30-105	LG 179
AM37979	91-398	LG 488
AM38171	34-044	LG 821
AM38171	78-113	LG 829
AM38227	33-398	LG 944
AM-38227	33-398	LG 944
AM38314	396-775*	LG 493
AM38314	596-775*	LG 493
AM38314	91-395	LG 493
AM38411	33-333	LG 786
AM38708	07-100	LG 774
AM38708	07-102	LG 774
AM38782	45-103	LG 938
AM38990	30-104	LG 180
AM39001	49-008	LG 623
AM39089	35-023	LG 806
AM39489	33-384	LG 947
AM39653	83-300	LG 819
AM39682	49-102	LG 602
AM39687	83-028	LG 817
AM39849	33-384	LG 947
AM39966	396-738*	LG 485
AM39966	91-393	LG 485
AM41648	78-114	LG 829
AM54223	72-307	LG 1038
AM54243	72-307	LG 1038
AM-83541	48-320	LG 238
AN111537	45-207	LG 236
AR48236	02-700	LG 765
AT11855	33-320-0	LG 731
B5235H	02-196	LG 676
C16522	45-003	LG 244
CH12767	30-026	LG 208
CH18688	45-003	LG 244
D28041	33-019	LG 948
E16522	45-003	LG 244
E16522	45-013	LG 853
EPC201693	396-743*	LG 493
EPC201693	596-743*	LG 493
GC00032	96-811*	LG 489
GC00073	75-918	LG 293
GC00073	75-976	LG 292
GC00081	75-918	LG 293
GC00081	75-976	LG 292
GC00175	96-811*	LG 489
GC00344	96-811*	LG 489
GDU10232	396-727*	LG 467
GDU10232	596-347*	LG 448
GDU10232	91-308	LG 467
GDU10232	96-347*	LG 387
GJ66841	49-021	LG 629
GJ66844	49-816	LG 612
GJ69018	49-816	LG 612
GX00166	92-109	LG 489
GX10003	72-022	LG 1033
GX10062	15-034	LG 293
GX10065	75-298	LG 295
GX10168	72-119	LG 1040
GX10851	75-298	LG 295
GX20006	75-979	LG 255
GX20072	175-919	LG 293
GX20072	75-919	LG 293
GX20072	75-992	LG 293
GX20241	75-978	LG 293
GX20249	191-139	LG 491
GX20249	92-676*	LG 491
GX20250	191-108	LG 484
GX20250	92-675*	LG 484
GX20286	34-102	LG 830
GX20287	78-129	LG 830
GX20305	175-992	LG 293
GX20305	75-992	LG 293
GX20433	191-139	LG 491
GX20433	92-676*	LG 491
GX20434	91-496	LG 484
GX20434	92-675*	LG 484
GX20571	175-800	
GX20571	75-800	LG 257
GX20819	92-675*	LG 484
GX21380	592-617*	LG 487
GX21380	92-103	LG 487
GX21380	92-617*	LG 487
GX21395	75-799	LG 293
GX21784	592-616*	LG 485
GX21784	92-104	LG 485
GX21784	92-616*	LG 485
GX21785	592-616*	LG 485
GX21785	91-586	LG 485
GX21785	92-616*	LG 485
GX21786	592-616*	LG 485
GX21786	92-105	LG 485
GX21786	92-616*	LG 485
GX21833	175-800	
GX21833	75-800	LG 257
GX22036	75-806	LG 293
GX22036	75-978	LG 293
GX22151	192-106	LG 491
GX22151	592-615*	LG 491
GX22151	92-615*	LG 491
GX22190	96-811*	LG 489
GX22250	99-119	LG 489
GX2554H	72-119	LG 1040
GY00054	78-128	LG 829
GY00054	78-132	LG 830
GY00185	33-334	LG 730
GY00185	33-335	LG 730
GY00185	33-336	LG 730
GY2004	33-085	LG 948
GY20050	82-356	LG 893
GY20067	78-118-0	LG 830
GY20094	33-085	LG 948
GY20110	78-133	LG 831
GY20156	60-079	LG 709
GY20198	82-360	LG 893
GY20454	82-359	LG 893
GY20454	82-360	LG 893
GY20567	191-139	LG 491
GY20567	92-676*	LG 491
GY20568	191-108	LG 484
GY20568	92-675*	LG 484
GY20569	396-706*	LG 538
GY20569	596-306*	LG 487
GY20569	91-380	LG 538
GY20569	96-306*	LG 538
GY20570	175-919	LG 293
GY20570	75-919	LG 293
GY20571	75-992	LG 293
GY20572	15-483	LG 293
GY20574	30-085	LG 203
GY20574	30-942	LG 206
GY20629	34-109	LG 831
GY20629	78-133	LG 831
GY20679	592-617*	LG 487
GY20679	92-103	LG 487
GY20679	92-617*	LG 487
GY20684	592-617*	LG 487
GY20684	92-103	LG 487
GY20684	92-617*	LG 487
GY20686	592-617*	LG 487
GY20686	92-103	LG 487
GY20686	92-617*	LG 487
GY20709	07-103	LG 775
GY20785	82-356	LG 893
GY20850	192-106	LG 491
GY20850	592-615*	LG 491
GY20850	92-615*	LG 491
GY20852	592-616*	LG 485
GY20852	92-104	LG 485
GY20852	92-616*	LG 485
GY20867	82-360	LG 893
GY20962	82-359	LG 893
GY20962	82-360	LG 893
GY21098	82-359	LG 893
GY21099	82-360	LG 893
GY21106	60-079	LG 709
GY22082	34-109	LG 831
GY22082	78-133	LG 831
HE1401496	30-953	LG 211
HE140-1496	30-953	LG 211
HE140-2522	30-430	LG 211
HE1402628	30-846	LG 211
HE140-2628	30-430	LG 211
JD 8188	45-206	LG 231
JD 8226	45-205	LG 228
JD26039	45-206	LG 231
JD4467	45-220	LG 232
JD7677R	45-259	LG 224
JD8188	45-206	LG 231
JD-8188	45-206	LG 231
JD8226	45-205	LG 228
JD-8226	45-205	LG 228
JD8253	45-002	LG 237
JD8597	45-225	LG 232
JD8933	45-002	LG 237
JD9239	45-259	LG 224
JD9239	45-295	LG 232
JD9259	45-295	LG 232
JD9266	45-259	LG 224
JD9296	45-295	LG 232
JD9299	45-220	LG 232
JD9467	45-220	LG 232
KH1205008	83-284	LG 818
LG222698S	02-407	LG 790
LG231658	49-667	LG 750
LG270026	49-004	LG 622
LG280439S	43-100	LG 932
LG281658S	49-667	LG 750
LG295871	43-200	LG 932
LG298090	07-101	LG 775
LG298090S	07-101	LG 775
LG298185	33-601	LG 789
LG298968	33-365	LG 784
LG299637	49-005	LG 622
LG299948	43-011	LG 935
LG391681	49-006	LG 622
LG393010S	35-012	LG 806
LG394569S	35-023	LG 806
LG394698	49-102	LG 602
LG398188	49-036	LG 628
LG399671	43-404	LG 928
LG492932S	83-013	LG 817
LG492932S	83-401	LG 817
LG493824	43-014	LG 932
LG66768	49-667	LG 750
LG691185	33-402	LG 731
LG691764	02-861	LG 766
LG692191	80-037	LG 727
LG692304	35-014	LG 806
M110006	82-333	LG 892
M110312	75-984	LG 257
M110313	175-295	LG 295
M110313	75-295	LG 295
M110594	76-070-0	LG 726
M110978	75-246	LG 295
M111453	91-443	LG 489
M111489	72-094	LG 1042
M111489	72-165	LG 1041
M111522	396-732*	LG 484
M111522	596-332*	LG 484
M111522	91-447	LG 538
M111522	96-332*	LG 484
M111523	396-706*	LG 538
M111523	596-306*	LG 487
M111523	96-306*	LG 538
M111534	75-296	LG 295
M111564	75-296	LG 295
M112006	75-972	LG 295
M112738	91-443	LG 489
M112847	91-391	LG 489
M112847	91-394	LG 489
M112972	91-443	LG 489
M112974	396-709*	LG 489
M112974	596-309*	LG 489
M112974	96-309*	LG 488
M112991	396-709*	LG 489
M112991	596-309*	LG 489
M112991	91-403	LG 488
M112991	96-309*	LG 488
M113492	91-443	LG 489
M113517	396-732*	LG 484
M113517	596-332*	LG 484
M113517	91-383	LG 484
M113517	91-384	LG 487
M113517	96-332*	LG 484
M113518	396-706*	LG 538
M113518	596-306*	LG 487
M113518	91-384	LG 487
M113518	96-306*	LG 538
M113878	396-734*	LG 489
M113878	596-734*	LG 489
M113955	72-131	LG 1041
M114002	72-131	LG 1041
M114581	396-732*	LG 484
M114581	596-332*	LG 484
M114581	91-381	LG 483
M114581	91-447	LG 538
M114581	96-332*	LG 484
M114582	396-706*	LG 538
M114582	596-306*	LG 487
M114582	91-380	LG 538
M114582	96-306*	LG 538
M11489	72-094	LG 1042
M115245	72-129	LG 1041
M115328	396-732*	LG 484
M115328	596-332*	LG 484
M115328	91-381	LG 483
M115328	91-447	LG 538
M115328	96-332*	LG 484
M115329	396-706*	LG 538
M115329	596-306*	LG 487
M115329	91-380	LG 538
M115329	96-306*	LG 538
M115495	396-732*	LG 484
M115495	596-332*	LG 484
M115495	91-381	LG 483
M115495	91-447	LG 538
M115495	96-332*	LG 484
M115496	396-706*	LG 538
M115496	596-306*	LG 487
M115496	91-380	LG 538
M115496	91-383	LG 484
M115496	96-306*	LG 538
M115978	30-037	LG 199
M115978	30-935	LG 201
M117254	30-321	LG 199
M117608	15-485	LG 293
M118684	75-300	LG 295
M118685	75-300	LG 295
M118685	75-984	LG 257
M118958	396-709*	LG 489
M118958	596-309*	LG 489
M118958	96-309*	LG 488
M119539	75-247	LG 295
M119798	591-594*	LG 482
M119799	591-594*	LG 482

X

* OREGON® Gator™ replacement blade

JOHN DEERE

OEM No.	OREGON	Page
M119872	15-486	LG 293
M119872	75-295	LG 295
M119975	91-395	LG 493
M120381	15-037	LG 295
M121589	591-594*	LG 482
M121589	91-589	LG 482
M122106	75-703	LG 295
M122456	82-333	LG 892
M122674	15-035	LG 295
M122907	75-708	LG 295
M123281	75-297	LG 295
M124324	45-206	LG 231
M124412	73-028	LG 850
M124413	73-028	LG 850
M124413	73-100	LG 850
M124417	45-006	LG 249
M124497	07-314	LG 773
M124767	91-443	LG 489
M124896	91-496	LG 484
M124896	96-340*	LG 539
M125172	72-165	LG 1041
M125218	75-298	LG 295
M125383	15-487	LG 293
M125413	91-443	LG 489
M125808	91-443	LG 489
M126536	175-299	LG 295
M126536	75-299	LG 295
M127082	45-007	LG 853
M127129	91-449	LG 492
M127129	96-340*	LG 539
M127138	45-009	LG 853
M127164	45-008	LG 853
M127466	396-725*	LG 538
M127466	91-448	LG 482
M127466	96-394*	LG 538
M127500	396-354*	LG 484
M127500	596-354*	LG 484
M127500	90-348	LG 484
M127500	96-354*	LG 484
M127538	45-009	LG 853
M127673	396-354*	LG 484
M127673	596-354*	LG 484
M127673	96-354*	LG 484
M128485	396-730*	LG 490
M128485	596-730*	LG 490
M128485	91-078	LG 490
M128887	31-100	LG 929
M128887	31-908	LG 929
M128887	31-909	LG 928
M12907	75-708	LG 295
M131287	33-419	LG 732
M131958	396-730*	LG 490
M131958	596-730*	LG 490
M131958	91-587	LG 490
M133381	396-730*	LG 490
M133381	596-730*	LG 490
M134305	396-769*	LG 488
M134305	596-769*	LG 488
M134305	91-138	LG 488
M134305	96-364*	LG 488
M135334	396-769*	LG 488
M135334	596-769*	LG 488
M135334	96-364*	LG 488
M135589	91-381	LG 483
M135589	91-401	LG 483
M135589	91-447	LG 538
M135589	96-618*	LG 483
M135590	396-706*	LG 538
M135590	596-306*	LG 487
M135590	91-404	LG 487
M135590	96-306*	LG 538
M135782	15-036	LG 295
M135881	91-446	LG 491
M136185	396-770*	LG 485
M136194	396-770*	LG 485
M136194	91-079	LG 485
M136195	396-769*	LG 488
M136195	596-769*	LG 488
M136195	91-138	LG 488
M136195	96-364*	LG 488
M136927	15-488	LG 293
M137556	30-322	LG 200
M139802	91-449	LG 492
M139802	92-110	LG 491
M139802	96-340*	LG 539
M139803	91-496	LG 484
M139803	92-110	LG 491
M139803	96-340*	LG 539
M139975	91-604*	LG 492
M139976	91-446	LG 491
M139976	91-604*	LG 492
M139977	91-604*	LG 492
M141627	15-490	LG 294
M141669	396-743*	LG 493
M141669	596-743*	LG 493
M141785	396-734*	LG 489
M141785	596-734*	LG 489
M141785	91-394	LG 489
M141786	396-775*	LG 493
M141786	596-775*	LG 493
M141786	91-395	LG 493
M142514	396-743*	LG 493
M142514	596-743*	LG 493
M142514	91-588	LG 493
M142997	15-491	LG 294
M143019	175-300	LG 295
M143019	75-300	LG 295
M143019	75-984	LG 257
M143291	07-304	LG 770
M143504	396-771*	LG 492
M143504	596-771*	LG 492
M143504	90-309	LG 492
M143520	396-719*	LG 488
M143520	596-719*	LG 488
M143520	90-354	LG 488
M143749	92-114	LG 493
M143888	15-492	LG 294
M144012	73-028	LG 850
M144012	73-100	LG 850
M144044	75-807	LG 255
M144196	396-730*	LG 490
M144196	596-730*	LG 490
M144196	92-113	LG 490
M144297	396-710*	LG 492
M144297	596-722*	LG 492
M144652	396-769*	LG 488
M144652	596-769*	LG 488
M144652	92-118	LG 488
M144652	96-364*	LG 488
M144677	175-300	LG 295
M144677	75-300	LG 295
M144935	396-710*	LG 492
M144935	596-722*	LG 492
M145476	396-354*	LG 484
M145476	596-354*	LG 484
M145476	90-348	LG 484
M145476	96-354*	LG 484
M145516	396-719*	LG 488
M145516	596-719*	LG 488
M145969	92-110	LG 491
M145969	96-340*	LG 539
M147278	15-493	LG 294
M148556	15-494	LG 294
M148613	91-446	LG 491
M148613	91-604*	LG 492
M149422	192-106	LG 491
M149422	592-615*	LG 491
M149422	92-615*	LG 491
M150236	43-012	LG 927
M151276	15-130	LG 296
M152284	75-807	LG 255
M152702	49-411	LG 759
M152708	49-014	LG 759
M152714	49-016	LG 759
M152726	396-719*	LG 488
M152726	596-719*	LG 488
M152727	396-771*	LG 492
M152727	596-771*	LG 492
M152727	91-590	LG 492
M153118	396-352*	LG 489
M153118	92-109	LG 489
M153160	75-801	LG 296
M15406	92-110	LG 491
M154061	592-615*	LG 491
M154061	92-110	LG 491
M154061	92-615*	LG 491
M154062	592-615*	LG 491
M154062	92-110	LG 491
M154062	92-615*	LG 491
M154158	91-403	LG 488
M154159	396-352*	LG 489
M154159	92-109	LG 489
M154295	15-497	LG 294
M154601	75-802	LG 296
M154621	175-803	LG 296
M154621	75-803	LG 258
M154897	15-131	LG 296
M154958	75-295	LG 295
M154958	75-300	LG 295
M154960	15-498	LG 294
M154960	75-300	LG 295
M155343	15-499	LG 294
M155368	15-500	LG 294
M155525	75-804	LG 296
M156416	92-110	LG 491
M156416	96-340*	LG 539
M158112	396-771*	LG 492
M158112	596-771*	LG 492
M158130	75-803	LG 258
M159046	91-604*	LG 492
M159047	91-604*	LG 492
M159140	92-110	LG 491
M163620	15-037	LG 295
M163983	396-730*	LG 490
M163983	596-730*	LG 490
M164016	396-769*	LG 488
M164016	596-769*	LG 488
M164016	92-118	LG 488
M164016	96-364*	LG 488
M168223	396-730*	LG 490
M168223	596-730*	LG 490
M168223	91-587	LG 490
M172924	15-131	LG 296
M40718	42-008	LG 945
M41237	591-594*	LG 482
M41237	91-389	LG 538
M41237	91-395	LG 493
M41522	45-003	LG 244
M41522	45-013	LG 853
M41647	34-015	LG 821
M41647	78-114	LG 829
M41809	49-411	LG 759
M41960	75-975	LG 294
M41967	396-725*	LG 538
M41967	91-389	LG 538
M41967	96-394*	LG 538
M43285	02-860	LG 766
M43820	75-300	LG 295
M44121	15-501	LG 294
M44915	49-014	LG 759
M45800	30-941	LG 219
M45998	75-973	LG 294
M45998	75-975	LG 294
M47043	75-973	LG 294
M47043	75-975	LG 294
M47144	45-242	LG 243
M47147	40-502	LG 586
M47159	75-101	LG 269
M47229	78-103	LG 823
M47494	30-095	LG 206
M47494	30-818	LG 206
M47494	69-395	LG 206
M47765	75-973	LG 294
M47766	75-973	LG 294
M47797	49-667	LG 750
M47845	49-004	LG 622
M47944	49-006	LG 622
M47963	49-005	LG 622
M48452	91-391	LG 489
M48452	91-394	LG 489
M49725	49-016	LG 759
M49778	49-307	LG 625
M63810	45-227	LG 234
M70121	33-246	LG 732
M70121	33-407	LG 732
M70127	30-937	LG 202
M70128	30-304	LG 199
M70283	30-936	LG 202
M70284	30-305	LG 198
M71952	30-313	LG 201
M73509	396-735*	LG 452
M73509	596-308*	LG 548
M73509	96-308*	LG 456
M73548	55-804-1	LG 994
M73550	55-807	LG 994
M74175	91-394	LG 489
M74285	30-938	LG 202
M74449	396-709*	LG 489
M74449	596-309*	LG 489
M74449	92-109	LG 489
M74449	96-309*	LG 488
M74747	75-672	LG 294
M75026	55-243	LG 215
M75049	43-509	LG 936
M75144	30-025	LG 208
M76076	30-018	LG 198
M76077	30-018	LG 198
M76461	396-738*	LG 485
M76466	91-381	LG 483
M76466	91-401	LG 483
M76466	91-447	LG 538
M76466	96-618*	LG 483
M76467	396-706*	LG 538
M76467	596-306*	LG 487
M76467	91-404	LG 487
M76467	96-306*	LG 538
M77178	91-443	LG 489
M77534	45-220	LG 232
M77555	30-939	LG 202
M77988	115-206	LG 294
M77988	75-248	LG 294
M77988	75-295	LG 295
M77988	75-974	LG 294
M79340	07-314	LG 773
M79451	30-309	LG 199
M79451	30-814	LG 199
M79474	31-904	LG 930
M79475	31-904	LG 930
M802471	33-253	LG 731
M80373	06-004	LG 805
M806418	83-301	LG 816
M80783	396-775*	LG 493
M80783	596-775*	LG 493
M80783	91-395	LG 493
M81575	02-404	LG 790
M82263	91-395	LG 493
M82408	191-392	LG 488
M82408	396-709*	LG 489
M82408	596-309*	LG 489

X

2019 OEM X-Reference

JOHN DEERE

OEM No.	OREGON	Page
M82408	92-109	LG 489
M82408	96-309*	LG 488
M82462	115-206	LG 294
M82462	175-248	LG 294
M82462	75-248	LG 294
M82462	75-974	LG 294
M82734	115-206	LG 294
M82734	75-248	LG 294
M83184	43-012	LG 927
M83339	30-132	LG 179
M83363	91-395	LG 493
M83459	396-352*	LG 489
M83459	91-398	LG 488
M83459	91-400	LG 488
M83459	92-109	LG 489
M83541	48-320	LG 238
M83646	30-098	LG 206
M83681	30-947	LG 207
M84075	75-360	LG 294
M84472	396-709*	LG 489
M84472	596-309*	LG 489
M84472	91-400	LG 488
M84472	92-109	LG 489
M84472	96-309*	LG 488
M84690	72-094	LG 1042
M85178	09-804	LG 233
M86209	396-738*	LG 485
M86209	91-393	LG 485
M87622	396-734*	LG 489
M87622	596-734*	LG 489
M87622	91-394	LG 489
M88184	75-974	LG 294
M88251	45-227	LG 234
M88571	30-935	LG 201
M89327	75-973	LG 294
M89454	91-399	LG 493
M89455	91-399	LG 493
M89456	91-399	LG 493
M89832	75-360	LG 294
M90206	33-350	LG 949
M90989	72-725	LG 1044
M92359	30-085	LG 203
M92359	30-815	LG 203
M92360	30-942	LG 206
M92547	30-413	LG 221
M92810	91-443	LG 489
M93586	31-908	LG 929
M94511	73-022	LG 847
M96847	30-037	LG 199
M97211	30-311	LG 199
M97211	30-804	LG 199
M97211	69-031	LG 199
M97266	30-304	LG 199
M97348	33-246	LG 732
M97348	33-407	LG 732
MIA11067	33-342	LG 784
MIU10778	30-018	LG 198
MIU11286	30-139	LG 183
MIU11376	30-321	LG 199
MIU11377	30-037	LG 199
MIU11377	30-935	LG 201
MIU11747	30-157	LG 201
MIU11748	30-158	LG 201
MIU12514	33-402	LG 731
N49746	30-100	LG 217
N49746	30-841	LG 217
P20351	02-195	LG 676
P20352H	02-182	LG 676
P28535	02-191	LG 676
P28536	02-178	LG 676
P33541	02-190	LG 676
P33542	02-177	LG 676
PT10268	49-816	LG 612
PT10269	49-812	LG 612
PT10281	55-227	LG 191
PT10615	31-907	LG 929
PT10998	33-340	LG 784
PT11016	43-100	LG 932
PT11025	30-700	LG 180
PT11025	30-813	LG 180
PT11028	07-304	LG 770
PT11041	49-036	LG 628
PT11047	33-342	LG 784
PT11136	396-735*	LG 452
PT11136	596-308*	LG 548
PT11136	96-308*	LG 456
PT11558	49-832	LG 611
PT11560	49-835	LG 611
PT11561	49-835	LG 611
PT11575	49-816	LG 612
PT11576	49-816	LG 612
PT11577	49-832	LG 611
PT11578	49-816	LG 612
PT11579	49-834	LG 611
PT11580	49-816	LG 612
PT11581	49-812	LG 612
PT11583	49-810	LG 612
PT11584	49-812	LG 612
PT11584	49-816	LG 612
PT11632	75-222	LG 252
PT11632	75-223	LG 269
PT12362	07-207	LG 779
PT12668	75-222	LG 252
PT12668	75-223	LG 269
PT13193	49-816	LG 612
PT13767	43-404	LG 928
PT14764	92-011	LG 490
PT14765	92-011	LG 490
PT15339	33-344	LG 784
PT15396	49-020	LG 631
PT1581	49-812	LG 612
PT15853	30-700	LG 180
PT15853	30-710	LG 181
PT15853	30-813	LG 180
PT15867	49-067	LG 748
PT15868	07-307	LG 770
PT2254	73-008	LG 848
PT2516	49-021	LG 629
PT2637	31-100	LG 929
PT3722	49-816	LG 612
PT3723	49-832	LG 611
PT3724	49-834	LG 611
PT3725	49-812	LG 612
PT3726	49-806	LG 611
PT3727	49-810	LG 612
PT4192	80-037	LG 727
PT4228	02-861	LG 766
PT4250	30-920	LG 186
PT4265	07-101	LG 775
PT4268	33-601	LG 789
PT4336	35-012	LG 806
PT4337	07-001	LG 765
PT6511	07-206	LG 776
PT6683	56-004	LG 686
PT7102	30-950	LG 209
PT7132	92-011	LG 490
PT7184	50-502	LG 756
PT7211	02-407	LG 790
PT7245	49-033	LG 628
PT7610	07-206	LG 776
PT7946	30-923	LG 186
PT7953	30-094	LG 180
PT8376	30-931	LG 191
PT8633	82-308	LG 874
PT8649	78-031	LG 826
PT8655	07-400	LG 767
PT8663	48-200	LG 694
PT8666	75-222	LG 252
PT8666	75-223	LG 269
PT8670	48-205	LG 694
PT8675	75-221	LG 280
PT8676	75-223	LG 269
PT8698	75-223	LG 269
PT8721	396-726*	LG 391
PT8721	596-344*	LG 495
PT8721	91-335	LG 420
PT8721	96-344*	LG 536
PT8755	78-644	LG 835
PT8778	78-646	LG 841
PT8886	09-801	LG 229
PT8888	09-802	LG 233
PT8891	45-242	LG 243
PT8892	48-211	LG 233
PT8894	45-010	LG 238
PT8930	55-822	LG 1027
PT8933	82-308	LG 874
PT9334	30-044	LG 179
PT9498	55-120	LG 770
PT9567	33-346	LG 786
SS33-3777	33-377	LG 943
SW07716	15-243	LG 267
SW07717	15-244	LG 267
SW35COUS	02-188	LG 676
SW41COUS	02-191	LG 676
SW41OLUS	02-178	LG 676
SW50COUS	02-195	LG 676
SWP1001513KT	91-584	LG 578
TCA15075	33-377	LG 943
TCA22740	33-377	LG 943
TCU13195	15-009	LG 296
TCU13198	15-010	LG 296
TCU14939	396-770*	LG 485
TCU15881	396-730*	LG 490
TCU15881	596-730*	LG 490
TCU15881	92-113	LG 490
TCU15882	396-743*	LG 493
TCU15882	596-743*	LG 493
TCU15882	92-114	LG 493
TCU16036	15-038	LG 296
TCU16092	15-507	LG 296
TCU16495	15-039	LG 296
TCU16841	15-508	LG 296
TCU16907	15-009	LG 296
TCU18678	396-770*	LG 485
TCU18744	72-032	LG 1038
TCU18990	396-730*	LG 490
TCU18990	596-730*	LG 490
TCU19408	15-009	LG 296
TCU19900	15-038	LG 296
TCU20002	15-040	LG 296
TCU21475	396-770*	LG 485
TCU25673	15-041	LG 297
TCU26297	15-042	LG 297
TCU27401	391-595*	LG 493
TCU27876	391-595*	LG 493
TCU28433	15-041	LG 297
TCU29188	396-726*	LG 391
TCU29188	596-344*	LG 495
TCU29188	91-235	LG 461
TCU29188	96-344*	LG 536
TCU29254	15-042	LG 297
TCU29299	396-735*	LG 452
TCU29299	596-308*	LG 548
TCU29299	92-207	LG 456
TCU29299	96-308*	LG 456
TCU29869	396-726*	LG 391
TCU29869	596-344*	LG 495
TCU29869	96-344*	LG 536
TCU30315	396-770*	LG 485
TCU30316	396-769*	LG 488
TCU30316	596-769*	LG 488
TCU30316	91-138	LG 488
TCU30316	96-364*	LG 488
TCU30317	396-769*	LG 488
TCU30317	596-769*	LG 488
TCU30317	92-118	LG 488
TCU30317	96-364*	LG 488
TCU34166	392-165*	LG 580
TCU34166	92-165	LG 580
TCU34280	393-601*	LG 582
TCU34280	593-601*	LG 386
TCU34280	91-039	LG 487
TCU34280	93-601*	LG 432
TCU34281	396-702*	LG 480
TCU34281	596-702*	LG 388
TCU34281	91-135	LG 387
TCU34281	96-702*	LG 491
TCU35392	396-735*	LG 452
TCU35392	596-308*	LG 548
TCU35392	92-743	LG 418
TCU35392	96-308*	LG 456
TCU35393	396-726*	LG 391
TCU35393	596-344*	LG 495
TCU35393	91-335	LG 420
TCU35393	96-344*	LG 536
TCU35394	396-702*	LG 480
TCU35394	596-702*	LG 388
TCU35394	91-596	LG 446
TCU35394	96-702*	LG 491
TCU36515	396-727*	LG 467
TCU36515	596-347*	LG 448
TCU36515	96-347*	LG 387
TCU37208	396-726*	LG 391
TCU37208	596-344*	LG 495
TCU37208	91-622	LG 536
TCU37208	96-344*	LG 536
TCU37209	396-735*	LG 452
TCU37209	596-308*	LG 548
TCU37209	91-620	LG 470
TCU37209	96-308*	LG 456
TCU51118	396-710*	LG 492
TCU51118	596-722*	LG 492
TCU51118	92-120	LG 492
TY22462	02-700	LG 765
TY22465	02-701	LG 765
UP03697	07-100	LG 774
UP03697	07-102	LG 774
VG11696	73-564-0	LG 843

JONSERED

OEM No.	OREGON	Page
501520401	43-540	LG 936

K & S TRIM ALL

OEM No.	OREGON	Page
3999	45-019	LG 239
706-16274	45-620	LG 225
706-16835	55-800	LG 934
706-18796	45-019	LG 239
T16276	45-019	LG 239

KAWASAKI

OEM No.	OREGON	Page
11013-1214	30-304	LG 199
11013-2010	30-456	LG 201
11013-2020	30-935	LG 201
11013-2021	30-303	LG 198
11013-2021	30-810	LG 198
11013-2021	69-032	LG 198
11013-2092	30-936	LG 202
11013-2093	30-305	LG 198
11013-2097	30-937	LG 202
11013-2098	30-304	LG 199
11013-2109	30-938	LG 202
11013-2110	30-311	LG 199
11013-2110	30-804	LG 199
11013-2110	69-031	LG 199
11013-2114	30-018	LG 198
11013-2114	30-329	LG 202
11013-2115	30-018	LG 198
11013-2118	30-309	LG 199
11013-2119	30-939	LG 202

X

* OREGON® Gator™ replacement blade

KAWASAKI

OEM No.	OREGON	Page
11013-2120	30-309	LG 199
11013-2120	30-814	LG 199
11013-2132	30-325	LG 199
11013-2134	30-457	LG 202
11013-2135	30-037	LG 199
11013-2139	30-321	LG 199
11013-2140	30-938	LG 202
11013-2141	30-311	LG 199
11013-2141	30-804	LG 199
11013-2141	69-031	LG 199
11013-2142	30-937	LG 202
11013-2143	30-304	LG 199
11013-2146	30-037	LG 199
11013-2174	30-939	LG 202
11013-2175	30-309	LG 199
11013-2175	30-814	LG 199
11013-2186	30-327	LG 199
11013-2195	30-327	LG 199
11013-2204	30-321	LG 199
11013-2205	30-018	LG 198
11013-2206	30-037	LG 199
11013-2213	30-327	LG 199
11013-7001	30-940	LG 202
11013-7002	30-322	LG 200
11013-7002	30-835	LG 200
11013-7002	69-322	LG 200
11013-7003	30-527	LG 202
11013-7005	30-054	LG 200
11013-7005	30-163	LG 200
11013-7006	30-328	LG 200
11013-7009	30-527	LG 202
11013-7010	30-054	LG 200
11013-7010	30-163	LG 200
11013-7010	30-833	LG 200
11013-7016	30-921	LG 202
11013-7017	30-057	LG 200
11013-7018	30-441	LG 202
11013-7019	30-056	LG 208
11013-7020	30-055	LG 204
11013-7024	30-054	LG 200
11013-7024	30-163	LG 200
11013-7024	30-833	LG 200
11013-7025	30-966	LG 203
11013-7026	30-705	LG 200
11013-7027	30-163	LG 200
11013-7031	30-705	LG 200
11013-7032	30-441	LG 202
11013-7033	30-940	LG 202
11013-7034	30-921	LG 202
11013-7038	30-157	LG 201
11013-7039	30-158	LG 201
11013-7041	30-185	LG 203
11013-7044	30-157	LG 201
11013-7045	30-056	LG 208
11013-7045	30-158	LG 201
11013-7046	30-185	LG 203
11013-7049	30-164	LG 200
11013-7052	30-164	LG 200
11029-0017	30-706	LG 201
11029-2001	30-018	LG 198
11029-2002	30-309	LG 199
11029-2005	30-321	LG 199
11029-2010	30-309	LG 199
11029-2017	30-018	LG 198
11029-7001	30-054	LG 200
11029-7001	30-833	LG 200
11029-7002	30-054	LG 200
11029-7002	30-833	LG 200
11029-7010	30-706	LG 201
11029-7012	30-054	LG 200
11029-7012	30-833	LG 200
11029-7016	30-706	LG 201
11029-7021	30-706	LG 201
14043-2051	55-342	LG 627
14069-2056	55-018	LG 771
15852-11082	30-019	LG 208
16030-2022	49-021	LG 629
20010-72221	33-516	LG 866
210662056	33-246	LG 732
210662056	33-407	LG 732
21066-2056	33-246	LG 732
21066-2056	33-407	LG 732
210662070	33-246	LG 732
210662070	33-407	LG 732
21066-2070	33-246	LG 732
21066-2070	33-407	LG 732
21130-2056	33-516	LG 866
21163-0727	33-795	LG 917
21163-0749	33-795	LG 917
21163-2073	33-728	LG 917
21163-2073A	33-728	LG 917
21163-2101	33-729	LG 917
21163-2132	33-729	LG 917
21163-2138	33-728	LG 917
211632147	33-729	LG 917
21163-2147	33-729	LG 917
21163-7001	33-730	LG 917
21163-7002	33-743	LG 918
21163-7003	33-744	LG 918
21163-7007	33-793	LG 918
21163-7010	33-730	LG 917
21163-7014	33-743	LG 918
21163-7022	33-730	LG 917
21163-7023	33-794	LG 918
21163-7025	33-792	LG 918
21163-7026	33-743	LG 918
21163-7029	33-730	LG 917
21163-7029	33-793	LG 918
21163-7031	33-793	LG 918
310101-6441A	55-017	LG 772
310101-6441B	55-017	LG 772
310301-6660A	55-119	LG 764
310370-6122A	49-021	LG 629
310370-6168A	55-342	LG 627
310401-3441A	55-158	LG 934
310501-3431A	31-071	LG 923
310850-6680A	55-092	LG 768
311409-6646B	55-018	LG 771
311509-3552-00	55-092	LG 768
3119AA-8418D	33-516	LG 866
3144-AA-1312A	30-313	LG 201
49019-0014	07-063	LG 775
49019-0014	07-122	LG 775
49019-0707	07-063	LG 775
49019-0707	07-122	LG 775
49019-1055	07-062	LG 775
49019-2065	55-119	LG 764
49019-7001	07-063	LG 775
49019-7001	07-122	LG 775
49019-7005	07-063	LG 775
49019-7005	07-122	LG 775
49043-2058	55-092	LG 768
49043-2065	55-118	LG 630
49049-2057	55-092	LG 768
49049-2089	55-092	LG 768
49064-2059	30-313	LG 201
49065-2001	83-282	LG 817
49065-2001	83-402	LG 817
49065-2057	69-282	LG 817
49065-2057	83-282	LG 817
49065-2057	83-402	LG 817
49065-2061	83-282	LG 817
49065-2061	83-402	LG 817
49065-2062	83-282	LG 817
49065-2062	83-402	LG 817
49065-2070	69-282	LG 817
49065-2070	83-282	LG 817
49065-2070	83-402	LG 817
49065-2071	69-282	LG 817
49065-2071	83-282	LG 817
49065-2071	83-402	LG 817
49065-2074	83-282	LG 817
49065-2074	83-402	LG 817
49065-2074	83-502	LG 817
49065-2078	83-282	LG 817
49065-2078	83-402	LG 817
49065-7007	83-013	LG 817
49065-7007S	83-013	LG 817
49065-7010	83-282	LG 817
49065-7010	83-402	LG 817
49088-2166	31-071	LG 923
49088-2473-9H	43-417	LG 936
49088-2473-YK	43-417	LG 936
49116-2064	55-018	LG 771
51049-2057	55-017	LG 772
51049-2091	55-017	LG 772
59074-2053	40-141	LG 585
59074-2053A	40-141	LG 585
59101-2067	55-158	LG 934
59101-2103	31-014	LG 934
59101-2110	31-014	LG 934
59101-7001	31-115	LG 934
92145-2090	43-417	LG 936
92145-7008	31-114	LG 936
92-145-7008	31-114	LG 936
92145-7063	43-417	LG 936
99969-1829	21-095	LG 981
999997080	33-730	LG 917
99999-7080	33-730	LG 917
99999-7080	33-793	LG 918

KEES

OEM No.	OREGON	Page
100026	75-269	LG 252
100340	396-716*	LG 451
100340	596-310*	LG 447
100340	96-310*	LG 444
100340	99-127	LG 375
100341	396-726*	LG 391
100341	596-344*	LG 495
100341	91-256	LG 437
100341	96-344*	LG 536
101080	33-026	LG 947
101080	33-028	LG 947
101164	83-010	LG 819
101164	83-400	LG 819
101366	396-716*	LG 451
101366	596-310*	LG 447
101366	96-310*	LG 444
101366	99-127	LG 375
101485	396-726*	LG 391
101485	596-344*	LG 495
101485	91-256	LG 437
101485	96-344*	LG 536
101733	396-727*	LG 467
101733	596-347*	LG 448
101733	91-308	LG 467
101733	96-347*	LG 387
102424	33-002	LG 946
102603	33-115	LG 738
102606	83-010	LG 819
103030	60-408	LG 700
104335	75-687	LG 297
104336	75-688	LG 297
362024	82-306	LG 874
362095	78-640	LG 835
362096	78-641	LG 835
362101	48-205	LG 694
363033	09-802	LG 233
363039	43-075	
363055	396-726*	LG 391
363055	596-344*	LG 495
363055	91-181	LG 495
363055	96-344*	LG 536
363143	75-036	LG 297
363144	75-221	LG 280
363145	75-240	LG 297
363150	34-023	LG 822
363150	34-024	LG 822
363161	48-211	LG 233
363173	45-220	LG 232
363194	45-127	LG 244
363199	45-078	LG 230
363214	78-031	LG 826
363312	83-282	LG 817
363312	83-402	LG 817
363333	07-100	LG 774
393194	45-030	LG 245
430409	33-027	LG 947
482005	82-307-0	LG 874
483011	396-716*	LG 451
483011	596-310*	LG 447
483011	91-180	LG 460
483011	96-310*	LG 444
483013	75-058	LG 255
483036	34-007	LG 826
483036	34-024	LG 822
483036	78-021	LG 832
539105476	396-731*	LG 427
539112078	595-088*	LG 458
539112078	95-084	LG 494
539112078	95-088*	LG 458
539113312	596-900*	LG 380
539113312	95-086	LG 425
539113312	96-900*	LG 526
539113425	595-087*	LG 417
539113425	95-087	LG 460
72303	396-731*	LG 427
923408	33-027	LG 947

KENDA

OEM No.	OREGON	Page
18X750-8	68-214	LG 962
410/350-4	68-213	LG 962

KING KUTTER

OEM No.	OREGON	Page
167133	15-512	LG 298
167148	15-513	LG 298
167149	15-514	LG 298
167163	15-515	LG 298
168020	72-738	LG 1045
190320	91-452	LG 497
190324	91-453	LG 497
190424	91-453	LG 497
502320	91-452	LG 497
502324	91-453	LG 497

KING-O-LAWN

OEM No.	OREGON	Page
1097	40-110	LG 584
7192	45-257	LG 245

KIRBY, BLOCK DIST. CO

OEM No.	OREGON	Page
754-0145	75-145	LG 300
754-0178	75-179	LG 310
754-0935	75-092	LG 304
954-0145	75-145	LG 300
954-0145A	75-145	LG 300
954-015A	75-145	LG 300
954-0178	75-179	LG 310
954-0935	75-092	LG 304

K-MART

OEM No.	OREGON	Page
754-0240	75-009	LG 301
754-0241	75-012	LG 301
954-0240	75-009	LG 301
954-0241	75-012	LG 301
954-0241A	75-012	LG 301

* OREGON® Gator™ replacement blade

2019 OEM X-Reference

OEM No.	OREGON	Page
KOHLER		
12 050 01	83-284	LG 818
12 050 01	83-404	LG 818
12 050 01 S1	83-284	LG 818
12 050 01S	83-284	LG 818
12 050 01-S	83-284	LG 818
12 050 01-S	83-404	LG 818
12 050 08	83-284	LG 818
12 050 08-S	83-284	LG 818
12 083 01	30-942	LG 206
12 083 03	30-085	LG 203
12 083 04	30-085	LG 203
12 083 04	30-815	LG 203
12 083 05	30-085	LG 203
12 083 05	30-815	LG 203
12 083 05-S	30-085	LG 203
12 083 05-S	30-815	LG 203
12 083 05-S1	30-085	LG 203
12 083 05-S1	30-815	LG 203
12 083 08	30-942	LG 206
12 083 08-S	30-942	LG 206
12 083 08-S1	30-942	LG 206
12 083 10	30-088	LG 203
12 083 10-S	30-088	LG 203
12 083 10-S1	30-088	LG 203
12 083 10-S1	30-834	LG 203
12 083 12	30-943	LG 206
12 083 12-S	30-943	LG 206
12 083 12-S1	30-943	LG 206
12 083 14	30-085	LG 203
12 083 14	30-815	LG 203
12 083 16	30-088	LG 203
12 089 06	43-018	LG 936
12 089 06-S	43-018	LG 936
12 098 03-S	33-710	LG 918
12 098 03-S	33-714	LG 918
12 098 05	33-715	LG 919
12 098 08	33-715	LG 919
12 098 08-S	33-715	LG 919
12 098 09	33-710	LG 918
12 098 10	33-722	LG 918
12 098 12	33-710	LG 918
12 098 12S	33-710	LG 918
12 098 12-S	33-710	LG 918
12 098 12-S	33-715	LG 919
12 098 13	33-715	LG 919
12 098 13S	33-715	LG 919
12 098 13-S	33-715	LG 919
12 098 14S	33-710	LG 918
12 098 14-S	33-710	LG 918
12 098 15	33-715	LG 919
12 098 15S	33-715	LG 919
12 098 15-S	33-715	LG 919
12 098 17-S	33-722	LG 918
12 098 19	33-710	LG 918
12 098 19S	33-710	LG 918
12 098 19-S	33-710	LG 918
12 098 20	33-715	LG 919
12 098 20S	33-715	LG 919
12 098 20-S	33-715	LG 919
12 098 21S	33-710	LG 918
12 098 21-S	33-710	LG 918
12 098 22	33-715	LG 919
12 098 22S	33-715	LG 919
12 098 22-S	33-715	LG 919
12 403 01	33-419	LG 732
12 403 01 S	33-419	LG 732
12 403 01-S	33-419	LG 732
12 757 06	43-019	LG 931
12 757 06-S	43-019	LG 931
12 883 05-S1	30-085	LG 203
12 883 05-S1	30-815	LG 203
12 883 10-S1	30-834	LG 203
1205001	83-284	LG 818
12-050-01	83-284	LG 818
12-050-01	83-404	LG 818
12-050-01S	83-284	LG 818
12-050-01-S	83-284	LG 818
12-050-01-S	83-404	LG 818
12-083-01	30-942	LG 206
12-083-04	30-815	LG 203
12-083-05	30-085	LG 203
12-083-05	30-815	LG 203
1208305S	30-085	LG 203
12-083-05-S	30-815	LG 203
12-083-05-S1	30-085	LG 203
12-083-05-S1	30-815	LG 203
12-083-08	30-942	LG 206
1208308S	30-942	LG 206
12-083-08-S	30-942	LG 206
12-083-10	30-088	LG 203
12-083-10-S	30-088	LG 203
12-083-10-S1	30-088	LG 203
12-083-10-S1	30-834	LG 203
12-083-12	30-943	LG 206
12-083-12-S	30-943	LG 206
12-083-12-S1	30-943	LG 206
12-083-14	30-815	LG 203
12-083-16	30-088	LG 203
12-098-03	33-714	LG 918
12-098-03S	33-714	LG 918
12-098-03-S	33-714	LG 918
12-098-07	33-710	LG 918
12-098-08	33-715	LG 919
12-098-08-S	33-715	LG 919
12-098-09	33-710	LG 918
12-098-10	33-722	LG 918
12-098-10-S	33-722	LG 918
12-098-12	33-710	LG 918
12-098-12S	33-710	LG 918
12-098-12-S	33-710	LG 918
12-098-13	33-715	LG 919
12-098-13S	33-715	LG 919
12-098-13-S	33-715	LG 919
12-098-14S	33-710	LG 918
12-098-14-S	33-710	LG 918
12-098-15	33-715	LG 919
12-098-15S	33-715	LG 919
12-098-15-S	33-715	LG 919
12-098-19	33-710	LG 918
12-098-19S	33-710	LG 918
12-098-19-S	33-710	LG 918
1209819SSTARTER	33-710	LG 918
12-098-20	33-715	LG 919
12-098-20S	33-715	LG 919
12-098-20-S	33-715	LG 919
1209820SSTARTER	33-715	LG 919
12-098-21S	33-710	LG 918
12-098-21-S	33-710	LG 918
1209821SSTARTER	33-710	LG 918
12-098-22	33-715	LG 919
12-098-22S	33-715	LG 919
12-098-22-S	33-715	LG 919
1209822SSTARTER	33-715	LG 919
1209822SSTARTER12		33-715
LG 919		
12-0985-22S	33-715	LG 919
1240301	33-419	LG 732
12-403-01	33-419	LG 732
1240301S	33-419	LG 732
12-883-05-S1	30-085	LG 203
12-883-05-S1	30-815	LG 203
12-883-10-S1	30-834	LG 203
13 083 02	30-942	LG 206
13 083 12-S1	30-943	LG 206
14 050 04-S	07-331	LG 776
14 083 01-S	30-165	LG 204
14 083 01-S1	30-165	LG 204
14 083 02-S	30-190	LG 207
14 083 04-S	30-165	LG 204
1408301S	30-165	LG 204
1408301S1	30-165	LG 204
1408302S	30-190	LG 207
15852-11082	30-019	LG 208
17 083 04-S	30-188	
17 083 06-S	30-189	LG 207
17 083 07S	30-188	
17 083 07-S	30-188	
17 083 12S	30-189	LG 207
17 083 12-S	30-189	LG 207
1708307S	30-188	
1708312S	30-188	
20 083 04-S	30-458	LG 207
200443	49-401	LG 605
210101	07-001	LG 765
220521	35-008	LG 808
220521S	35-008	LG 808
220521-S	35-008	LG 808
220521Z	35-008	LG 808
220701	49-401	LG 605
220702	49-401	LG 605
220980	33-628	LG 789
230722	33-016	LG 789
230722-S	33-016	LG 789
230840	30-081	LG 205
230840-S	30-081	LG 205
230840-S1	30-081	LG 205
231152	49-401	LG 605
231281	33-333	LG 786
231281S	33-333	LG 786
231281-S	33-333	LG 786
231323	33-333	LG 786
231555	49-401	LG 605
231558	49-401	LG 605
231626	49-401	LG 605
231847	30-082	LG 205
231847	30-847	LG 205
231847-S	30-082	LG 205
231847-S	30-847	LG 205
231847-S1	30-082	LG 205
231847-S1	30-847	LG 205
231848	33-333	LG 786
232518	33-333	LG 786
232546	33-333	LG 786
232696	33-628	LG 789
232845	33-333	LG 786
234812	33-400	LG 732
234869	30-125	LG 206
234869-S	30-125	LG 206
234869-S1	30-125	LG 206
235024	50-041	LG 757
235116	30-080	LG 205
235116	30-819	LG 205
235116S	30-080	LG 205
235116-S	30-080	LG 205
235116-S	30-819	LG 205
235116-S1	30-080	LG 205
235116-S1	30-819	LG 205
235152	49-401	LG 605
235810	50-041	LG 757
235W6	30-080	LG 205
236649	35-006	LG 808
236705	50-041	LG 757
237083	33-016	LG 789
237131	33-704	LG 919
237256S	33-333	LG 786
237306	50-041	LG 757
237335	33-400	LG 732
237421	30-941	LG 219
237421S	30-941	LG 219
237421-S	30-941	LG 219
237421-S1	30-941	LG 219
237511	33-704	LG 919
237534	33-704	LG 919
237564	33-704	LG 919
237658	50-041	LG 757
237658S	50-041	LG 757
24 050 02	07-063	LG 775
24 050 02	07-111	LG 776
24 050 02-S	07-063	LG 775
24 050 02-S	07-111	LG 776
24 050 02-S1	07-063	LG 775
24 050 02-S1	07-111	LG 776
24 050 05-S	07-063	LG 775
24 050 05-S	07-111	LG 776
24 050 09-S	07-063	LG 775
24 050 09-S	07-111	LG 776
24 050 10	07-063	LG 775
24 050 10	07-111	LG 776
24 050 10S	07-063	LG 775
24 050 10-S	07-063	LG 775
24 050 10-S	07-111	LG 776
24 050 10-S1	07-063	LG 775
24 050 10-S1	07-111	LG 776
24 050 13	07-063	LG 775
24 050 13	07-111	LG 776
24 050 13-S	07-063	LG 775
24 050 13-S	07-111	LG 776
24 050 13-S1	07-063	LG 775
24 050 13-S1	07-111	LG 776
24 083 02	30-944	LG 207
24 083 02-S	30-944	LG 207
24 083 02-S1	30-944	LG 207
24 083 03	30-089	LG 204
24 083 03	30-844	LG 204
24 083 03-S	30-089	LG 204
24 083 03-S	30-844	LG 204
24 083 03-S1	30-089	LG 204
24 083 03-S1	30-844	LG 204
24 083 04	30-945	LG 207
24 083 05	30-945	LG 207
24 083 05-S	30-945	LG 207
24 083 05-S1	30-945	LG 207
24 083-03S1	30-089	LG 204
24 098 01	33-714	LG 918
24 098 01S	33-714	LG 918
24 098 01-S	33-714	LG 918
24 584 03	33-518	LG 785
24 584 11	33-518	LG 785
24 584 11-S	33-518	LG 785
24 584 15	33-518	LG 785
24 584 15-S	33-518	LG 785
24 584 36-S	33-518	LG 785
24 586 36	33-518	LG 785
24 757 23	33-518	LG 785
24 883 03-S1	30-089	LG 204
24 883 03-S1	30-844	LG 204
24-050-02	07-111	LG 776
24-050-02-S	07-111	LG 776
24-050-02-S1	07-111	LG 776
24-050-10	07-063	LG 775
24-050-10	07-111	LG 776
24-050-10S	07-063	LG 775
24-050-10S	07-111	LG 776
24-050-10-S	07-063	LG 775
24-050-10-S1	07-063	LG 775
24-050-13-S	07-063	LG 775
24-050-13-S1	07-063	LG 775
24-083-02	30-944	LG 207
24-083-02-S	30-944	LG 207
24-083-02-S1	30-944	LG 207
2408303	30-089	LG 204
24-083-03	30-089	LG 204
24-083-03	30-844	LG 204
2408303S	30-089	LG 204
24-083-03-S	30-089	LG 204
24-083-03-S	30-844	LG 204
24-083-03-S1	30-089	LG 204
24-083-03-S1	30-844	LG 204
24-083-05	30-945	LG 207

X

* OREGON® Gator™ replacement blade

KOHLER

OEM No.	OREGON	Page
24-083-05-S	30-945	LG 207
24-083-05-S1	30-945	LG 207
24-098-01	33-714	LG 918
24-098-01S	33-714	LG 918
24-098-01-S	33-714	LG 918
24-584-036-S	33-518	LG 785
24-584-15-S	33-518	LG 785
24-584-36-S	33-518	LG 785
24-883-03-S1	30-089	LG 204
24-883-03-S1	30-844	LG 204
25 050 01	07-331	LG 776
25 050 01	69-281	LG 814
25 050 01	83-013	LG 817
25 050 01	83-401	LG 817
25 050 02	07-331	LG 776
25 050 02	69-281	LG 814
25 050 02	83-013	LG 817
25 050 02	83-401	LG 817
25 050 02-S	07-331	LG 776
25 050 02-S1	07-331	LG 776
25 050 03	07-332	LG 776
25 050 03-S	07-332	LG 776
25 050 03-S1	07-332	LG 776
25 050 07	07-331	LG 776
25 050 07S	07-331	LG 776
25 050 07-S	07-331	LG 776
25 050 07-S1	07-331	LG 776
25 050 08-S	07-332	LG 776
25 050 08-S1	07-332	LG 776
25 050 10-S	07-332	LG 776
25 050 22S	07-332	LG 776
25 050 22-S	07-332	LG 776
25 050 22-S1	07-332	LG 776
25 083 01	30-055	LG 204
25 083 01	30-845	LG 208
25 083 01S	30-055	LG 204
25 083 01S	30-845	LG 208
25 083 01-S	30-055	LG 204
25 083 01-S	30-845	LG 208
25 083 02	30-708	LG 204
25 083 02S	30-708	LG 204
25 083 02-S	30-708	LG 204
25 083 03	30-712	LG 205
25 083 03S	30-712	LG 205
25 083 03-S	30-712	LG 205
25 083 04	30-056	LG 208
25 083 04	30-849	LG 204
25 083 04-S	30-056	LG 208
25 083 04-S	30-849	LG 204
25 098 03	33-722	LG 918
25 098 03-S	33-722	LG 918
25 098 04	33-722	LG 918
25 098 04S	33-722	LG 918
25 098 04-S	33-722	LG 918
25 098 05	33-722	LG 918
25 098 05-S	33-722	LG 918
25 098 06	33-722	LG 918
25 098 06-S	33-722	LG 918
25 098 07	33-722	LG 918
25 098 07-S	33-722	LG 918
25 098 08	33-714	LG 918
25 098 08-S	33-710	LG 918
25 098 08-S	33-714	LG 918
25 098 09	33-714	LG 918
25 098 09-S	33-714	LG 918
25 098 10-S	33-714	LG 918
25 098 11S	33-714	LG 918
25 098 11-S	33-714	LG 918
25 099 02	33-394	LG 944
25 099 04	33-394	LG 944
25 099 04S	33-394	LG 944
25 099 04-S	33-394	LG 944
25 099 32-S	33-394	LG 944
25 403 22-S	33-400	LG 732
25 755 03	33-401	LG 732
25 755 03S	33-401	LG 732
25 755 03-S	33-401	LG 732
25 755 22	07-001	LG 765
25 757 01	49-401	LG 605
25 757 01S	49-401	LG 605
25 757 01-S	49-401	LG 605
25 757 08	49-700	LG 605
25 757 11	49-700	LG 605
25 757 11-S	49-700	LG 605
25 757 13	49-700	LG 605
25 883 01	30-847	LG 205
25 883 01S1	30-082	LG 205
25 883 01S1	30-847	LG 205
25 883 01-S1	30-082	LG 205
25 883 01-S1	30-847	LG 205
25 883 03S1	30-080	LG 205
25 883 03S1	30-819	LG 205
25 883 03-S1	30-080	LG 205
25 883 03-S1	30-819	LG 205
25-050-01	69-281	LG 814
25-050-01	83-013	LG 817
25-050-01	83-401	LG 817
25-050-02	69-281	LG 814
25-050-02	83-013	LG 817
25-050-02	83-401	LG 817
25-050-02-S	07-331	LG 776
2505007S	07-331	LG 776
25-050-07S	07-331	LG 776
25-050-07-S	07-331	LG 776
2505022S	07-332	LG 776
25-050-22S	07-332	LG 776
2505022S1	07-332	LG 776
25083003S	30-712	LG 205
25-083-01	30-055	LG 204
25-083-01	30-845	LG 208
2508301S	30-055	LG 204
25-083-01S	30-055	LG 204
25-083-01S	30-845	LG 208
25-083-01-S	30-055	LG 204
25-083-01-S	30-845	LG 208
25-083-02	30-708	LG 204
2508302S	30-708	LG 204
25-083-02S	30-708	LG 204
25-083-02-S	30-708	LG 204
25-083-03	30-712	LG 205
25-083-03S	30-712	LG 205
25-083-03-S	30-712	LG 205
25-083-04	30-056	LG 208
25-083-04	30-849	LG 204
25-083-04S	30-056	LG 208
25-083-04-S	30-056	LG 208
25-083-04-S	30-849	LG 204
25-098-04	33-722	LG 918
25-098-04S	33-722	LG 918
25-098-04-S	33-722	LG 918
25-098-05-S	33-722	LG 918
25-098-07	33-722	LG 918
25-098-07-S	33-722	LG 918
2509807SSTARTER	33-722	LG 918
25-098-08	33-714	LG 918
25-098-09S	33-714	LG 918
25-098-09-S	33-714	LG 918
2509809SSTARTER	33-714	LG 918
25-098-11S	33-714	LG 918
25-098-11-S	33-714	LG 918
25-099-02	33-394	LG 944
25-099-04	33-394	LG 944
25-099-04S	33-394	LG 944
25-099-04-S	33-394	LG 944
25-403-03-S	33-401	LG 732
2540322S	33-400	LG 732
25-462-03-S	07-407	LG 767
2575503	33-401	LG 732
25-755-03	33-401	LG 732
25-755-03S	33-401	LG 732
25-755-03-S	33-401	LG 732
25-755-22	07-001	LG 765
25-757-01	49-401	LG 605
2575701S	49-401	LG 605
25-757-01S	49-401	LG 605
25-757-01-S	49-401	LG 605
25-757-08	49-700	LG 605
25-757-11	49-700	LG 605
25-757-11S	49-700	LG 605
25-757-13	49-700	LG 605
25-883-01	30-847	LG 205
25-883-01-51	30-082	LG 205
25-883-01S1	30-082	LG 205
25-883-01S1	30-847	LG 205
25-883-01-S1	30-082	LG 205
25-883-01-S1	30-847	LG 205
25-883-03S1	30-080	LG 205
25-883-03S1	30-819	LG 205
25-883-03-S1	30-080	LG 205
25-883-03-S1	30-819	LG 205
27 755 14S	45-118	LG 760
27 755 14-S	45-118	LG 760
275679	35-006	LG 808
275679S	35-006	LG 808
275679-S	35-006	LG 808
275776	49-401	LG 605
275778	49-401	LG 605
277068	83-028	LG 817
277233	83-028	LG 817
277233-S	83-028	LG 817
27-755-14S	45-118	LG 760
27-755-14-S	45-118	LG 760
28 050 01	83-013	LG 817
28 050 01	83-401	LG 817
28 050 01-S	83-013	LG 817
28 083 03	30-023	LG 205
28 083 03-S	30-023	LG 205
28-050-01	83-013	LG 817
28-050-01	83-401	LG 817
28-083-03	30-023	LG 205
28-083-03-S	30-023	LG 205
32 083 03-S	30-130	LG 205
32 083 05-S	30-459	LG 207
32 083 06-S	30-159	LG 205
32 083 08-S	30-460	LG 207
32 098 01	33-710	LG 918
32 098 01	33-742	
32 098 01-S	33-742	
32 098 03	33-742	
32 098 03-S	33-742	
32 098 04	33-742	
32 098 04-S	33-742	
32 883 03	30-130	LG 205
32 883 03-S1	30-130	LG 205
32 883 03-S1	30-159	LG 205
32 883 06-S1	30-159	LG 205
3208303S	30-159	LG 205
32-083-06-S	30-159	LG 205
3209801	33-710	LG 918
3209801	33-742	
32-098-01	33-742	
32-098-01-S	33-742	
32-098-02-S	33-742	
32-098-03S	33-742	
32-098-03-S	33-742	
32-098-04S	33-742	
3288303S1	30-130	LG 205
32-883-03-S1	30-130	LG 205
41 050 03	07-331	LG 776
41 098 03	33-702	LG 919
41 098 04	33-702	LG 919
41 098 06	33-702	LG 919
41 098 06S	33-702	LG 919
41 098 06-S	33-702	LG 919
41 403 01	33-401	LG 732
41 403 04	33-401	LG 732
41 403 05	33-401	LG 732
41 403 06	33-400	LG 732
41 403 06-S	33-400	LG 732
41 403 09-S	33-401	LG 732
41 403 10-S	33-401	LG 732
41 519 21-S	33-333	LG 786
41 755 33	33-751	LG 927
41 755 33-S	33-751	LG 927
41-098-03	33-702	LG 919
41-098-04	33-702	LG 919
41-098-06	33-702	LG 919
41-098-06S	33-702	LG 919
41-098-06-S	33-702	LG 919
41-098-08-S	33-702	LG 919
4140301	33-401	LG 732
4140303	33-401	LG 732
4140303S	33-401	LG 732
4140304	33-401	LG 732
4140305	33-401	LG 732
41-403-05	33-401	LG 732
4140306	33-400	LG 732
41-403-06	33-400	LG 732
4140306S	33-400	LG 732
41-403-06-S	33-400	LG 732
4140309	33-401	LG 732
4140309S	33-401	LG 732
4140309SREGRECT	33-401	LG 732
4140310	33-401	LG 732
4140310S	33-401	LG 732
41-519-21-S	33-333	LG 786
41-755-33	33-751	LG 927
41-755-33S	33-751	LG 927
41-755-33-S	33-751	LG 927
45 083 01	30-946	LG 207
45 083 01-S	30-946	LG 207
45 083 01-S1	30-946	LG 207
45 083 02	30-093	LG 206
45 083 02	30-812	LG 206
45 083 02	30-946	LG 207
45 083 02-S	30-093	LG 206
45 083 02-S1	30-093	LG 206
45 098 05	33-704	LG 919
45 098 07	33-704	LG 919
45 098 07	33-774	LG 919
45 098 09	33-704	LG 919
45 098 09	33-774	LG 919
45 098 09S	33-704	LG 919
45 098 09S	33-774	LG 919
45 098 09-S	33-704	LG 919
45 098 09-S	33-774	LG 919
45 170 01-S	33-704	LG 919
45 170 01-S	33-774	LG 919
45 755 03	33-704	LG 919
45 755 03	33-774	LG 919
45 883 02-S	30-812	LG 206
45 883 02-S1	30-812	LG 206
45-083-01	30-946	LG 207
45-083-01-S	30-946	LG 207
45-083-01-S1	30-946	LG 207
45-083-02	30-093	LG 206
45-083-02	30-812	LG 206
45-083-02	30-946	LG 207
4508302S	30-093	LG 206
45-083-02-S	30-093	LG 206
45-083-02-S1	30-093	LG 206
45-098-05	33-704	LG 919
45-098-07	33-704	LG 919
45-098-07	33-774	LG 919
45-098-09	33-704	LG 919
45-098-09	33-774	LG 919
45-098-09S	33-704	LG 919
45-098-09S	33-774	LG 919

* OREGON® Gator™ replacement blade

X

2019 OEM X-Reference

OEM No.	OREGON	Page
KOHLER		
45-098-09-S	33-704	LG 919
45-098-09-S	33-774	LG 919
45-170-01-S	33-774	LG 919
45-755-03	33-774	LG 919
45-883-02-51	30-093	LG 206
45-883-02-51	30-812	LG 206
45-883-02-S	30-812	LG 206
45-883-02-S1	30-812	LG 206
47 041 10	50-041	LG 757
47 041 10-S	50-041	LG 757
47 041 15	50-041	LG 757
47 041 15S	50-041	LG 757
47 041 15-S	50-041	LG 757
47 083 01	30-098	LG 206
47 083 01	30-848	LG 206
47 083 01-S	30-098	LG 206
47 083 01-S	30-848	LG 206
47 083 01-S1	30-098	LG 206
47 083 01-S1	30-848	LG 206
47 083 03	30-095	LG 206
47 083 03	30-818	LG 206
47 083 03	69-395	LG 206
47 083 03-S	30-095	LG 206
47 083 03-S	30-818	LG 206
47 083 03-S	69-395	LG 206
47 083 03-S1	30-095	LG 206
47 083 03-S1	30-818	LG 206
47 083 03-S1	69-395	LG 206
47 145 01	33-333	LG 786
47 150 01	33-628	LG 789
47 150 03	33-628	LG 789
47 150 03-S	33-628	LG 789
47 883 01-S1	30-098	LG 206
47 883 01-S1	30-848	LG 206
47 883 03-S1	30-818	LG 206
47 883 03-S1	69-395	LG 206
47-041-10	50-041	LG 757
47-041-10-S	50-041	LG 757
47-041-15	50-041	LG 757
47-041-15S	50-041	LG 757
47-041-15-S	50-041	LG 757
47-083-01	30-098	LG 206
47-083-01	30-848	LG 206
4708301S	30-098	LG 206
47-083-01-S	30-098	LG 206
47-083-01-S	30-848	LG 206
47-083-01-S1	30-098	LG 206
47-083-01-S1	30-848	LG 206
47-083-03	30-095	LG 206
47-083-03	30-818	LG 206
47-083-03	69-395	LG 206
47-083-03-S	30-095	LG 206
47-083-03-S	30-818	LG 206
47-083-03-S	69-395	LG 206
47-083-03-S1	30-095	LG 206
47-083-03-S1	30-818	LG 206
47-083-03-S1	69-395	LG 206
47-145-01	33-333	LG 786
47-150-01	33-628	LG 789
47-150-03	33-628	LG 789
47-883 03-S1	30-095	LG 206
47-883-01-S1	30-098	LG 206
47-883-01-S1	30-848	LG 206
47-883-03-S1	30-095	LG 206
47-883-03-S1	30-818	LG 206
47-883-03-S1	69-395	LG 206
48 099 01	33-389	LG 945
48 099 01-S	33-389	LG 945
48 755 02	33-754	LG 927
48 755 40	33-754	LG 927
48-099-01	33-389	LG 945
48-099-01-S	33-389	LG 945
48-755-01	33-754	LG 927
48-755-02	33-754	LG 927
48-755-40	33-754	LG 927
52 041 18	50-043	LG 757
52 041 20	50-043	LG 757
52 041 20S	50-043	LG 757
52 041 20-S	50-043	LG 757
52 041 50S	50-043	LG 757
52 041 50-S	50-043	LG 757
52 050 02	83-403	LG 818
52 050 02-S	83-283	LG 818
52 050 02-S	83-503	LG 818
52 052 01	50-043	LG 757
52 052 03	50-043	LG 757
52 052 04	50-043	LG 757
52 083 01	30-947	LG 207
52 083 01-S	30-947	LG 207
52 083 01-S1	30-947	LG 207
52 083 02	30-946	LG 207
52 098 03	33-707	LG 920
52 098 03	33-777	LG 920
52 098 06	33-718	LG 919
52 098 09	33-707	LG 920
52 098 09	33-777	LG 920
52 098 12	33-707	LG 920
52 098 12	33-777	LG 920
52 098 12-S	33-707	LG 920
52 098 12-S	33-777	LG 920
52 098 13	33-718	LG 919
52 098 13S	33-718	LG 919
52 170 03-S	33-718	LG 919
52 584 01	33-519	LG 785
52 584 02	33-519	LG 785
52 584 02-S	33-519	LG 785
52 755 05	33-754	LG 927
52 755 15	33-761	LG 926
52-041-18	50-043	LG 757
52-041-20	50-043	LG 757
52-041-20S	50-043	LG 757
52-041-20-S	50-043	LG 757
52-041-50S	50-043	LG 757
52-041-50-S	50-043	LG 757
52-050-02	83-283	LG 818
52-050-02	83-403	LG 818
52-050-02-S	83-503	LG 818
520502S	83-283	LG 818
52-050-2-S	83-283	LG 818
52-052-03	50-043	LG 757
52-052-04	50-043	LG 757
52-083-01	30-947	LG 207
52-083-01-S	30-947	LG 207
5208301S1	30-947	LG 207
52-083-01-S1	30-947	LG 207
52-098-03	33-707	LG 920
52-098-03	33-777	LG 920
52-098-06	33-718	LG 919
52-098-06-S	33-718	LG 919
52-098-09	33-707	LG 920
52-098-09	33-777	LG 920
52-098-12	33-707	LG 920
52-098-12	33-777	LG 920
52-098-12-S	33-707	LG 920
52-098-12-S	33-777	LG 920
52-098-13	33-718	LG 919
52-098-13S	33-718	LG 919
52-098-13-S	33-718	LG 919
52-170-03-S	33-718	LG 919
52-584-02	33-519	LG 785
52-584-02-S	33-519	LG 785
52-755-05	33-754	LG 927
52-755-15	33-761	LG 926
71-755-33S	33-751	LG 927
82 755 28	33-761	LG 926
82 755 28-S	33-761	LG 926
82 755 32	33-754	LG 927
82-755-28	33-761	LG 926
82-755-28-S	33-761	LG 926
82-755-32	33-754	LG 927
A-210101	07-001	LG 765
A-220474	33-628	LG 789
A220521	35-008	LG 808
A-220521	35-008	LG 808
A-220981	33-628	LG 789
A-231079	33-628	LG 789
A-234193	33-702	LG 919
A-237083	33-016	LG 789
A-237131	33-704	LG 919
A237510	33-704	LG 919
A-237510	33-704	LG 919
A-237534	33-704	LG 919
B-234193	33-702	LG 919
KU AF4502K1	30-019	LG 208
KUBOTA		
0801-06204	45-259	LG 224
08101-06205	45-018	LG 247
12581-43010	07-104	LG 776
1258143012	07-104	LG 776
12581-43012	07-104	LG 776
12624	33-002	LG 946
12681-11220	30-316	LG 208
1269143010	07-104	LG 776
12691-43010	07-104	LG 776
1335143010	07-104	LG 776
13351-43010	07-104	LG 776
13351-4301-0	07-104	LG 776
14911-97010	15-516	LG 298
15481-97010	15-517	LG 298
1553164601	33-249	LG 731
15531-64601	33-249	LG 731
1553164603	33-249	LG 731
15531-64603	33-249	LG 731
15852-11081	30-019	LG 208
15852-11082	30-019	LG 208
265924	15-011	LG 299
62421-62310	15-519	LG 298
65621-37210	91-417	LG 500
65621-37-212	91-417	LG 500
66101-25080	15-522	LG 298
70000-00602	396-787*	LG 500
70000-00602	596-787*	LG 500
70000-00602	91-438	LG 500
70000-00602	92-130	LG 499
70000-00602	96-787*	LG 500
70000-00604	91-430	LG 497
70000-00605	396-796*	LG 498
70000-00605	91-436	LG 498
70000-11081	30-026	LG 208
70000-11220	30-025	LG 208
70000-11221	30-025	LG 208
70000-15241	83-301	LG 816
70000-25001	396-787*	LG 500
70000-25001	596-787*	LG 500
70000-25001	91-438	LG 500
70000-25001	92-130	LG 499
70000-25001	96-787*	LG 500
70000-25002	396-814*	LG 501
70000-25002	596-717*	LG 501
70000-25002	91-493	LG 500
70000-25002	96-372*	LG 500
70000-25003	91-430	LG 497
70000-25004	396-796*	LG 498
70000-25004	91-436	LG 498
70000-25005	91-433	LG 498
70000-25009	91-435	LG 498
70000-25013	396-814*	LG 501
70000-25013	596-717*	LG 501
70000-25013	91-493	LG 500
70000-25013	96-372*	LG 500
70000-2503	91-430	LG 497
70000-25030	396-814*	LG 501
70000-25030	596-717*	LG 501
70000-25030	96-372*	LG 500
70000-34330	91-435	LG 498
7000-25003	91-430	LG 497
70050-94495	15-525	LG 298
70050-94497	15-526	LG 298
70090-30708	396-814*	LG 501
70090-30708	596-717*	LG 501
70090-30708	96-372*	LG 500
70712-34330	91-430	LG 497
70713-34770	15-529	LG 298
740000-0062	92-049	LG 500
76500-34330	91-433	LG 498
76505-34330	91-435	LG 498
76505-34710	15-535	LG 298
76505-46250	72-322	LG 1041
76516-61510	15-536	LG 298
76529-34330	396-796*	LG 498
76529-34330	91-436	LG 498
76529-34710	15-538	LG 298
76539-34330	396-787*	LG 500
76539-34330	596-787*	LG 500
76539-34330	91-438	LG 500
76539-34330	92-130	LG 499
76539-34330	96-787*	LG 500
76539-34710	15-539	LG 298
76543-46250	72-323	LG 1041
76553-34330	396-814*	LG 501
76553-34330	596-717*	LG 501
76553-34330	91-493	LG 500
76553-34330	96-372*	LG 500
76553-34710	15-541	LG 298
76559-46250	72-323	LG 1041
9657	33-002	LG 946
K1211-62230	33-002	LG 946
K1211-62231	33-002	LG 946
K2561-62251	33-015	LG 948
K5111-71940	92-121	LG 499
K5111-97520	92-121	LG 499
K5112-71924	92-122	LG 499
K5112-71940	92-122	LG 499
K5112-72420	72-034	LG 1041
K5181-71940	391-617*	LG 497
K5182-71840	92-047	LG 497
K5184-97532	592-124*	LG 497
K5184-97532	92-124	LG 497
K5221-71920	396-812*	LG 498
K5221-71920	596-812*	LG 498
K5231-92340	396-748*	LG 499
K5231-92340	96-748*	LG 499
K5351-34340	396-812*	LG 498
K5351-34340	596-812*	LG 498
K5351-34342	396-812*	LG 498
K5351-34342	596-812*	LG 498
K5351-34710	15-011	LG 299
K5351-34711	15-011	LG 299
K5351-3741-0	15-011	LG 299
K5351-99020	396-812*	LG 498
K5351-99020	596-812*	LG 498
K5351-99040	396-812*	LG 498
K5351-99040	596-812*	LG 498
K5371-34330	396-612*	LG 499
K5371-34330	92-115	LG 499
K5371-34330	96-612*	LG 499
K5371-34340	92-115	LG 499
K5371-34340	92-123	LG 499
K5371-42110	72-036	LG 1041
K5371-42110	72-311-1	LG 1039
K5371-95520	92-115	LG 499
K5371-97520	92-123	LG 499
K5371-99040	92-115	LG 499
K5371-99040	92-123	LG 499
K5371-9940	92-123	LG 499
K5559-34330	391-612*	LG 500
K5559-34330	92-184	LG 500
K5575-34330	392-047*	LG 497

X

* OREGON® Gator™ replacement blade

OEM No.	OREGON	Page
KUBOTA		
K5575-34330	92-047	LG 497
K5575-34330	96-047*	LG 497
K5575-97530	392-047*	LG 497
K5575-97530	92-047	LG 497
K5575-97530	96-047*	LG 497
K5576-34340	592-124*	LG 497
K5576-34350	592-124*	LG 497
K5576-34350	92-124	LG 497
K5576-97530	592-124*	LG 497
K5576-97530	92-124	LG 497
K5579-92330	392-047*	LG 497
K5579-92330	96-047*	LG 497
K5579-92332	392-047*	LG 497
K5579-92332	96-047*	LG 497
K5583-34340	391-613*	LG 498
K5583-34340	91-613	LG 498
K5583-34350	391-613*	LG 498
K5583-97530	391-613*	LG 498
K5583-97530	91-613	LG 498
K5613-34340	396-796*	LG 498
K5613-97530	396-796*	LG 498
K5615-34330	396-796*	LG 498
K5615-34330	91-436	LG 498
K5615-34340	396-796*	LG 498
K5615-34340	91-436	LG 498
K5615-34342	396-796*	LG 498
K5615-97520	396-796*	LG 498
K5615-97520	92-132	LG 498
K5617-34330	396-748*	LG 499
K5617-34330	92-048	LG 498
K5617-34330	96-748*	LG 499
K5617-97530	396-748*	LG 499
K5617-97530	92-048	LG 498
K5617-97530	96-748*	LG 499
K5617-97590	396-748*	LG 499
K5617-97590	96-748*	LG 499
K5619-34350	396-812*	LG 498
K5619-34350	596-812*	LG 498
K5619-34350	92-127	LG 498
K5619-97530	396-812*	LG 498
K5619-97530	596-812*	LG 498
K5619-97530	92-127	LG 498
K5639-92300	396-748*	LG 499
K5639-92300	96-748*	LG 499
K5639-92332	396-748*	LG 499
K5639-92332	96-748*	LG 499
K5645-34330	396-810*	LG 499
K5645-34330	596-810*	LG 499
K5645-34330	92-128	LG 499
K5645-34330	96-363*	LG 499
K5645-34340	396-810*	LG 499
K5645-34340	596-810*	LG 499
K5645-34340	92-128	LG 499
K5645-34340	96-363*	LG 499
K5645-34710	15-544	LG 298
K5645-97520	396-810*	LG 499
K5645-97520	596-810*	LG 499
K5645-97520	92-130	LG 499
K5645-97520	96-363*	LG 499
K5645-97530	396-810*	LG 499
K5645-97530	596-810*	LG 499
K5645-97530	92-128	LG 499
K5645-97530	96-363*	LG 499
K5647-3433	92-049	LG 500
K5647-34330	92-049	LG 500
K5647-34330	92-130	LG 499
K5647-34340	396-787*	LG 500
K5647-34340	596-787*	LG 500
K5647-34340	92-049	LG 500
K5647-34340	92-130	LG 499
K5647-34340	96-787*	LG 500
K5647-34710	15-012	LG 299
K5647-34711	15-012	LG 299
K5647-97530	396-787*	LG 500
K5647-97530	596-787*	LG 500
K5647-97530	92-049	LG 500
K5647-97530	96-787*	LG 500
K5649-3434	92-049	LG 500
K5651-34330	396-810*	LG 499
K5651-34330	596-810*	LG 499
K5651-34330	92-130	LG 499
K5651-34330	96-363*	LG 499
K5651-34340	396-810*	LG 499
K5651-34340	596-810*	LG 499
K5651-34340	91-438	LG 500
K5651-34340	92-130	LG 499
K5651-34340	96-363*	LG 499
K5651-34710	15-545	LG 298
K5651-34711	15-546	LG 298
K5668-34350	92-130	LG 499
K5668-42100	72-038	LG 1041
K5668-97530	396-787*	LG 500
K5668-97530	596-787*	LG 500
K5668-97530	92-049	LG 500
K5668-97530	96-787*	LG 500
K5671-34710	15-547	LG 298
K5673-46251	72-035	LG 1041
K5676-97520	396-814*	LG 501
K5676-97520	596-717*	LG 501
K5676-97520	91-493	LG 500
K5676-97520	96-372*	LG 500
K5677-34330	92-116	LG 500
K5677-34340	396-814*	LG 501
K5677-34340	596-717*	LG 501
K5677-34340	92-116	LG 500
K5677-34340	96-372*	LG 500
K5677-34710	15-548	LG 298
K5677-97530	396-814*	LG 501
K5677-97530	596-717*	LG 501
K5677-97530	92-116	LG 500
K5677-97530	96-372*	LG 500
K5698-34340	396-814*	LG 501
K5698-34340	596-717*	LG 501
K5698-34340	91-493	LG 500
K5698-34340	96-372*	LG 500
K5698-97530	396-814*	LG 501
K5698-97530	596-717*	LG 501
K5698-97530	91-493	LG 500
K5698-97530	96-372*	LG 500
K5700-34710	15-549	LG 299
K5763-34710	15-550	LG 299
K5763-46250	72-035	LG 1041
K5764-34330	396-796*	LG 498
K5764-34330	92-132	LG 498
K5764-34340	396-796*	LG 498
K5764-34340	92-132	LG 498
K5764-34342	396-796*	LG 498
K5764-34342	92-132	LG 498
K5764-34710	15-043	LG 299
K5915-34360	592-124*	LG 497
K5915-97530	592-124*	LG 497
K5935-34360	396-812*	LG 498
K5935-34360	596-812*	LG 498
K5935-97530	396-812*	LG 498
K5935-97530	596-812*	LG 498
K5945-34360	396-787*	LG 500
K5945-34360	596-787*	LG 500
K5945-34360	96-787*	LG 500
K5955-34360	396-816*	LG 500
K5955-97530	396-816*	LG 500
RP20153710	33-249	LG 731
RP201-53710	33-249	LG 731
RS5101	33-249	LG 731
RS5155	33-249	LG 731
LACLEDE		
1301	67-013	LG 965
1308	67-017	LG 965
3300	67-001	LG 965
3302	67-020	LG 965
3305	67-018	LG 965
3307	67-005	LG 965
3309	67-003	LG 965
3310	67-009	LG 965
3315	67-004	LG 965
4300	67-014	LG 965
5303	67-011	LG 965
5307	67-015	LG 965
5308	67-019	LG 965
7106	67-012	LG 965
7121	67-002	LG 965
7129	67-010	LG 965
LANDPRIDE		
839-157C	396-735*	LG 452
839-157C	596-308*	LG 548
839-157C	92-207	LG 456
839-157C	96-308*	LG 456
839-179C	396-703*	LG 502
839-179C	90-208	LG 502
839-181C	396-703*	LG 502
839-267C	90-205	LG 501
839-267C	96-302*	LG 470
839-270C	396-735*	LG 452
839-270C	596-308*	LG 548
839-270C	96-302*	LG 470
839-270C	96-308*	LG 456
890-171C	596-627*	LG 502
890-171C	91-457	LG 502
890-172C	396-728*	LG 503
890-172C	91-456	LG 502
890-200C	396-728*	LG 503
890-200C	92-171	LG 503
890-204C	596-627*	LG 502
890-204C	92-173	LG 502
890-318C	396-728*	LG 503
890-318C	92-170	LG 502
890-325C	91-087	LG 502
890-326C	92-175	LG 502
890-375C	596-627*	LG 502
890-375C	92-172	LG 502
890-377C	596-627*	LG 502
890-698C	396-728*	LG 503
890-702C	596-627*	LG 502
890-874C	92-174	LG 502
890-951C	596-627*	LG 502
890-951C	91-457	LG 502
891-428C	596-627*	LG 502
LASTEC		
027048	396-726*	LG 391
027048	596-344*	LG 495
027048	91-623	LG 485
027048	96-344*	LG 536
063265	396-727*	LG 467
063265	596-347*	LG 448
063265	96-347*	LG 387
P107	396-731*	LG 427
P128	396-727*	LG 467
P128	596-347*	LG 448
P128	91-628	LG 387
P128	96-347*	LG 387
P246	396-727*	LG 467
P246	596-347*	LG 448
P246	91-308	LG 467
P246	96-347*	LG 387
P322	396-727*	LG 467
P322	596-347*	LG 448
P322	96-347*	LG 387
P701	396-731*	LG 427
P848	396-731*	LG 427
P849	396-731*	LG 427
LAUSON		
32089	33-320-0	LG 731
LAWN & GOLF SUPPLY		
754-0935	75-092	LG 304
954-0935	75-092	LG 304
LAWN CHIEF		
015891	82-493	LG 869
094920	82-493	LG 869
15891	82-493	LG 869
21615	75-111	LG 306
94920	82-493	LG 869
LAWN-BOY		
108-0954-03	96-660*	LG 441
112-8841-03	96-809 *	LG 505
11795	34-024	LG 822
11799	96-809 *	LG 505
11964	78-034	LG 822
120395	02-401	LG 790
12388	45-257	LG 245
13438	72-306	LG 1038
153066	55-803	LG 1022
153800	72-746	LG 1032
153802	72-747	LG 1036
200555	15-561	LG 299
207086	45-257	LG 245
207924	34-001	LG 821
208808	72-307	LG 1038
208918	72-307	LG 1038
210453	72-306	LG 1038
212655	33-334	LG 730
229907	72-746	LG 1032
230018	72-747	LG 1036
23-0660	33-386	LG 942
231290	78-032	LG 822
234594	15-559	LG 299
23486	34-031	LG 821
236544	45-257	LG 245
236879	33-034	LG 742
239907	72-746	LG 1032
240247	82-013	LG 891
241013	82-013	LG 891
241070	82-013	LG 891
24445	34-038	LG 821
254-72	45-002	LG 237
254-78	45-205	LG 228
254-79	45-206	LG 231
254-94	45-002	LG 237
36374	34-020	LG 821
36714	72-307	LG 1038
37094	34-022	LG 822
37555	72-307	LG 1038
396521	49-035	LG 629
47-1910	33-334	LG 730
551041	02-401	LG 790
602052	49-411	LG 759
602850	50-502	LG 756
603145	49-035	LG 629
605546	04-722	
607199	02-401	LG 790
607580	30-949	LG 209
607978	34-002	LG 821
609493	30-950	LG 209
610582	45-257	LG 245
611240	92-011	LG 490
612543	92-011	LG 490
612543-01	92-011	LG 490
612543-03	92-011	LG 490
613361	30-758	LG 209
6588	34-009	LG 821
677052	07-400	LG 767
677271	49-301	LG 606
678278	49-035	LG 629

X

* OREGON® Gator™ replacement blade

2019 OEM X-Reference

OEM No.	OREGON	Page
LAWN-BOY		
678406	72-500	LG 1034
678406	72-508	LG 1034
678415	49-301	LG 606
678637	72-436	LG 1034
678638	72-436	LG 1034
678882	49-035	LG 629
679966	86-001	LG 781
679966	86-009	LG 781
681741	49-035	LG 629
681849	30-950	LG 209
681979	72-500	LG 1034
681980	72-508	LG 1034
682069	55-803	LG 1022
68213	75-508	LG 319
682131	72-508	LG 1034
682300	55-820	LG 935
682367	30-949	LG 209
682915	92-011	LG 490
682972	72-436	LG 1034
682974	72-436	LG 1034
683520	72-500	LG 1034
683637	33-500-0	LG 744
683682	92-011	LG 490
683778	49-300	LG 626
683856	55-800	LG 934
684249	30-758	LG 209
684333	86-037	LG 781
684380	92-011	LG 490
684708	33-500-0	LG 744
700171	33-024	LG 945
700172	33-386	LG 942
700417	45-205	LG 228
700418	45-206	LG 231
700479	45-257	LG 245
701070	34-009	LG 821
701231	34-020	LG 821
702030	33-034	LG 742
702553	15-559	LG 299
702815	34-024	LG 822
702855	96-809 *	LG 505
703210	45-002	LG 237
703275	45-257	LG 245
703380	96-809 *	LG 505
703500	78-034	LG 822
703715	34-038	LG 821
703809	45-002	LG 237
703962	34-009	LG 821
705361	15-561	LG 299
705533	72-307	LG 1038
706364	34-008	LG 821
706623	82-013	LG 891
707380	72-746	LG 1032
720249	33-386	LG 942
740015	33-024	LG 945
740207	33-334	LG 730
740207	33-335	LG 730
740207	33-336	LG 730
740280	72-306	LG 1038
740486	78-032	LG 822
740890	34-002	LG 821
741308	33-386	LG 942
741310	82-013	LG 891
741311	82-013	LG 891
741316	76-067-0	LG 726
742223	34-031	LG 821
742512	34-022	LG 822
742577	82-013	LG 891
742882	34-001	LG 821
88264	82-013	LG 891
89844	92-011	LG 490
92-6372	49-035	LG 629
92-9697	49-035	LG 629
92-9845	33-334	LG 730
955574	30-957	LG 209
98-1362	50-502	LG 756
99-8595	33-386	LG 942
LESCO		
012036	40-132	LG 586
017249	75-208	LG 277
07200504	15-566	LG 299
10710	45-205	LG 228
10710	45-206	LG 231
12036	40-132	LG 586
12120	33-386	LG 942
12596	30-098	LG 206
12649	42-008	LG 945
13418	396-716*	LG 451
13418	596-310*	LG 447
13418	93-005	LG 447
13418	96-310*	LG 444
13680	30-947	LG 207
14524	71-109	LG 956
14524	71-274	LG 956
14524	71-402	LG 956
14888	83-282	LG 817
14888	83-402	LG 817
17249	75-054	LG 312
17249	75-208	LG 277
19289	30-946	LG 207
21871	396-735*	LG 452
21871	596-308*	LG 548
21871	91-620	LG 470
21871	96-308*	LG 456
21924	09-802	LG 233
21946	75-260	LG 312
21947	75-055	LG 255
21979	78-680	LG 840
23497	30-088	LG 203
23498	30-943	LG 206
23575	30-417	LG 193
24071	30-089	LG 204
3126	71-800	LG 956
3139	71-417	LG 957
32009	83-284	LG 818
38661	31-230	LG 937
50013	72-728	LG 1044
50031	30-405	LG 193
50036	30-080	LG 205
50045	34-007	LG 826
50045	78-021	LG 832
50048	30-303	LG 198
50056	30-093	LG 206
50057	31-140	LG 937
50059	33-628	LG 789
50062	78-031	LG 826
50065	30-935	LG 201
50070	30-430	LG 211
50071	31-150	LG 937
50073	33-332	LG 730
50076	34-028	LG 821
50085	31-160	LG 937
50093	73-351	LG 843
50094	30-949	LG 209
50098	30-432	
50102	33-388	LG 943
50107	73-560	LG 844
50107	73-561	LG 843
50108	30-950	LG 209
5011	396-735*	LG 452
5011	596-308*	LG 548
5011	91-620	LG 470
5011	96-308*	LG 456
50111	396-735*	LG 452
50111	596-308*	LG 548
50111	91-621	LG 563
50111	96-308*	LG 456
50112	79-724	LG 556
50113	30-070	LG 216
50122	73-819	LG 843
50125	396-726*	LG 391
50125	596-344*	LG 495
50125	91-622	LG 536
50125	96-344*	LG 536
50127	79-728	LG 556
50128	30-301	LG 217
50135	82-306	LG 874
50140	396-726*	LG 391
50140	596-344*	LG 495
50140	91-623	LG 485
50140	96-344*	LG 536
50150	82-307-0	LG 874
50152	60-426	LG 699
50164	82-308	LG 874
50167	60-408	LG 700
50170	396-727*	LG 467
50170	596-347*	LG 448
50170	91-626	LG 552
50170	96-347*	LG 387
50173	48-205	LG 694
50182	30-091	LG 217
50186	78-640	LG 835
50190	09-802	LG 233
50192	72-500	LG 1034
50197	30-954	LG 220
50203	48-205	LG 694
50206	72-508	LG 1034
50215	78-644	LG 835
50221	72-450	LG 1037
50225	60-188	LG 718
50227	593-600*	LG 385
50227	93-009	LG 476
50233	48-200	LG 694
50236	72-450	LG 1037
50241	393-601*	LG 582
50241	593-601*	LG 386
50241	93-010	LG 432
50241	93-601*	LG 432
50245	78-641	LG 835
50247	09-801	LG 229
50273	78-643	LG 835
50295	48-320	LG 238
50307	78-640	LG 835
50310	45-078	LG 230
50312	45-058	LG 232
50313	72-306	LG 1038
50327	45-034	LG 224
50328	72-307	LG 1038
50337	45-112	LG 241
50339	45-127	LG 244
50343	72-745	LG 1033
50369	86-001	LG 781
50371	45-295	LG 232
50372	72-747	LG 1036
50382	86-010	LG 782
50384	45-259	LG 224
50389	30-400	LG 193
50393	30-105	LG 179
50395	86-008	LG 782
50397	45-220	LG 232
50413	43-075	
50431	71-400	LG 956
50432	71-500	
50433	71-600	LG 956
50439	75-221	LG 280
50440	75-240	LG 297
50442	75-072	LG 268
50443	75-058	LG 255
50445	75-221	LG 280
50448	75-222	LG 252
50450	75-223	LG 269
50454	75-221	LG 280
50457	75-031	LG 278
50461	75-101	LG 269
50463	75-010	LG 311
50464	75-353	LG 319
50465	75-354	LG 319
50466	75-068	LG 318
50467	75-073	LG 319
50468	75-075	LG 322
50469	75-205	LG 322
50477	75-043	LG 312
50480	75-154	LG 312
50486	83-300	LG 819
50502	71-402	LG 956
50553	31-240	LG 937
50554	31-250	LG 937
50555	31-260	LG 937
50560	75-047	LG 313
50575	94-022	LG 565
50575	94-618*	LG 506
50576	30-937	LG 202
50577	30-304	LG 199
50585	30-085	LG 203
50586	30-942	LG 206
50622	30-941	LG 219
50624	75-212	LG 268
50625	30-404	LG 192
50652	30-311	LG 199
5070	396-727*	LG 467
5070	596-347*	LG 448
5070	91-626	LG 552
5070	96-347*	LG 387
50805	30-938	LG 202
50806	30-125	LG 206
51510	75-130	LG 269
51511	75-180	LG 254
60116	396-727*	LG 467
60116	596-347*	LG 448
60116	91-628	LG 387
60116	96-347*	LG 387
60559	75-128	LG 253
60562	75-133	LG 269
60565	75-113	LG 281
60568	75-115	LG 260
60574	75-114	LG 281
60575	75-186	LG 281
60578	75-155	LG 312
60579	75-052	LG 313
60592	78-020	LG 825
60615	60-410	LG 703
60625	75-188	LG 256
6486	30-081	LG 205
6525	30-082	LG 205
6564	30-095	LG 206
6796	75-165	LG 322
68079	75-058	LG 255
68093	15-570	LG 299
68096	75-048	LG 313
700151	15-571	LG 299
705010	15-572	LG 299
705375	15-573	LG 299
705376	15-574	LG 299
705377	15-575	LG 299
705378	15-576	LG 299
7225500	15-567	LG 299
7243600	15-568	LG 299
73974	40-141	LG 585
ULI65158	40-845*	LG 588
LIBERTY DIST.		
754-0145	75-145	LG 300
754-0151	75-004	LG 301
754-0201	75-441	LG 334
754-0234	75-441	LG 334
754-0240	75-009	LG 301
754-0241	75-012	LG 301
754-0266	75-016	LG 301
754-0293	75-018	LG 301

X

* OREGON® Gator™ replacement blade

OEM No.	OREGON	Page
754-0935	75-092	LG 304
954-0145	75-145	LG 300
954-0145A	75-145	LG 300
954-0151	75-004	LG 301
954-015A	75-145	LG 300
954-0201	75-441	LG 334
954-0234	75-441	LG 334
954-0240	75-009	LG 301
954-0241	75-012	LG 301
954-0241A	75-012	LG 301
954-0266	75-016	LG 301
954-0266A	75-016	LG 301
954-0293	75-018	LG 301
954-0935	75-092	LG 304
LITTLE WONDER		
124	45-130	LG 232
129	40-409	LG 585
177	75-101	LG 269
LOWES CONTINENTAL		
754-0145	75-145	LG 300
754-0151	75-004	LG 301
754-0240	75-009	LG 301
754-0241	75-012	LG 301
954-0145	75-145	LG 300
954-0145A	75-145	LG 300
954-0151	75-004	LG 301
954-015A	75-145	LG 300
954-0240	75-009	LG 301
954-0241	75-012	LG 301
954-0241A	75-012	LG 301
MACY'S		
754-0935	75-092	LG 304
954-0935	75-092	LG 304
MANCO		
1492	48-043	
5959	15-577	LG 300
MAN-SPRINGFIELD		
754-0145	75-145	LG 300
754-0151	75-004	LG 301
954-0145	75-145	LG 300
954-0145A	75-145	LG 300
954-0151	75-004	LG 301
954-015A	75-145	LG 300
MARTIN WHEEL		
**	71-104	LG 956
1008-2TRS-I	70-339	LG 959
1008-4TRS-I	70-370	LG 961
1012-4TRS-I	70-373	LG 961
104-OF	72-301	LG 1037
110	72-410	LG 1030
110-OF	72-446	LG 1030
110-OF-SC-HD	72-747	LG 1036
2612-4TF-I	68-210	LG 962
3544DC-SN	72-728	LG 1044
356-2STT-I	70-356	LG 958
35A60	48-048	LG 725
35A72	48-049	LG 725
408-2STT-I	70-358	LG 958
408DC6-58BB	72-420	LG 1047
41A54	48-051	LG 725
506-2STT-I	70-376	LG 958
5305-HD	72-316	LG 1042
53-673	48-048	LG 725
615	72-406	LG 1029
615-OF	72-427	LG 1029
615-OFLBC-HD	72-500	LG 1034
615P-OF	72-106	LG 1029
615-R	72-406	LG 1029
6305-HD	72-316	LG 1042
656-2TR-A	70-316	LG 959
6564TR-C	70-317	LG 959
658-2STT-I	70-375	LG 958
715	72-407	LG 1029
7155P-916-OF	72-117	LG 1036
715-715-OF	72-510	LG 1036
715-716-OF	72-510	LG 1036
715-OF	72-430	LG 1034
715P-916-OF	72-117	LG 1036
715P-OF	72-107	LG 1029
715-R	72-407	LG 1029
758-2TR-I	70-330	LG 959
758-4TF-I	68-204	LG 962
758-4TR-I	70-367	LG 961
875	72-408	LG 1029
875-716-OF	72-450	LG 1037
875HD-OF-BC	72-746	LG 1032
875-OF	72-437	LG 1030
875-OF-LB	72-436	LG 1034
875-OFLBC-HD	72-500	LG 1034
875-OF-LB-HD	72-508	LG 1034
875-OF-SC-HD	72-746	LG 1032
875-OF-SM	72-436	LG 1034
875P-OF	72-108	LG 1031
875-R	72-408	LG 1029
9354DB-BC	72-796	LG 1043
9354DB-SCAG	72-795	LG 1044
9354-U275-SM	70-701	LG 964
95340NA	45-014	LG 225
975P-916-OF	72-109	LG 1037
995-DD-OF	72-442	LG 1037
BK-34-CC	45-205	LG 228
BK-I-CC	45-002	LG 237
FB10131	48-007	LG 1039
FF9354	70-701	LG 964
IBB-12	45-012	LG 224
IBB-34	45-034	LG 224
IBB-58	45-058	LG 232
IC35-100F	32-103	LG 676
IC35-10F	32-101	LG 676
IC-35CL	02-188	LG 676
IC-35OL	02-176	LG 676
IC40-100F	32-106	LG 676
IC40-10F	32-105	LG 676
IC-40CL	02-190	LG 676
IC-40OL	02-177	LG 676
IC-410L	02-178	LG 676
IC41-100F	32-108	LG 676
IC41-10F	32-107	LG 676
IC-41CL	02-191	LG 676
IC-420L	02-179	LG 676
IC42-10F	32-111	LG 676
IC-42CL	02-192	LG 676
IC-430L	02-180	LG 676
IC43-10F	32-112	LG 676
IC-43CL	02-194	LG 676
LM11910	45-206	LG 231
LM11949	45-205	LG 228
MT10-11RC35	84-002	LG 675
MT10-325	84-009	LG 675
MT12-10RC41	84-001	LG 675
MT12-12RC35	84-004	LG 675
MT12-325	84-006	LG 675
PL530-JD	72-094	LG 1042
PL538-JD	72-306	LG 1038
PL538-OF	72-318	LG 1042
PL638-JD	72-307	LG 1038
PL-8W	78-680	LG 840
RH-64DM-4-LB	72-804	LG 1047
RT-3414	45-014	LG 225
SMBB-12	45-038	LG 224
SMBB-34	45-010	LG 238
SMBB-34	45-234	LG 224
SMBB-58	45-047	LG 241
SMBB-58	45-258	LG 224
SSBB-34	45-000	LG 237
T1008	71-407	LG 956
T1009	71-410	LG 956
T1012	71-408	LG 957
T1110	71-412	LG 956
T1208	71-098	LG 956
T1209	71-097	LG 956
T254	71-109	LG 956
T254	71-274	LG 956
T254P	71-109	LG 956
T254-P	71-274	LG 956
T2612	71-283	LG 957
T305	71-277	LG 956
T308	71-110	LG 956
T354	71-400	LG 956
T354-13	71-276	LG 956
T354P	71-275	LG 956
T355	71-500	
T355-13	71-278	
T356	71-600	LG 956
T356-13	71-610	LG 956
T405	71-403	LG 956
T405	71-511	LG 956
T405-87	71-511	LG 956
T408	71-800	LG 956
T408-87	71-801	LG 956
T412	71-417	LG 957
T452	71-273	LG 957
T452	71-418	LG 957
T456	71-404	
T4808-87	71-103	LG 956
T506	71-096	LG 956
T506-87	71-101	LG 956
T606-13	71-102	LG 956
T656	71-250	LG 956
T656-87	71-280	LG 956
T658	71-816	LG 956
T708	71-409	LG 956
T8010	71-411	LG 956
T810	71-100	LG 956
T8512	71-105	LG 957
T858	71-104	LG 956
T8658	71-406	LG 956
TC-1010	67-002	LG 965
TC-1012-2	67-015	LG 965
TC-1012-4	67-011	LG 965
TC-1212	67-019	LG 965
TC-354	67-012	LG 965
TC-356	67-020	LG 965
TC-356-SH	67-009	LG 965
TC-408	67-013	LG 965
TC-408-SH	67-008	LG 965
TC-456	67-003	LG 965
TC-506	67-010	LG 965
TC-506-SH	67-007	LG 965
TC-658	67-001	LG 965
TC-658-SH	67-004	LG 965
TC-810	67-017	LG 965
TC820	67-017	LG 965
TC8512-2	67-013	LG 965
TC-8512-2	67-014	LG 965
TC-858	67-005	LG 965
TC958	67-018	LG 965
TR-412	71-001	LG 957
TR-413	71-002	LG 957
TU16HD	71-107	LG 957
TU20	71-106	LG 957
TU20HD	71-108	LG 957
ZP1102G-202	72-449	LG 1030
ZP61-HD-BC	72-745	LG 1033
MARUYAMA		
216062	40-141	LG 585
261598	55-206	LG 209
261628	31-913	LG 930
261696	07-162	LG 763
261874	07-084	LG 768
263800	55-127	LG 772
265752	07-097	LG 764
267328	07-094	LG 778
268062	07-098	LG 765
597949	07-099	LG 764
69601552631	40-141	LG 585
840084	40-141	LG 585
MASSEY FERGUSON		
1023-556-M91	34-031	LG 821
1024-515-MI	34-023	LG 822
1030-049-MI	34-008	LG 821
1035-991-M1	30-081	LG 205
1040-013-MI	34-030	LG 821
1040-014-MI	34-024	LG 822
1044-627M	30-093	LG 206
11913	599-133*	LG 422
11913	96-133*	LG 422
11914	599-133*	LG 422
11914	96-133*	LG 422
11949	599-133*	LG 422
11949	96-133*	LG 422
1704100	590-685*	LG 540
1704100	90-685*	LG 540
1704100	91-705	LG 540
1704101	91-701	LG 545
1704101	96-654*	LG 511
1704101A	91-701	LG 545
1704101A	96-654*	LG 511
1704101ASM	91-701	LG 545
1704101ASM	96-654*	LG 511
1704856ASM	590-685*	LG 540
1704856ASM	90-685*	LG 540
1704856ASM	91-723	LG 508
1716695ASM	91-701	LG 545
1716695ASM	96-654*	LG 511
1716697ASM	390-698*	LG 542
1716697ASM	590-698*	LG 510
1716697ASM	90-698*	LG 510
1726453ASM	390-698*	LG 542
1726453ASM	590-698*	LG 510
1726453ASM	90-698*	LG 510
1726453ASM	91-706	LG 550
1737228AYP	599-132*	LG 522
1737228AYP	99-132	LG 539
1737228BZYP	599-132*	LG 522
1737228BZYP	99-132	LG 539
1737252	599-133*	LG 422
1737252	96-133*	LG 422
1737252	99-133	LG 542
1737252BZYP	599-133*	LG 422
1737252BZYP	96-133*	LG 422
1737252BZYP	99-133	LG 542
1737816BM	391-605*	LG 544
1737816BM	91-605	LG 544
1737816BMYP	391-605*	LG 544
1737816BMYP	91-605	LG 544
1757303YP	391-606*	LG 547
1757303YP	91-606	LG 509
1758878BMYP	391-607*	LG 511
1758878BMYP	91-607	LG 544
3020-047-MI	34-042	LG 823
350-396X1	45-259	LG 224
5101755S	396-727*	LG 467
5101755S	596-347*	LG 448
5101755S	91-209	LG 552
5101755S	96-347*	LG 387
5101755SYP	396-727*	LG 467
5101755SYP	596-347*	LG 448
5101755SYP	91-209	LG 552
5101755SYP	96-347*	LG 387
5101986SYP	396-716*	LG 451
5101986SYP	596-310*	LG 447

X

* OREGON® Gator™ replacement blade

2019 OEM X-Reference

OEM No.	OREGON	Page
MASSEY FERGUSON		
5101986SYP	91-313	LG 494
5101986SYP	96-310*	LG 444
5102227S	396-731*	LG 427
5102227S	91-609	LG 469
5104045SYP	396-727*	LG 467
5104045SYP	596-347*	LG 448
5104045SYP	91-308	LG 467
5104045SYP	96-347*	LG 387
511450-MI	34-019	LG 821
515382M1	15-578	LG 300
515383M1	15-579	LG 300
519000-MI	34-029	LG 821
527739-MI	34-017	LG 821
539118672	599-133*	LG 422
539118672	96-133*	LG 422
539118673	599-133*	LG 422
539118673	96-133*	LG 422
754-0935	75-092	LG 304
831-054M1	45-206	LG 231
831-055M1	45-205	LG 228
833411M-1	45-295	LG 232
834336-MI	34-034	LG 821
954-0935	75-092	LG 304
N1568	45-259	LG 224
MAX TORQUE		
TCBLT	84-028	LG 675
TCBLTL	84-029	LG 675
TCDNS34	84-030	LG 675
TCDRS34	84-031	LG 675
MAY COMPANY		
754-0935	75-092	LG 304
954-0935	75-092	LG 304
MCCULLOCH		
102115	56-003	LG 687
105603	56-003	LG 687
110590	56-003	LG 687
110676	04-007	LG 686
110907	56-002	LG 687
110950	56-003	LG 687
120029	04-006-0	LG 686
213883	55-227	LG 191
214224	55-218	LG 209
214226	55-214	LG 209
215708	07-009	LG 762
215803	55-227	LG 191
216685	55-212	LG 209
216736	49-810	LG 612
216905	55-218	LG 209
216985	07-200	LG 778
217075	49-832	LG 611
217076	49-806	LG 611
217077	49-832	LG 611
217078	49-834	LG 611
217080	49-834	LG 611
217085	49-834	LG 611
217087	49-812	LG 612
217087	49-834	LG 611
217090	49-832	LG 611
217091	49-832	LG 611
217109	49-816	LG 612
217111	49-816	LG 612
217387	07-010	LG 764
219764	55-807	LG 994
223077	49-020	LG 631
223740	55-804-1	LG 994
224460-00	49-812	LG 612
300149	55-326	LG 1021
30014901	55-326	LG 1021
300149-01	55-326	LG 1021
300457	49-816	LG 612
300736	55-743	LG 988
301011	07-009	LG 762
301272	40-144	LG 587
301272-00	40-144	LG 587
49422	07-200	LG 778
61460	55-218	LG 209
63932	07-204	LG 778
64848	07-009	LG 762
67481	49-834	LG 611
67491	49-021	LG 629
68107	49-834	LG 611
68656	56-002	LG 687
69506	55-333	LG 633
69508	49-834	LG 611
69922	55-212	LG 209
83764	49-834	LG 611
83768	49-834	LG 611
83772	49-834	LG 611
83778	49-834	LG 611
84929	56-002	LG 687
85987	49-834	LG 611
88620	49-834	LG 611
90658	56-002	LG 687
91460	55-218	LG 209
91982	56-003	LG 687
91982-1	56-003	LG 687
92420	55-212	LG 209
93720	07-200	LG 778
94282	49-021	LG 629
94299	49-806	LG 611
94362	56-003	LG 687
94774	49-816	LG 612
94775	49-812	LG 612
95213	55-214	LG 209
MCLANE		
1013B	60-009	LG 709
1060	75-120	LG 300
1063A	78-677	LG 839
2036	45-047	LG 241
2036	45-242	LG 243
2058	75-101	LG 269
2059	40-130	LG 586
2059-10	40-130	LG 586
2059HD	40-502	LG 586
4060	75-123	LG 300
7102	15-580	LG 300
MCNEW CO		
754-0935	75-092	LG 304
954-0935	75-092	LG 304
MID-STATES		
754-0145	75-145	LG 300
754-0151	75-004	LG 301
754-0178	75-179	LG 310
754-0194	75-090	LG 301
754-0201	75-441	LG 334
754-0230	75-008	LG 301
754-0234	75-441	LG 334
754-0240	75-009	LG 301
754-0241	75-012	LG 301
754-0266	75-016	LG 301
754-0293	75-018	LG 301
754-0935	75-092	LG 304
754182	75-208	LG 277
954-0145	75-145	LG 300
954-0145A	75-145	LG 300
954-0151	75-004	LG 301
954-015A	75-145	LG 300
954-0178	75-179	LG 310
954-0194	75-090	LG 301
954-0201	75-441	LG 334
954-0230	75-008	LG 301
954-0234	75-441	LG 334
954-0240	75-009	LG 301
954-0241	75-012	LG 301
954-0241A	75-012	LG 301
954-0266	75-016	LG 301
954-0266A	75-016	LG 301
954-0293	75-018	LG 301
954-0935	75-092	LG 304
MITSUBISHI		
KF05011DA	07-026	LG 772
KS02037AA002	31-105	LG 934
TR64961	33-516	LG 866
MONTGOMERY WARD		
26344	75-120	LG 300
754-0145	75-145	LG 300
754-0151	75-004	LG 301
754-0194	75-090	LG 301
754-0201	75-441	LG 334
754-0230	75-008	LG 301
754-0234	75-441	LG 334
754-0240	75-009	LG 301
754-0241	75-012	LG 301
754-0266	75-016	LG 301
754-0293	75-018	LG 301
754-0935	75-092	LG 304
954-0145	75-145	LG 300
954-0145A	75-145	LG 300
954-0151	75-004	LG 301
954-015A	75-145	LG 300
954-0194	75-090	LG 301
954-0201	75-441	LG 334
954-0230	75-008	LG 301
954-0234	75-441	LG 334
954-0240	75-009	LG 301
954-0241	75-012	LG 301
954-0241A	75-012	LG 301
954-0266	75-016	LG 301
954-0266A	75-016	LG 301
954-0293	75-018	LG 301
954-0935	75-092	LG 304
MOORE-HANDLEY		
754-0151	75-004	LG 301
954-0151	75-004	LG 301
MTD		
00030779	15-581	LG 273
00030779	15-598	LG 301
01001805	91-144	LG 454
01001805	96-677*	LG 372
01002810	198-049	LG 518
01002810	598-631*	LG 390
01002810	98-631*	LG 390
01003280	91-144	LG 454
01003280	96-677*	LG 372
01003805	91-144	LG 454
01003805	96-677*	LG 372
01004719	91-144	LG 454
01004719	96-677*	LG 372
01004719P	91-144	LG 454
01004719P	96-677*	LG 372
01005337P	596-351*	LG 408
01005337P	96-351*	LG 408
01005337P	98-091	LG 516
01005338	596-300*	LG 519
01005338	96-300*	LG 519
01005338	98-071	LG 411
01005338P	596-300*	LG 519
01005338P	96-300*	LG 519
01005338P	98-071	LG 411
01007522	396-815*	LG 521
01010168	592-015*	LG 515
01010168	92-015	LG 407
01010168-0637	592-015*	LG 515
01010168-0637	92-015	LG 407
01010168-X	592-015*	LG 515
01010168-X	92-015	LG 407
02005018-X	596-351*	LG 408
02005018-X	96-351*	LG 408
02005019	596-300*	LG 519
02005019	96-300*	LG 519
02005019	98-071	LG 411
02005019-X	596-300*	LG 519
02005019-X	96-300*	LG 519
02005020	596-373*	LG 512
02005020	98-080	LG 512
0301-000	98-019	LG 516
031203	98-019	LG 516
05002	73-100	LG 850
05002-0637	73-100	LG 850
05080A	76-073-0	LG 726
05080AP	76-073-0	LG 726
05571	73-020	LG 850
07714	98-019	LG 516
08253B	45-108	LG 894
09322	44-364	LG 728
09966	81-012	LG 802
1004719-0637	91-144	LG 454
1004719-0637	96-677*	LG 372
1005337	596-351*	LG 408
1005337	96-351*	LG 408
1005337	98-091	LG 516
1005378	15-583	LG 273
1008616	596-373*	LG 512
1008616	98-080	LG 512
10769	65-220	LG 340
14608-0637	76-018	LG 938
15296	45-135	LG 894
15296A	45-135	LG 894
1652-030	45-095	LG 855
1717048	33-335	LG 730
1726547	33-335	LG 730
1731273	75-148	LG 300
1733439	75-148	LG 300
1740056	33-335	LG 730
1751569	33-335	LG 730
17584	76-019	LG 938
17585	76-021	LG 938
17664-0637	76-020	LG 802
2005018	596-351*	LG 408
2005018	96-351*	LG 408
2005018	98-091	LG 516
30779	15-581	LG 273
30779	15-598	LG 301
31203	98-019	LG 516
3999	45-019	LG 239
4720610	198-058	LG 517
4720610	598-628*	LG 517
4720610	98-628*	LG 389
490-100-M084	198-049	LG 518
490-100-M084	598-631*	LG 390
490-100-M084	98-631*	LG 390
490-100-M087	98-050	LG 521
490-100-M088	98-066	LG 409
490-100-M115	98-068	LG 389
490-110-C119	98-090	LG 519
490-110-C129	591-635*	LG 411
490-110-C129	91-058	LG 411
490-110-C129	91-635*	LG 411
490-110-C131	96-401*	LG 404
490-110-C131	98-096	LG 404
490-110-M108	598-629*	LG 575
490-110-M108	98-093	LG 411
490-110-M108	98-629*	LG 412
490-110-M111	98-044	LG 409
490-110-M112	598-600*	LG 519
490-110-M112	98-499	LG 519
490-110-M112	98-600*	LG 85
490-110-M114	198-058	LG 517
490-110-M114	598-628*	LG 517

X

* OREGON® Gator™ replacement blade

MTD

OEM No.	OREGON	Page
490-110-M114	98-628*	LG 389
490-110-M115	198-059	LG 403
490-110-M115	598-629*	LG 575
490-110-M115	98-629*	LG 412
490-110-M117	398-672*	LG 515
490-110-M117	598-672*	LG 515
490-110-M117	98-072	LG 408
490-110-M117	98-672*	LG 408
5002	73-100	LG 850
509-0891	80-746	LG 852
51-2751	72-024	LG 1035
618-0111	82-512	LG 895
618-0112	82-511	LG 895
618-0112	85-053	LG 907
618-0116	82-512	LG 895
618-0116A	82-512	LG 895
618-0117	82-511	LG 895
618-0138	82-513-2	LG 896
618-0138A	82-513-2	LG 896
618-0142	82-513-2	LG 896
618-0142A	82-513-2	LG 896
618-0240	82-515	LG 896
618-0240A	82-515	LG 896
618-0241	82-516	LG 896
618-0282	73-827	
618-0282A	73-827	
618-0282B	73-827	
618-0282C	73-827	
618-0282D	73-827	
618-0282E	73-827	
618-0324A	82-051	LG 898
618-04125A	82-403	LG 879
618-04197A	82-051	LG 898
618-0427	82-051	LG 898
618-0427A	82-051	LG 898
618-0427C	82-051	LG 898
618-0427D	82-051	LG 898
618-0430	82-515	LG 896
618-0430A	82-515	LG 896
618-0430B	82-515	LG 896
618-0431	82-516	LG 896
618-04394	82-406	LG 880
618-04461	82-407	LG 880
618-04474	82-054	LG 898
618-04474A	82-054	LG 898
618-04495	82-054	LG 898
618-04495A	82-054	LG 898
618-04822	82-058	LG 898
618-04822A	82-058	LG 898
618-04825B	82-043	LG 899
618-04889	82-058	LG 898
618-04889A	82-058	LG 898
618-04950	82-058	LG 898
618-05016	82-043	LG 899
618-0565	82-517	LG 896
618-0574	82-517	LG 896
618-0594	82-520	LG 897
618-0595	82-518	LG 897
618-0596	82-520	LG 897
618-0596B	82-520	LG 897
618-0596C	82-520	LG 897
618-0659	82-408	LG 878
618-0671	82-519	LG 897
618-0671B	82-519	LG 897
618-3129A	82-411	LG 878
618-3129B	82-411	LG 878
618-3129C	82-411	LG 878
618-3167	82-044	LG 879
634-0021A	72-112	LG 1034
656-3045	34-066	LG 832
683-0055	76-100	LG 939
683-055	76-100	LG 939
684-04025	73-050	LG 846
684-04025A	73-050	LG 846
684-04027	73-050	LG 846
684-04027A	73-050	LG 846
706-14240	73-017	LG 848
706-15686-00-11	73-050	LG 846
706-15687	73-016	LG 846
706-15687-01	73-016	LG 846
706-15688	73-016	LG 846
706-15711	75-148	LG 300
706-15944-00-10	73-020	LG 850
706-16276	45-019	LG 239
706-16835	55-800	LG 934
706-18796	45-019	LG 239
710-0890	80-743	LG 852
710-0890A	80-743	LG 852
710-0891	80-746	LG 852
712-0417	04-015	LG 899
712-0417A	04-015	LG 899
712-0417AP	04-015	LG 899
713-0132	02-190	LG 676
713-0139	02-188	LG 676
713-0154	02-193	LG 676
713-0723	02-191	LG 676
714-0138	02-531	
714-04040	02-901	LG 853
714-0868	02-535	
717-04080	33-126-1	LG 736
717-04080	33-139	LG 736
717-04174	33-134	LG 736
717-04174A	33-134	LG 736
717-04183	33-255	LG 736
717-0678	76-110	LG 726
717-0900	82-501	LG 894
717-0900A	82-501	LG 894
717-0906	82-500	LG 893
717-0906A	82-500	LG 893
717-0912	82-502	LG 894
717-0913	82-503	LG 895
717-0949	33-110	LG 735
717-1425	84-014	LG 856
717-1434	33-110	LG 735
717-1459	33-112	LG 735
717-1554	51-014	LG 941
717-1708	33-125-1	LG 736
7171709	33-139	LG 736
717-1709	33-126-1	LG 736
717-1709	33-139	LG 736
719-0949	33-110	LG 735
720-0241	81-012	LG 802
720-04072A	81-012	LG 802
721-0286	73-016	LG 846
721-0287	73-016	LG 846
723-0156	45-104	LG 939
723-0179	45-114	LG 938
723-0383	42-555	LG 803
723-0383	42-557	LG 803
723-0405	83-014	LG 819
723-0448A	45-132	LG 939
723-0448AP	45-132	LG 939
723-0471	42-005	LG 744
723-3018	45-104	LG 939
723-3018	45-111	LG 939
725-0201	42-008	LG 945
725-0267	33-386	LG 942
725-0267A	33-386	LG 942
725-0267AP	33-386	LG 942
725-0268	33-240	LG 948
725-04019	33-106	LG 943
725-04175	33-083	LG 947
725-04228	33-074	LG 944
725-04258	33-083	LG 947
725-0426	33-330	LG 729
725-0426	33-331	LG 730
725-0530	33-330	LG 729
725-0530	33-331	LG 730
725-0530	33-337	LG 730
725-0771	33-330	LG 729
725-0771	33-331	LG 730
725-0771	33-337	LG 730
725-0803B	33-382	LG 947
725-0803C	33-382	LG 947
725-1396	33-399	LG 944
725-1426	33-330	LG 729
725-1426	33-331	LG 730
725-1426	33-335	LG 730
725-1426	33-337	LG 730
725-1426A	33-331	LG 730
725-1426A	33-335	LG 730
725-1426P	33-335	LG 730
725-1648	33-242	LG 729
725-1657	33-084	LG 948
725-1657A	33-084	LG 948
725-1660	33-089	LG 946
725-1741	33-376	LG 942
725-1745	33-099	LG 946
725-3163	33-152	LG 942
725-3163P	33-152	LG 942
725-3164A	33-026	LG 947
725-3164AP	33-026	LG 947
725-3164s	33-026	LG 947
725-3166	33-019	LG 948
726-0106	04-721	
727-0162	83-300	LG 819
731-0374	45-113	LG 242
731-04869	73-833	LG 855
731-04869A	73-833	LG 855
731-04894	73-831	LG 856
731-04894A	73-831	LG 856
731-04894B	73-831	LG 856
731-04894C	73-831	LG 856
731-04894D	73-831	LG 856
731-04896	73-829	LG 856
731-04896A	73-829	LG 856
731-04896B	73-829	LG 856
731-04913	73-828	LG 856
731-05632	33-256	LG 946
731-06451	73-830	LG 856
731-0722	73-017	LG 848
731-0778	73-017	LG 848
731-0780	73-016	LG 846
731-07804	73-016	LG 846
731-0780A	73-016	LG 846
731-0781	73-016	LG 846
731-07812	73-016	LG 846
731-0781A	73-016	LG 846
731-0782	73-016	LG 846
731-0782A	73-016	LG 846
731-0812	73-017	LG 848
731-0823	60-008	LG 703
731-0851	73-832	LG 855
731-0851A	73-832	LG 855
731-1033	73-017	LG 848
731-1313	73-834	LG 856
731-1313A	73-834	LG 856
731-1313B	73-834	LG 856
731-1313C	73-834	LG 856
731-2643	73-039	LG 846
731-3005	72-319	LG 1042
732-0307	84-010	LG 913
732-0307A	84-010	LG 913
732-04280B	05-023	LG 914
732-0429A	05-070	LG 914
732-0594A	05-001	LG 913
734-0211	71-400	LG 956
734-0330	71-105	LG 957
734-04039	72-015	LG 1039
734-04039A	72-015	LG 1039
734-04082	72-072	LG 1035
734-04155	72-025	LG 1039
734-04223	72-078	
734-04223A	72-078	
734-04223A	72-112	LG 1034
734-0456	71-103	LG 956
734-0480	72-430	LG 1034
734-0973	72-318	LG 1042
734-1608	72-054	LG 1034
734-1656	72-054	LG 1034
734-1781	72-054	LG 1034
734-1782	72-054	LG 1034
734-1855	72-054	LG 1034
734-1976	72-024	LG 1035
734-2042	72-073	LG 1035
734-3058	72-308-1	LG 1042
734-30586	72-308-1	LG 1042
734-3058B	72-308-1	LG 1042
734-973	72-318	LG 1042
735-0149	07-392	LG 767
735-0243	76-075	LG 727
735-0243B	76-075	LG 727
736-0524B	65-009	LG 341
738-04124	80-749	LG 853
738-04124A	80-749	LG 853
738-04155	80-019	LG 852
738-0707	85-010	
738-0707A	85-010	
738-0919	76-044	LG 940
738-0919A	76-044	LG 940
741-0124	45-257	LG 245
741-0124A	45-257	LG 245
741-0136	45-037	LG 242
741-0141	45-000	LG 237
741-0155	45-242	LG 243
741-0170	45-278	LG 240
741-0185	45-048	LG 854
741-0192	45-278	LG 240
741-0199	45-082	LG 854
741-0225	45-100	LG 239
741-0225P	45-100	LG 239
741-0244	45-278	LG 240
741-0262	45-112	LG 241
741-0293	45-092	LG 854
741-0310	45-050	LG 224
741-0312	45-070	LG 242
741-0313	45-095	LG 855
741-0404	45-037	LG 242
741-04136	45-834	LG 242
741-04136A	45-834	LG 242
741-04136B	45-834	LG 242
741-0471	45-833	LG 855
741-0475	45-833	LG 855
741-0484	45-112	LG 241
741-0487	45-095	LG 855
741-0487A	45-095	LG 855
741-0487AP	45-095	LG 855
7410487C	45-095	LG 855
741-0487C	45-095	LG 855
741-0490	45-082	LG 854
741-0494	45-276	LG 231
741-0523	45-045	LG 249
741-0524P	45-257	LG 245
741-0563	45-130	LG 232
741-0563	45-273	
741-0569	45-047	LG 241
741-0656	45-071	LG 242
741-0656A	45-071	LG 242
741-0659	45-046	LG 241
741-0660	45-072	LG 242
741-0660A	45-072	LG 242
741-0661	45-280	LG 231
741-0661A	45-280	LG 231
741-0661B	45-280	LG 231
741-0662	45-281	LG 240
741-0663	45-279	LG 855
741-0706	45-075	LG 241
741-0919	45-259	LG 224
741-0977	45-257	LG 245

X

* OREGON® Gator™ replacement blade

2019 OEM X-Reference

OEM No.	OREGON	Page
MTD		
741-0990	45-074	LG 242
741-0990A	45-074	LG 242
741-0990B	45-074	LG 242
741-099B	45-074	LG 242
742-0122	98-019	LG 516
742-0122A	98-019	LG 516
742-0171	98-037	LG 574
742-0171B	98-037	LG 574
742-025052	195-005	LG 373
742-025052	195-019	LG 466
742-025052	195-032	LG 425
742-025052	195-039	LG 430
742-025052	195-048	LG 430
742-025052	596-900*	LG 380
742-025052	96-900*	LG 526
742-03002-0637	91-414	LG 405
742-0306	98-002	LG 401
742-0306	98-102*	LG 410
742-0306A	98-002	LG 401
742-0306A	98-102*	LG 410
742-0322	91-057	LG 409
742-0322	96-697*	LG 517
742-0323	98-044	LG 409
742-04015	98-082	LG 513
742-04043	598-640*	LG 405
742-04043	98-640*	LG 574
742-04049	98-637*	LG 512
742-04053	198-086	LG 565
742-04053	591-938*	LG 407
742-04053	91-938*	LG 514
742-04053A	198-086	LG 565
742-04053A	591-938*	LG 407
742-04053A	91-938*	LG 514
742-04053B	198-086	LG 565
742-04053B	591-938*	LG 407
742-04053B	91-938*	LG 514
742-04053C	198-086	LG 565
742-04053C	591-938*	LG 407
742-04053C	91-938*	LG 514
742-04056	591-938*	LG 407
742-04056	91-938*	LG 514
742-04056	98-097	LG 514
742-04056-0637	591-938*	LG 407
742-04056-0637	91-938*	LG 514
742-04056-0637	98-097	LG 514
742-04056A	591-938*	LG 407
742-04056A	91-938*	LG 514
742-04056A	98-097	LG 514
742-04056B	591-938*	LG 407
742-04056B	91-938*	LG 514
742-04056B	98-097	LG 514
742-04056B-0637	591-938*	LG 407
742-04056B-0637	91-938*	LG 514
742-04056B-0637	98-097	LG 514
742-04056C	591-938*	LG 407
742-04056C	91-938*	LG 514
742-04056C	98-097	LG 514
742-04056C-0637	98-097	LG 514
742-04068	596-387*	LG 407
742-04068	96-387*	LG 515
742-04068	98-087	LG 407
742-04068C	596-387*	LG 407
742-04068C	96-387*	LG 515
742-04068C	98-087	LG 407
742-04087	198-153	LG 520
742-04087	598-629*	LG 575
742-04087	98-629*	LG 412
742-04101	591-635*	LG 411
742-04101	91-058	LG 411
742-04101	91-635*	LG 411
742-04124-X	98-637*	LG 512
742-04125-X	598-640*	LG 405
742-04125-X	98-640*	LG 574
742-04126	98-090	LG 519
742-04135-4045	94-322	LG 520
742-04135-4045	96-607*	LG 571
742-04154	98-094	LG 514
742-04154	98-671*	LG 514
742-04154A	98-094	LG 514
742-04154A	98-671*	LG 514
742-04244	96-401*	LG 404
742-04244	98-096	LG 404
742-04244A	96-401*	LG 404
742-04244A	98-096	LG 404
742-04276	198-049	LG 518
742-04276	598-631*	LG 390
742-04276	98-631*	LG 390
742-04276S	198-049	LG 518
742-04276S	598-631*	LG 390
742-04276S	98-631*	LG 390
742-04290	96-401*	LG 404
742-04290	98-096	LG 404
742-04290-X	96-401*	LG 404
742-04308	598-629*	LG 575
742-04308	98-093	LG 411
742-04308	98-629*	LG 412
742-04312	598-629*	LG 575
742-04312	98-067	LG 520
742-04312	98-629*	LG 412
742-04361	96-401*	LG 404
742-04374	96-350*	LG 412
742-04380	598-631*	LG 390
742-04380	98-631*	LG 390
742-04380-0684	598-631*	LG 390
742-04380-0684	98-631*	LG 390
742-04410	598-629*	LG 575
742-04410	98-629*	LG 412
742-04415	596-300*	LG 519
742-04415	96-300*	LG 519
742-04415	98-071	LG 411
742-04415-X	596-300*	LG 519
742-04415-X	96-300*	LG 519
742-04415-XG	596-300*	LG 519
742-04415-XG	96-300*	LG 519
742-04416-X	596-351*	LG 408
742-04416-X	96-351*	LG 408
742-04418	396-815*	LG 521
742-04418-0637	396-815*	LG 521
742-0473	98-044	LG 409
742-0473A	98-044	LG 409
742-0486	98-486	LG 512
742-0486A	98-486	LG 512
742-0487	98-487	LG 513
742-0487A	98-487	LG 513
742-0490	98-002	LG 401
742-0490	98-102*	LG 410
742-0493	98-493	LG 409
742-0496	98-496	LG 515
742-0496A	98-496	LG 515
742-0499	598-600*	LG 519
742-0499	98-499	LG 519
742-0499	98-600*	LG 85
742-0499A	598-600*	LG 519
742-0499A	98-499	LG 519
742-0499A	98-600*	LG 85
742-0503	598-600*	LG 519
742-0503	98-600*	LG 85
742-0504	98-044	LG 409
742-0504A	98-044	LG 409
742-0508	598-600*	LG 519
742-0508	98-499	LG 519
742-0508	98-600*	LG 85
742-0508A	598-600*	LG 519
742-0508A	98-499	LG 519
742-0508A	98-600*	LG 85
742-0521	98-002	LG 401
742-0521	98-102*	LG 410
742-0522	98-005	LG 521
742-0537	98-537	LG 516
742-0538	598-600*	LG 519
742-0538	98-600*	LG 85
742-0542	98-057	LG 513
742-0543	98-056	LG 512
742-0563	98-007	LG 401
742-0563	98-102*	LG 410
742-0572	98-005	LG 521
742-0610	198-058	LG 517
742-0610	598-628*	LG 517
742-0610	98-628*	LG 389
742-0610A	198-058	LG 517
742-0610A	598-628*	LG 517
742-0610A	98-628*	LG 389
742-0610A-0637	198-058	LG 517
742-0610A-0637	598-628*	LG 517
742-0610A-0637	98-628*	LG 389
742-0611	198-063	LG 513
742-0611	598-640*	LG 405
742-0611	98-640*	LG 574
742-0611A	198-063	LG 513
742-0611A	598-640*	LG 405
742-0611A	98-640*	LG 574
742-0611-X	598-640*	LG 405
742-0611-X	98-640*	LG 574
742-0612	98-061	LG 404
742-0612	98-637*	LG 512
742-0612A	98-061	LG 404
742-0612A	98-637*	LG 512
742-0612-X	98-637*	LG 512
7420616	198-059	LG 403
7420616	598-629*	LG 575
7420616	98-629*	LG 412
742-0616A	198-059	LG 403
742-0616A	598-629*	LG 575
742-0616A	98-629*	LG 412
742-0620	98-001	LG 517
742-0621	98-002	LG 401
742-0621	98-102*	LG 410
742-0622	98-005	LG 521
742-0623	598-064*	LG 514
742-0623	98-064-1	LG 514
742-0640	98-068	LG 389
742-0642	98-050	LG 521
742-0642A	98-050	LG 521
742-0644	98-054	LG 574
742-0644	98-634*	LG 405
742-0645	98-069	LG 404
742-0645	98-670*	LG 512
742-0654	198-052	LG 389
742-0654	598-628*	LG 517
742-0654	98-628*	LG 389
742-0656	598-629*	LG 575
742-0656	98-093	LG 411
742-0656	98-629*	LG 412
742-0677	398-672*	LG 515
742-0677	598-672*	LG 515
742-0677	98-072	LG 408
742-0677	98-672*	LG 408
742-0677A	398-672*	LG 515
742-0677A	598-672*	LG 515
742-0677A	98-072	LG 408
742-0677A	98-672*	LG 408
742-0677B	398-672*	LG 515
742-0677B	598-672*	LG 515
742-0677B	98-072	LG 408
742-0677B	98-672*	LG 408
742-0720	98-001	LG 517
742-0721	98-007	LG 401
742-0721	98-102*	LG 410
742-0722	98-005	LG 521
742-0738	98-065	LG 515
742-0739	92-140	LG 516
742-0740	98-066	LG 409
742-0741	198-049	LG 518
742-0741	598-631*	LG 390
742-0741	98-631*	LG 390
742-0741A	198-049	LG 518
742-0741A	598-631*	LG 390
742-0741A	98-631*	LG 390
742-0741A-X	598-631*	LG 390
742-0741A-X	98-631*	LG 390
742-0741-S	598-631*	LG 390
742-0741-S	98-631*	LG 390
742-0742	98-051	LG 521
742-0742A	98-051	LG 521
742-0742A-0637	98-051	LG 521
742-3002	91-414	LG 405
742-3011	91-330	LG 513
742-3011-0637	91-330	LG 513
742-3018	91-332	LG 412
742-3018	96-350*	LG 412
742-3036	596-373*	LG 512
742-3036	91-073	LG 512
742-4360	598-629*	LG 575
742-4360	98-629*	LG 412
742-493	98-493	LG 409
743-0112	19-005	LG 983
7458	98-019	LG 516
746-0376A	65-225	LG 341
746-04007	46-337	LG 713
746-04120	60-059	LG 706
746-04143	60-062	LG 706
746-04173	60-527	LG 714
746-04173A	60-527	LG 714
746-04173B	60-527	LG 714
746-04173C	60-527	LG 714
746-0417A	60-527	LG 714
746-04206	60-528	LG 708
746-04206A	60-528	LG 708
746-04229	46-032	LG 705
746-04229B	46-032	LG 705
746-04230	46-033	LG 714
746-04230A	46-033	LG 714
746-04236	46-034	LG 714
746-04237	46-035	LG 714
746-04256	46-036	LG 714
746-04352	60-137	LG 705
746-04352A	60-137	LG 705
746-04477	46-038	LG 715
746-04528A	46-039	LG 705
746-04528B	46-039	LG 705
746-04556	60-140	LG 715
746-04618	46-041	LG 706
746-04618A	46-041	LG 706
746-04640	46-042	LG 715
746-04642	46-043	LG 715
746-04642A	46-043	LG 715
746-0472	60-012-0	LG 712
746-0474	46-319	LG 712
746-0477A	46-317	LG 707
746-0506	46-002	LG 856
746-0550	46-320	LG 707
746-0552	46-310	LG 713
746-0553	46-321	LG 707
746-0554	46-316	LG 707
746-0573	46-002	LG 856
746-0613	60-002	LG 710
746-0613A	60-002	LG 710
746-0614	60-124	LG 710
746-0614A	60-124	LG 710
746-0616	60-003	LG 710
746-0616A	60-003	LG 710
746-0630	60-021	LG 706
746-0630A	60-021	LG 706
746-0632	46-319	LG 712
746-0633	60-012-0	LG 712
746-0634	60-014	LG 712
746-0634A	60-014	LG 712
746-0671	46-319	LG 712
746-0671A	46-319	LG 712

X

* OREGON® Gator™ replacement blade

OEM No.	OREGON	Page
MTD		
746-0671A	60-012-0	LG 712
746-0672	60-012-0	LG 712
746-0713	46-004	LG 707
746-0713A	46-004	LG 707
746-0841	60-012-0	LG 712
746-0842	46-319	LG 712
746-0842	46-323	LG 712
746-0843	46-319	LG 712
746-0875	60-005	LG 704
746-0876	60-007	LG 704
746-0896	46-339	LG 710
746-0897	46-044	LG 710
746-0897A	46-044	LG 710
746-0898	46-006	LG 712
746-0898A	46-006	LG 712
746-0898B	46-006	LG 712
746-0901	46-338	LG 704
746-0902	46-046	LG 704
746-0903	46-047	LG 704
746-0910A	46-005	LG 707
746-0912	60-045	LG 707
746-0949	46-048	LG 711
746-0949A	46-048	LG 711
746-0951	46-341	LG 711
746-0951A	46-341	LG 711
746-0952	46-340	LG 711
746-0956	46-049	LG 705
746-0956A	46-049	LG 705
746-0956B	46-049	LG 705
746-0970	46-050	LG 711
746-1085	60-039	LG 706
746-1085A	60-039	LG 706
746-1088	60-041	LG 711
746-1100	60-042	LG 712
746-1130	46-051	LG 712
748-0108	45-277	LG 242
748-0143	45-092	LG 854
748-0151	45-082	LG 854
748-0169	45-094	LG 249
748-0227	45-088	LG 240
748-0227A	45-088	LG 240
748-0229	45-088	LG 240
748-0235	65-220	LG 340
748-0269	45-277	LG 242
748-0283	65-220	LG 340
748-0300	65-221	LG 341
748-0300B	65-221	LG 341
748-0323	65-224	LG 341
748-0323	80-146	LG 341
748-0324	65-226	LG 341
748-0365	65-228	LG 341
748-0376B	65-225	LG 341
748-0376C	65-225	LG 341
748-0376E	65-225	LG 341
748-0855	45-091	LG 249
750-0204	45-082	LG 854
751-0101A	75-148	LG 300
751-0171	07-404	LG 766
751-0603	07-309	LG 772
751-10630	33-256	LG 946
751-10639	49-326	LG 768
751-10639A	49-326	LG 768
751-10645	33-746	LG 920
751-10645A	33-746	LG 920
751-10658	31-119	LG 924
751-10955	31-120	LG 924
751-11021	49-328	LG 606
751-11021A	49-328	LG 606
751-11196	33-745	LG 920
751-11219	49-331	LG 604
751-11219A	49-331	LG 604
751-11310	31-121	LG 924
751-11332	49-329	LG 604
751-11332A	49-329	LG 604
751-11355	49-327	LG 606
751-11355A	49-327	LG 606
751-12760A	49-329	LG 604
751-12762A	49-331	LG 604
751-12788A	49-328	LG 606
751-14321	49-327	LG 606
751-3054	07-390	LG 766
751-3111	07-309	LG 772
753-0210	65-220	LG 340
753-0343B	65-222	LG 341
753-0348B	65-222	LG 341
753-04232	43-021	LG 934
753-04517	76-044	LG 940
753-0462	65-224	LG 341
753-0463	65-226	LG 341
753-0484	80-146	LG 341
753-0485	65-226	LG 341
753-04856A	72-015	LG 1039
753-04856A	72-308-1	LG 1042
753-05319	82-500	LG 893
753-05549	04-015	LG 899
753-05550	45-257	LG 245
753-0583	65-221	LG 341
753-0583	80-145	LG 341
753-0613	73-016	LG 846
753-0626	73-058	LG 848
753-0635	44-366	LG 837
753-0642-0637	76-018	LG 938
753-08171	78-065	LG 832
754-0101	75-148	LG 300
754-0101A	75-148	LG 300
754-0101B	75-148	LG 300
754-0125	15-589	LG 273
754-0125A	15-589	LG 273
754-0131	75-365	LG 862
754-0142	15-590	LG 300
754-0145	75-145	LG 300
754-0145A	75-145	LG 300
754-0151	75-004	LG 301
754-0178	75-179	LG 310
754-0181	15-593	LG 301
7540182	75-208	LG 277
754-0194	75-090	LG 301
754-0197	75-079	LG 301
754-0201	75-441	LG 334
754-0230	75-008	LG 301
754-0234	75-441	LG 334
754-0240	75-009	LG 301
754-0241	175-012	LG 301
754-0241	75-012	LG 301
754-0241A	75-012	LG 301
754-0254	75-120	LG 300
754-0266	75-016	LG 301
754-0266A	75-016	LG 301
754-0280	175-002	LG 301
754-0280	75-002	LG 301
754-0280A	75-002	LG 301
754-0281	75-281	LG 301
754-0293	75-018	LG 301
754-0329	75-029	LG 253
754-0329A	175-029	LG 303
754-0329A	75-029	LG 253
754-0339	75-021	LG 274
754-0342	75-023	LG 302
754-0343	75-020	LG 302
754-0346	75-091	LG 302
754-0349	75-021	LG 274
754-0350	75-035	LG 302
754-0355	75-023	LG 302
754-0358	75-024	LG 302
754-0362	75-118	LG 302
754-0364	175-025	LG 302
754-0364	75-025	LG 253
754-0367	75-157	LG 251
754-0369	75-027	LG 302
754-0370	175-119	LG 302
754-0370	75-119	LG 302
754-0371	175-028	LG 302
754-0371	75-028	LG 302
754-0371A	75-028	LG 302
754-04001	75-673	LG 305
754-04001A	75-673	LG 305
754-04002	75-709	LG 305
754-04014	15-604	LG 275
754-04032	75-249	LG 305
754-04032A	75-249	LG 305
754-04032B	75-249	LG 305
754-04033	75-706	LG 256
754-04041	15-013	LG 256
754-04043	75-886	LG 276
754-04045	75-714	LG 276
754-04048	75-716	LG 276
754-04050	115-219	LG 305
754-04055	15-606	LG 275
754-04060	75-813	LG 276
754-04060B	75-813	LG 276
754-04062	75-600	LG 276
754-04077	75-814	LG 276
754-04093	15-053	LG 305
754-04118	75-815	LG 277
754-04122	15-025	LG 255
754-04142	15-026	LG 277
754-04201	15-052	LG 315
754-04207	15-613	LG 305
754-04219	15-027	LG 306
754-04240	15-028	LG 277
754-04252	15-132	LG 306
754-04259	15-133	LG 306
754-04259A	15-133	LG 306
754-0427	75-168	LG 310
754-0430	75-158	LG 251
754-0430A	75-158	LG 251
754-0430B	75-158	LG 251
754-0431	75-158	LG 251
754-0433	75-029	LG 253
754-0434	75-999	LG 253
754-0438	15-616	LG 303
754-0439	75-159	LG 303
754-0440	75-161	LG 255
754-0441	75-160	LG 303
754-0443	75-109	LG 303
754-0443A	75-109	LG 303
754-0446	75-674	LG 303
754-0453	75-675	LG 303
754-0461	75-824	LG 274
754-0465	75-249	LG 305
754-0467	175-995	LG 303
754-0467	75-995	LG 303
754-0467A	75-995	LG 303
754-0468	175-993	LG 303
754-0468	75-993	LG 303
754-0472	75-361	LG 254
754-0474	75-362	LG 256
754-0475	75-363	LG 304
754-0476	75-364	LG 304
754-0483	15-619	LG 274
754-0485	75-263	LG 304
754-0486	75-264	LG 304
754-0486A	75-264	LG 304
754-0497	75-676	LG 304
754-0498	75-677	LG 304
754-0640	75-823	LG 254
754-0641	15-623	LG 274
754-0642	175-994	LG 304
754-0642	75-994	LG 304
754-066A	75-016	LG 301
754-0935	75-092	LG 304
754-3001	15-588	LG 275
754-3004	15-625	LG 275
754-3045	15-627	LG 275
754-3048	15-628	LG 275
754-3053	15-629	LG 304
756-0116	34-030	LG 821
756-0116	78-019	LG 831
756-0116A	78-019	LG 831
756-0117	34-006	LG 821
756-0124	44-101	LG 837
756-0137	34-005	LG 821
756-0166	34-031	LG 821
756-0178	34-028	LG 821
756-0183	34-018	LG 821
756-0199	34-002	LG 821
756-0217	34-010	LG 831
756-0218	34-029	LG 821
756-0225	34-008	LG 821
756-0226	34-038	LG 821
756-0240	34-012	LG 821
756-0251	44-101	LG 837
756-0313	34-001	LG 821
756-0365	78-050	LG 831
756-0399	34-036	LG 821
756-04010	44-365	LG 837
756-04129	78-065	LG 832
756-04129B	78-065	LG 832
756-04129C	78-065	LG 832
756-04209	34-030	LG 821
756-04209	78-019	LG 831
756-04216	34-065	LG 837
756-04224	78-028	LG 831
756-0437	34-013	LG 824
756-0437	34-014	LG 831
756-0486	44-100	LG 837
756-0488	44-366	LG 837
756-0492	34-035	LG 821
756-0499	34-036	LG 821
756-0515	34-015	LG 821
756-0515	78-114	LG 829
756-0556	44-368	LG 837
756-0603	44-101	LG 837
756-0627	34-041	LG 831
756-0627B	34-041	LG 831
756-0627D	34-041	LG 831
756-0643	34-014	LG 831
756-0643A	34-014	LG 831
756-0969	44-102	LG 85
756-0977	44-101	LG 837
756-0980	44-369	LG 837
756-0981	78-028	LG 831
756-0981A	78-028	LG 831
756-0981B	78-028	LG 831
756-0982	44-365	LG 837
756-0982A	44-365	LG 837
756-0982B	44-365	LG 837
756-0983	44-367	LG 838
756-0983A	44-365	LG 837
756-0983A	44-367	LG 838
756-0983B	44-367	LG 838
756-1035A	34-031	LG 821
756-1202	44-103	LG 838
756-1208	78-029	LG 831
756-1227	78-066	LG 838
756-1229	78-046	LG 826
756-1229	78-098	LG 832
756-3105	78-047	LG 832
759-04019	98-082	LG 513
759-04047	596-387*	LG 407
759-04047	96-387*	LG 515
759-04047	98-087	LG 407
759-04081	591-635*	LG 411
759-04081	91-058	LG 411
759-04081	91-635*	LG 411
759-3411	91-442	LG 518
759-3812	91-414	LG 405
759-3819	91-330	LG 513
759-3824	91-332	LG 412

X

* OREGON® Gator™ replacement blade

2019 OEM X-Reference

MTD

OEM No.	OREGON	Page
759-3824	96-350*	LG 412
759-3830	591-635*	LG 411
759-3830	91-058	LG 411
759-3830	91-635*	LG 411
759-3830-X	591-635*	LG 411
759-3830-X	91-635*	LG 411
759-3839	91-442	LG 518
759-3929	596-373*	LG 512
759-3929	91-073	LG 512
759-3939	596-373*	LG 512
759-3939	91-073	LG 512
761-0168	82-100	LG 802
764-0221	86-025	LG 781
764-0221P	86-025	LG 781
7714	98-019	LG 516
781-0080	40-316	LG 586
781-0080-0637	40-316	LG 586
781-0748	40-009	LG 588
781-0748-0637	40-009	LG 588
781-682039	07-017	LG 1022
784-5030	73-020	LG 850
784-5038	73-020	LG 850
784-5038A	73-020	LG 850
784-5038B	73-020	LG 850
784-5038B-0637	73-020	LG 850
784-5038B-0689	73-020	LG 850
784-5039	73-020	LG 850
784-5485	73-050	LG 846
784-5485-0498	73-050	LG 846
784-5576	73-054	LG 848
784-5576-0637	73-054	LG 848
784-5579	73-055	LG 848
784-5579	73-058	LG 848
784-5579-0638	73-058	LG 848
784-5579-0692	73-058	LG 848
784-5579A	73-055	LG 848
784-5579A	73-058	LG 848
784-5579A-0629	73-058	LG 848
784-5579A-0662	73-058	LG 848
784-5579A-0665	73-058	LG 848
784-5579A-0667	73-058	LG 848
784-5579A-0689	73-058	LG 848
784-5579A-0691	73-058	LG 848
784-5580	73-031	LG 850
784-5580-0483	73-031	LG 850
784-5580-0637	73-031	LG 850
784-5580-0637	73-826	
784-5580-0638	73-031	LG 850
784-5580-0662	73-031	LG 850
784-5580-0665	73-031	LG 850
784-5580-0689	73-031	LG 850
784-5580-0691	73-031	LG 850
784-5580-0721	73-031	LG 850
784-5580-0729	73-031	LG 850
784-5580-4043	73-031	LG 850
784-5580-4044	73-031	LG 850
784-5581A	73-057	LG 848
784-5581A-0483	73-057	LG 848
784-5581A-0637	73-057	LG 848
784-5581A-0662	73-057	LG 848
784-5581A-0687	73-057	LG 848
784-5582	73-055	LG 848
784-5582A	73-055	LG 848
787-01503	40-316	LG 586
790-00117-0637	73-054	LG 848
790-00118-0637	73-055	LG 848
790-00119-0637	73-056	LG 848
790-00120-0637	73-057	LG 848
790-00121	73-058	LG 848
790-00121-0606	73-058	LG 848
790-00121-0637	73-058	LG 848
790-00121-0638	73-058	LG 848
790-00121-0691	73-058	LG 848
790-00121-0709	73-058	LG 848
790-00121-0721	73-058	LG 848
790-00121-4041	73-058	LG 848
790-00121-4044	73-058	LG 848
791-153066B	55-803	LG 1022
791-180814B	55-812	LG 1022
791-181468B	55-182	LG 1023
791-181597	43-021	LG 934
791-613223	40-141	LG 585
791-613223B	40-141	LG 585
791-683974B	49-088-0	LG 631
811-0185	60-016	LG 710
831-0798	60-008	LG 703
831-0823	60-008	LG 703
831-0823A	60-008	LG 703
831-0823A	60-015	LG 716
910-0890	80-743	LG 852
910-0890A	80-743	LG 852
910-0891	80-746	LG 852
912-0417A	04-015	LG 899
913-0139	02-188	LG 676
913-0154	02-193	LG 676
913-0723	02-191	LG 676
914-04040	02-901	LG 853
914-04040A	02-901	LG 853
914-0868	02-535	
915-0595A	82-518	LG 897
917-04080	33-126-1	LG 736
917-04174	33-134	LG 736
917-04174A	33-134	LG 736
917-04622	33-255	LG 736
917-0678	76-110	LG 726
917-0900A	82-501	LG 894
917-0906	82-500	LG 893
917-0906A	82-500	LG 893
917-0912	82-502	LG 894
917-0913	82-503	LG 895
917-0949	33-110	LG 735
917-1425	84-014	LG 856
917-1434	33-110	LG 735
917-1459	33-112	LG 735
917-1708	33-125-1	LG 736
9171709	33-139	LG 736
917-1709	33-126-1	LG 736
917-1709	33-139	LG 736
918-0116	82-512	LG 895
918-0116B	82-512	LG 895
918-0116C	82-512	LG 895
918-0117	82-511	LG 895
918-0117A	82-511	LG 895
918-0117B	82-511	LG 895
918-0138	82-513-2	LG 896
918-0138A	82-513-2	LG 896
918-0138C	82-513-2	LG 896
918-0142	82-513-2	LG 896
918-0142A	82-513-2	LG 896
918-0142C	82-513-2	LG 896
918-0240	82-515	LG 896
918-0240A	82-515	LG 896
918-0240C	82-515	LG 896
918-0241	82-516	LG 896
918-0241B	82-516	LG 896
918-0282D	73-827	
918-0282E	73-827	
918-0324	82-051	LG 898
918-04125	82-403	LG 879
918-04125A	82-403	LG 879
918-04126B	82-403	LG 879
918-04197	82-051	LG 898
918-04197A	82-051	LG 898
918-0427	82-051	LG 898
918-0427A	82-051	LG 898
918-0427C	82-051	LG 898
918-0427D	82-051	LG 898
918-0430	82-515	LG 896
918-0430A	82-515	LG 896
918-0430B	82-515	LG 896
918-0430C	82-515	LG 896
918-0431	82-516	LG 896
918-0431A	82-516	LG 896
918-0431B	82-516	LG 896
918-0431C	82-516	LG 896
918-04394	82-406	LG 880
918-04461	82-407	LG 880
918-04474	82-054	LG 898
918-04474A	82-054	LG 898
918-04495	82-054	LG 898
918-04495A	82-054	LG 898
918-04822	82-058	LG 898
918-04822A	82-058	LG 898
918-04825	82-043	LG 899
918-04889	82-058	LG 898
918-04889A	82-058	LG 898
918-05016	82-043	LG 899
918-0574	82-517	LG 896
918-0574C	82-517	LG 896
918-0593	82-518	LG 897
918-0593A	82-518	LG 897
918-0595	82-518	LG 897
918-0595B	82-518	LG 897
918-0596	82-520	LG 897
918-0596B	82-520	LG 897
918-0596C	82-520	LG 897
918-0659	82-408	LG 878
918-0671	82-519	LG 897
918-0671B	82-519	LG 897
918-0671D	82-519	LG 897
918-3129A	82-411	LG 878
918-3129B	82-411	LG 878
918-3129C	82-411	LG 878
918-3167	82-044	LG 879
923-0156	45-104	LG 939
923-0179	45-114	LG 938
923-0383	42-557	LG 803
923-0448A	45-132	LG 939
923-3018	45-111	LG 939
925-0201	42-008	LG 945
925-0267	33-386	LG 942
925-0267A	33-386	LG 942
9250267B	33-386	LG 942
925-0267B	33-386	LG 942
925-0268	33-240	LG 948
925-04019	33-106	LG 943
925-04039	33-028	LG 947
925-04175	33-083	LG 947
92504228	33-074	LG 944
925-04228	33-074	LG 944
925-04258	33-083	LG 947
925-0530	33-330	LG 729
925-0530	33-331	LG 730
925-0771	33-330	LG 729
925-0771	33-331	LG 730
925-0771	33-337	LG 730
925-0803C	33-382	LG 947
925-1396	33-399	LG 944
925-1396A	33-399	LG 944
925-1426	33-330	LG 729
925-1426	33-331	LG 730
925-1426	33-335	LG 730
925-1426	33-337	LG 730
925-1426A	33-330	LG 729
925-1426A	33-331	LG 730
925-1426A	33-335	LG 730
925-1426A	33-337	LG 730
925-1648	33-242	LG 729
925-1657A	33-084	LG 948
925-1660	33-089	LG 946
925-1740	33-376	LG 942
925-1741	33-376	LG 942
925-1745	33-099	LG 946
925-3163	33-152	LG 942
925-3164A	33-026	LG 947
925-3166	33-019	LG 948
925-3169A	33-028	LG 947
926-0106	04-721	
931-0374	45-113	LG 242
931-0780A	73-016	LG 846
931-0782A	73-016	LG 846
932-0429A	05-070	LG 914
932-0594A	05-001	LG 913
9322	44-364	LG 728
934-04039	72-015	LG 1039
934-04223	72-078	
935-0149	07-392	LG 767
935-0243B	76-075	LG 727
938-04124A	80-749	LG 853
938-0707A	85-010	
938-0919	76-044	LG 940
941-0124	45-257	LG 245
941-0124A	45-257	LG 245
941-0141	45-000	LG 237
941-0155	45-242	LG 243
941-0168B	82-100	LG 802
941-0168D	82-100	LG 802
941-0170	45-278	LG 240
941-0185	45-048	LG 854
941-0199	45-082	LG 854
941-0225	45-100	LG 239
941-0244	45-278	LG 240
941-0293	45-092	LG 854
941-0310	45-050	LG 224
941-0312	45-070	LG 242
941-0313	45-095	LG 855
941-0404	45-037	LG 242
941-04136B	45-834	LG 242
941-0475	45-833	LG 855
941-0484	45-112	LG 241
941-0487	45-095	LG 855
941-0487A	45-095	LG 855
9410490	45-082	LG 854
941-0490	45-082	LG 854
941-0523	45-045	LG 249
941-0563	45-130	LG 232
941-0563	45-273	
941-0569	45-047	LG 241
941-0600	45-257	LG 245
941-0656	45-071	LG 242
941-0656A	45-071	LG 242
941-0659	45-046	LG 241
941-0660	45-072	LG 242
941-0706	45-075	LG 241
941-0919	45-259	LG 224
942-0122A	98-019	LG 516
942-0122B	98-019	LG 516
942-0171B	98-037	LG 574
942-04053	198-086	LG 565
942-04053	591-938*	LG 407
942-04053	91-938*	LG 514
942-04053A	198-086	LG 565
942-04053A	591-938*	LG 407
942-04053A	91-938*	LG 514
942-04053B	198-086	LG 565
942-04053B	591-938*	LG 407
942-04053B	91-938*	LG 514
942-04053C	198-086	LG 565
942-04053C	591-938*	LG 407
942-04053C	91-938*	LG 514
942-04053-X	591-938*	LG 407
942-04053-X	91-938*	LG 514
942-04056A	591-938*	LG 407
942-04056A	91-938*	LG 514
942-04056A	98-097	LG 514
942-04056C	591-938*	LG 407
942-04056C	91-938*	LG 514
942-04056C	98-097	LG 514
942-04062	75-600	LG 276

X

* OREGON® Gator™ replacement blade

MTD

OEM No.	OREGON	Page
942-04087	198-153	LG 520
942-04087	598-629*	LG 575
942-04087	98-629*	LG 412
942-04124-X	98-637*	LG 512
942-04125-X	598-640*	LG 405
942-04125-X	98-640*	LG 574
942-04126	98-090	LG 519
942-04154	98-094	LG 514
942-04154	98-671*	LG 514
942-04154A	98-094	LG 514
942-04154A	98-671*	LG 514
942-04217	98-095	LG 521
942-04244	96-401*	LG 404
942-04244	98-096	LG 404
942-04244A	96-401*	LG 404
942-04244A	98-096	LG 404
942-04244A-X	96-401*	LG 404
942-04244-X	96-401*	LG 404
942-04290	96-401*	LG 404
942-04290	98-096	LG 404
942-04308	598-629*	LG 575
942-04308	98-093	LG 411
942-04308	98-629*	LG 412
942-04308-X	598-629*	LG 575
942-04308-X	98-629*	LG 412
942-04312	598-629*	LG 575
942-04312	98-629*	LG 412
942-04312-X	598-629*	LG 575
942-04312-X	98-629*	LG 412
942-04338-0684	398-672*	LG 515
942-04338-0684	598-672*	LG 515
942-04338-0684	98-672*	LG 408
942-04360-0684	598-629*	LG 575
942-04360-0684	98-629*	LG 412
942-04361	96-401*	LG 404
942-04361-0684	96-401*	LG 404
942-04374	96-350*	LG 412
942-04380	598-631*	LG 390
942-04380	98-631*	LG 390
942-04380-0684	598-631*	LG 390
942-04380-0684	98-631*	LG 390
942-04410	598-629*	LG 575
942-04410	98-629*	LG 412
942-04410-0684	598-629*	LG 575
942-04410-0684	98-629*	LG 412
942-04415	596-300*	LG 519
942-04415	96-300*	LG 519
942-04415	98-071	LG 411
942-04415-X	596-300*	LG 519
942-04415-X	96-300*	LG 519
942-04416	596-351*	LG 408
942-04416	96-351*	LG 408
942-04416	98-091	LG 516
942-04416-X	596-351*	LG 408
942-04416-X	96-351*	LG 408
942-0473A	91-057	LG 409
942-0473A	96-697*	LG 517
942-0473A	98-044	LG 409
942-0486	98-486	LG 512
942-0486A	98-486	LG 512
942-0487A	98-487	LG 513
942-0493	98-493	LG 409
942-0496	98-496	LG 515
942-0496A	98-496	LG 515
942-0499	598-600*	LG 519
942-0499	98-499	LG 519
942-0499	98-600*	LG 85
942-0499A	598-600*	LG 519
942-0499A	98-499	LG 519
942-0499A	98-600*	LG 85
942-0500	98-001	LG 517
942-0503	598-600*	LG 519
942-0503	98-600*	LG 85
942-0504	98-044	LG 409
942-0504A	98-044	LG 409
942-05052	98-152	LG 514
942-05056	98-151	LG 516
942-0508	598-600*	LG 519
942-0508	98-499	LG 519
942-0508	98-600*	LG 85
942-0508A	598-600*	LG 519
942-0508A	98-499	LG 519
942-0508A	98-600*	LG 85
942-0522	98-005	LG 521
942-0537	98-537	LG 516
942-0538	598-600*	LG 519
942-0538	98-600*	LG 85
942-0542	98-057	LG 513
942-0543	98-056	LG 512
942-0610	198-058	LG 517
942-0610	598-628*	LG 517
942-0610	98-628*	LG 389
942-0610A	198-058	LG 517
942-0610A	598-628*	LG 517
942-0610A	98-628*	LG 389
942-0611	198-063	LG 513
942-0611	598-640*	LG 405
942-0611	98-640*	LG 574
942-0611A	198-063	LG 513
942-0611A	598-640*	LG 405
942-0611A	98-640*	LG 574
942-0611-X	598-640*	LG 405
942-0611-X	98-640*	LG 574
942-0612	98-061	LG 404
942-0612	98-637*	LG 512
942-0612A	98-061	LG 404
942-0612A	98-637*	LG 512
942-0612-X	98-637*	LG 512
942-0616	198-059	LG 403
942-0616	598-629*	LG 575
942-0616	98-629*	LG 412
942-0616A	198-059	LG 403
942-0616A	598-629*	LG 575
942-0616A	98-629*	LG 412
942-0616-X	598-629*	LG 575
942-0616-X	98-629*	LG 412
942-0620	98-001	LG 517
942-0621	98-002	LG 401
942-0621	98-102*	LG 410
942-0622	98-005	LG 521
942-0623	598-064*	LG 514
942-0623	98-064-1	LG 514
942-0640	98-068	LG 389
942-0642	98-050	LG 521
942-0642A	98-050	LG 521
942-0644	98-054	LG 574
942-0644	98-634*	LG 405
942-0645	98-069	LG 404
942-0645	98-670*	LG 512
942-0654	198-052	LG 389
942-0654	598-628*	LG 517
942-0654	98-628*	LG 389
942-0656	598-629*	LG 575
942-0656	98-093	LG 411
942-0656	98-629*	LG 412
942-0677	398-672*	LG 515
942-0677	598-672*	LG 515
942-0677	98-072	LG 408
942-0677	98-672*	LG 408
942-0677A	398-672*	LG 515
942-0677A	598-672*	LG 515
942-0677A	98-072	LG 408
942-0677A	98-672*	LG 408
942-0677B	398-672*	LG 515
942-0677B	598-672*	LG 515
942-0677B	98-072	LG 408
942-0677B	98-672*	LG 408
942-0677-S	398-672*	LG 515
942-0677-S	598-672*	LG 515
942-0677-S	98-672*	LG 408
942-0720	98-001	LG 517
942-0721	98-007	LG 401
942-0721	98-102*	LG 410
942-0722	98-005	LG 521
942-0738	98-065	LG 515
942-0739	92-140	LG 516
942-0740	98-066	LG 409
942-0741	198-049	LG 518
942-0741	598-631*	LG 390
942-0741	98-631*	LG 390
942-0741A	198-049	LG 518
942-0741A	598-631*	LG 390
942-0741A	98-631*	LG 390
942-0741A-X	598-631*	LG 390
942-0741A-X	98-631*	LG 390
942-0741-X	598-631*	LG 390
942-0741-X	98-631*	LG 390
942-0742	98-051	LG 521
942-0742A	98-051	LG 521
942-4360	598-629*	LG 575
942-4360	98-629*	LG 412
946-013A	60-002	LG 710
946-04007	46-337	LG 713
946-04173	60-527	LG 714
946-04173A	60-527	LG 714
946-04173B	60-527	LG 714
946-04173C	60-527	LG 714
946-04173D	60-527	LG 714
946-04173E	60-527	LG 714
946-04206A	60-528	LG 708
946-04229	46-032	LG 705
946-04229B	46-032	LG 705
946-04230	46-033	LG 714
946-04230A	46-033	LG 714
946-04236	46-034	LG 714
946-04237	46-035	LG 714
946-04256	46-036	LG 714
946-04352	60-137	LG 705
946-04352A	60-137	LG 705
946-04477	46-038	LG 715
946-04528A	46-039	LG 705
946-04528B	46-039	LG 705
946-04556	60-140	LG 715
946-04618	46-041	LG 706
946-04618A	46-041	LG 706
946-04618B	46-041	LG 706
946-04618C	46-041	LG 706
946-04640	46-042	LG 715
946-04642	46-043	LG 715
946-04642A	46-043	LG 715
946-0477A	46-317	LG 707
946-0550	46-320	LG 707
946-0552	46-310	LG 713
946-0553	46-321	LG 707
946-0554	46-316	LG 707
946-0613A	60-002	LG 710
946-0614A	60-124	LG 710
946-0616A	60-003	LG 710
946-0630A	60-021	LG 706
946-0634	60-014	LG 712
946-0671A	46-319	LG 712
946-0671A	46-323	LG 712
946-0674A	60-012-0	LG 712
946-0713A	46-004	LG 707
946-0875	60-005	LG 704
946-0876	60-007	LG 704
946-0896	46-339	LG 710
946-0897	46-044	LG 710
946-0897A	46-044	LG 710
946-0898	46-006	LG 712
946-0901	46-338	LG 704
946-0902	46-046	LG 704
946-0903	46-047	LG 704
946-0910A	46-005	LG 707
946-0912	60-045	LG 707
946-0951A	46-341	LG 711
946-0956B	46-049	LG 705
946-0956C	46-049	LG 705
946-1085A	60-039	LG 706
946-1088	60-041	LG 711
946-1100	60-042	LG 712
946-1130	46-051	LG 712
948-0108	45-277	LG 242
948-0169	45-094	LG 249
948-0227	45-088	LG 240
948-0227A	45-088	LG 240
948-0229	45-088	LG 240
948-0235	65-220	LG 340
948-0300B	65-221	LG 341
948-0323	65-224	LG 341
948-0323	80-146	LG 341
948-0324	65-226	LG 341
948-0365	65-228	LG 341
948-0855	45-091	LG 249
951-0171	07-404	LG 766
951-10298	30-166	LG 210
951-10630	33-256	LG 946
951-10639	49-326	LG 768
951-10639A	49-326	LG 768
951-10645	33-746	LG 920
951-10645A	33-746	LG 920
951-10658	31-119	LG 924
951-10955	31-120	LG 924
951-11021	49-328	LG 606
951-11021A	49-328	LG 606
951-11196	33-745	LG 920
951-11219	49-331	LG 604
951-11219A	49-331	LG 604
951-11310	31-121	LG 924
951-11332	49-329	LG 604
951-11332A	49-329	LG 604
951-11355	49-327	LG 606
951-11355A	49-327	LG 606
951-12760A	49-329	LG 604
951-12762A	49-331	LG 604
951-12788A	49-328	LG 606
951-14151	31-119	LG 924
951-14223	31-121	LG 924
951-14231	49-327	LG 606
951-3111	07-309	LG 772
954-0101A	75-148	LG 300
954-0114	75-724	LG 310
954-0125A	15-589	LG 273
954-0131	75-365	LG 862
954-0142	15-590	LG 300
954-0145	75-145	LG 300
954-0145A	75-145	LG 300
954-0151	75-004	LG 301
954-015A	75-145	LG 300
954-0178	75-179	LG 310
954-0181	15-593	LG 301
9540182	75-208	LG 277
954-0190	15-594	LG 274
954-0194	75-090	LG 301
954-0197	75-079	LG 301
954-0201	75-441	LG 334
954-0218	15-595	LG 274
954-0230	75-008	LG 301
954-0234	75-441	LG 334
954-0240	75-009	LG 301
954-0241	75-012	LG 301
954-0241A	75-012	LG 301
954-0266	75-016	LG 301
954-0266A	75-016	LG 301
954-0280	75-002	LG 301
954-0280A	75-002	LG 301
954-0281	75-281	LG 301
954-0293	75-018	LG 301
954-0325	15-601	LG 274

X

2019 OEM X-Reference

OEM No.	OREGON	Page
MTD		
954-0329A	75-029	LG 253
954-0339A	75-021	LG 274
954-0343	75-020	LG 302
954-0346	75-091	LG 302
954-0349	75-021	LG 274
954-0350	75-035	LG 302
954-0355	75-023	LG 302
954-0358	75-024	LG 302
954-0362	75-118	LG 302
954-0364	75-025	LG 253
954-0367	75-157	LG 251
954-0369	75-027	LG 302
954-0370	75-119	LG 302
954-0371	75-028	LG 302
954-0371A	75-028	LG 302
954-04001	75-673	LG 305
954-04001A	75-673	LG 305
954-04002	75-709	LG 305
954-04003A	15-602	LG 304
954-04013	15-603	LG 304
954-04014	15-604	LG 275
954-04032	75-249	LG 305
954-04032A	75-249	LG 305
954-04032B	75-249	LG 305
954-04033	75-706	LG 256
954-04041	15-013	LG 256
954-04043	75-886	LG 276
954-04043A	75-886	LG 276
954-04045	75-714	LG 276
954-04047	15-605	LG 275
954-04048	75-716	LG 276
954-04050	115-219	LG 305
954-04050A	115-219	LG 305
954-04060	75-813	LG 276
954-04060B	75-813	LG 276
954-04062	75-600	LG 276
954-04077	75-814	LG 276
954-04093	15-053	LG 305
954-04100	15-609	LG 305
954-04118	75-815	LG 277
954-04122	15-025	LG 255
954-04138A	15-112	LG 305
954-04142	15-026	LG 277
954-04201	15-052	LG 315
954-04201A	15-052	LG 315
954-04207	15-613	LG 305
954-04219	15-027	LG 306
954-04240	15-028	LG 277
954-04252	15-132	LG 306
954-04259	15-133	LG 306
954-04259A	15-133	LG 306
954-04265	15-100	LG 306
954-0427	75-168	LG 310
954-0430	75-158	LG 251
954-0430A	75-158	LG 251
954-0430B	75-158	LG 251
954-0431	75-158	LG 251
954-0433	75-029	LG 253
954-0434	75-999	LG 253
954-0438	15-616	LG 303
954-0439	75-159	LG 303
954-0440	75-161	LG 255
954-0441	75-160	LG 303
954-0443	75-109	LG 303
954-0443A	75-109	LG 303
954-0446	75-674	LG 303
954-0453	75-675	LG 303
954-0461	75-824	LG 274
954-0465	75-249	LG 305
954-0467	75-995	LG 303
954-0467A	75-995	LG 303
954-0468	75-993	LG 303
954-0472	75-361	LG 254
954-0474	75-362	LG 256
954-0475	75-363	LG 304
954-0476	75-364	LG 304
954-0483	15-619	LG 274
954-0485	75-263	LG 304
954-0486	75-264	LG 304
954-0486A	75-264	LG 304
954-0497	175-676	LG 304
954-0497	75-676	LG 304
954-0498	75-677	LG 304
954-0640	75-823	LG 254
954-0642	75-994	LG 304
954-0935	75-092	LG 304
954-3053	15-629	LG 304
954-5834	15-025	LG 255
956-0116	78-019	LG 831
956-0217	34-010	LG 831
956-0365	78-050	LG 831
956-0399	34-036	LG 821
956-04129	78-065	LG 832
956-04129B	78-065	LG 832
956-04224	78-028	LG 831
956-0437	34-014	LG 831
956-0635	78-050	LG 831
956-0980	44-369	LG 837
956-0981A	78-028	LG 831
956-0981B	78-028	LG 831
956-0982	44-365	LG 837
956-0983	44-367	LG 838
956-1202	44-103	LG 838
956-1208	78-029	LG 831
956-1227	78-066	LG 838
956-1229	78-046	LG 826
956-1229	78-098	LG 832
956-3045	34-066	LG 832
956-3054	34-010	LG 831
956-3105	78-047	LG 832
964-0221	86-025	LG 781
9664	33-019	LG 948
97584	76-019	LG 938
97585A	76-021	LG 938
983-0055	76-100	LG 939
983-0055-0637	76-100	LG 939
984-04027	73-050	LG 846
984-04027A	73-050	LG 846
984-5485	73-050	LG 846
98-499	98-067	LG 520
AF-43632	45-113	LG 242
CC-742-3033	591-635*	LG 411
CC-742-3033	91-058	LG 411
CC-742-3033	91-635*	LG 411
GW-1733439	75-148	LG 300
GW-741-0254	45-257	LG 245
GW-7420610	198-058	LG 517
GW-7420610	598-628*	LG 517
GW-7420610	98-628*	LG 389
GW-7420616	198-059	LG 403
GW-7420616	598-629*	LG 575
GW-7420616	98-629*	LG 412
GW-7540350	75-035	LG 302
GW-M6020004	45-257	LG 245
IH-384881-R94	45-000	LG 237
IH-83614-C1	91-442	LG 518
OCC-01004719	91-144	LG 454
OCC-01004719	96-677*	LG 372
OCC-01010168	592-015*	LG 515
OCC-01010168	92-015	LG 407
OCC-742-04068	596-387*	LG 407
OCC-742-04068	96-387*	LG 515
OCC-742-04068	98-087	LG 407
OCC-742-04101	591-635*	LG 411
OCC-742-04101	91-058	LG 411
OCC-742-04101	91-635*	LG 411
OCC-742-04126	98-090	LG 519
OCC-742-04244	96-401*	LG 404
OCC-742-04244	98-096	LG 404
OCC-742-0739	92-140	LG 516
OCC-742-3036	596-373*	LG 512
OCC-742-3036	91-073	LG 512
OEM-710-0890	80-743	LG 852
OEM-725-0267A	33-386	LG 942
OEM-734-3058B	72-308-1	LG 1042
OEM-738-04124	80-749	LG 853
OEM-742-0171B	98-037	LG 574
OEM-742-04308	598-629*	LG 575
OEM-742-04308	98-093	LG 411
OEM-742-04308	98-629*	LG 412
OEM-742-0473	98-044	LG 409
OEM-742-0473A	98-044	LG 409
OEM-742-0496	98-496	LG 515
OEM-742-0499	598-600*	LG 519
OEM-742-0499	98-499	LG 519
OEM-742-0499	98-600*	LG 85
OEM-742-0499A	598-600*	LG 519
OEM-742-0499A	98-499	LG 519
OEM-742-0499A	98-600*	LG 85
OEM-742-0610	198-058	LG 517
OEM-742-0610	598-628*	LG 517
OEM-742-0610	98-628*	LG 389
OEM-742-0616	198-059	LG 403
OEM-742-0616	598-629*	LG 575
OEM-742-0616	98-629*	LG 412
OEM-742-0620	98-001	LG 517
OEM-742-0621	98-002	LG 401
OEM-742-0621	98-102*	LG 410
OEM-742-0622	98-005	LG 521
OEM-742-0623	598-064*	LG 514
OEM-742-0623	98-064-1	LG 514
OEM-742-0640	98-068	LG 389
OEM-742-0642	98-050	LG 521
OEM-742-0677	398-672*	LG 515
OEM-742-0677	598-672*	LG 515
OEM-742-0677	98-072	LG 408
OEM-742-0677	98-672*	LG 408
OEM-742-0721	98-007	LG 401
OEM-742-0721	98-102*	LG 410
OEM-742-0722	98-005	LG 521
OEM-742-0738	98-065	LG 515
OEM-742-0740	98-066	LG 409
OEM-742-0741	198-049	LG 518
OEM-742-0741	598-631*	LG 390
OEM-742-0741	98-631*	LG 390
OEM-742-0742	98-051	LG 521
OEM-754-0101A	75-148	LG 300
OEM-754-0142	15-590	LG 300
OEM-754-0358	75-024	LG 302
OEM-754-0362	75-118	LG 302
OEM-754-0369	75-027	LG 302
OEM-754-04032	75-249	LG 305
OEM-754-04062	75-600	LG 276
OEM-754-0438	15-616	LG 303
OEM-754-0453	75-675	LG 303
OEM-754-0485	75-263	LG 304
OEM-781-0080	40-316	LG 586
OEM-784-5038B	73-020	LG 850
OEM-784-5576	73-054	LG 848
OEM-784-5579	73-058	LG 848
OEM-784-5579A	73-058	LG 848
OEM-784-5580	73-031	LG 850
OEM-784-5581	73-057	LG 848
OEM-784-5582A	73-055	LG 848
TC-35062	33-089	LG 946
MTS		
917-0912	82-502	LG 894
MURRAY		
0037X3	75-367	LG 306
0037X3MA	75-367	LG 306
020005SE	60-420	LG 717
020005SE	60-427	LG 717
020005SEMA	60-420	LG 717
020005SEMA	60-427	LG 717
020062	02-531	
020062MA	02-531	
020270	72-107	LG 1029
020270MA	72-107	LG 1029
020551	82-243	LG 902
020615	44-323	LG 838
020615MA	44-323	LG 838
020616	85-001	LG 908
020616MA	85-001	LG 908
020616S	85-001	LG 908
020697	02-535	
020729	42-008	LG 945
020729MA	42-008	LG 945
020930	595-601*	LG 400
020930	95-601*	LG 423
020930	97-105	LG 523
021031MA	45-104	LG 939
021409	34-023	LG 822
021409MA	34-023	LG 822
022860E701	97-110	LG 525
023211	34-043	LG 823
023211MA	34-043	LG 823
023339	34-022	LG 822
023339MA	34-022	LG 822
023342	35-010	LG 809
023343MA	35-010	LG 809
023739	44-332	LG 838
023739MA	44-332	LG 838
02377MA	33-392	LG 944
02400	595-601*	LG 400
02400	95-601*	LG 423
02400	97-105	LG 523
024039	80-014	LG 727
024039MA	80-014	LG 727
024116	595-601*	LG 400
024116	95-601*	LG 423
024116	97-105	LG 523
024273	33-015	LG 948
024273MA	33-015	LG 948
024285	33-331	LG 730
024384	82-243	LG 902
024578	85-005	
024615	45-087	LG 243
024615MA	45-087	LG 243
025116	595-601*	LG 400
025116	95-601*	LG 423
025116	97-105	LG 523
02697MA	02-535	
037X075MA	75-152	LG 308
037X12	75-112	LG 306
037X12MA	75-112	LG 306
037X22	75-022	LG 307
037X22MA	75-022	LG 307
037X26	75-026	LG 307
037X26MA	75-026	LG 307
037X38	75-038	LG 307
037X38MA	75-038	LG 307
037X40	75-040	LG 306
037X40MA	75-040	LG 306
037X43	75-005	LG 307
037X43MA	75-005	LG 307
037X45	75-045	LG 307
037X45MA	75-045	LG 307
037X57	75-057	LG 307
037X57A	75-057	LG 307
037X57MA	75-057	LG 307
037X61	75-061	LG 307
037X61AMA	75-061	LG 307
037X61MA	75-061	LG 307
037X61WMA	75-061	LG 307
037X62	75-041	LG 255
037X62A	75-041	LG 255
037X62MA	75-041	LG 255

X

* OREGON® Gator™ replacement blade

MURRAY

OEM No.	OREGON	Page
037X62WMA	75-041	LG 255
037X63	75-063	LG 307
037X63A	75-063	LG 307
037X63MA	75-063	LG 307
037X64	75-122	LG 307
037X64A	75-122	LG 307
037X64MA	75-065	LG 307
037X64MA	75-122	LG 307
037X65	75-065	LG 307
037X65MA	75-065	LG 307
037X65MA	75-122	LG 307
037X66	75-094	LG 252
037X66MA	75-094	LG 252
037X68	75-103	LG 308
037X68MA	75-103	LG 308
037X69	75-151	LG 308
037X69MA	75-151	LG 308
037X70	75-001	LG 308
037X70A	75-001	LG 308
037X70MA	75-001	LG 308
037X73MA	15-638	LG 308
037X75	75-152	LG 308
037X75A	75-152	LG 308
037X75MA	75-152	LG 308
037X75WMA	75-152	LG 308
037X80	75-042	LG 308
037X80MA	75-042	LG 308
037X81MA	15-641	LG 308
037X83MA	15-642	LG 308
037X86	75-266	LG 254
037X86A	75-266	LG 254
037X86MA	75-266	LG 254
037X87	75-209	LG 308
037X87MA	75-209	LG 308
037X88	75-135	LG 308
037X88A	75-135	LG 308
037X88HDMA	75-135	LG 308
037X88MA	75-135	LG 308
037X88WMA	75-135	LG 308
037X89	75-129	LG 255
037X89A	75-129	LG 255
037X89HDMA	75-129	LG 255
037X89MA	75-129	LG 255
037X92	75-210	LG 309
037X92MA	75-210	LG 309
037X93	75-267	LG 309
037X93MA	75-267	LG 309
037X96	75-964	LG 309
037X96MA	75-964	LG 309
037X97MA	15-644	LG 308
042174	72-106	LG 1029
042225E701	97-015	LG 527
042225E701MA	97-015	LG 527
042569	46-300	LG 717
042569MA	46-300	LG 717
042785E701	97-016	LG 524
042785E701MA	97-016	LG 524
042785E701WMA	97-016	LG 524
043827	46-315	LG 717
043827MA	46-315	LG 717
043828	46-327	LG 717
043828MA	46-327	LG 717
043881	46-328	LG 717
043881MA	46-328	LG 717
054211	65-206	LG 342
054211MA	65-206	LG 342
054212	33-032	LG 742
054212MA	33-032	LG 742
054372	595-601*	LG 400
054372	95-601*	LG 423
054372	97-105	LG 523
054390E701	595-601*	LG 400
054390E701	95-601*	LG 423
054390E701	97-105	LG 523
054390E701MA	97-105	LG 523
055452	44-340	LG 838
055700	70-301	LG 959
055700MA	70-301	LG 959
055962	82-250	LG 902
055962MA	82-250	LG 902
055969E701	97-330	LG 528
055969E701MA	97-330	LG 528
056105	45-022	LG 243
056105MA	45-022	LG 243
056217E701	97-330	LG 528
056217E701MA	97-330	LG 528
056246E701	97-330	LG 528
056246E701MA	97-330	LG 528
056246E701WMA	97-330	LG 528
056250E701	97-003	
056250E701MA	97-003	
056251E701	97-004	
056251E701	97-604*	LG 525
056251E701MA	97-004	
056251E701MA	97-604*	LG 525
056252E701	597-601*	LG 527
056252E701	97-005	LG 527
056252E701	97-601*	LG 527
056252E701MA	597-601*	LG 527
056252E701MA	97-005	LG 527
056252E701MA	97-601*	LG 527
056419	33-024	LG 945
056419MA	33-024	LG 945
056631E701	597-606*	LG 522
056631E701	97-017	LG 537
056631E701	97-606*	LG 522
056631E701MA	597-606*	LG 522
056631E701MA	97-017	LG 537
056631E701MA	97-606*	LG 522
056631E701WMA	97-017	LG 537
071132	72-114	LG 1035
071132MA	72-114	LG 1035
071133	72-113	LG 1035
071133MA	72-113	LG 1035
07113E701	97-001	LG 527
071499E701	97-001	LG 527
090118	34-004	LG 832
090242	44-356	LG 839
090242MA	44-356	LG 839
090330SEMA	35-021	LG 810
0905101E701	597-601*	LG 527
0905101E701	97-014	LG 527
0905101E701	97-601*	LG 527
090594	70-312	LG 959
090594MA	70-312	LG 959
090840	07-102	LG 774
090840MA	07-102	LG 774
090905	82-243	LG 902
091178	34-824	LG 832
091179	34-826	LG 833
091179	78-027	LG 832
091179MA	34-826	LG 833
091179MA	78-027	LG 832
091334	45-043	LG 243
091334MA	45-043	LG 243
091590	78-021	LG 832
091590MA	78-021	LG 832
091742E701	97-107	LG 524
091742E701MA	97-107	LG 524
091749E700	45-116	LG 939
091749E701	45-116	LG 939
091749E701MA	45-116	LG 939
091769	44-341	LG 839
091769MA	44-341	LG 839
091801	34-822	LG 832
091801MA	34-822	LG 832
091801MA	78-021	LG 832
091827SEC	45-116	LG 939
091827SECMA	45-116	LG 939
091846	33-396	LG 944
091846MA	33-396	LG 944
091871E701	97-109	LG 525
091871E701	97-604*	LG 525
091871E701MA	97-109	LG 525
091871E701MA	97-604*	LG 525
091871HT	97-109	LG 525
091903	82-244	LG 910
091903MA	82-244	LG 910
091921	85-012	LG 909
091922	85-008	LG 909
091922MA	85-008	LG 909
091943	44-341	LG 839
091943MA	44-341	LG 839
091951	44-340	LG 838
092002E701	97-006	LG 525
092002E701	97-604*	LG 525
092002E701MA	97-006	LG 525
092002E701MA	97-604*	LG 525
092002HT	97-006	LG 525
092003E701	597-602*	LG 524
092003E701	97-010	LG 524
092003E701MA	597-602*	LG 524
092003E701MA	97-010	LG 524
092117E701	597-606*	LG 522
092117E701	97-123	LG 537
092117E701	97-606*	LG 522
092117E701MA	597-606*	LG 522
092117E701MA	97-123	LG 537
092117E701MA	97-606*	LG 522
092127	44-342	LG 839
092127MA	44-342	LG 839
092127MA	44-356	LG 839
092265	72-094	LG 1042
092265MA	72-094	LG 1042
092317	07-309	LG 772
092317MA	07-309	LG 772
092377	33-392	LG 944
092377MA	33-392	LG 944
092418E701	97-008	LG 526
092425	44-343	LG 841
092425MA	44-343	LG 841
092466	65-208	LG 342
092466MA	65-208	LG 342
092466SEMA	65-208	LG 342
092491E701	97-020	LG 526
092543E701	597-602*	LG 524
092543E701	97-021	LG 524
092543E701MA	597-602*	LG 524
092543E701MA	97-021	LG 524
092544E701	97-024	LG 525
092544E701MA	97-024	LG 525
092556	33-383	LG 944
092556MA	33-383	LG 944
092574	82-243	LG 902
092683	72-094	LG 1042
092683MA	72-094	LG 1042
092849	85-029	LG 909
092849MA	85-029	LG 909
093064	45-023	LG 249
093064MA	45-023	LG 249
094129	85-028	LG 908
094129MA	85-028	LG 908
094136	33-085	LG 948
094136MA	33-085	LG 948
094199	44-339	LG 841
094199MA	44-339	LG 841
094199MAB	44-339	LG 841
094592	44-331	LG 841
094592MA	44-331	LG 841
094613	33-331	LG 730
094692E701	97-018	LG 523
094692E701MA	97-018	LG 523
095068MA	78-048	LG 833
095100E701	197-019	LG 539
095100E701	597-601*	LG 527
095100E701	97-601*	LG 527
095100E701MA	197-019	LG 539
095100E701MA	597-601*	LG 527
095100E701MA	97-601*	LG 527
095101E701	597-601*	LG 527
095101E701	97-020	LG 526
095101E701	97-601*	LG 527
095101E701MA	597-601*	LG 527
095101E701MA	97-020	LG 526
095101E701MA	97-601*	LG 527
095103E701	97-024	LG 525
095103E701MA	97-024	LG 525
095103E701WMA	97-024	LG 525
095104E701	597-602*	LG 524
095104E701	97-021	LG 524
095104E701MA	597-602*	LG 524
095104E701MA	97-021	LG 524
095104E701WMA	97-021	LG 524
09510E701	97-008	LG 526
09510E701	97-021	LG 524
1001200	82-245	
1001200MA	82-245	
1001709	82-028	LG 902
1001709MA	82-028	LG 902
1002004MA	33-331	LG 730
1101093	60-025-0	LG 716
1101093MA	60-025-0	LG 716
1101120E701	97-001	LG 527
1101120E701MA	97-001	LG 527
1101120E701WMA	97-001	LG 527
1101181	60-026-0	LG 716
1101181MA	60-026-0	LG 716
1101360	60-030-0	LG 716
1101360MA	60-030-0	LG 716
1101366	60-031-0	LG 716
1101366MA	60-031-0	LG 716
1101823	99-134	LG 527
1101823E701	99-134	LG 527
1101823E701MA	99-134	LG 527
121223	60-522	LG 715
121223MA	60-522	LG 715
133X4	70-307	LG 960
134X1	71-600	LG 956
138971	195-032	LG 425
138971	596-900*	LG 380
138971	96-900*	LG 526
146154	33-331	LG 730
146154	33-334	LG 730
1501217	80-015	LG 853
1501217MA	80-015	LG 853
165X2	48-001	LG 914
165X27	48-001	LG 914
165X27MA	48-001	LG 914
165X58	48-001	LG 914
165X58MA	48-001	LG 914
1731898ASM	391-610*	LG 554
1731898ASM	91-610	LG 554
1733324SM	15-014	LG 251
1736043AYP	91-616	LG 543
1736043AYP	96-398*	LG 525
1736044AYP	91-615	LG 522
1737228BM	599-132*	LG 522
1737228BM	99-132	LG 539
1737228BZYP	599-132*	LG 522
1737228BZYP	99-132	LG 539
1739889AYP	599-132*	LG 522
1740718AYP	73-059	LG 850
1740718HMA	73-059	LG 850
175441X428	60-043	LG 716
180054	195-062	LG 376
180054	596-615*	LG 529
180054	96-615*	LG 461
187256	195-072	LG 530
187256	595-605*	LG 422

X

* OREGON® Gator™ replacement blade

2019 OEM X-Reference

MURRAY

OEM No.	OREGON	Page
187256	95-605*	LG 463
1922127SM	72-106	LG 1029
193957	195-033	LG 400
193957	595-601*	LG 400
193957	95-601*	LG 423
20005	60-420	LG 717
20005	60-427	LG 717
20005MA	60-420	LG 717
20005MA	60-427	LG 717
20045E701	97-016	LG 524
20046	97-015	LG 527
20046E701	97-015	LG 527
20046HT	97-015	LG 527
20062	02-531	
20108	32-112	LG 676
20270	72-107	LG 1029
20278	72-107	LG 1029
2045HT	97-016	LG 524
2055	45-257	LG 245
20551	82-023	LG 902
20551	82-243	LG 902
20557	75-367	LG 306
20613	34-042	LG 823
20613	34-824	LG 832
20615	44-323	LG 838
20616	85-001	LG 908
20617	65-206	LG 342
20682	48-001	LG 914
20697	02-535	
20729	42-008	LG 945
20730	02-191	LG 676
20731	32-107	LG 676
20732	32-107	LG 676
20734	32-107	LG 676
20930	595-601*	LG 400
20930	95-601*	LG 423
20930	97-105	LG 523
20930E701	97-105	LG 523
20930HT	97-105	LG 523
21027	72-106	LG 1029
21031	45-104	LG 939
21064	33-386	LG 942
21064PA	33-386	LG 942
21223	60-522	LG 715
21223PA	60-522	LG 715
21261	33-330	LG 729
21261	33-331	LG 730
21261	33-337	LG 730
21409	34-023	LG 822
21409	34-826	LG 833
21409MA	34-826	LG 833
21615	75-111	LG 306
21649	75-112	LG 306
22127	72-106	LG 1029
22860	97-110	LG 525
22860E701	97-110	LG 525
22860E701MA	97-110	LG 525
22860HT	97-110	LG 525
23098	75-040	LG 306
23211	34-043	LG 823
23238	34-024	LG 822
23238	34-822	LG 832
23238	78-021	LG 832
23339	34-022	LG 822
23343	35-010	LG 809
23468	32-107	LG 676
23483	35-010	LG 809
23711	07-308	LG 772
23711	07-315	LG 772
23739	44-332	LG 838
23748	75-040	LG 306
23749	75-022	LG 307
2400	595-601*	LG 400
2400	95-601*	LG 423
2400	97-105	LG 523
24039	80-014	LG 727
24116	595-601*	LG 400
24116	95-601*	LG 423
24116	97-105	LG 523
24116E601	97-105	LG 523
24116HT	97-105	LG 523
24159	07-102	LG 774
24273	33-015	LG 948
24273MA	33-015	LG 948
24285	33-330	LG 729
24285	33-331	LG 730
24285	33-337	LG 730
24304	15-630	LG 306
24304	75-005	LG 307
24367	45-043	LG 243
24368	45-022	LG 243
24384	82-023	LG 902
24384	82-243	LG 902
24405	70-312	LG 959
24419	70-334	LG 959
24466	33-331	LG 730
24515ACC	67-002	LG 965
24515ACC	67-015	LG 965
24525ACC	67-017	LG 965
24528ACC	67-018	LG 965
24530ACC	67-005	LG 965
24532	82-244	LG 910
24578	85-005	
24615	45-087	LG 243
24615MA	45-087	LG 243
24820ACC	67-015	LG 965
25116	595-601*	LG 400
25116	95-601*	LG 423
25116	97-105	LG 523
255 423	33-116	LG 735
300841	34-820	LG 833
300920	34-826	LG 833
301171	80-015	LG 853
301171MA	80-015	LG 853
301380E701	73-059	LG 850
301380E701MA	73-059	LG 850
301380E717MA	73-059	LG 850
310326	34-820	LG 833
310326MA	34-820	LG 833
320046E701	97-015	LG 527
320046E701MA	97-015	LG 527
326108	33-116	LG 735
326108MA	33-116	LG 735
33085	33-085	LG 948
33-3865	33-331	LG 730
340696	97-015	LG 527
3748	75-040	LG 306
37X100	75-204	LG 309
37X100	75-368	LG 309
37X100MA	75-204	LG 309
37X100MA	75-368	LG 309
37X101	75-996	LG 309
37X101MA	75-996	LG 309
37X11	75-111	LG 306
37X110	75-679	LG 309
37X110MA	75-679	LG 309
37X12	75-112	LG 306
37X21	75-040	LG 306
37X22	75-022	LG 307
37X26	75-026	LG 307
37X27	75-005	LG 307
37X27MA	75-005	LG 307
37X3	75-367	LG 306
37X33	75-045	LG 307
37x35	15-634	LG 307
37x35	75-045	LG 307
37X38	75-038	LG 307
37X38MA	75-038	LG 307
37X39	75-005	LG 307
37X40	75-040	LG 306
37X43	75-005	LG 307
37X43MA	75-005	LG 307
37X45	75-045	LG 307
37X45MA	75-045	LG 307
37X57	75-057	LG 307
37X57MA	75-057	LG 307
37X61	75-061	LG 307
37X61MA	75-061	LG 307
37x62	175-041	LG 307
37X62	75-041	LG 255
37X62MA	75-041	LG 255
37X63	75-063	LG 307
37X63MA	75-063	LG 307
37X64	75-122	LG 307
37X65	75-065	LG 307
37X65	75-122	LG 307
37X65MA	75-065	LG 307
37X65MA	75-122	LG 307
37X66	75-094	LG 252
37X66MA	75-094	LG 252
37X68	75-103	LG 308
37X69	75-151	LG 308
37X69MA	75-151	LG 308
37X70	75-001	LG 308
37X70MA	75-001	LG 308
37X73	15-638	LG 308
37X75	75-152	LG 308
37X75MA	75-152	LG 308
37X80	75-042	LG 308
37X80MA	75-042	LG 308
37X81	15-641	LG 308
37X81MA	15-641	LG 308
37X83	15-642	LG 308
37X86	75-266	LG 254
37X86MA	75-266	LG 254
37X87	75-209	LG 308
37X87MA	75-209	LG 308
37X88	175-135	LG 308
37X88	75-135	LG 308
37X89	75-129	LG 255
37X89MA	75-129	LG 255
37X90	15-643	LG 308
37X92	75-210	LG 309
37X92MA	75-210	LG 309
37X93	75-267	LG 309
37X93MA	75-267	LG 309
37X96	75-964	LG 309
37X96MA	75-964	LG 309
37X97	15-644	LG 308
37X98	75-368	LG 309
3887	15-645	LG 306
3887MA	15-645	LG 306
39979	45-079	LG 249
39979MA	45-079	LG 249
400060	02-535	
402075	76-025	LG 941
402075MA	76-025	LG 941
40223	34-826	LG 833
402400	595-601*	LG 400
402400	95-601*	LG 423
402400	97-105	LG 523
403007	70-334	LG 959
403056	45-043	LG 243
407045	71-400	LG 956
407045MA	71-400	LG 956
407046	71-101	LG 956
407046MA	71-101	LG 956
407047	71-102	LG 956
407047MA	71-102	LG 956
407048	71-816	LG 956
407048MA	71-816	LG 956
407051	71-105	LG 957
420005	60-420	LG 717
420005	60-427	LG 717
420005MA	60-420	LG 717
420005MA	60-427	LG 717
420045	97-016	LG 524
420613	34-042	LG 823
420613	34-824	LG 832
4206130	34-824	LG 832
420613MA	34-042	LG 823
420613MA	34-824	LG 832
420616	85-001	LG 908
420616MA	85-001	LG 908
420729	42-008	LG 945
420729MA	42-008	LG 945
42093	514366	LG 700
42093	60-400	LG 700
42096	514366	LG 700
42096	60-400	LG 700
421064	33-386	LG 942
42106MA	33-386	LG 942
421409	34-023	LG 822
421409	34-826	LG 833
421409	78-027	LG 832
421409MA	34-826	LG 833
421409MA	78-027	LG 832
42174	72-106	LG 1029
42225	97-015	LG 527
42225E701	97-015	LG 527
42225E701MA	97-015	LG 527
42225MA	97-015	LG 527
4225E701MA	97-015	LG 527
422860	97-110	LG 525
423238	34-024	LG 822
423238	78-021	LG 832
423238MA	34-024	LG 822
423238MA	34-822	LG 832
423238MA	78-021	LG 832
424285	33-330	LG 729
424285	33-331	LG 730
424285	33-337	LG 730
424285MA	33-331	LG 730
424578	85-005	
424578MA	85-005	
42569	46-300	LG 717
42569MA	46-300	LG 717
42739	97-110	LG 525
42785E701	97-016	LG 524
42785E701MA	97-016	LG 524
42785HT	97-016	LG 524
42786	97-015	LG 527
42877	514366	LG 700
42877	60-400	LG 700
429305	595-601*	LG 400
429305	95-601*	LG 423
429305	97-105	LG 523
42930S	595-601*	LG 400
42930S	95-601*	LG 423
42930S	97-105	LG 523
430013	33-396	LG 944
430161	33-392	LG 944
430405	33-015	LG 948
430674	33-383	LG 944
43827	46-315	LG 717
43827MA	46-315	LG 717
43828	46-327	LG 717
43828MA	46-327	LG 717
43881	46-328	LG 717
442225	97-015	LG 527
442225MA	97-015	LG 527
44225	97-001	LG 527
442785	97-016	LG 524
442785MA	97-016	LG 524
454390	97-105	LG 523
4543903	595-601*	LG 400
4543903	95-601*	LG 423
4543903	97-105	LG 523
4543903MA	595-601*	LG 400

X

* OREGON® Gator™ replacement blade

MURRAY

OEM No.	OREGON	Page
4543903MA	95-601*	LG 423
4543903MA	97-105	LG 523
454390MA	595-601*	LG 400
454390MA	95-601*	LG 423
454390MA	97-105	LG 523
455962	82-250	LG 902
455962MA	82-250	LG 902
456217	97-330	LG 528
4562173	97-330	LG 528
4562173MA	97-330	LG 528
456217MA	97-330	LG 528
456251	97-004	
456251MA	97-004	
456252	597-601*	LG 527
456252	97-005	LG 527
456252	97-601*	LG 527
456252MA	597-601*	LG 527
456252MA	97-005	LG 527
456252MA	97-601*	LG 527
456631	597-606*	LG 522
456631	97-017	LG 537
456631	97-606*	LG 522
4566313	597-606*	LG 522
4566313	97-017	LG 537
4566313	97-606*	LG 522
4566313MA	597-606*	LG 522
4566313MA	97-017	LG 537
4566313MA	97-606*	LG 522
456631MA	597-606*	LG 522
456631MA	97-017	LG 537
456631MA	97-606*	LG 522
471113	97-001	LG 527
4714493MA	97-001	LG 527
471499	97-001	LG 527
4714993	97-001	LG 527
4714993MA	97-001	LG 527
471499MA	97-001	LG 527
490118	34-004	LG 832
490118MA	34-004	LG 832
491334	45-043	LG 243
491334MA	45-043	LG 243
491742	97-107	LG 524
491742MA	97-107	LG 524
491871	97-119	LG 525
491871	97-604*	LG 525
491871MA	97-119	LG 525
491871MA	97-604*	LG 525
491921	85-012	LG 909
491921MA	85-012	LG 909
491922	85-008	LG 909
491922MA	85-008	LG 909
491926	65-208	LG 342
4919263	65-208	LG 342
4919263MA	65-208	LG 342
491926MA	65-208	LG 342
492117	597-606*	LG 522
492117	97-123	LG 537
492117	97-606*	LG 522
492117MA	597-606*	LG 522
492117MA	97-123	LG 537
492117MA	97-606*	LG 522
492418	597-601*	LG 527
492418	97-008	LG 526
492418	97-601*	LG 527
492418MA	597-601*	LG 527
492418MA	97-008	LG 526
492418MA	97-601*	LG 527
492419A	97-020	LG 526
492574	82-023	LG 902
492574	82-243	LG 902
492574MA	82-023	LG 902
492574MA	82-243	LG 902
494199	44-339	LG 841
494199MA	44-339	LG 841
495100	197-019	LG 539
495100	597-601*	LG 527
495100	97-601*	LG 527
4951003	197-019	LG 539
4951003	597-601*	LG 527
4951003	97-601*	LG 527
4951003MA	197-019	LG 539
4951003MA	597-601*	LG 527
4951003MA	97-601*	LG 527
495100MA	197-019	LG 539
495100MA	597-601*	LG 527
495100MA	97-601*	LG 527
4951043	597-602*	LG 524
4951043	97-021	LG 524
4951043MA	597-602*	LG 524
4951043MA	97-021	LG 524
495104MA	597-602*	LG 524
495104MA	97-021	LG 524
49562	45-257	LG 245
49562MA	45-257	LG 245
540MA	97-107	LG 524
5412H	33-383	LG 944
54211	65-206	LG 342
54212	33-032	LG 742
54372	595-601*	LG 400
54372	95-601*	LG 423
54372	97-105	LG 523
54372E	97-105	LG 523
54372HT	97-105	LG 523
54390	595-601*	LG 400
54390	95-601*	LG 423
54390	97-105	LG 523
54390E54390E701	97-105	LG 523
54390HT	595-601*	LG 400
54390HT	95-601*	LG 423
54390HT	97-105	LG 523
54743	33-331	LG 730
5510	597-606*	LG 522
5510	97-017	LG 537
5510	97-606*	LG 522
5510MA	597-606*	LG 522
5510MA	97-017	LG 537
5510MA	97-606*	LG 522
5511	597-606*	LG 522
5511	97-123	LG 537
5511	97-606*	LG 522
5511MA	597-606*	LG 522
5511MA	97-123	LG 537
5511MA	97-606*	LG 522
5518MA	97-110	LG 525
5519	597-602*	LG 524
5519	97-021	LG 524
5519MA	597-602*	LG 524
5519MA	97-021	LG 524
5527	597-601*	LG 527
5527	97-020	LG 526
5527	97-601*	LG 527
5527MA	597-601*	LG 527
5527MA	97-020	LG 526
5527MA	97-601*	LG 527
5536	97-022	LG 524
5536MA	97-022	LG 524
5539	197-019	LG 539
5539	597-601*	LG 527
5539	97-601*	LG 527
5539MA	197-019	LG 539
5539MA	597-601*	LG 527
5539MA	97-601*	LG 527
5540	97-021	LG 524
5540	97-107	LG 524
5540MA	97-021	LG 524
5543MA	97-024	LG 525
55452	44-340	LG 838
5547	97-119	LG 525
5547	97-604*	LG 525
5547MA	97-119	LG 525
5547MA	97-604*	LG 525
5548MA	97-016	LG 524
5553	97-330	LG 528
5553MA	97-001	LG 527
5553MA	97-330	LG 528
55541	45-259	LG 224
5557	97-330	LG 528
5557MA	97-330	LG 528
5570	99-134	LG 527
55700	70-301	LG 959
5570MA	99-134	LG 527
55962	82-250	LG 902
55962E701	82-250	LG 902
55962MA	82-250	LG 902
55969	97-330	LG 528
55969E701	97-330	LG 528
55969E701MA	97-330	LG 528
55969HT	97-330	LG 528
55969MA	97-330	LG 528
56060E701	97-330	LG 528
56060HT	97-330	LG 528
56105	45-022	LG 243
56212E701	97-330	LG 528
56217E701	97-330	LG 528
56246E700	97-330	LG 528
56246E701	97-330	LG 528
56246E701MA	97-330	LG 528
56250	97-003	
56250E701	97-003	
56250E701MA	97-003	
56251	97-004	
56251E701	97-004	
56251E701MA	97-004	
56252	97-005	LG 527
56252E701	597-601*	LG 527
56252E701	97-005	LG 527
56252E701	97-601*	LG 527
56252E701MA	97-005	LG 527
56419	33-024	LG 945
56631E700	597-606*	LG 522
56631E700	97-017	LG 537
56631E700	97-606*	LG 522
56631E701	597-606*	LG 522
56631E701	97-017	LG 537
56631E701	97-606*	LG 522
56631E701MA	97-017	LG 537
57211	33-015	LG 948
579932	15-014	LG 251
579932MA	15-014	LG 251
581264	15-646	LG 306
581264MA	15-646	LG 306
585416	115-209	LG 306
585416MA	115-209	LG 306
585436	15-647	LG 306
585436MA	15-647	LG 306
642785	97-016	LG 524
642785E701	97-016	LG 524
65060	97-330	LG 528
656252-853	97-005	LG 527
656631	597-606*	LG 522
656631	97-017	LG 537
656631	97-606*	LG 522
671132	72-114	LG 1035
671133	72-113	LG 1035
671894-853	97-001	LG 527
671921E701	97-022	LG 524
672059E701	97-001	LG 527
672441	72-004	LG 1035
672441MA	72-004	LG 1035
672735	97-001	LG 527
672735E701	97-001	LG 527
672763	97-022	LG 524
672763E701	97-022	LG 524
672763E701MA	97-022	LG 524
672763E701WMA	97-022	LG 524
672835	60-032-0	LG 716
672835MA	60-032-0	LG 716
672840	60-033-0	LG 716
672840MA	60-033-0	LG 716
690020MA	44-343	LG 841
690387MA	78-055	LG 833
690411	65-204	LG 342
690411MA	65-204	LG 342
690549MA	78-049	LG 833
7101751	597-602*	LG 524
7101751	97-021	LG 524
7101751A	597-602*	LG 524
7101751A	97-021	LG 524
7101751AMA	597-602*	LG 524
7101751AMA	97-021	LG 524
710193	75-266	LG 254
710209	75-041	LG 255
710213	75-135	LG 308
710216	75-094	LG 252
710217	75-129	LG 255
7103288YP	591-611*	LG 527
7103288YP	91-611	LG 527
710341	75-209	LG 308
7104196BMYP	596-628*	LG 528
7104196BMYP	96-628*	LG 528
7104196BMYP	99-131	LG 555
710531	75-061	LG 307
710532	75-210	LG 309
710533	75-267	LG 309
71113	97-001	LG 527
71113E701	97-001	LG 527
71132	72-114	LG 1035
71133	72-113	LG 1035
71180	60-420	LG 717
71499	97-001	LG 527
71499E701	97-001	LG 527
71849E701	97-001	LG 527
721392	197-019	LG 539
721392	597-601*	LG 527
721392	97-601*	LG 527
721392A	197-019	LG 539
721392A	597-601*	LG 527
721392A	97-601*	LG 527
721392BM	197-019	LG 539
721392BM	597-601*	LG 527
721392BM	97-601*	LG 527
740194	60-006	LG 716
740194MA	60-006	LG 716
760928	15-648	LG 306
760928MA	15-648	LG 306
7701016	60-006	LG 716
7701016MA	60-006	LG 716
77010793MA	97-330	LG 528
7701100MA	33-330	LG 729
7701100MA	33-331	LG 730
774004	97-016	LG 524
774048	97-018	LG 523
774048MA	97-018	LG 523
774052	97-018	LG 523
7740523	97-018	LG 523
7740523MA	97-018	LG 523
774052MA	97-018	LG 523
774089	34-822	LG 832
774089	78-021	LG 832
774089MA	34-822	LG 832
774089MA	78-021	LG 832
774090	44-340	LG 838
774090MA	44-340	LG 838
774091	85-028	LG 908
774091MA	85-028	LG 908
776113	60-015	LG 716
776113MA	60-015	LG 716
7769203	197-019	LG 539
7769203	597-601*	LG 527

X

2019 OEM X-Reference

OEM No.	OREGON	Page
MURRAY		
7769203	97-601*	LG 527
7769205	97-018	LG 523
7771132	72-114	LG 1035
7771132MA	72-114	LG 1035
7771133	72-113	LG 1035
7771133MA	72-113	LG 1035
780061	73-059	LG 850
780061MA	73-059	LG 850
90118	34-004	LG 832
90242	44-356	LG 839
90330PA	35-021	LG 810
90330SE	35-021	LG 810
90594	70-312	LG 959
90840	07-102	LG 774
90905	82-023	LG 902
90905	82-243	LG 902
91178	34-824	LG 832
91179	34-826	LG 833
91179	78-027	LG 832
91179MA	78-027	LG 832
91291	33-331	LG 730
91334	45-043	LG 243
91334MA	45-043	LG 243
91590	78-021	LG 832
91590MA	78-021	LG 832
91742E700	97-107	LG 524
91742E701	97-107	LG 524
91742E701MA	97-107	LG 524
91742HT	97-107	LG 524
91749	45-116	LG 939
91749E701	45-116	LG 939
91769	44-341	LG 839
91801	34-822	LG 832
91801	78-021	LG 832
91827	45-116	LG 939
91846	33-396	LG 944
91846MA	33-396	LG 944
91871	97-109	LG 525
91871-853	97-109	LG 525
91871E700	97-119	LG 525
91871E700	97-604*	LG 525
91871E701	97-109	LG 525
91871E701MA	97-109	LG 525
91871HT	97-109	LG 525
91903	82-244	LG 910
91921	85-012	LG 909
91922	85-008	LG 909
91926	65-208	LG 342
91943	44-341	LG 839
91951	44-340	LG 838
92002	97-006	LG 525
92002E701	97-006	LG 525
92002E701	97-604*	LG 525
92002E701MA	97-006	LG 525
92002HT	97-006	LG 525
92003E701	597-602*	LG 524
92003E701	97-010	LG 524
92003E701MA	97-010	LG 524
92003HT	97-010	LG 524
92117	97-123	LG 537
92117E700	597-606*	LG 522
92117E700	97-123	LG 537
92117E700	97-606*	LG 522
92127	44-342	LG 839
92127	44-356	LG 839
92265	72-094	LG 1042
92265MA	72-094	LG 1042
92317	07-309	LG 772
92317MA	07-309	LG 772
92377	33-392	LG 944
92377MA	33-392	LG 944
92418	97-008	LG 526
92418	97-020	LG 526
92418-853	97-020	LG 526
92418E701	597-601*	LG 527
92418E701	97-008	LG 526
92418E701	97-601*	LG 527
92419	597-601*	LG 527
92419	97-014	LG 527
92419	97-601*	LG 527
92419E701	597-601*	LG 527
92419E701	97-014	LG 527
92419E701	97-601*	LG 527
92425	44-343	LG 841
924285	33-330	LG 729
924285	33-331	LG 730
924285	33-337	LG 730
92466	65-208	LG 342
92543E701	97-021	LG 524
92544E701	97-024	LG 525
92556	33-383	LG 944
92574	82-023	LG 902
92574	82-243	LG 902
92683	72-094	LG 1042
92683MA	72-094	LG 1042
92849	85-029	LG 909
93064	45-023	LG 249
93064MA	45-023	LG 249
94129	85-028	LG 908
94136	33-085	LG 948
94199	44-339	LG 841
94592	44-331	LG 841
94613	33-331	LG 730
94692	97-018	LG 523
94692E700	97-018	LG 523
94692E701	97-018	LG 523
94692E701MA	97-018	LG 523
95068	78-048	LG 833
95100	197-019	LG 539
95100	597-601*	LG 527
95100	97-601*	LG 527
95100E701	197-019	LG 539
95100E701	597-601*	LG 527
95100E701	97-601*	LG 527
95101-853	97-020	LG 526
95101E701	597-601*	LG 527
95101E701	97-020	LG 526
95101E701	97-601*	LG 527
95101E701MA	97-014	LG 527
95101E701MA	97-020	LG 526
95103E701	97-024	LG 525
95103E701MA	97-024	LG 525
95104E701	597-602*	LG 524
95104E701	97-021	LG 524
951103E701	97-024	LG 525
95272	78-048	LG 833
95309MA	44-331	LG 841
MT121223MA	60-522	LG 715
MT1733324SM	15-014	LG 251
MT579932	15-014	LG 251
MT579932MA	15-014	LG 251
MT585416	115-209	LG 306
MT585416MA	115-209	LG 306
MU037X87	75-209	LG 308
MU037X87MA	75-209	LG 308
MU091801MA	34-822	LG 832
MU092377	33-392	LG 944
MU092377MA	33-392	LG 944
MU092574	82-243	LG 902
MU094136	33-085	LG 948
MU094136MA	33-085	LG 948
MU1002004MA	33-331	LG 730
MU24273	33-015	LG 948
MU37X110	75-679	LG 309
MU37X110MA	75-679	LG 309
MU37X57	75-057	LG 307
MU37X65	75-065	LG 307
MU37X65	75-122	LG 307
MU37X87	75-209	LG 308
MU55962	82-250	LG 902
MU740194	60-006	LG 716
MU91436	33-085	LG 948
MU91951	44-340	LG 838
MU92265	72-094	LG 1042
MU92683	72-094	LG 1042
MU94136	33-085	LG 948
NATIONAL FARMER STORE		
754-0935	75-092	LG 304
954-0935	75-092	LG 304
NGK		
B4LM	77-301-1	LG 864
B4LM	77-313-1	LG 865
B6HS	77-321-1	LG 865
B6S	77-317-1	LG 865
B8ES	77-323-1	LG 865
BCPR5ES	77-303-1	LG 865
BM6A	77-302-1	LG 864
BM7A	77-308-1	LG 865
BM7F	77-316-1	LG 865
BMR6A	77-306-1	LG 865
BP5ES	77-310-1	LG 865
BP6ES	77-315-1	LG 865
BPM6A	77-309-1	LG 865
BPM6F	77-318-1	LG 865
BPM7A	77-300-1	LG 864
BPM7A	77-311-1	LG 865
BPMR4A	77-319-1	LG 865
BPMR4A	77-324-1	LG 865
BPMR7A	77-307-1	LG 865
BPR5ES	77-314-1	LG 865
BPR6ES	77-312-1	LG 865
BR2LM	77-305-1	LG 865
VBOF 8032 45	33-200	LG 866
WA20M-U	77-304-1	LG 865
NOMA		
1325	76-070-0	LG 726
162313	45-087	LG 243
27788	34-037	LG 821
300295	33-386	LG 942
300575	15-649	LG 309
300680	75-136	LG 309
300687	33-395	LG 943
300687	33-396	LG 944
300841	34-820	LG 833
300841	78-021	LG 832
300842	75-137	LG 309
3008689P	75-136	LG 309
300920	34-023	LG 822
301137	45-087	LG 243
301172	80-748	LG 852
301935P	75-214	LG 309
302031	33-032	LG 742
302289	15-650	LG 259
302418	73-022	LG 847
302611	72-100	
303241	15-651	LG 259
305148	15-652	LG 259
305530	06-004	LG 805
305720	33-397	LG 942
307534	82-493	LG 869
308701	15-653	LG 310
310240	82-514	LG 869
310326	34-820	LG 833
310326	78-021	LG 832
310675	82-020	LG 903
313883	76-070-0	LG 726
314108	75-138	LG 310
314120	75-934	LG 310
315542	31-907	LG 929
319005	75-208	LG 277
319596	75-289	LG 863
319596MA	75-289	LG 863
321205	75-977	LG 310
32986	75-179	LG 310
33125	15-654	LG 309
332489	04-723	
3526	15-655	LG 309
35384	45-295	LG 232
36576	72-301	LG 1037
39605	72-301	LG 1037
39831	72-304	LG 1038
39979	45-079	LG 249
40195	45-098	LG 243
41204	33-240	LG 948
41585	72-301	LG 1037
421064	33-386	LG 942
424285	33-330	LG 729
424285	33-337	LG 730
42690	07-392	LG 767
42879	07-400	LG 767
43066	75-168	LG 310
44745	33-386	LG 942
45186	15-657	LG 259
46476	34-013	LG 824
48044	75-179	LG 310
49562	45-257	LG 245
49878	15-659	LG 309
49907	33-024	LG 945
52323	33-330	LG 729
52323	33-331	LG 730
52323	33-337	LG 730
52407	45-009	LG 853
52694	34-013	LG 824
53415	514366	LG 700
53415	60-400	LG 700
53716	33-330	LG 729
53716	33-331	LG 730
53716	33-337	LG 730
53830	76-070-0	LG 726
54446	72-108	LG 1031
54765	35-021	LG 810
54766	35-021	LG 810
54837	73-025	LG 855
56992	33-024	LG 945
57214P	75-142	LG 310
57353	514366	LG 700
57353	60-400	LG 700
57556	15-660	LG 309
577023	73-025	LG 855
58170	75-143	LG 310
672440	72-005	LG 1036
779057	82-514	LG 869
779058	82-020	LG 903
779066	82-493	LG 869
782966	33-331	LG 730
9005383	76-070-0	LG 726
NOUVELLES GALERIES		
754-0145	75-145	LG 300
954-0145	75-145	LG 300
954-0145A	75-145	LG 300
954-015A	75-145	LG 300
OKLAHOMA TIRE&SUPPLY		
21615	75-111	LG 306
21615954-0935	75-111	LG 306
21649	75-112	LG 306
754-0145	75-145	LG 300
754-0151	75-004	LG 301
754-0201	75-441	LG 334
754-0234	75-441	LG 334
754-0240	75-009	LG 301
754-0935	75-092	LG 304
954-0145	75-145	LG 300
954-0145A	75-145	LG 300
954-0151	75-004	LG 301

X

* OREGON® Gator™ replacement blade

OEM No.	OREGON	Page
954-015A	75-145	LG 300
954-0201	75-441	LG 334
954-0234	75-441	LG 334
954-0240	75-009	LG 301
OLEO MAC		
33.00203	49-021	LG 629
33.00204	55-342	LG 627
350.00152	49-021	LG 629
350.00168	55-343	LG 627
950.00139	55-342	LG 627
950.0016	49-835	LG 611
950.00160	49-835	LG 611
950.00161	49-835	LG 611
OMC		
474627	49-834	LG 611
475152	49-812	LG 612
580148	33-601	LG 789
ONAN		
122-0185	83-300	LG 819
122-0406	83-283	LG 818
122-0406	83-403	LG 818
122-0469	83-028	LG 817
122-0645	83-283	LG 818
122-0645	83-403	LG 818
122-0737	69-282	LG 817
122-0737	83-282	LG 817
122-0737	83-402	LG 817
122-645	83-283	LG 818
122-645	83-403	LG 818
140-1188	30-082	LG 205
140-1216	30-093	LG 206
140-1216	30-812	LG 206
140-1228	30-430	LG 211
140-1228	30-630	LG 197
140-1228	30-846	LG 211
140-1496	30-953	LG 211
140-1891	30-432	
140-2522	30-430	LG 211
140-2522	30-846	LG 211
140-2628	30-430	LG 211
140-2628	30-846	LG 211
140-2628-01	30-430	LG 211
146-0180	49-201	LG 608
149-2206	07-103	LG 775
149-2206-01	07-103	LG 775
191-0933	33-720	LG 920
191-1567	33-721	LG 920
191-1642-04	33-732	LG 920
1911748	33-411	LG 732
191-1748	33-411	LG 732
191-1804-04	33-732	LG 920
191-1808-04	33-732	LG 920
191-1808-06	33-732	LG 920
191-1949-04	33-732	LG 920
191-1949-06	33-732	LG 920
191-1949-07	33-732	LG 920
191-1949-08	33-732	LG 920
1912106	33-411	LG 732
191-2106	33-411	LG 732
1912208	33-411	LG 732
191-2208	33-411	LG 732
191-2227	33-411	LG 732
1912277	33-411	LG 732
191-2277	33-411	LG 732
378-0385	33-389	LG 945
ORGILL BROS.		
754-0266	75-016	LG 301
954-0266	75-016	LG 301
954-0266A	75-016	LG 301

OEM No.	OREGON	Page
OUR OWN HARDWARE		
754-0145	75-145	LG 300
754-0151	75-004	LG 301
754-0178	75-179	LG 310
754-0201	75-441	LG 334
754-0230	75-008	LG 301
754-0234	75-441	LG 334
754-0240	75-009	LG 301
754-0241	75-012	LG 301
754-0266	75-016	LG 301
754-0293	75-018	LG 301
754-0935	75-092	LG 304
954-0145	75-145	LG 300
954-0145A	75-145	LG 300
954-0151	75-004	LG 301
954-015A	75-145	LG 300
954-0178	75-179	LG 310
954-0201	75-441	LG 334
954-0230	75-008	LG 301
954-0234	75-441	LG 334
954-0240	75-009	LG 301
954-0241	75-012	LG 301
954-0241A	75-012	LG 301
954-0266	75-016	LG 301
954-0266A	75-016	LG 301
954-0293	75-018	LG 301
954-0935	75-092	LG 304
PARKER		
TE0230US250AA	27-503	LG 724
TF0240LS080AAFB	27-502	LG 725
PARKWAY SUPPLY CO.		
754-0151	75-004	LG 301
754-0935	75-092	LG 304
954-0151	75-004	LG 301
PARTNER		
506 03 30-31	75-711	LG 310
506 07 05-03	75-724	LG 310
506 07 05-06	75-713	LG 310
506 22 42-01	30-066	
506 22 42-1	30-066	
506 22 42-1	30-836	LG 680
506 29 67-02	75-712	LG 310
506033031	75-711	LG 310
506070503	75-724	LG 310
506070504	15-661	LG 310
506070506	75-713	LG 310
506070507	15-662	LG 310
506224201	30-066	
506-23-15-02	30-149	LG 211
506231801	30-149	LG 211
506231802	30-149	LG 211
506-23-18-02	30-149	LG 211
506-23-18F	30-149	LG 211
506276741	75-711	LG 310
506296702	75-712	LG 310
506372706	75-713	LG 310
531031497	30-066	
544908402	75-712	LG 310
PENNEY'S		
1060	75-120	LG 300
1089	75-120	LG 300
21615	75-111	LG 306
21649	75-112	LG 306
23749	75-022	LG 307
754-0145	75-145	LG 300
754-0151	75-004	LG 301
754-0178	75-179	LG 310
754-0194	75-090	LG 301
754-0201	75-441	LG 334
754-0230	75-008	LG 301
754-0234	75-441	LG 334

OEM No.	OREGON	Page
754-0266	75-016	LG 301
754-0935	75-092	LG 304
954-0145	75-145	LG 300
954-0145A	75-145	LG 300
954-0151	75-004	LG 301
954-015A	75-145	LG 300
954-0178	75-179	LG 310
954-0194	75-090	LG 301
954-0201	75-441	LG 334
954-0230	75-008	LG 301
954-0234	75-441	LG 334
954-0266	75-016	LG 301
954-0266A	75-016	LG 301
954-0935	75-092	LG 304
PEP BOYS		
754-0935	75-092	LG 304
PHELON		
06230	33-606	LG 789
06240-00-F	33-363	LG 787
071130	33-008	LG 789
07130	33-008	LG 789
6230	33-606	LG 789
71130	33-008	LG 789
7130	33-008	LG 789
FG06225	33-008	LG 789
FG1316	33-008	LG 789
FG-6240	33-363	LG 787
PHOENIX		
F3008	34-001	LG 821
F3011	34-002	LG 821
F3616	34-006	LG 821
F4414	34-009	LG 821
F4812	34-012	LG 821
F5212	34-015	LG 821
F5216	34-017	LG 821
F6412	34-019	LG 821
F6416	34-020	LG 821
FI275-075	34-024	LG 822
FI325-075	78-034	LG 822
FI400-075	34-024	LG 822
FI400-100	78-037	LG 822
PI275-150	34-028	LG 821
S810	34-810	LG 725
V39AB	34-030	LG 821
V40AO	34-031	LG 821
V48A	34-034	LG 821
V64B	34-038	LG 821
VI375-063	34-043	LG 823
VI400-063	78-040	LG 823
VI450-063	78-000	LG 823
W1375-1-0	78-101	LG 249
W1375-1-2	78-103	LG 823
W1500-1-0	78-100	LG 249
W1500-1-2	78-102	LG 823
PIX		
P-00030779	15-581	LG 273
P-01005378	15-583	LG 273
P-041-0219-00	15-232	LG 266
P-041-0236-00	15-233	LG 266
P-041-1420-00	15-234	LG 267
P-041-1470-00	15-235	LG 267
P-041-1490-00	15-236	LG 267
P-041-1560-00	15-237	LG 267
P-041-1890-00	15-238	LG 267
P-041-2375-00	15-239	LG 267
P-041-2525-00	15-240	LG 267
P-041-5048-00	15-241	LG 267
P-041-5200-00	15-242	LG 267
P-041-6027-00	15-243	LG 267
P-041-6400-00	15-244	LG 267
P-049028	15-151	LG 285

OEM No.	OREGON	Page
P-07200026	15-152	LG 264
P-07200027	15-153	LG 286
P-07200028	15-154	LG 286
P-07200030	15-155	LG 264
P-07200032	15-156	LG 286
P-07200039	15-157	LG 286
P-07200116	15-158	LG 286
P-07200433	15-159	LG 286
P-07200435	15-160	LG 253
P-07200504	15-566	LG 299
P-07225500	15-567	LG 299
P-07234600	15-164	LG 286
P-07234900	15-165	LG 286
P-07235100	15-167	LG 286
P-07239200	15-169	LG 266
P-07239300	15-170	LG 266
P-07239400	15-171	LG 286
P-07240700	15-173	LG 287
P-07241300	15-174	LG 287
P-07242000	15-179	LG 287
P-07242300	15-180	LG 287
P-07242800	15-181	LG 266
P-07243600	15-568	LG 299
P-100023	15-951	LG 297
P-100024	15-952	LG 297
P-101141	15-954	LG 297
P-101228	15-955	LG 297
P-1016203	15-321	LG 272
P-101736	15-956	LG 297
P-101916701	15-322	LG 272
P-101996	15-957	LG 297
P-102549	15-958	LG 297
P-102655X	15-688	LG 315
P-102742	15-788	LG 320
P-1035598	15-398	LG 282
P-1036906	15-399	LG 282
P-1046397	15-789	LG 320
P-1046398	15-790	LG 320
P-1048152	15-791	LG 320
P-106125	15-792	LG 320
P-106339	15-959	LG 297
P-10676	15-847	LG 325
P-106863X	15-691	LG 260
P-10859	15-848	LG 325
P-10864	15-849	LG 325
P-1106774	15-794	LG 320
P-1106892	15-795	LG 320
P-111924X	15-693	LG 311
P-11305	15-369	LG 278
P-114202	15-797	LG 320
P-11466	15-850	LG 325
P-1185651	15-829	LG 324
P-12033	15-370	LG 278
P-12172	15-371	LG 278
P-124279	15-372	LG 278
P-124293X	15-695	LG 260
P-128110	15-269	LG 270
P-1300A	15-373	LG 278
P-1323735	15-401	LG 279
P-13453	15-851	LG 325
P-141416	15-700	LG 259
P-14153G1	15-428	LG 283
P-14398	15-739	LG 316
P-1469	15-852	LG 325
P-14799	15-740	LG 316
P-14800	15-741	LG 317
P-14911-97010	15-516	LG 298
P-15184	15-853	LG 325
P-1520873	15-434	LG 283
P-15415A	15-854	LG 325
P-15481-97010	15-517	LG 298
P-15624	15-855	LG 258
P-1594	15-798	LG 320
P-16099	15-945	LG 325
P-16548G1	15-429	LG 283

X

2019 OEM X-Reference

OEM No.	OREGON	Page
PIX		
P-165555	15-704	LG 311
P-165631	15-705	LG 315
P-1657044	15-724	LG 316
P-1670835	15-729	LG 316
P-167133	15-512	LG 298
P-167148	15-513	LG 298
P-167149	15-514	LG 298
P-167163	15-515	LG 298
P-1684	15-374	LG 278
P-169178	15-708	LG 312
P-169778	15-223	LG 259
P-170140	15-711	LG 259
P-1703466	15-731	LG 316
P-1703836	15-732	LG 316
P-17053	15-742	LG 317
P-1714	15-375	LG 278
P-1716854	15-733	LG 316
P-1718017	15-734	LG 316
P-1722039	15-735	LG 316
P-1744706	15-833	LG 324
P-1755565	15-836	LG 324
P-1764007	15-837	LG 324
P-1764009	15-838	LG 324
P-179092	15-712	LG 260
P-18186	15-856	LG 325
P-182212	15-224	LG 260
P-1830258	15-839	LG 324
P-183688	15-225	LG 260
P-18440	15-858	LG 325
P-185476	15-226	LG 260
P-1860	15-376	LG 278
P-18990	15-860	LG 325
P-194346	15-227	LG 260
P-196853	15-228	LG 260
P-20256	15-366	LG 277
P-203590	15-331	LG 272
P-203591	15-333	LG 272
P-203593	15-335	LG 272
P-203594	15-337	LG 272
P-203597	15-339	LG 272
P-205505	15-961	LG 297
P-205513	15-962	LG 297
P-205514	15-963	LG 297
P-20644	15-861	LG 325
P-20824	15-435	LG 283
P-21063	15-436	LG 283
P-210890	15-799	LG 320
P-21261	15-437	LG 283
P-21510W	15-863	LG 326
P-21684	15-438	LG 283
P-2188128	15-247	LG 268
P-22062	15-440	LG 283
P-23033	15-864	LG 326
P-2308052	15-248	LG 268
P-23416	15-744	LG 317
P-23560	15-865	LG 326
P-23933	15-867	LG 326
P-23943	15-868	LG 326
P-23990	15-869	LG 326
P-24102	15-870	LG 326
P-24304	15-630	LG 306
P-24497	15-746	LG 317
P-24618	15-748	LG 317
P-2474A	15-871	LG 326
P-26305	15-749	LG 317
P-26354	15-872	LG 326
P-26414G01	15-430	LG 283
P-26840W	15-873	LG 326
P-27077G02	15-431	LG 283
P-2720815	15-249	LG 268
P-2720948	15-250	LG 268
P-27346	15-750	LG 317
P-27347	15-751	LG 317
P-27652	15-874	LG 326
P-27875	15-875	LG 326
P-27920	15-938	LG 326
P-28167	15-876	LG 326
P-28334	15-753	LG 317
P-28975	15-877	LG 326
P-29010	15-878	LG 327
P-29101	15-756	LG 317
P-29229	15-879	LG 327
P-29519	15-881	LG 327
P-29523	15-882	LG 327
P-29641	15-760	LG 317
P-29907	15-761	LG 317
P-300575	15-649	LG 309
P-302289	15-650	LG 259
P-303241	15-651	LG 259
P-30435	15-883	LG 327
P-305148	15-652	LG 259
P-308701	15-653	LG 310
P-31615	15-884	LG 327
P-31666	15-885	LG 327
P-31720	15-886	LG 327
P-31748	15-887	LG 327
P-3211077	15-663	LG 310
P-323344	15-404	LG 279
P-323734	15-405	LG 279
P-32650	15-888	LG 327
P-32855	15-889	LG 327
P-32906	15-890	LG 327
P-32970	15-891	LG 327
P-33050	15-892	LG 327
P-33056	15-893	LG 328
P-33105	15-894	LG 328
P-33125	15-654	LG 309
P-33710	15-895	LG 328
P-34517	15-896	LG 328
P-3492	15-897	LG 328
P-35162	15-898	LG 328
P-35252	15-899	LG 328
P-3526	15-655	LG 309
P-35433	15-900	LG 328
P-3546	15-901	LG 328
P-35543	15-902	LG 328
P-35583	15-947	LG 328
P-35710	15-762	LG 317
P-36365	15-903	LG 328
P-36371	15-904	LG 328
P-36496	15-905	LG 328
P-3652	15-906	LG 328
P-36585	15-763	LG 318
P-37051	15-907	LG 329
P-37x35	15-634	LG 307
P-37X73	15-638	LG 308
P-37X81	15-641	LG 308
P-37X83	15-642	LG 308
P-37X90	15-643	LG 308
P-37X97	15-644	LG 308
P-38136	15-253	LG 267
P-381904	15-443	LG 284
P-382025	15-444	LG 284
P-382037	15-445	LG 284
P-382049	15-446	LG 284
P-38275	15-254	LG 267
P-382777	15-449	LG 284
P-382800	15-450	LG 285
P-382836	15-451	LG 285
P-38330	15-255	LG 267
P-38331	15-256	LG 267
P-38362	15-257	LG 267
P-38363	15-258	LG 267
P-38385	15-259	LG 267
P-38462	15-260	LG 268
P-38528	15-261	LG 268
P-3887	15-645	LG 306
P-401603	15-229	LG 260
P-403024	15-408	LG 279
P-403025	15-409	LG 280
P-403088	15-410	LG 280
P-403105	15-411	LG 280
P-408010	15-230	LG 260
P-41545	15-184	LG 285
P-41599	15-185	LG 285
P-419271	15-231	LG 260
P-423018	15-389	LG 278
P-42735	15-764	LG 318
P-42813	15-765	LG 318
P-43844	15-766	LG 318
P-44637	15-767	LG 318
P-448990	15-800	LG 320
P-45186	15-657	LG 259
P-471410	15-801	LG 321
P-48019	15-262	LG 268
P-48084	15-674	LG 312
P-481498	15-677	LG 313
P-481499	15-678	LG 313
P-481980	15-679	LG 313
P-48207	15-680	LG 312
P-482137	15-681	LG 313
P-48238A	15-264	LG 268
P-48280A	15-265	LG 268
P-483053	15-390	LG 278
P-48376	15-266	LG 268
P-48553	15-682	LG 313
P-48607	15-683	LG 313
P-48854	15-684	LG 313
P-49029	15-220	LG 285
P-4927	15-943	LG 329
P-49270	15-187	LG 285
P-49878	15-659	LG 309
P-50020136	15-295	LG 271
P-5023256	15-768	LG 318
P-506033033	15-477	LG 288
P-506070504	15-661	LG 310
P-506070507	15-662	LG 310
P-5082	15-908	LG 329
P-51213	15-188	LG 285
P-51344	15-911	LG 329
P-514291	15-802	LG 321
P-515382M1	15-578	LG 300
P-515383M1	15-579	LG 300
P-523175	15-412	LG 280
P-523349	15-394	LG 278
P-523366	15-395	LG 278
P-53418	15-913	LG 329
P-539110411	15-472	LG 259
P-539110832	15-473	LG 288
P-539112529	15-474	LG 288
P-539660	15-803	LG 321
P-543028	15-413	LG 280
P-543523	15-415	LG 280
P-543548	15-416	LG 280
P-543749	15-417	LG 280
P-557660	15-804	LG 321
P-570240	15-805	LG 321
P-5711	15-914	LG 329
P-57556	15-660	LG 309
P-581264	15-646	LG 306
P-585436	15-647	LG 306
P-5959	15-577	LG 300
P-603193	15-418	LG 280
P-603295	15-419	LG 280
P-603576	15-420	LG 280
P-603582	15-421	LG 280
P-6111	15-386	LG 278
P-6231	15-842	LG 325
P-62421-62310	15-519	LG 298
P-62465	15-769	LG 318
P-62828	15-715	LG 315
P-633162	15-424	LG 280
P-633853	15-425	LG 280
P-653332	15-426	LG 280
P-653333	15-427	LG 282
P-65482	15-296	LG 270
P-66101-25080	15-522	LG 298
P-66474	15-297	LG 270
P-66503	15-916	LG 329
P-66552	15-299	LG 271
P-671390	15-807	LG 321
P-68093	15-570	LG 299
P-6814	15-918	LG 329
P-696220	15-809	LG 321
P-70003	15-920	LG 329
P-700151	15-571	LG 299
P-70050-94495	15-525	LG 298
P-70050-94497	15-526	LG 298
P-70102	15-921	LG 329
P-70132	15-922	LG 329
P-70197	15-939	LG 329
P-702553	15-559	LG 299
P-70341	15-940	LG 329
P-705010	15-572	LG 299
P-705361	15-561	LG 299
P-705375	15-573	LG 299
P-705376	15-574	LG 299
P-705377	15-575	LG 299
P-705378	15-576	LG 299
P-70580	15-923	LG 330
P-70581	15-924	LG 330
P-70713-34770	15-529	LG 298
P-70983	15-926	LG 330
P-7102	15-580	LG 300
P-710532	15-685	LG 315
P-710533	15-686	LG 315
P-71429	15-928	LG 330
P-71460012	15-948	LG 253
P-71460013	15-949	LG 255
P-71506	15-929	LG 330
P-71526	15-930	LG 330
P-71579	15-931	LG 330
P-71616	15-932	LG 330
P-71838	15-933	LG 330
P-71879	15-934	LG 330
P-72023	15-221	LG 265
P-72052	15-190	LG 265
P-72054G01	15-432	LG 283
P-72081	15-192	LG 265
P-72098	15-193	LG 266
P-72130	15-194	LG 265
P-72131	15-195	LG 265
P-72231	15-200	LG 285
P-72238	15-201	LG 285
P-72242	15-202	LG 285
P-72250	15-203	LG 286
P-72258	15-222	LG 285
P-72260	15-205	LG 266
P-7230	15-843	LG 325
P-7234	15-844	LG 325
P-72345	15-208	LG 266
P-7235	15-845	LG 325
P-7235500	15-210	LG 266
P-72363	15-211	LG 266
P-72382	15-213	LG 286
P-7241500	15-215	LG 287
P-7241700	15-216	LG 266
P-7241800	15-217	LG 287
P-72818	15-935	LG 330
P-73263	15-936	LG 330
P-741330	15-810	LG 321
P-74977	15-716	LG 315
P-760928	15-648	LG 306
P-76505-34710	15-535	LG 298
P-76516-61510	15-536	LG 298
P-76529-34710	15-538	LG 298
P-76539-34710	15-539	LG 298
P-76553-34710	15-541	LG 298
P-7725	15-388	LG 278

X

* OREGON® Gator™ replacement blade

OEM No.	OREGON	Page
PIX		
P-78030N	15-267	LG 268
P-78031N	15-268	LG 268
P-79181	15-771	LG 318
P-79776	15-773	LG 318
P-79779	15-774	LG 318
P-79781	15-776	LG 318
P-822390	15-812	LG 321
P-824110	15-813	LG 321
P-826420	15-814	LG 321
P-83101670	15-553	LG 299
P-83120	15-313	LG 271
P-83121	15-314	LG 271
P-83136	15-315	LG 271
P-8411	15-815	LG 321
P-84302	15-317	LG 271
P-84303	15-318	LG 271
P-850053	15-717	LG 260
P-86326	15-316	LG 271
P-88074	15-718	LG 259
P-90880	15-302	LG 271
P-9180R	15-719	LG 312
P-9240	15-218	LG 285
P-925588	15-820	LG 321
P-933884	15-821	LG 321
P-93991	15-303	LG 271
P-94144	15-304	LG 271
P-94897	15-305	LG 271
P-94898	15-306	LG 271
P-94899	15-307	LG 271
P-94900	15-308	LG 271
P-94900007850	15-780	LG 320
P-94900007851	15-781	LG 320
P-94900007891	15-782	LG 320
P-94900007900A	15-783	LG 320
P-94900007901A	15-784	LG 320
P-94900007915	15-785	LG 320
P-94900007920	15-786	LG 320
P-9540125	15-589	LG 273
P-9540142	15-590	LG 300
P-9540181	15-593	LG 301
P-9540190	15-594	LG 274
P-9540218	15-595	LG 274
P-9540264	15-598	LG 301
P-9540325	15-601	LG 274
P-95404003A	15-602	LG 304
P-95404013	15-603	LG 304
P-95404014	15-604	LG 275
P-95404047	15-605	LG 275
P-95404055	15-606	LG 275
P-95404100	15-609	LG 305
P-95404207	15-613	LG 305
P-9540438	15-616	LG 303
P-9540483	15-619	LG 274
P-9540641	15-623	LG 274
P-9543001	15-588	LG 275
P-9543004	15-625	LG 275
P-9543045	15-627	LG 275
P-9543048	15-628	LG 275
P-9543053	15-629	LG 304
P-96814	15-309	LG 271
P-97315	15-310	LG 271
P-97346C158	15-367	LG 277
P-983764	15-824	LG 321
P-983780	15-825	LG 321
P-9907B130	15-368	LG 277
P-993904	15-826	LG 321
P-994627	15-827	LG 322
P-994647	15-828	LG 322
P-AM102190	15-511	LG 292
P-C23359	15-320	LG 272
P-D18004	15-452	LG 287
P-D18005	15-453	LG 287
P-D18006	15-454	LG 287
P-D18007	15-455	LG 287
P-D18087	15-457	LG 287
P-D18088	15-458	LG 287
P-D18361	15-459	LG 288
P-D28030	15-460	LG 288
P-D28031	15-461	LG 288
P-D28125	15-462	LG 288
P-D28241	15-463	LG 288
P-D3389	15-350	LG 272
P-D3644	15-351	LG 272
P-D3645	15-352	LG 272
P-D3664	15-353	LG 272
P-D3671	15-354	LG 272
P-D3724	15-355	LG 272
P-D3727W	15-356	LG 272
P-D3728	15-357	LG 272
P-D3733	15-358	LG 272
P-D3754	15-359	LG 272
P-D3764W	15-360	LG 272
P-D3769	15-361	LG 272
P-D3777W	15-363	LG 272
P-D3778	15-364	LG 272
P-GDU10025	15-464	LG 288
P-GDU10228	15-465	LG 288
P-GY20572	15-483	LG 293
P-K5645-34710	15-544	LG 298
P-K5651-34710	15-545	LG 298
P-K5651-34711	15-546	LG 298
P-K5671-34710	15-547	LG 298
P-K5677-34710	15-548	LG 298
P-K5700-34710	15-549	LG 299
P-K5763-34710	15-550	LG 299
P-M117608	15-485	LG 293
P-M119872	15-486	LG 293
P-M125383	15-487	LG 293
P-M136927	15-488	LG 293
P-M141627	15-490	LG 294
P-M142997	15-491	LG 294
P-M143888	15-492	LG 294
P-M147278	15-493	LG 294
P-M148556	15-494	LG 294
P-M154295	15-497	LG 294
P-M154960	15-498	LG 294
P-M155343	15-499	LG 294
P-M155368	15-500	LG 294
P-M44121	15-501	LG 294
P-PL1443	15-270	LG 270
P-PL4511	15-271	LG 270
P-PL4513	15-272	LG 270
P-PL4732	15-274	LG 270
P-PL4733	15-275	LG 270
P-PL4734	15-276	LG 270
P-PL4739	15-277	LG 270
P-PL4740	15-278	LG 270
P-PL4811	15-279	LG 270
P-PL4813	15-280	LG 270
P-PL5039	15-281	LG 270
P-PL6011	15-282	LG 270
P-PL6062	15-283	LG 270
P-PL7332	15-286	LG 270
P-PL7436	15-287	LG 270
P-PL8519	15-288	LG 270
P-PLO543	15-289	LG 269
P-PLO648	15-290	LG 269
P-PLO661	15-291	LG 269
P-PLO848	15-292	LG 270
P-PLO861	15-293	LG 270
P-PM221	15-294	LG 270
P-PP12001	15-664	LG 311
P-PP12002	15-665	LG 311
P-PP12012	15-667	LG 311
P-PP13006	15-668	LG 311
P-PP13007	15-669	LG 311
P-PP13008	15-670	LG 311
P-PP13010	15-672	LG 311
P-PP13011	15-673	LG 311
P-SM31150	15-737	LG 316
P-TCU16092	15-507	LG 296
P-TCU16841	15-508	LG 296
P-TCU18847	15-466	LG 288
P-TCU18849	15-467	LG 288
POULAN		
141114	195-021	LG 468
141114	595-602*	LG 403
141114	95-602*	LG 403
15385	56-004	LG 686
187254	195-072	LG 530
187254	595-605*	LG 422
187254	95-605*	LG 463
187255	595-605*	LG 422
187255	95-082	LG 372
187255	95-605*	LG 463
19156	49-017	LG 760
204340218	595-024*	LG 465
204340218	95-044	LG 465
20913	55-226	LG 212
23064	56-004	LG 686
23364	07-201	LG 779
23369	55-515	LG 211
23369	55-612	LG 211
23791	55-613	LG 211
24548	55-226	LG 212
34032	07-207	LG 779
37793	55-515	LG 211
505220913	55-226	LG 212
507123791	55-613	LG 211
507-432582	55-342	LG 627
520-023369	55-612	LG 211
521981601	596-900*	LG 380
521981601	96-900*	LG 526
530010897	07-066	LG 778
530-010897	07-066	LG 778
530014362	07-066	LG 778
530-014362	07-066	LG 778
530014815	07-066	LG 778
530-014815	07-066	LG 778
530015385	56-004	LG 686
530019156	49-017	LG 760
530023064	56-004	LG 686
530023364	07-066	LG 778
530023364	07-201	LG 779
530-023364	07-066	LG 778
530-023364	07-201	LG 779
530023369	55-515	LG 211
530023369	55-612	LG 211
530-023369	55-515	LG 211
530-023369	55-612	LG 211
530023791	55-613	LG 211
530-023791	55-613	LG 211
530024548	55-226	LG 212
530-024548	55-226	LG 212
530-024841	07-207	LG 779
530-026048	55-822	LG 1027
530034032	07-207	LG 779
530035008	49-021	LG 629
530035027	55-343	LG 627
530035032	49-816	LG 612
530035049	49-816	LG 612
530035092	49-816	LG 612
530035093	49-812	LG 612
530035106	49-021	LG 629
530035112	49-835	LG 611
530035113	49-835	LG 611
530035127	49-832	LG 611
530-035128	49-806	LG 611
530035144	49-816	LG 612
530035145	49-812	LG 612
530-035146	49-812	LG 612
530035161	49-816	LG 612
530035173	49-812	LG 612
530035185	49-816	LG 612
530035186	49-812	LG 612
530035189	55-342	LG 627
530035199	49-816	LG 612
530035260	49-816	LG 612
530-036575	30-964	LG 212
530037793	55-515	LG 211
530-037793	55-515	LG 211
530038874	49-444	LG 630
530-038874	49-444	LG 630
530047004	07-066	LG 778
530-047004	07-066	LG 778
530-047213	49-443	LG 630
530049383	30-965	LG 212
530-049383	30-965	LG 212
530071835	49-443	LG 630
530-091481	07-206	LG 776
530091878	07-207	LG 779
530095643	07-066	LG 778
530095646	07-066	LG 778
530-095646	07-066	LG 778
530095649	07-066	LG 778
530-095649	07-066	LG 778
530-19156	49-017	LG 760
530-35008	49-021	LG 629
530-35027	55-343	LG 627
530-35032	49-816	LG 612
530-35049	49-816	LG 612
530-35092	49-816	LG 612
530-35093	49-812	LG 612
530-35106	49-021	LG 629
530-35112	49-835	LG 611
530-35127	49-832	LG 611
530-35144	49-816	LG 612
530-35145	49-812	LG 612
530-35161	49-816	LG 612
530-35173	49-812	LG 612
530-35185	49-816	LG 612
530-35186	49-812	LG 612
530-35189	55-342	LG 627
530-35199	49-816	LG 612
530-35213	49-835	LG 611
530-35260	49-816	LG 612
530-37793	55-515	LG 211
531301252	195-021	LG 468
531301252	595-602*	LG 403
531301252	95-602*	LG 403
531307212	595-024*	LG 465
531307212	95-044	LG 465
531307213	195-067	LG 380
531307213	595-621*	LG 467
531307213	95-621*	LG 402
531307214	195-021	LG 468
531307214	595-602*	LG 403
531307214	95-602*	LG 403
531307220	195-003	LG 400
531307220	595-601*	LG 400
531307220	95-601*	LG 423
531307221	195-033	LG 400
531307221	595-601*	LG 400
531307221	95-601*	LG 423
531307223	195-005	LG 373
531307223	596-900*	LG 380
531307223	96-900*	LG 526
531307224	195-032	LG 425
531307224	596-900*	LG 380
531307224	96-900*	LG 526
531307235	595-621*	LG 467
531307235	95-071	LG 402
531307235	95-621*	LG 402
531307236	195-021	LG 468
531307236	595-602*	LG 403
531307236	95-602*	LG 403
531307237	195-021	LG 468
531307237	595-602*	LG 403

X

2019 OEM X-Reference

OEM No.	OREGON	Page
POULAN		
531307237	95-602*	LG 403
532106635	95-014	LG 374
532106635	95-607*	LG 397
532-109081	33-331	LG 730
532-109946X	33-331	LG 730
532121263	95-031	LG 377
532-121687	82-678	LG 904
532121798	95-027	LG 398
532123791	55-613	LG 211
532126338	95-034	LG 377
532127841	595-613*	LG 463
532127841	95-036	LG 463
532127841	95-613*	LG 463
532127842	195-033	LG 400
532127842	595-601*	LG 400
532127842	95-601*	LG 423
532134148	195-003	LG 400
532134148	595-601*	LG 400
532134148	95-601*	LG 423
532134149	195-005	LG 373
532134149	596-900*	LG 380
532134149	96-900*	LG 526
532134768	195-021	LG 468
532134768	595-602*	LG 403
532134768	95-602*	LG 403
532137380	595-609*	LG 461
532137380	95-018	LG 399
532137380	95-609*	LG 376
532-138406	33-331	LG 730
532138496	595-613*	LG 463
532138496	95-026	LG 376
532138496	95-613*	LG 463
532138497	195-033	LG 400
532138497	595-601*	LG 400
532138497	95-601*	LG 423
532138498	195-032	LG 425
532138498	596-900*	LG 380
532138498	96-900*	LG 526
532138971	195-032	LG 425
532138971	596-900*	LG 380
532138971	96-900*	LG 526
532139775	195-019	LG 466
532139775	596-900*	LG 380
532139775	96-900*	LG 526
532141114	195-021	LG 468
532141114	595-602*	LG 403
532141114	95-602*	LG 403
532143978	95-031	LG 377
532145106	595-024*	LG 465
532145106	95-051	LG 465
532152202	195-021	LG 468
532152202	595-602*	LG 403
532152202	95-602*	LG 403
532173921	596-615*	LG 529
532173921	95-068	LG 376
532173921	96-615*	LG 461
532175064	595-621*	LG 467
532175064	95-057	LG 380
532175064	95-621*	LG 402
532180054	195-062	LG 376
532180054	596-615*	LG 529
532180054	96-615*	LG 461
532187255	595-605*	LG 422
532187255	95-082	LG 372
532187255	95-605*	LG 463
532187256	195-072	LG 530
532187256	595-605*	LG 422
532187256	95-605*	LG 463
532189028	195-067	LG 380
532189028	595-621*	LG 467
532189028	95-621*	LG 402
532192682	595-602*	LG 403
532192682	95-073	LG 533
532192682	95-602*	LG 403
532193957	195-003	LG 400
532193957	595-601*	LG 400
532193957	95-601*	LG 423
53234148	195-003	LG 400
53234148	595-601*	LG 400
53234148	95-601*	LG 423
532403107	596-370*	LG 427
532403107	95-074	LG 533
532403107	96-370*	LG 533
532405380	195-070	LG 469
532405380	596-370*	LG 427
532405380	96-370*	LG 533
532406707	595-602*	LG 403
532406707	95-023	LG 380
532406707	95-602*	LG 403
532406712	595-621*	LG 467
532406712	95-057	LG 380
532406712	95-621*	LG 402
532406713	595-602*	LG 403
532406713	95-023	LG 380
532406713	95-602*	LG 403
532419273	595-807*	LG 382
532419274	595-807*	LG 382
532420463	95-076	LG 404
532420463	95-615*	LG 426
532752233	595-024*	LG 465
532752233	95-044	LG 465
532850972	595-024*	LG 465
532850972	95-024	LG 465
532850973	595-602*	LG 403
532850973	95-023	LG 380
532850973	95-602*	LG 403
539107519	195-062	LG 376
539107519	596-615*	LG 529
539107519	96-615*	LG 461
539110324	195-003	LG 400
539110324	595-601*	LG 400
539110324	95-601*	LG 423
539111878	195-067	LG 380
539111878	595-621*	LG 467
539111878	95-621*	LG 402
539112053	195-072	LG 530
539112053	595-605*	LG 422
539112053	95-605*	LG 463
56401	595-602*	LG 403
56401	95-023	LG 380
56401	95-602*	LG 403
574292401	195-072	LG 530
574292401	595-605*	LG 422
574292401	95-605*	LG 463
575157101	195-021	LG 468
575157101	595-602*	LG 403
575157101	95-602*	LG 403
575937801	596-370*	LG 427
575937801	95-074	LG 533
575937801	96-370*	LG 533
575937901	195-070	LG 469
575937901	596-370*	LG 427
575937901	96-370*	LG 533
575938201	195-062	LG 376
575938201	596-615*	LG 529
575938201	96-615*	LG 461
575938301	195-062	LG 376
575938301	596-615*	LG 529
575938301	96-615*	LG 461
575938401	195-072	LG 530
575938401	595-605*	LG 422
575938401	95-605*	LG 463
575938501	595-605*	LG 422
575938501	95-082	LG 372
575938501	95-605*	LG 463
580244001	95-615*	LG 426
580258101	595-621*	LG 467
580258101	95-621*	LG 402
580258102	595-621*	LG 467
580258102	95-621*	LG 402
581116301	195-003	LG 400
581116301	595-601*	LG 400
581116301	95-601*	LG 423
581694101	595-621*	LG 467
581694101	95-057	LG 380
581694101	95-621*	LG 402
582923101	595-605*	LG 422
582923101	95-082	LG 372
582923101	95-605*	LG 463
582928101	595-807*	LG 382
582931401	595-602*	LG 403
582931401	95-073	LG 533
582931401	95-602*	LG 403
585587701	95-615*	LG 426
69334	595-602*	LG 403
69334	95-023	LG 380
69334	95-602*	LG 403
777187256	195-072	LG 530
777187256	595-605*	LG 422
777187256	95-605*	LG 463
777405380	195-070	LG 469
777405380	596-370*	LG 427
777405380	96-370*	LG 533
777419274	595-807*	LG 382
8021	595-602*	LG 403
8021	95-023	LG 380
8021	95-602*	LG 403
917532406707	595-602*	LG 403
917532406707	95-073	LG 533
917532406707	95-602*	LG 403
952014129	55-226	LG 212
952-014129	55-226	LG 212
PP12001	15-664	LG 311
PP12002	15-665	LG 311
PP12012	15-667	LG 311
PP13006	15-668	LG 311
PP13007	15-669	LG 311
PP13008	15-670	LG 311
PP13010	15-672	LG 311
PP13011	15-673	LG 311
PP22055	595-024*	LG 465
PP22055	95-044	LG 465
PP23020	195-067	LG 380
PP23020	595-621*	LG 467
PP23020	95-621*	LG 402
PP24004	195-032	LG 425
PP24004	596-900*	LG 380
PP24004	96-900*	LG 526
POWER EQUIPMENT DIST		
754-0145	75-145	LG 300
754-0230	75-008	LG 301
954-0145	75-145	LG 300
954-0145A	75-145	LG 300
954-015A	75-145	LG 300
954-0230	75-008	LG 301
POWER KING		
03-2018	33-386	LG 942
03-2028	33-389	LG 945
03-7101	33-384	LG 947
23-7602	07-315	LG 772
POWER TRIM		
307	78-676	LG 839
310	40-131	LG 586
334	78-675	LG 839
334-1	78-677	LG 839
339	75-010	LG 311
339-1	15-002	LG 311
4L280	75-010	LG 311
PRO		
7520070	60-408	LG 700
7523008	44-310	LG 840
PRO HARDWARE		
754-0145	75-145	LG 300
754-0151	75-004	LG 301
754-0178	75-179	LG 310
754-0201	75-441	LG 334
754-0234	75-441	LG 334
754-0240	75-009	LG 301
754-0241	75-012	LG 301
754-0935	75-092	LG 304
954-0145	75-145	LG 300
954-0145A	75-145	LG 300
954-0151	75-004	LG 301
954-015A	75-145	LG 300
954-0178	75-179	LG 310
954-0201	75-441	LG 334
954-0234	75-441	LG 334
954-0240	75-009	LG 301
954-0241	75-012	LG 301
954-0241A	75-012	LG 301
954-0935	75-092	LG 304
PROFESSIONAL HARDWARE		
754-0145	75-145	LG 300
754-0178	75-179	LG 310
754-0935	75-092	LG 304
954-0145	75-145	LG 300
954-0145A	75-145	LG 300
954-015A	75-145	LG 300
954-0178	75-179	LG 310
954-0935	75-092	LG 304
PROGRESSIVE TURF		
522360	94-121	LG 534
522364	94-122	LG 534
522372	91-593	LG 534
522376	94-123	LG 534
526601	94-124	LG 534
526615	91-594	LG 534
QUALITY FARM & FLEET		
754-0145	75-145	LG 300
954-0145	75-145	LG 300
954-0145A	75-145	LG 300
954-015A	75-145	LG 300
QUINSTAR		
330576	83-010	LG 819
330576	83-400	LG 819
RANSOMES INC.		
2720646	72-741	LG 1046
2722228	72-739	LG 1046
38264	72-741	LG 1046
RAUB		
754-0151	75-004	LG 301
954-0151	75-004	LG 301
RED MAX		
110051113	55-252	LG 1019
1100-51113	55-252	LG 1019
1100-51114	55-252	LG 1019
110375220	43-685	LG 936
113000602	55-252	LG 1019
1130-00602	55-252	LG 1019
1272-06020	49-812	LG 612
1272-06030	49-816	LG 612
1491-61510	49-027	LG 769
1491-81510	49-027	LG 769
180064	40-140	LG 584
1850-85300	07-219	LG 779

X

* OREGON® Gator™ replacement blade

OEM No.	OREGON	Page
RED MAX		
26367-15110	40-140	LG 584
2670-06020	49-812	LG 612
2670-06030	49-816	LG 612
3039-06030	49-816	LG 612
3302-85400	07-214	LG 779
3306-81380	55-342	LG 627
3310-81310	49-021	LG 629
3310-81380	55-342	LG 627
3359-06010	49-835	LG 611
3496-06020	49-835	LG 611
401282320	30-955	LG 212
505175301	40-140	LG 584
521452001	40-140	LG 584
544271501	30-068	LG 212
544271601	30-955	LG 212
550082171	30-067	LG 212
5500-82171	30-067	LG 212
5500-85400	07-219	LG 779
550-82171	30-067	LG 212
613223	40-140	LG 584
6367-15110	40-140	LG 584
EXZ2460S	40-140	LG 584
HE2200LDC	40-140	LG 584
HE2600	40-140	LG 584
HE261	40-140	LG 584
HEZ2460F	40-140	LG 584
HEZ2460S	40-140	LG 584
HEZ2601S	40-140	LG 584
HEZ2610F	40-140	LG 584
HEZ2650F	40-140	LG 584
HEZ3060E	40-140	LG 584
HEZ3060S	40-140	LG 584
T401282310	30-068	LG 212
T4012-82310	30-068	LG 212
T4012-82311	30-068	LG 212
T401282320	30-955	LG 212
T4012-82320	30-955	LG 212
T4012-82321	30-955	LG 212
REDHAWK		
148-005	396-716*	LG 451
148-005	596-310*	LG 447
148-005	96-310*	LG 444
148-005	99-127	LG 375
ROBIN AMERICA/SUBARU		
106-32704-07	30-713	LG 221
106-62516-00	49-226	LG 596
1082	55-231	LG 212
226-62341-00	49-227	LG 596
227-36002-03	30-968	LG 222
227-50211-00	31-054	LG 924
227-50211-01	31-054	LG 924
227-50405-00	31-054	LG 924
227-50811-10	31-054	LG 924
227-62333-00	49-228	LG 596
252-32614-08	30-162	LG 222
263-32610-01	30-717	LG 221
274-32603-07	30-162	LG 222
282-50211-00	31-054	LG 924
A6000-260-0000	43-685	LG 936
EY-20	33-525	LG 786
EY2353261008	30-924	LG 186
RA-263-32610-01	30-717	LG 221
RONCONI		
754-0935	75-092	LG 304
954-0935	75-092	LG 304
ROPER		
016-176	34-031	LG 821
016-371	34-033	LG 821
101273M	35-021	LG 810
101477	82-677	LG 903
101477X	82-677	LG 903
101677X	55-803	LG 1022
102655X	15-688	LG 315
103R	33-331	LG 730
105307X	34-036	LG 821
105313X	78-043	LG 824
105455X	72-306	LG 1038
106863X	15-691	LG 260
107707X	72-456	LG 1036
108597X	15-691	LG 260
109081X	33-334	LG 730
109946	33-334	LG 730
110484	34-034	LG 821
111924X	15-693	LG 311
121687	82-678	LG 904
124293X	15-695	LG 260
128774	82-220	LG 871
130794	82-225	LG 871
137646	85-017	LG 907
141416	15-700	LG 259
144200	75-099	LG 262
146154	33-331	LG 730
146154	33-334	LG 730
1553H	45-206	LG 231
1554H	45-205	LG 228
1649J	34-036	LG 821
165555	15-704	LG 311
165631	15-705	LG 315
169178	15-708	LG 312
170140	15-711	LG 259
173437	78-054	LG 824
173901	78-053	LG 824
175820	78-052	LG 824
179092	15-712	LG 260
187284	78-051	LG 824
2008J	33-331	LG 730
2504J	49-800	LG 610
2887J	07-102	LG 774
3366R	45-073	LG 227
3483	35-010	LG 809
3621R	33-386	LG 942
371979	07-102	LG 774
372644	35-006	LG 808
42174	72-106	LG 1029
4371J	34-015	LG 821
4406R	33-386	LG 942
4702H	34-003	LG 821
4827H	34-030	LG 821
4933H	34-005	LG 821
4933H	34-006	LG 821
5276R	83-300	LG 819
53018	34-030	LG 821
532141416	15-700	LG 259
532165631	15-705	LG 315
532170140	15-711	LG 259
5375	78-043	LG 824
6109J	34-011	LG 821
61620	34-015	LG 821
62828	15-715	LG 315
66048	34-003	LG 821
67400	34-008	LG 821
677A14	82-677	LG 903
677A181	82-677	LG 903
677A880	33-331	LG 730
702245	72-456	LG 1036
71275	82-677	LG 903
72215	78-043	LG 824
73558	82-677	LG 903
74977	15-716	LG 315
75672	34-031	LG 821
75673	34-002	LG 821
76557	34-002	LG 821
76980	34-006	LG 821
7754R	33-331	LG 730
7838R	45-109	LG 939
78744	34-005	LG 821
83059	49-170	LG 758
850053	15-717	LG 260
8514R	45-109	LG 939
88074	15-718	LG 259
8846R	34-034	LG 821
917532062828	15-715	LG 315
917532141416	15-700	LG 259
917532165631	15-705	LG 315
917532170140	15-711	LG 259
9178	34-002	LG 821
9180R	15-719	LG 312
9492H	34-017	LG 821
9576H	49-802	LG 610
STD365402	33-386	LG 942
RYAN		
14060	49-816	LG 612
14061	49-812	LG 612
153066	55-803	LG 1022
2701410	89-001	LG 590
522361	89-001	LG 590
610317	05-072	LG 1023
610675	49-170	LG 758
613223	40-143	LG 587
682030	55-820	LG 935
683856	55-800	LG 934
RYOBI		
147496	55-812	LG 1022
153592	55-184	LG 1019
153619	55-179	LG 1023
180814	55-812	LG 1022
181468	55-182	LG 1023
682039	07-017	LG 1022
683974	49-088-0	LG 631
683974	55-138	LG 768
791-613223	40-143	LG 587
791-613223B	40-143	LG 587
DP153592	55-184	LG 1019
SABRE		
883S-25R	58-040	LG 961
H1-N7256-NS	58-110	LG 960
H1-N7257-NS	58-114	LG 960
H1-N7262-NS	58-112	LG 960
SACHS-DOLMAR		
010.151.020.0	49-812	LG 612
021.151.180.0	55-342	LG 627
021.151.540.0	49-812	LG 612
108.151.190.0	49-021	LG 629
118.151.210.0	49-833	LG 611
118.151.520.0	49-807	LG 611
119.151.540.7	49-835	LG 611
144.150.030.0	55-333	LG 633
144.150.360.0	49-021	LG 629
375.151.060.0	49-026	LG 769
A6000-260-0000	43-685	LG 936
SANDVIK		
50RG-56D	58-110	LG 960
50RG-57D	58-114	LG 960
50RG-62D	58-112	LG 960
63A-66D	58-242	LG 958
63AG-25R	58-040	LG 961
SCAG		
0402-09	04-125	LG 694
04063-07	02-535	
4001-41	04-125	LG 694
421239	76-143	LG 698
43001-02	82-305	LG 908
43022	45-188	LG 230
43025	48-006	LG 694
43037-01	09-804	LG 233
43038	48-141	LG 249
43044	78-101	LG 249
43278	48-141	LG 249
45006	48-202	LG 694
46020	82-325	LG 903
461663	82-325	LG 903
46400	82-325	LG 903
46513	48-148	LG 695
46631	82-325	LG 903
48005-04	45-002	LG 237
48005-05	45-002	LG 237
48006-01	72-795	LG 1044
48006-03	71-274	LG 956
48006-1	72-795	LG 1044
48017	33-386	LG 942
48017-01	33-386	LG 942
48017-02	33-386	LG 942
48017-02	42-008	LG 945
48017-03	33-386	LG 942
48017-04	33-386	LG 942
48018	33-350	LG 949
48056	07-400	LG 767
48057-02	07-101	LG 775
48068	34-007	LG 826
48083	75-036	LG 297
48084	15-674	LG 312
48087	75-154	LG 312
48088	75-155	LG 312
48089	75-055	LG 255
48091	60-123	LG 717
48100-01	45-127	LG 244
48100-02	48-320	LG 238
48100-20	48-320	LG 238
48101	45-220	LG 232
48101-01	45-220	LG 232
48101-02	45-220	LG 232
48102	45-257	LG 245
481022	45-257	LG 245
481024	49-314	LG 910
481071	60-380	LG 717
48108	396-726*	LG 391
48108	596-344*	LG 495
48108	91-622	LG 536
48108	96-344*	LG 536
481091	60-123	LG 717
48110	396-735*	LG 452
48110	596-308*	LG 548
48110	91-621	LG 563
48110	96-308*	LG 456
48111	396-727*	LG 467
48111	596-347*	LG 448
48111	91-626	LG 552
48111	96-347*	LG 387
48112	396-764*	LG 537
48112	596-341*	LG 482
48112	91-627	LG 482
48112	96-341*	LG 446
48118	45-104	LG 939
48127	78-642	LG 841
48141	78-642	LG 841
481460	75-215	LG 313
481461	75-268	LG 313
481498	15-677	LG 313
481499	15-678	LG 313
481529	27-502	LG 725
481557	75-270	LG 257
481558	75-216	LG 257
481632	72-758	LG 1042
481635	33-002	LG 946
481637	33-015	LG 948
481657	45-002	LG 237
481662	60-028	LG 718
48168	78-642	LG 841
4817-02	42-008	LG 945

X

* OREGON® Gator™ replacement blade

2019 OEM X-Reference

OEM No.	OREGON	Page
SCAG		
481706	396-735*	LG 452
481706	596-308*	LG 548
481706	91-621	LG 563
481706	96-308*	LG 456
481707	396-726*	LG 391
481707	596-344*	LG 495
481707	91-622	LG 536
481707	96-344*	LG 536
481708	396-727*	LG 467
481708	596-347*	LG 448
481708	91-626	LG 552
481708	96-347*	LG 387
481709	396-764*	LG 537
481709	596-341*	LG 482
481709	91-627	LG 482
481709	96-341*	LG 446
481710	396-735*	LG 452
481710	596-308*	LG 548
481710	91-621	LG 563
481710	96-308*	LG 456
481711	396-726*	LG 391
481711	596-344*	LG 495
481711	91-623	LG 485
481711	96-344*	LG 536
481712	396-727*	LG 467
481712	596-347*	LG 448
481712	91-628	LG 387
481712	96-347*	LG 387
481749	75-715	LG 313
481769	45-053	LG 230
481770	45-038	LG 224
481774	72-741	LG 1046
48181	78-121	LG 827
48184	396-735*	LG 452
48184	596-308*	LG 548
48184	91-621	LG 563
48184	96-308*	LG 456
48185	396-726*	LG 391
48185	596-344*	LG 495
48185	91-623	LG 485
48185	96-344*	LG 536
481858	45-031	LG 232
481895	45-002	LG 237
481896	72-795	LG 1044
48193-01	45-031	LG 232
48198	78-300	LG 833
481980	15-679	LG 313
48199	78-673	LG 839
48200	78-680	LG 840
48202	75-260	LG 312
48202A	75-260	LG 312
48203	75-043	LG 312
48204	75-054	LG 312
48207	15-680	LG 312
482090	75-625	LG 313
48210	48-145	LG 698
482137	15-681	LG 313
482139	75-681	LG 313
48224	45-242	LG 243
48226	48-148	LG 695
482281	75-681	LG 313
482306	78-007	LG 833
482461	396-735*	LG 452
482461	596-308*	LG 548
482461	91-621	LG 563
482461	96-308*	LG 456
482462	396-726*	LG 391
482462	596-344*	LG 495
482462	91-622	LG 536
482462	96-344*	LG 536
482503	72-735	LG 1045
482504	72-736	LG 1045
482529	75-682	LG 258
482530	75-629	LG 314
482531	75-632	LG 314
482639	27-502	LG 725
48265	75-047	LG 313
482652	75-631	LG 314
48269	78-300	LG 833
482708	91-628	LG 387
482716	75-632	LG 314
482744	78-642	LG 841
482787	396-727*	LG 467
482787	596-347*	LG 448
482787	91-638	LG 426
482787	96-347*	LG 387
482788	396-764*	LG 537
482788	596-341*	LG 482
482788	91-627	LG 482
482788	96-341*	LG 446
48285	75-048	LG 313
48286	75-058	LG 255
482876	15-046	LG 314
482877	396-735*	LG 452
482877	596-308*	LG 548
482877	91-621	LG 563
482877	96-308*	LG 456
482878	396-726*	LG 391
482878	596-344*	LG 495
482878	91-637	LG 507
482878	96-344*	LG 536
482879	396-727*	LG 467
482879	596-347*	LG 448
482879	91-622	LG 536
482879	91-638	LG 426
482879	96-347*	LG 387
482881	396-727*	LG 467
482881	596-347*	LG 448
482881	91-638	LG 426
482881	96-347*	LG 387
482882	396-764*	LG 537
482882	596-341*	LG 482
482882	91-627	LG 482
482882	96-341*	LG 446
482959	91-636	LG 535
482959	96-661*	LG 535
482961	396-726*	LG 391
482961	596-344*	LG 495
482961	96-344*	LG 536
483001	75-634	LG 314
483002	75-635	LG 314
48304	396-727*	LG 467
48304	596-347*	LG 448
48304	91-638	LG 426
48304	96-347*	LG 387
48307	72-741	LG 1046
48307	72-795	LG 1044
48307-01	72-795	LG 1044
48307-02	72-741	LG 1046
483084	75-637	LG 253
483086	15-045	LG 314
483086	75-045	LG 307
48309	07-392	LG 767
48311	07-315	LG 772
483157	75-637	LG 253
483165	15-047	
483166	15-045	LG 314
483166	75-045	LG 307
483172	75-641	LG 314
483190	27-504	LG 725
483211	78-300	LG 833
483213	78-007	LG 833
483215	78-300	LG 833
483239	75-642	LG 314
483241	75-644	LG 314
483242	75-645	LG 314
483243	75-646	LG 257
483317	91-622	LG 536
483325	75-648	LG 257
483326	75-649	LG 258
483518	75-058	LG 255
483741	15-134	LG 314
483913	33-024	LG 945
484088	15-135	LG 314
484159	15-136	LG 314
48442	45-295	LG 232
48462-01	83-012	LG 819
48464	45-302	LG 804
48473	78-007	LG 833
48553	15-682	LG 313
48568	07-403	LG 766
48587	75-052	LG 313
48607	15-683	LG 313
48609	33-024	LG 945
48617	33-024	LG 945
48668	45-002	LG 237
48717	33-019	LG 948
48757	83-011	LG 819
48758	83-011	LG 819
48760	75-663	LG 279
48780	60-125	LG 718
48787	33-410	LG 947
48787-01	33-410	LG 947
48798	33-399	LG 944
48799	75-904	LG 313
48828	46-416	LG 718
48854	15-684	LG 313
48912	75-044	LG 313
48924	78-642	LG 841
48926	78-003	LG 839
48946	60-027	LG 718
48996	75-370	LG 257
5022061	75-631	LG 314
783326	75-649	LG 258
9664	33-019	LG 948
A48083	75-036	LG 297
A48108	91-637	LG 507
A48110	91-620	LG 470
A48110	91-621	LG 563
A48110	92-145	LG 535
A-48110	91-620	LG 470
A481108	91-622	LG 536
A48111	91-628	LG 387
A48184	91-620	LG 470
A48184	91-621	LG 563
A48184	92-145	LG 535
A-48184HL	91-621	LG 563
A48185	91-622	LG 536
A48185	91-637	LG 507
A48286	75-058	LG 255
A48304	91-628	LG 387
HG44147	45-130	LG 232
SCOTTS		
495100	197-019	LG 539
56631E701	597-606*	LG 522
56631E701	97-017	LG 537
56631E701	97-606*	LG 522
710532	15-685	LG 315
710533	15-686	LG 315
774048	97-018	LG 523
94692	97-018	LG 523
95100	197-019	LG 539
M115496	396-706*	LG 538
M115496	596-306*	LG 487
M115496	91-380	LG 538
M115496	96-306*	LG 538
M127466	396-725*	LG 538
M127466	91-448	LG 482
M127466	96-394*	LG 538
M135589	91-447	LG 538
M135589	96-618*	LG 483
M139802	91-449	LG 492
M139802	96-340*	LG 539
SEARS		
037X22MA	75-022	LG 307
037X38MA	75-038	LG 307
037X40MA	75-040	LG 306
037X43MA	75-005	LG 307
037X44MA	75-038	LG 307
037X45MA	75-045	LG 307
037X57MA	75-057	LG 307
037X61MA	75-061	LG 307
037X61MA	75-111	LG 306
037X62MA	75-041	LG 255
037X65MA	75-065	LG 307
07133022000P	98-093	LG 411
07133032000P	198-153	LG 520
07133034000P	95-602*	LG 403
07133049000P	98-629*	LG 412
07133058000P	95-621*	LG 402
07133256000P	195-021	LG 468
100669K	95-015	LG 400
10096	30-301	LG 217
10096	30-801	LG 217
10096	69-034	LG 217
101477	82-677	LG 903
101477X	82-677	LG 903
101766X	72-437	LG 1030
102080X	82-678	LG 904
102655X	15-688	LG 315
103R	33-331	LG 730
105455X	72-306	LG 1038
105891	82-678	LG 904
105891X	82-678	LG 904
106085X	75-107	LG 254
106634	95-015	LG 400
106634X	95-015	LG 400
106635X	95-014	LG 374
106863X	15-691	LG 260
107707X	72-456	LG 1036
108597X	15-691	LG 260
109081X	33-331	LG 730
109946X	33-331	LG 730
110785X	95-034	LG 377
110883	75-108	LG 289
110883X	75-108	LG 289
111924X	15-693	LG 311
114884	95-044	LG 465
114886	95-023	LG 380
12000029	02-020	
120262X	95-034	LG 377
121263X	95-031	LG 377
121676X	82-678	LG 904
121687X	82-678	LG 904
121798X	95-027	LG 398
123431X	95-031	LG 377
123796X	75-111	LG 306
124293X	15-695	LG 260
126338X	95-034	LG 377
126847	45-128	LG 228
126847X	45-128	LG 228
126957X	70-334	LG 959
127841	95-036	LG 463
128774	82-220	LG 871
129277	95-051	LG 465
130652	95-006	LG 397
130652MS	95-006	LG 397
130794	82-225	LG 871
130861	46-325	LG 701
130969	75-106	LG 261
131264	75-097	LG 289
131322	95-047	LG 378
131694	95-051	LG 465
133346	95-051	LG 465
134871	95-051	LG 465
136969	95-036	LG 463
137380	95-018	LG 399
137646	85-017	LG 907

X

* OREGON® Gator™ replacement blade

SEARS

OEM No.	OREGON	Page
138406	33-331	LG 730
138496	95-036	LG 463
138969	95-036	LG 463
140026	98-007	LG 401
140403	33-099	LG 946
141114	95-023	LG 380
141416	15-700	LG 259
143969	95-034	LG 377
143978	95-031	LG 377
143978X	95-031	LG 377
144200	75-026	LG 307
144200	75-099	LG 262
145106	95-044	LG 465
145106	95-051	LG 465
145708	95-045	LG 374
145708	95-052	LG 398
146154	33-331	LG 730
146154	33-334	LG 730
146749	95-044	LG 465
152443	95-045	LG 374
152443	95-052	LG 398
1553H	45-206	LG 231
1554H	45-205	LG 228
156468	95-018	LG 399
15703	95-045	LG 374
15703	95-052	LG 398
157033	95-052	LG 398
157101	95-023	LG 380
158913	33-397	LG 942
159705	95-045	LG 374
159705	95-052	LG 398
1629J	75-115	LG 260
163819	95-045	LG 374
163819	95-052	LG 398
165555	15-704	LG 311
165631	15-705	LG 315
165833	95-057	LG 380
169178	15-708	LG 312
170140	15-711	LG 259
170698	95-045	LG 374
170698	95-052	LG 398
173437	78-054	LG 824
173901	78-053	LG 824
175064	95-057	LG 380
175820	78-052	LG 824
176084	95-045	LG 374
176084	95-052	LG 398
179092	15-712	LG 260
180767	72-014	LG 1031
187284	78-051	LG 824
189028	95-057	LG 380
191723	75-810	LG 257
192682	95-023	LG 380
196857	15-020	LG 291
197253	15-021	LG 256
2008J	33-331	LG 730
21615	75-111	LG 306
2228M1	02-535	
2295R	75-179	LG 310
23748	75-040	LG 306
23749	75-022	LG 307
24691	95-015	LG 400
25034	95-014	LG 374
25034R	95-014	LG 374
25036	95-015	LG 400
25036R	95-015	LG 400
25322	95-011	
25322R	95-011	
255W109	72-108	LG 1031
255W347	72-437	LG 1030
25744	95-041	LG 401
2887J	07-102	LG 774
30727	30-070	LG 216
31700	30-205	LG 219
32972	30-091	LG 217
33203	95-024	LG 465
33204	95-024	LG 465
33214	95-023	LG 380
33219	95-023	LG 380
33255	95-044	LG 465
335256	95-023	LG 380
3366R	45-073	LG 227
3483	35-010	LG 809
35066	30-301	LG 217
3570R	80-036	LG 727
3588R	70-334	LG 959
365410	42-008	LG 945
36693	30-091	LG 217
371979	07-102	LG 774
372644	35-006	LG 808
37X11	75-111	LG 306
37X21	75-040	LG 306
37X22	75-022	LG 307
37X26	75-026	LG 307
37X37	75-038	LG 307
37X38	75-038	LG 307
37X40	75-040	LG 306
37X43	75-005	LG 307
37X45	75-045	LG 307
37X57	75-057	LG 307
37X61	75-061	LG 307
37X62	75-041	LG 255
37X65	75-065	LG 307
405143	15-022	LG 292
406712	95-057	LG 380
406713	95-023	LG 380
42174	72-106	LG 1029
429636	15-023	LG 256
43066	75-168	LG 310
43066MA	75-168	LG 310
4384H	75-168	LG 310
4552H	80-036	LG 727
48044	75-179	LG 310
48044MA	75-179	LG 310
490-110-C119	98-093	LG 411
4919H	02-531	
4933H	34-005	LG 821
4949H	02-195	LG 676
4950H	02-182	LG 676
5091H	75-208	LG 277
532105455	72-306	LG 1038
532106634	95-015	LG 400
532121263	95-031	LG 377
532-121263	95-015	LG 400
532-121263	95-031	LG 377
532130652	95-049	LG 459
532141416	15-700	LG 259
532143978	95-031	LG 377
532165631	15-705	LG 315
532170140	15-711	LG 259
532196857	15-020	LG 291
532197253	15-021	LG 256
532405143	15-022	LG 292
532406713	95-023	LG 380
532429636	15-023	LG 256
532752233	95-044	LG 465
532850973	95-023	LG 380
56400	95-024	LG 465
56400R	95-024	LG 465
56401	95-023	LG 380
59038	71-600	LG 956
5913H	42-008	LG 945
618-0240	82-515	LG 896
618-0240A	82-515	LG 896
618-0241	82-516	LG 896
618-0430	82-515	LG 896
618-0430A	82-515	LG 896
618-0430B	82-515	LG 896
618-0431	82-516	LG 896
618-04822	82-058	LG 898
618-04822A	82-058	LG 898
618-04889	82-058	LG 898
618-04889A	82-058	LG 898
618-04950	82-058	LG 898
618-0671	82-519	LG 897
618-0671B	82-519	LG 897
62828	15-715	LG 315
63087A	30-301	LG 217
63087A	30-801	LG 217
63087A	69-034	LG 217
6414H	75-208	LG 277
64744	75-208	LG 277
6474H	75-208	LG 277
65053	02-531	
67344	32-107	LG 676
67350	70-307	LG 960
67412	32-107	LG 676
67488	32-112	LG 676
6774H	75-208	LG 277
677A14	82-677	LG 903
677A181	82-677	LG 903
677A233	82-677	LG 903
677A880	33-331	LG 730
691035	07-102	LG 774
69229	95-024	LG 465
69334	95-023	LG 380
6944R	75-168	LG 310
701213	95-023	LG 380
702245	72-456	LG 1036
70652	32-107	LG 676
71275	82-677	LG 903
717-0900	82-501	LG 894
717-0900A	82-501	LG 894
717-0906	82-500	LG 893
717-0906A	82-500	LG 893
72818	32-107	LG 676
7322H	95-011	
734-0973	72-318	LG 1042
734-973	72-318	LG 1042
735-0639	75-108	LG 289
73558	82-677	LG 903
740297	40-402	LG 589
740297MA	40-402	LG 589
742-04049	98-061	LG 404
742-04154	98-094	LG 514
742-04154A	98-094	LG 514
742-04308	98-093	LG 411
742-04312	98-093	LG 411
742-0477	98-487	LG 513
742-0480	98-487	LG 513
742-0487	98-487	LG 513
742-0487A	98-487	LG 513
742-0499	98-499	LG 519
742-0499A	98-499	LG 519
742-0536	98-007	LG 401
742-0563	98-007	LG 401
742-0612	98-061	LG 404
742-0612A	98-061	LG 404
742-0642	98-050	LG 521
742-0642A	98-050	LG 521
742-0656	98-093	LG 411
742-0677	98-072	LG 408
742-0677A	98-072	LG 408
742-0677B	98-072	LG 408
742-0721	98-007	LG 401
742-0739	92-140	LG 516
742-0740	98-066	LG 409
742-0742	98-051	LG 521
742-0742A	98-051	LG 521
742-0742A-0637	98-051	LG 521
74977	15-716	LG 315
752233	95-044	LG 465
752233	95-051	LG 465
753-05319	82-500	LG 893
754-0101	75-148	LG 300
754-0101A	75-148	LG 300
754-0131	75-365	LG 862
754-0201	75-441	LG 334
754-0241	75-012	LG 301
754-0241A	75-012	LG 301
754-0280	75-002	LG 301
754-0280A	75-002	LG 301
754-0281	75-281	LG 301
754-0343	75-020	LG 302
754-0355	75-023	LG 302
754-0367	75-157	LG 251
754-0369	75-027	LG 302
754-0370	75-119	LG 302
754-0371	75-028	LG 302
754-0371A	75-028	LG 302
754-04032	75-249	LG 305
754-04032B	75-249	LG 305
754-04050	115-219	LG 305
754-04201	15-052	LG 315
754-04219	15-027	LG 306
754-04252	15-132	LG 306
754-04259	15-133	LG 306
754-04259A	15-133	LG 306
754-0430	75-158	LG 251
754-0430A	75-158	LG 251
754-0430B	75-158	LG 251
754-0431	75-158	LG 251
754-0434	75-999	LG 253
754-0453	75-675	LG 303
754-0465	75-249	LG 305
754-0467	75-995	LG 303
754-0467A	75-995	LG 303
754-0468	75-993	LG 303
754-0472	75-361	LG 254
754-0476	75-364	LG 304
7552H	42-008	LG 945
76686	32-107	LG 676
7754R	33-331	LG 730
7838R	45-109	LG 939
786108	48-148	LG 695
8020	95-024	LG 465
80204	95-024	LG 465
8021	95-023	LG 380
8029	95-024	LG 465
8117J	72-108	LG 1031
8134H	71-816	LG 956
81771	32-112	LG 676
81801	32-112	LG 676
81834	32-107	LG 676
81836	32-107	LG 676
83059	49-170	LG 758
8327X	80-014	LG 727
84352	75-208	LG 277
850053	15-717	LG 260
850972	95-024	LG 465
850973	95-023	LG 380
850977	65-006	LG 340
8514R	45-109	LG 939
851514	65-007	LG 342
85755MA	40-402	LG 589
85757	40-951	LG 587
88074	15-718	LG 259
9040H	45-057	LG 249
917-0900A	82-501	LG 894
917-0906A	82-500	LG 893
917532062828	15-715	LG 315
917532141416	15-700	LG 259
917532165631	15-705	LG 315
917532170140	15-711	LG 259
918-0240	82-515	LG 896
918-0240A	82-515	LG 896
918-0240C	82-515	LG 896
918-0241	82-516	LG 896
918-0241B	82-516	LG 896

X

* OREGON® Gator™ replacement blade

2019 OEM X-Reference

OEM No.	OREGON	Page
SEARS		
918-0430	82-515	LG 896
918-0430A	82-515	LG 896
918-0430B	82-515	LG 896
918-0430C	82-515	LG 896
918-0431	82-516	LG 896
918-0431A	82-516	LG 896
918-0431B	82-516	LG 896
918-0431C	82-516	LG 896
918-04822	82-058	LG 898
918-04822A	82-058	LG 898
918-04822B	82-058	LG 898
918-04889	82-058	LG 898
918-04889A	82-058	LG 898
918-0671	82-519	LG 897
918-0671B	82-519	LG 897
918-0671D	82-519	LG 897
9180R	15-719	LG 312
9396E	80-014	LG 727
942-04154	98-094	LG 514
942-04154A	98-094	LG 514
942-04308	98-093	LG 411
942-04312	98-093	LG 411
942-0487A	98-487	LG 513
942-0612	98-061	LG 404
942-0612A	98-061	LG 404
942-0642	98-050	LG 521
942-0642A	98-050	LG 521
942-0656	98-093	LG 411
942-0677	98-072	LG 408
942-0677A	98-072	LG 408
942-0677B	98-072	LG 408
942-0721	98-007	LG 401
942-0739	92-140	LG 516
942-0740	98-066	LG 409
942-0742	98-051	LG 521
942-0742A	98-051	LG 521
9485H	95-011	
9497R	95-011	
954-0101A	75-148	LG 300
954-0131	75-365	LG 862
954-0201	75-441	LG 334
954-0241	75-012	LG 301
954-0241A	75-012	LG 301
954-0280	75-002	LG 301
954-0280A	75-002	LG 301
954-0281	75-281	LG 301
954-0343	75-020	LG 302
954-0355	75-023	LG 302
954-0367	75-157	LG 251
954-0369	75-027	LG 302
954-0370	75-119	LG 302
954-0371	75-028	LG 302
954-0371A	75-028	LG 302
954-04032A	75-249	LG 305
954-04032B	75-249	LG 305
954-04050	115-219	LG 305
954-04050A	115-219	LG 305
954-04201	15-052	LG 315
954-04201A	15-052	LG 315
954-04219	15-027	LG 306
954-04252	15-132	LG 306
954-04259	15-133	LG 306
954-04259A	15-133	LG 306
954-04265	15-100	LG 306
954-0430	75-158	LG 251
954-0430A	75-158	LG 251
954-0430B	75-158	LG 251
954-0431	75-158	LG 251
954-0434	75-999	LG 253
954-0453	75-675	LG 303
954-0465	75-249	LG 305
954-0467	75-995	LG 303
954-0467A	75-995	LG 303
954-0468	75-993	LG 303
954-0472	75-361	LG 254
954-0476	75-364	LG 304
OCC-742-0739	92-140	LG 516
OEM-754-0101A	75-148	LG 300
OEM-754-0369	75-027	LG 302
OEM-754-04032	75-249	LG 305
OEM-754-0453	75-675	LG 303
PP22055	95-044	LG 465
STD315653	45-205	LG 228
STD315663	45-206	LG 231
STD316414	32-107	LG 676
STD316653	32-112	LG 676
STD324830	75-115	LG 260
STD324990	75-022	LG 307
STD325840	75-179	LG 310
STD333760	72-106	LG 1029
STD365410	42-008	LG 945
STD580019	02-531	
STD580025	02-535	
STD580111	80-014	LG 727
TH5H710	75-168	LG 310
SENSATION MOWER INC.		
083-106	72-746	LG 1032
083-107	72-747	LG 1036
SENTRY HARDWARE		
754-0145	75-145	LG 300
754-0151	75-004	LG 301
754-0178	75-179	LG 310
754-0201	75-441	LG 334
754-0234	75-441	LG 334
754-0935	75-092	LG 304
954-0145	75-145	LG 300
954-0145A	75-145	LG 300
954-0151	75-004	LG 301
954-015A	75-145	LG 300
954-0178	75-179	LG 310
954-0201	75-441	LG 334
954-0234	75-441	LG 334
954-0935	75-092	LG 304
SERVICE MERCHANDISE		
754-0201	75-441	LG 334
754-0234	75-441	LG 334
754-0935	75-092	LG 304
954-0201	75-441	LG 334
954-0234	75-441	LG 334
954-0935	75-092	LG 304
SERVISTAR		
754-0145	75-145	LG 300
754-0151	75-004	LG 301
754-0201	75-441	LG 334
754-0234	75-441	LG 334
754-0935	75-092	LG 304
954-0145	75-145	LG 300
954-0145A	75-145	LG 300
954-0151	75-004	LG 301
954-015A	75-145	LG 300
954-0201	75-441	LG 334
954-0234	75-441	LG 334
954-0935	75-092	LG 304
SHINDAIWA		
1082	55-231	LG 212
200000-85200	55-097	LG 772
2000051103	55-121	LG 1024
20000-51103	55-121	LG 1024
2000051104	55-121	LG 1024
20000-51104	55-121	LG 1024
20000-75140	43-685	LG 936
2000081740	55-231	LG 212
20000-81740	55-231	LG 212
20000-81740S	55-231	LG 212
20000-85200	55-097	LG 772
20000-85303	55-139	LG 763
20010-72221	33-516	LG 866
2001131200	57-050	LG 1024
20011-31200	57-050	LG 1024
20011-854	07-011	LG 763
2001185400	07-011	LG 763
2001185400	55-112	LG 778
20011-85400	55-112	LG 778
2001185401	07-011	LG 763
2001185401	55-112	LG 778
20011-8545	07-011	LG 763
20011-85450	07-011	LG 763
2001185451	07-011	LG 763
2001185451	55-112	LG 778
20011-85451	07-011	LG 763
2001185459	07-011	LG 763
2001185459	55-112	LG 778
20011-85459	07-011	LG 763
2001851100	55-121	LG 1024
20018-51100	55-121	LG 1024
2001851101	55-121	LG 1024
2002151101	57-050	LG 1024
20021-51101	57-050	LG 1024
2002151102	57-050	LG 1024
20021-51102	57-050	LG 1024
2002161101	57-050	LG 1024
20021-61101	57-050	LG 1024
200355100	55-253	LG 1024
20035-5100	55-253	LG 1024
2003551100	55-253	LG 1024
2003551101	55-253	LG 1024
20035-51101	55-253	LG 1024
20035-81700	55-231	LG 212
20036-81670	49-026	LG 769
22100-81310	49-021	LG 629
22102-72220	33-516	LG 866
28820-07340	55-336	LG 986
309891	55-231	LG 212
3801082581	30-719	LG 212
38010-82581	30-719	LG 212
4114-124-0800	55-231	LG 212
6002398031	30-721	LG 213
60023-98031	30-721	LG 213
69601552630	40-141	LG 585
69601552631	40-141	LG 585
69601552632	40-141	LG 585
70029-81480	49-020	LG 631
70030-81380	55-342	LG 627
7006482210	55-510	LG 212
70064-82210	55-510	LG 212
7014051100	55-253	LG 1024
7014051101	55-121	LG 1024
7014051102	55-121	LG 1024
7014051102	55-253	LG 1024
70140-51102	55-121	LG 1024
70140-51102	55-253	LG 1024
717916	43-685	LG 936
72078-15240	55-804-1	LG 994
72078-15280	55-807	LG 994
78890-18001	55-294	LG 986
78890-21001	55-265	LG 986
99909-0020	40-141	LG 585
99909-105	49-829	LG 605
99909-125	49-827	LG 608
99909-15580	55-355-1	LG 994
99909-49	55-343	LG 627
A056000260	55-121	LG 1024
A056000260	55-253	LG 1024
A056000500	55-121	LG 1024
A226000590	55-510	LG 212
A226000670	55-231	LG 212
A226001270	30-719	LG 212
V470001110	07-011	LG 763
SIERRA		
7-01641	33-340	LG 784
7-01643	33-344	LG 784
7-02025	49-078	LG 603
7-02045	49-102	LG 602
7-02210	30-044	LG 179
7-02228	30-101	LG 179
7-02238	30-400	LG 193
7-02239	30-094	LG 180
7-02240	30-104	LG 180
7-02249	30-405	LG 193
7-02257	30-710	LG 181
7-02265	30-107	LG 180
7-02275	30-923	LG 186
7-02278	30-920	LG 186
7-02282	30-929	LG 187
7-02283	30-924	LG 186
7-02286	30-927	LG 187
7-02708	30-401	LG 193
7-02742	30-049	LG 181
7-03651	35-001	LG 806
7-03664	35-005	LG 806
7-03670	35-026	LG 807
7-07103	07-101	LG 775
7-07175	30-925	LG 187
7-07183	30-318	LG 193
7-08306	30-709	LG 194
SIMPLICITY		
101096	34-044	LG 821
108202	45-295	LG 232
108202SM	45-295	LG 232
108386	34-015	LG 821
108505	75-218	LG 316
108508	75-372	LG 316
108508SM	75-372	LG 316
117414	34-001	LG 821
118011	45-259	LG 224
118414	34-002	LG 821
11913	599-133*	LG 422
11913	96-133*	LG 422
11914	599-133*	LG 422
11914	96-133*	LG 422
11949	599-133*	LG 422
11949	96-133*	LG 422
154393	45-206	LG 231
154486	45-205	LG 228
154534	34-009	LG 821
156124	34-009	LG 821
156316	45-003	LG 244
156316SM	45-003	LG 244
1601520	75-218	LG 316
1603515	34-009	LG 821
1610191	34-009	LG 821
163011	15-735	LG 316
1636451	91-713	LG 422
1636451SM	91-713	LG 422
164268	34-017	LG 821
1650954	83-300	LG 819
1650954SM	83-300	LG 819
165147A	92-146	LG 539
165147ASM	92-146	LG 539
165147SM	92-146	LG 539
1652231	45-259	LG 224
1653975	91-713	LG 422
1654930	07-392	LG 767
1654930SM	07-392	LG 767
1656043	91-713	LG 422
1656146	91-715	LG 541
1656146A	91-715	LG 541
1656146ASM	91-715	LG 541
1656146SM	91-715	LG 541
1656147	92-146	LG 539
1656147A	92-146	LG 539
1656147ASM	92-146	LG 539

X

* OREGON® Gator™ replacement blade

SIMPLICITY

OEM No.	OREGON	Page
1656147SM	92-146	LG 539
1656149A	91-715	LG 541
1657044	15-724	LG 316
1657044-2	15-724	LG 316
1657044SM	15-724	LG 316
1657589	91-713	LG 422
1657589A	91-713	LG 422
1657589ASM	91-713	LG 422
1657589SM	91-713	LG 422
1657827	34-003	LG 821
1659916A	91-703	LG 541
1659916ASM	91-703	LG 541
1659916BMA	91-703	LG 541
1659916BZ	91-703	LG 541
1659916SM	91-703	LG 541
166	33-024	LG 945
1663885	75-066	LG 251
1663885SM	75-066	LG 251
1665521	45-242	LG 243
1665521SM	45-242	LG 243
1665638	15-731	LG 316
1665638SM	15-731	LG 316
1666292	45-257	LG 245
1666292-6	45-257	LG 245
1666292SM	45-257	LG 245
1666698	15-733	LG 316
1666698SM	15-733	LG 316
1668066	75-371	LG 316
1668066SM	75-371	LG 316
1668477	34-006	LG 821
1668477SM	34-006	LG 821
1669804	33-024	LG 945
1670835	15-729	LG 316
1670835SM	15-729	LG 316
1671593	91-714	LG 543
1671593A	91-714	LG 543
1671593ASM	91-714	LG 543
1671593SM	91-714	LG 543
1671994	33-330	LG 729
1671994SM	33-330	LG 729
1675800	33-384	LG 947
1675800SM	33-384	LG 947
16771993	33-334	LG 730
1679916	91-703	LG 541
1679916A	91-703	LG 541
1679916ASM	91-703	LG 541
1679916BZYP	91-703	LG 541
1679916SM	91-703	LG 541
1685144SM	34-009	LG 821
1685144SM	34-017	LG 821
1685151	34-023	LG 822
1685290	33-334	LG 730
1685290	33-335	LG 730
1685290	33-336	LG 730
1685290SM	33-334	LG 730
1685290SM	33-335	LG 730
1685290SM	33-336	LG 730
1685291	33-334	LG 730
1685291	33-335	LG 730
1685291	33-336	LG 730
1685291SM	33-334	LG 730
1685291SM	33-335	LG 730
1685291SM	33-336	LG 730
16852980	33-334	LG 730
1686637	33-397	LG 942
1686637SM	33-397	LG 942
1686882SM	33-111	LG 735
1686981	33-330	LG 729
1686981	33-334	LG 730
1686981	33-335	LG 730
1686981	33-336	LG 730
1686981SM	33-330	LG 729
1686981SM	33-334	LG 730
1686981SM	33-335	LG 730
1686981SM	33-336	LG 730
1686981YP	33-334	LG 730
1686982	33-330	LG 729
1686982SM	33-330	LG 729
1687016	91-615	LG 522
1687016SM	91-615	LG 522
1687017	91-616	LG 543
1687017	96-398*	LG 525
1687017SM	91-616	LG 543
1687017SM	96-398*	LG 525
170051	33-334	LG 730
1700751	33-334	LG 730
1700751	33-335	LG 730
1700751	33-336	LG 730
1700751SM	33-334	LG 730
1700751SM	33-335	LG 730
1700751SM	33-336	LG 730
17027774	590-685*	LG 540
17027774	90-685*	LG 540
17027774	91-705	LG 540
17027774SM	590-685*	LG 540
17027774SM	90-685*	LG 540
17027774SM	91-705	LG 540
1703466	15-731	LG 316
1703466SM	15-731	LG 316
1703836	15-732	LG 316
1704100	590-685*	LG 540
1704100	90-685*	LG 540
1704100	91-705	LG 540
1704100A	590-685*	LG 540
1704100A	90-685*	LG 540
1704100A	91-705	LG 540
1704100ASM	590-685*	LG 540
1704100ASM	90-685*	LG 540
1704100ASM	91-705	LG 540
1704100BMA	590-685*	LG 540
1704100BMA	90-685*	LG 540
1704100BMA	91-705	LG 540
1704100BZ	590-685*	LG 540
1704100BZ	90-685*	LG 540
1704100BZ	91-705	LG 540
1704100SM	590-685*	LG 540
1704100SM	90-685*	LG 540
1704100SM	91-705	LG 540
1704101	91-701	LG 545
1704101	96-654*	LG 511
1704101A	91-701	LG 545
1704101A	96-654*	LG 511
1704101ASM	91-701	LG 545
1704101ASM	96-654*	LG 511
1704101BM	91-701	LG 545
1704101BM	96-654*	LG 511
1704101BMA	91-701	LG 545
1704101BMA	96-654*	LG 511
1704101BZ	91-701	LG 545
1704101BZ	96-654*	LG 511
1704101SM	91-701	LG 545
1704101SM	96-654*	LG 511
1704856	590-685*	LG 540
1704856	90-685*	LG 540
1704856	91-723	LG 508
1704856A	590-685*	LG 540
1704856A	90-685*	LG 540
1704856A	91-723	LG 508
1704856ASM	590-685*	LG 540
1704856ASM	90-685*	LG 540
1704856ASM	91-723	LG 508
1704856BMA	590-685*	LG 540
1704856BMA	90-685*	LG 540
1704856BMA	91-723	LG 508
1704856BZ	590-685*	LG 540
1704856BZ	90-685*	LG 540
1704856BZ	91-723	LG 508
1704856SM	590-685*	LG 540
1704856SM	90-685*	LG 540
1704856SM	91-723	LG 508
1705897	45-257	LG 245
1705897SM	45-257	LG 245
1708229	390-698*	LG 542
1708229	590-698*	LG 510
1708229	90-698*	LG 510
1708229	91-706	LG 550
1708229A	390-698*	LG 542
1708229A	590-698*	LG 510
1708229A	90-698*	LG 510
1708229A	91-706	LG 550
1708229ASM	390-698*	LG 542
1708229ASM	590-698*	LG 510
1708229ASM	90-698*	LG 510
1708229ASM	91-706	LG 550
1708229BMA	390-698*	LG 542
1708229BMA	590-698*	LG 510
1708229BMA	90-698*	LG 510
1708229BMA	91-706	LG 550
1708229BZ	390-698*	LG 542
1708229BZ	590-698*	LG 510
1708229BZ	90-698*	LG 510
1708229BZ	91-706	LG 550
1708229SM	390-698*	LG 542
1708229SM	590-698*	LG 510
1708229SM	90-698*	LG 510
1708229SM	91-706	LG 550
1708536	33-111	LG 735
1708536SM	33-111	LG 735
1708536YP	33-111	LG 735
1709906	07-392	LG 767
1713515	75-372	LG 316
1713515SM	75-372	LG 316
1713549	75-218	LG 316
1713549SM	75-218	LG 316
171439	83-300	LG 819
1714519	73-008	LG 848
1716606SM	73-008	LG 848
1716695	91-701	LG 545
1716695	96-654*	LG 511
1716695A	91-701	LG 545
1716695A	96-654*	LG 511
1716695ASM	91-701	LG 545
1716695ASM	96-654*	LG 511
1716695SM	91-701	LG 545
1716695SM	96-654*	LG 511
1716696	590-685*	LG 540
1716696	90-685*	LG 540
1716696	91-705	LG 540
1716696A	590-685*	LG 540
1716696A	90-685*	LG 540
1716696A	91-705	LG 540
1716696ASM	590-685*	LG 540
1716696ASM	90-685*	LG 540
1716696ASM	91-705	LG 540
1716696SM	590-685*	LG 540
1716696SM	90-685*	LG 540
1716696SM	91-705	LG 540
1716697	390-698*	LG 542
1716697	590-698*	LG 510
1716697	90-698*	LG 510
1716697	91-706	LG 550
1716697A	390-698*	LG 542
1716697A	590-698*	LG 510
1716697A	90-698*	LG 510
1716697A	91-706	LG 550
1716697ASM	390-698*	LG 542
1716697ASM	590-698*	LG 510
1716697ASM	90-698*	LG 510
1716697ASM	91-706	LG 550
1716697BMA	390-698*	LG 542
1716697BMA	590-698*	LG 510
1716697BMA	90-698*	LG 510
1716697BMA	91-706	LG 550
1716697BZ	390-698*	LG 542
1716697BZ	590-698*	LG 510
1716697BZ	90-698*	LG 510
1716697BZ	91-706	LG 550
1716697SM	390-698*	LG 542
1716697SM	590-698*	LG 510
1716697SM	90-698*	LG 510
1716697SM	91-706	LG 550
171669A	91-705	LG 540
1716854	15-733	LG 316
1716854SM	15-733	LG 316
1718017	15-734	LG 316
1718017SM	15-734	LG 316
1721086	390-698*	LG 542
1721086	590-698*	LG 510
1721086	90-698*	LG 510
1721086A	390-698*	LG 542
1721086A	590-698*	LG 510
1721086A	90-698*	LG 510
1721086ASM	390-698*	LG 542
1721086ASM	590-698*	LG 510
1721086ASM	90-698*	LG 510
1722039SM	15-735	LG 316
1722090	91-615	LG 522
1725921	96-398*	LG 525
1725921A	96-398*	LG 525
1725921ASM	96-398*	LG 525
1725921SM	96-398*	LG 525
1726357	91-706	LG 550
1726357SM	91-706	LG 550
1726453	390-698*	LG 542
1726453	590-698*	LG 510
1726453	90-698*	LG 510
1726453	91-706	LG 550
1726453A	390-698*	LG 542
1726453A	590-698*	LG 510
1726453A	90-698*	LG 510
1726453A	91-706	LG 550
1726453ASM	390-698*	LG 542
1726453ASM	590-698*	LG 510
1726453ASM	90-698*	LG 510
1726453ASM	91-706	LG 550
1726453BMA	390-698*	LG 542
1726453BMA	590-698*	LG 510
1726453BMA	90-698*	LG 510
1726453BMA	91-706	LG 550
1726453BZ	390-698*	LG 542
1726453BZ	590-698*	LG 510
1726453BZ	90-698*	LG 510
1726453BZ	91-706	LG 550
1726453BZYP	390-698*	LG 542
1726453BZYP	590-698*	LG 510
1726453BZYP	90-698*	LG 510
1726453BZYP	91-706	LG 550
1726453SM	390-698*	LG 542
1726453SM	590-698*	LG 510
1726453SM	90-698*	LG 510
1726453SM	91-706	LG 550
1727773SM	75-218	LG 316
1727774	590-685*	LG 540
1727774	90-685*	LG 540
1727774	91-705	LG 540
1727774A	590-685*	LG 540
1727774A	90-685*	LG 540
1727774A	91-705	LG 540
1727774ASM	590-685*	LG 540
1727774ASM	90-685*	LG 540
1727774ASM	91-705	LG 540
1727774BMA	590-685*	LG 540
1727774BMA	90-685*	LG 540
1727774BMA	91-705	LG 540
1727774BZ	590-685*	LG 540
1727774BZ	90-685*	LG 540
1727774BZ	91-705	LG 540
1727774SM	590-685*	LG 540
1727774SM	90-685*	LG 540

X

2019 OEM X-Reference

OEM No.	OREGON	Page
SIMPLICITY		
1727774SM	91-705	LG 540
1731898	391-610*	LG 554
1731898	91-610	LG 554
1731898A	391-610*	LG 554
1731898A	91-610	LG 554
1731898ASM	391-610*	LG 554
1731898ASM	91-610	LG 554
1731898BMA	391-610*	LG 554
1731898BMA	91-610	LG 554
1731898BZ	391-610*	LG 554
1731898BZ	91-610	LG 554
1731898BZYP	391-610*	LG 554
1731898BZYP	91-610	LG 554
1736043	91-616	LG 543
1736043	96-398*	LG 525
1736043A	91-616	LG 543
1736043A	96-398*	LG 525
1736043AYP	91-616	LG 543
1736043AYP	96-398*	LG 525
1736043BM	91-616	LG 543
1736043BM	96-398*	LG 525
1736043BMA	91-616	LG 543
1736043BMA	96-398*	LG 525
1736043BMA	96-398*	LG 525
1736043BMYP	91-616	LG 543
1736043BMYP	96-398*	LG 525
1736043BZ	91-616	LG 543
1736043BZ	96-398*	LG 525
1737228	599-132*	LG 522
1737228	99-132	LG 539
1737228A	599-132*	LG 522
1737228A	99-132	LG 539
1737228AYP	599-132*	LG 522
1737228AYP	99-132	LG 539
1737228BM	599-132*	LG 522
1737228BM	99-132	LG 539
1737228BMA	599-132*	LG 522
1737228BMA	99-132	LG 539
1737228BZ	599-132*	LG 522
1737228BZ	99-132	LG 539
1737228BZYP	599-132*	LG 522
1737228BZYP	99-132	LG 539
1737228SM	599-132*	LG 522
1737228SM	99-132	LG 539
1737228YP	599-132*	LG 522
1737228YP	99-132	LG 539
1737252	599-133*	LG 422
1737252	96-133*	LG 422
1737252	99-133	LG 542
1737252A	599-133*	LG 422
1737252A	96-133*	LG 422
1737252A	99-133	LG 542
1737252AYP	599-133*	LG 422
1737252AYP	96-133*	LG 422
1737252AYP	99-133	LG 542
1737252BM	599-133*	LG 422
1737252BM	96-133*	LG 422
1737252BM	99-133	LG 542
1737252BMA	599-133*	LG 422
1737252BMA	96-133*	LG 422
1737252BMA	99-133	LG 542
1737252BZ	599-133*	LG 422
1737252BZ	96-133*	LG 422
1737252BZ	99-133	LG 542
1737252BZYP	599-133*	LG 422
1737252BZYP	96-133*	LG 422
1737252BZYP	99-133	LG 542
1737252SM	599-133*	LG 422
1737252SM	96-133*	LG 422
1737252SM	99-133	LG 542
1737252YP	599-133*	LG 422
1737252YP	96-133*	LG 422
1737252YP	99-133	LG 542
1737816	391-605*	LG 544
1737816	91-605	LG 544
1737816BM	391-605*	LG 544
1737816BM	91-605	LG 544
1737816BMA	391-605*	LG 544
1737816BMA	91-605	LG 544
1737816BMYP	391-605*	LG 544
1737816BMYP	91-605	LG 544
1737816BZ	391-605*	LG 544
1737816BZ	91-605	LG 544
1737816SM	391-605*	LG 544
1737816SM	91-605	LG 544
1737816YP	391-605*	LG 544
1737816YP	91-605	LG 544
1739889	599-132*	LG 522
1739889A	599-132*	LG 522
1739889AYP	599-132*	LG 522
1739889BM	599-132*	LG 522
1739889BMA	599-132*	LG 522
1756152AYP	396-726*	LG 391
1756152AYP	596-344*	LG 495
1756152AYP	91-256	LG 437
1756152AYP	96-344*	LG 536
1756152SYP	396-726*	LG 391
1756152SYP	596-344*	LG 495
1756152SYP	91-256	LG 437
1756152SYP	96-344*	LG 536
1757303YP	391-606*	LG 547
1757303YP	91-606	LG 509
1758878BMYP	391-607*	LG 511
1758878BMYP	91-607	LG 544
1759055YP	391-614*	LG 548
177954	75-218	LG 316
178280	33-386	LG 942
179889BZ	599-132*	LG 522
2026320	34-044	LG 821
2101096SM	34-044	LG 821
2108202	45-295	LG 232
2108202SM	45-295	LG 232
2108386SM	34-015	LG 821
2108508	75-372	LG 316
2118414SM	34-002	LG 821
2154258SM	45-295	LG 232
2154393SM	45-206	LG 231
2154486SM	45-205	LG 228
2154534SM	34-023	LG 822
2156124SM	34-009	LG 821
2156316	45-003	LG 244
2156316SM	45-003	LG 244
2171439	83-300	LG 819
2178280SM	33-386	LG 942
5022808ASM	396-727*	LG 467
5022808ASM	596-347*	LG 448
5022808ASM	91-626	LG 552
5022808ASM	96-347*	LG 387
5101756S	396-726*	LG 391
5101756S	596-344*	LG 495
5101756S	91-312	LG 478
5101756S	96-344*	LG 536
5101756SYP	396-726*	LG 391
5101756SYP	596-344*	LG 495
5101756SYP	91-312	LG 478
5101756SYP	96-344*	LG 536
5101986S	396-716*	LG 451
5101986S	596-310*	LG 447
5101986S	91-313	LG 494
5101986S	96-310*	LG 444
5101986SYP	396-716*	LG 451
5101986SYP	596-310*	LG 447
5101986SYP	91-313	LG 494
5101986SYP	96-310*	LG 444
5102227S	396-731*	LG 427
5102227SYP	396-731*	LG 427
5103304SYP	396-726*	LG 391
5103304SYP	596-344*	LG 495
5103304SYP	91-335	LG 420
5103304SYP	96-344*	LG 536
5104045SYP	396-727*	LG 467
5104045SYP	596-347*	LG 448
5104045SYP	91-308	LG 467
5104045SYP	96-347*	LG 387
536986	45-295	LG 232
539118672	599-133*	LG 422
539118672	96-133*	LG 422
539118673	599-133*	LG 422
539118673	96-133*	LG 422
668827	34-034	LG 821
7035948SM	73-823	LG 849
7100851A	99-134	LG 527
7100851AYP	99-134	LG 527
7100851BM	99-134	LG 527
7100851BMYP	99-134	LG 527
7100851BZ	99-134	LG 527
71601520	75-218	LG 316
71654930	07-392	LG 767
71656147	92-146	LG 539
71657044	15-724	LG 316
71657589	91-713	LG 422
71663885	75-066	LG 251
71665521	45-242	LG 243
71666292	45-257	LG 245
71666698	15-733	LG 316
71668066	75-371	LG 316
71670835	15-729	LG 316
71671593	91-714	LG 543
71679916	91-703	LG 541
71704100	590-685*	LG 540
71704100	90-685*	LG 540
71704100	91-705	LG 540
71704100A	590-685*	LG 540
71704100A	90-685*	LG 540
71704100A	91-705	LG 540
71704101	91-701	LG 545
71704101	96-654*	LG 511
71704856	590-685*	LG 540
71704856	90-685*	LG 540
71704856	91-723	LG 508
72027134	75-218	LG 316
72029622	75-218	LG 316
72116711	75-218	LG 316
A48185	396-726*	LG 391
A48185	596-344*	LG 495
A48185	91-623	LG 485
A48185	96-344*	LG 536
SITREX		
SM31150	15-737	LG 316
SKIL		
313450	49-816	LG 612
313451	49-812	LG 612
SNAPPER		
023966YP	78-110	LG 833
1-0061	80-036	LG 727
1-0210	80-014	LG 727
1-0211	02-535	
102424	33-002	LG 946
1-0525	71-800	LG 956
10570	45-000	LG 237
10570	45-010	LG 238
1-0570	45-010	LG 238
10696	45-295	LG 232
1-0696	45-295	LG 232
10743	45-083	LG 246
1-0743	45-083	LG 246
1-0745	45-104	LG 939
10749	75-068	LG 318
1-0749	175-068	LG 318
1-0749	75-068	LG 318
10765	76-067-0	LG 726
1-0765	76-067-0	LG 726
1-0787	44-347	LG 840
1-0821	71-276	LG 956
1-0821	71-400	LG 956
1-0927	51-001-0	LG 727
1-0943	45-010	LG 238
1-0948	34-002	LG 821
1-0953	45-000	LG 237
10986	45-081	LG 249
1-0986	45-081	LG 249
1-1011	81-102	LG 805
11021823	99-134	LG 527
1-1024	45-110	LG 245
1-1029	34-038	LG 821
1-1035	80-745	LG 728
11048	48-206	LG 246
1-1048	48-206	LG 246
11082	72-450	LG 1037
1-1082	72-450	LG 1037
1-1083	72-450	LG 1037
1-1083	72-510	LG 1036
11099	45-083	LG 246
1-1099	45-083	LG 246
11100	45-083	LG 246
1-1100	45-083	LG 246
11117	75-059	LG 318
1-1117	75-059	LG 318
11130	60-061	LG 718
1-1130	60-061	LG 718
1-1138	42-008	LG 945
1-1155	33-387	LG 945
1-1709	02-103	LG 722
1-1777	07-101	LG 775
1-1777	07-102	LG 774
11802	72-450	LG 1037
11807	45-000	LG 237
11807	45-010	LG 238
1-1807	45-000	LG 237
1-1807	45-010	LG 238
1-1807	45-034	LG 224
1-1853	33-390	
1-18877	75-508	LG 319
11913	599-133*	LG 422
11913	96-133*	LG 422
11914	599-133*	LG 422
11914	96-133*	LG 422
11949	599-133*	LG 422
11949	96-133*	LG 422
11991	60-991	LG 718
1-1991	60-991	LG 718
12061	60-061	LG 718
1-2061	60-061	LG 718
1-2122	05-061	LG 914
1-2123	05-060	LG 914
1-2124	34-021	LG 833
12140	44-500	LG 840
1-2304	45-209	LG 246
1-2321	86-010	LG 782
1-2337	07-392	LG 767
1-2345	72-442	LG 1037
1-2347	72-510	LG 1036
12348	72-442	LG 1037
12348	72-450	LG 1037
1-2348	72-442	LG 1037
1-2348	72-450	LG 1037
12353	75-353	LG 319
1-2353	75-353	LG 319
12354	75-354	LG 319
1-2354	75-354	LG 319
1-2390	45-000	LG 237
1-2390	45-047	LG 241
1-2401	44-500	LG 840
12425	46-024	LG 719
1-2425	46-024	LG 719
12496	72-442	LG 1037

X

* OREGON® Gator™ replacement blade

SNAPPER

OEM No.	OREGON	Page
1-2496	72-442	LG 1037
12508	75-508	LG 319
1-2508	75-508	LG 319
1-2515	07-308	LG 772
12579	72-109	LG 1037
1-2579	72-109	LG 1037
1-2623	33-021	LG 950
1-2699	02-535	
1-2757	80-014	LG 727
1-2828	45-259	LG 224
1-2830	80-036	LG 727
1-2927	65-229	LG 342
1-2931	45-205	LG 228
1-3000	80-036	LG 727
1305379	45-000	LG 237
1305379	45-010	LG 238
1-3249	80-036	LG 727
1-3250	80-014	LG 727
13313	45-295	LG 232
1-3313	45-295	LG 232
13321	45-083	LG 246
1-3321	45-083	LG 246
1-3694	05-060	LG 914
1-3850	34-005	LG 821
13865	80-740	LG 852
1-3865	80-740	LG 852
1-4033	02-535	
1-4153	34-009	LG 821
1-4208	34-031	LG 821
1-4340	34-003	LG 821
14359	07-102	LG 774
1-4359	07-101	LG 775
1-4359	07-102	LG 774
14398	15-739	LG 316
1-4483	45-057	LG 249
1-4514	45-242	LG 243
1-4523	49-018	LG 728
14525	75-105	LG 319
1-4525	15-746	LG 317
1-4525	175-105	LG 319
1-4525	75-105	LG 319
14539	07-101	LG 775
14604	72-442	LG 1037
1-4604	72-442	LG 1037
147559	45-209	LG 246
14799	15-740	LG 316
14800	15-741	LG 317
1-4800	15-741	LG 317
15474	45-000	LG 237
1-5474	45-000	LG 237
1-5474	45-010	LG 238
1-6325	07-406	LG 767
1656147A	92-146	LG 539
1656147ASM	92-146	LG 539
1657589A	91-713	LG 422
1671593A	91-714	LG 543
1671593ASM	91-714	LG 543
1687016	91-615	LG 522
1687016SM	91-615	LG 522
1687017	91-616	LG 543
1687017	96-398*	LG 525
1687017SM	91-616	LG 543
1687017SM	96-398*	LG 525
1687398	91-615	LG 522
1-6982	99-117	LG 556
17002	96-620*	LG 551
17002	99-103	LG 551
1-7002	99-103	LG 551
1-7002	99-107	LG 551
1-7002	99-121	LG 551
17027774	590-685*	LG 540
17027774	90-685*	LG 540
17027774	91-705	LG 540
17037	396-726*	LG 391
17037	596-344*	LG 495
17037	91-181	LG 495
17037	96-344*	LG 536
1704100	590-685*	LG 540
1704100	90-685*	LG 540
1704100	91-705	LG 540
1704100A	590-685*	LG 540
1704100A	90-685*	LG 540
1704100A	91-705	LG 540
1704100ASM	91-705	LG 540
1704100BMA	590-685*	LG 540
1704100BMA	90-685*	LG 540
1704100BMA	91-705	LG 540
1704100BZ	590-685*	LG 540
1704100BZ	90-685*	LG 540
1704100BZ	91-705	LG 540
1704100SM	91-705	LG 540
17043	396-735*	LG 452
17043	596-308*	LG 548
17043	96-308*	LG 456
17043	99-126	LG 501
1-7043	91-126	LG 548
1-7043	99-126	LG 501
1-7048	48-145	LG 698
1704856	590-685*	LG 540
1704856	90-685*	LG 540
1704856	91-723	LG 508
1704856A	590-685*	LG 540
1704856A	90-685*	LG 540
1704856A	91-723	LG 508
1704856ASM	590-685*	LG 540
1704856ASM	90-685*	LG 540
1704856ASM	91-723	LG 508
1704856BMA	590-685*	LG 540
1704856BMA	90-685*	LG 540
1704856BMA	91-723	LG 508
1704856BZ	590-685*	LG 540
1704856BZ	90-685*	LG 540
1704856BZ	91-723	LG 508
17053	15-742	LG 317
1-7063	33-114	LG 734
17081	396-727*	LG 467
17081	596-347*	LG 448
17081	91-308	LG 467
17081	96-347*	LG 387
1708229	390-698*	LG 542
1708229	590-698*	LG 510
1708229	90-698*	LG 510
1708229	91-706	LG 550
1708229A	390-698*	LG 542
1708229A	590-698*	LG 510
1708229A	90-698*	LG 510
1708229A	91-706	LG 550
1708229ASM	390-698*	LG 542
1708229ASM	590-698*	LG 510
1708229ASM	90-698*	LG 510
1708229ASM	91-706	LG 550
1708229BMA	390-698*	LG 542
1708229BMA	590-698*	LG 510
1708229BMA	90-698*	LG 510
1708229BMA	91-706	LG 550
1-7083	81-102	LG 805
1-7084	81-101	
1716696	590-685*	LG 540
1716696	90-685*	LG 540
1716696	91-705	LG 540
1716696A	590-685*	LG 540
1716696A	90-685*	LG 540
1716696A	91-705	LG 540
1716696ASM	590-685*	LG 540
1716696ASM	90-685*	LG 540
1716696ASM	91-705	LG 540
1716696SM	590-685*	LG 540
1716696SM	90-685*	LG 540
1716696SM	91-705	LG 540
1716697	390-698*	LG 542
1716697	590-698*	LG 510
1716697	90-698*	LG 510
1716697	91-706	LG 550
1716697A	390-698*	LG 542
1716697A	590-698*	LG 510
1716697A	90-698*	LG 510
1716697A	91-706	LG 550
1716697ASM	390-698*	LG 542
1716697ASM	590-698*	LG 510
1716697ASM	90-698*	LG 510
1716697ASM	91-706	LG 550
1716697BMA	390-698*	LG 542
1716697BMA	590-698*	LG 510
1716697BMA	90-698*	LG 510
1716697BMA	91-706	LG 550
1716697BZ	390-698*	LG 542
1716697BZ	590-698*	LG 510
1716697BZ	90-698*	LG 510
1716697BZ	91-706	LG 550
1716697SM	390-698*	LG 542
1716697SM	590-698*	LG 510
1716697SM	90-698*	LG 510
1716697SM	91-706	LG 550
17168	96-620*	LG 551
17168	99-121	LG 551
1-7168	99-121	LG 551
1721086	390-698*	LG 542
1721086	590-698*	LG 510
1721086	90-698*	LG 510
1721086A	390-698*	LG 542
1721086A	590-698*	LG 510
1721086A	90-698*	LG 510
1721086ASM	390-698*	LG 542
1721086ASM	590-698*	LG 510
1721086ASM	90-698*	LG 510
1722090	91-615	LG 522
1722090A	91-615	LG 522
1723507	33-026	LG 947
1725921	96-398*	LG 525
1725921A	96-398*	LG 525
1725921ASM	96-398*	LG 525
1725921AYP	96-398*	LG 525
1725921SM	96-398*	LG 525
1726453	390-698*	LG 542
1726453	590-698*	LG 510
1726453	90-698*	LG 510
1726453	91-706	LG 550
1726453A	390-698*	LG 542
1726453A	590-698*	LG 510
1726453A	90-698*	LG 510
1726453A	91-706	LG 550
1726453ASM	390-698*	LG 542
1726453ASM	590-698*	LG 510
1726453ASM	90-698*	LG 510
1726453ASM	91-706	LG 550
1726453BMA	390-698*	LG 542
1726453BMA	590-698*	LG 510
1726453BMA	90-698*	LG 510
1726453BMA	91-706	LG 550
1726453BZ	390-698*	LG 542
1726453BZ	590-698*	LG 510
1726453BZ	90-698*	LG 510
1726453BZ	91-706	LG 550
1726453BZP	390-698*	LG 542
1726453BZP	590-698*	LG 510
1726453BZP	90-698*	LG 510
1726453BZP	91-706	LG 550
1726453BZYP	390-698*	LG 542
1726453BZYP	590-698*	LG 510
1726453BZYP	90-698*	LG 510
1726453BZYP	91-706	LG 550
1727774	590-685*	LG 540
1727774	90-685*	LG 540
1727774	91-705	LG 540
1727774A	590-685*	LG 540
1727774A	90-685*	LG 540
1727774A	91-705	LG 540
1727774BMA	590-685*	LG 540
1727774BMA	90-685*	LG 540
1727774BMA	91-705	LG 540
1727774BZ	590-685*	LG 540
1727774BZ	90-685*	LG 540
1727774BZ	91-705	LG 540
1731898	391-610*	LG 554
1731898	91-610	LG 554
1731898A	391-610*	LG 554
1731898A	91-610	LG 554
1731898ASM	391-610*	LG 554
1731898ASM	91-610	LG 554
1731898BMA	391-610*	LG 554
1731898BMA	91-610	LG 554
1731898BZ	391-610*	LG 554
1731898BZ	91-610	LG 554
1731898BZYP	391-610*	LG 554
1731898BZYP	91-610	LG 554
1732006	33-026	LG 947
1732006SM	33-026	LG 947
1732006YP	33-026	LG 947
1-7326	05-060	LG 914
1736043	91-616	LG 543
1736043	96-398*	LG 525
1736043A	91-616	LG 543
1736043A	96-398*	LG 525
1736043AYP	91-616	LG 543
1736043AYP	96-398*	LG 525
1736043BM	91-616	LG 543
1736043BM	96-398*	LG 525
1736043BMA	91-616	LG 543
1736043BMA	96-398*	LG 525
1736043BMYP	91-616	LG 543
1736043BMYP	96-398*	LG 525
1736043BZ	91-616	LG 543
1736043BZ	96-398*	LG 525
1736044	91-615	LG 522
1736044A	91-615	LG 522
1736044AYP	91-615	LG 522
1737228	599-132*	LG 522
1737228	99-132	LG 539
1737228A	99-132	LG 539
1737228AYP	599-132*	LG 522
1737228AYP	99-132	LG 539
1737228BM	99-132	LG 539
1737228BMA	99-132	LG 539
1737228BZ	99-132	LG 539
1737228BZYP	599-132*	LG 522
1737228BZYP	99-132	LG 539
1737228YP	99-132	LG 539
1737252	599-133*	LG 422
1737252	96-133*	LG 422
1737252	99-133	LG 542
1737252A	599-133*	LG 422
1737252A	96-133*	LG 422
1737252A	99-133	LG 542
1737252AYP	599-133*	LG 422
1737252AYP	96-133*	LG 422
1737252AYP	99-133	LG 542
1737252BM	599-133*	LG 422
1737252BM	96-133*	LG 422
1737252BM	99-133	LG 542
1737252BMA	599-133*	LG 422
1737252BMA	96-133*	LG 422
1737252BMA	99-133	LG 542
1737252BZ	599-133*	LG 422
1737252BZ	96-133*	LG 422
1737252BZ	99-133	LG 542
1737252BZYP	599-133*	LG 422
1737252BZYP	96-133*	LG 422
1737252BZYP	99-133	LG 542
1737252YP	599-133*	LG 422

X

* OREGON® Gator™ replacement blade

2019 OEM X-Reference

OEM No.	OREGON	Page
SNAPPER		
1737252YP	96-133*	LG 422
1737252YP	99-133	LG 542
1737816	391-605*	LG 544
1737816	91-605	LG 544
1737816BM	391-605*	LG 544
1737816BM	91-605	LG 544
1737816BMA	391-605*	LG 544
1737816BMA	91-605	LG 544
1737816BMYP	391-605*	LG 544
1737816BMYP	91-605	LG 544
1737816BZ	391-605*	LG 544
1737816BZ	91-605	LG 544
1737816SM	391-605*	LG 544
1737816SM	91-605	LG 544
1737816YP	391-605*	LG 544
1737816YP	91-605	LG 544
1739889	599-132*	LG 522
1739889A	599-132*	LG 522
1739889AYP	599-132*	LG 522
1739889BM	599-132*	LG 522
1739889BMA	599-132*	LG 522
1739889BZ	99-132	LG 539
175303	391-614*	LG 548
175303YP	391-614*	LG 548
1-7536	48-148	LG 695
1756152SYP	396-726*	LG 391
1756152SYP	596-344*	LG 495
1756152SYP	91-256	LG 437
1756152SYP	96-344*	LG 536
1757303	391-606*	LG 547
1757303	91-606	LG 509
1757303BM	391-606*	LG 547
1757303BM	91-606	LG 509
1757303YP	391-606*	LG 547
1757303YP	91-606	LG 509
1758878BMYP	391-607*	LG 511
1758878BMYP	91-607	LG 544
1759055	391-614*	LG 548
1759055YP	391-614*	LG 548
17736	44-500	LG 840
1-7817	33-024	LG 945
179889BZ	599-132*	LG 522
18069	96-630*	LG 556
18069	99-112	LG 556
1-8069	99-112	LG 556
1-8177	86-008	LG 782
18188	60-188	LG 718
1-8188	60-188	LG 718
1-8189	72-117	LG 1036
1-8198	35-016	LG 809
18201	60-201	LG 718
1-8201	60-201	LG 718
1-8228	72-410	LG 1030
18236	75-073	LG 319
1-8236	175-073	LG 319
1-8236	75-073	LG 319
1-8274	34-043	LG 823
1-8288	34-034	LG 821
1-8315	45-206	LG 231
18353	60-353	LG 719
1-8353	60-353	LG 719
18486	60-353	LG 719
1-8486	60-353	LG 719
1-8555	81-101	
18585	78-021	LG 832
1-8585	34-007	LG 826
1-8585	78-110	LG 833
1-8587	44-347	LG 840
18604	33-334	LG 730
1-8604	33-334	LG 730
18637	73-013	LG 849
1-8637	73-013	LG 849
1-8673	73-013	LG 849
18764	73-013	LG 849
1-8764	73-013	LG 849
1-8767	45-208	LG 245
1-8786	45-208	LG 245
1-8816	33-391	LG 945
18817	33-330	LG 729
18817	33-331	LG 730
18817	33-335	LG 730
18817	33-337	LG 730
1-8817	33-330	LG 729
1-8817	33-335	LG 730
18889	60-353	LG 719
1-8889	60-353	LG 719
1-9078	78-031	LG 826
19125	45-220	LG 232
1-9125	45-220	LG 232
19175	60-786	LG 719
1-9175	60-786	LG 719
1-9250	86-029	LG 782
1-9251	86-008	LG 782
19254	60-240	LG 719
1-9254	60-240	LG 719
1-9383	44-500	LG 840
19515	596-628*	LG 528
19515	96-628*	LG 528
19515	99-113	LG 528
1-9515	99-113	LG 528
19523	96-633*	LG 556
19523	99-117	LG 556
1-9523	99-117	LG 556
19544	33-332	LG 730
1-9544	33-332	LG 730
1-9545	33-384	LG 947
1-9645	99-103	LG 551
1-9645	99-107	LG 551
1-9702	99-103	LG 551
1-9702	99-107	LG 551
1-9702	99-121	LG 551
1-9710	99-103	LG 551
1-9710	99-107	LG 551
1-9710	99-121	LG 551
19795	96-620*	LG 551
19795	99-107	LG 551
1-9795	99-107	LG 551
2108202SM	45-295	LG 232
2-1707	78-690	LG 840
2-1742	85-011	LG 909
2-1745	41-005	LG 728
22252	75-073	LG 319
2-2252	75-073	LG 319
2233126	45-209	LG 246
22796	72-109	LG 1037
2-2796	72-109	LG 1037
22801	72-442	LG 1037
2-2886	33-026	LG 947
2-3355	33-028	LG 947
2-3364	51-001-0	LG 727
23416	15-744	LG 317
2343032	45-206	LG 231
2-3735	81-010	
2-3744	41-005	LG 728
23966	78-110	LG 833
24466	99-614*	LG 551
2-4479	75-105	LG 319
2448587	33-334	LG 730
2448587	33-335	LG 730
2448587	33-336	LG 730
24497	15-746	LG 317
2-4497	15-746	LG 317
2-4521	44-500	LG 840
24618	15-748	LG 317
24619	73-044	LG 849
2-4619	73-044	LG 849
24891	75-219	LG 319
2-4891	75-219	LG 319
2508122	45-208	LG 245
2526385	33-330	LG 729
2526385	33-331	LG 730
2526385	33-335	LG 730
2526385	33-337	LG 730
2572525	72-701	LG 1044
26305	15-749	LG 317
26343	33-397	LG 942
2-6343	33-397	LG 942
26691	96-620*	LG 551
26691	99-103	LG 551
2-6691	99-103	LG 551
2-6691	99-107	LG 551
2-6691	99-121	LG 551
26693	45-000	LG 237
26693	45-010	LG 238
2-6693	45-000	LG 237
2-6693	45-010	LG 238
2-7164	83-012	LG 819
2-7225	33-027	LG 947
27346	15-750	LG 317
27347	15-751	LG 317
28014	45-209	LG 246
2-8014	45-209	LG 246
28051	15-753	LG 317
28425	73-044	LG 849
28427	73-013	LG 849
2-8427	73-013	LG 849
28542	33-002	LG 946
2-8542	33-002	LG 946
2-9025	05-060	LG 914
29101	15-756	LG 317
29604	75-727	LG 319
2-9604	75-727	LG 319
29641	15-760	LG 317
29907	15-761	LG 317
302030	82-306	LG 874
303044	45-030	LG 245
310	55-820	LG 935
311	55-820	LG 935
3-1724	79-724	LG 556
3-1777	60-991	LG 718
32127	73-027	LG 850
3-5520	33-121	LG 734
35710	15-762	LG 317
3-5727	72-450	LG 1037
36006N	82-306	LG 874
362024	82-306	LG 874
363194	45-030	LG 245
36585	15-763	LG 318
376567	45-205	LG 228
3-7723	79-728	LG 556
37982	73-027	LG 850
3-7982	73-027	LG 850
394358	07-101	LG 775
394358	07-102	LG 774
394358S	07-101	LG 775
394358S	07-102	LG 774
42005	55-820	LG 935
4-2005	55-820	LG 935
42074	05-072	LG 1023
4-2074	05-072	LG 1023
42076	55-803	LG 1022
4-2076	55-803	LG 1022
42110	55-120	LG 770
42110	55-123	LG 770
4-2110	55-120	LG 770
4-2110	55-123	LG 770
4-2241	55-334	LG 633
4-2310	49-020	LG 631
42735	15-764	LG 318
42813	15-765	LG 318
42998	99-614*	LG 551
43844	15-766	LG 318
44637	15-767	LG 318
4-4785	85-011	LG 909
4-6095	55-342	LG 627
4-6110	49-021	LG 629
4-6120	55-333	LG 633
4-6555	45-227	LG 234
5021357X1	83-011	LG 819
5022182	33-026	LG 947
5023256	15-768	LG 318
5023256SM	15-768	LG 318
50473	45-295	LG 232
5-0618	72-728	LG 1044
5-0618	72-729	LG 1044
5-0711	86-005	LG 782
50918	45-107	LG 245
5-0918	15-107	LG 273
5-0918	45-107	LG 245
5100881	15-768	LG 318
5101756S	396-726*	LG 391
5101756S	596-344*	LG 495
5101756S	91-312	LG 478
5101756S	96-344*	LG 536
5101756SYP	396-726*	LG 391
5101756SYP	596-344*	LG 495
5101756SYP	91-312	LG 478
5101756SYP	96-344*	LG 536
5101756X2	396-726*	LG 391
5101756X2	596-344*	LG 495
5101756X2	91-312	LG 478
5101756X2	96-344*	LG 536
5101986	396-716*	LG 451
5101986	596-310*	LG 447
5101986	91-313	LG 494
5101986	96-310*	LG 444
5101986BM	396-716*	LG 451
5101986BM	596-310*	LG 447
5101986BM	91-313	LG 494
5101986BM	96-310*	LG 444
5101986BMYP	396-716*	LG 451
5101986BMYP	596-310*	LG 447
5101986BMYP	91-313	LG 494
5101986BMYP	96-310*	LG 444
5101986S	396-716*	LG 451
5101986S	596-310*	LG 447
5101986S	91-313	LG 494
5101986S	96-310*	LG 444
5101986SYP	396-716*	LG 451
5101986SYP	596-310*	LG 447
5101986SYP	91-313	LG 494
5101986SYP	96-310*	LG 444
5101986YP	396-716*	LG 451
5101986YP	596-310*	LG 447
5101986YP	91-313	LG 494
5101986YP	96-310*	LG 444
5102227S	396-731*	LG 427
5102227S	91-609	LG 469
5103303S	396-716*	LG 451
5103303S	596-310*	LG 447
5103303S	91-368	LG 460
5103303S	96-310*	LG 444
5103303SX2	396-716*	LG 451
5103303SX2	596-310*	LG 447
5103303SX2	91-368	LG 460
5103303SX2	96-310*	LG 444
5103303SYP	396-716*	LG 451
5103303SYP	596-310*	LG 447
5103303SYP	91-368	LG 460
5103303SYP	96-310*	LG 444
5103304S	396-726*	LG 391
5103304S	596-344*	LG 495
5103304S	91-335	LG 420
5103304S	96-344*	LG 536
5103304SYP	396-726*	LG 391
5103304SYP	596-344*	LG 495
5103304SYP	91-335	LG 420
5103304SYP	96-344*	LG 536
5103304X2	396-726*	LG 391

X

* OREGON® Gator™ replacement blade

SNAPPER

OEM No.	OREGON	Page
5103304X2	596-344*	LG 495
5103304X2	91-335	LG 420
5103304X2	96-344*	LG 536
5103305S	396-727*	LG 467
5103305S	596-347*	LG 448
5103305S	96-347*	LG 387
5104045SYP	396-727*	LG 467
5104045SYP	596-347*	LG 448
5104045SYP	91-308	LG 467
5104045SYP	96-347*	LG 387
5-1460	51-011	LG 727
5-1616	51-011	LG 727
519012	45-083	LG 246
5-1996	35-033	LG 809
5-2267	72-728	LG 1044
5-2267	72-729	LG 1044
5-3103	76-002	LG 726
5-3103	76-014	LG 726
5-3217	51-000	LG 727
5-3225	51-000	LG 727
5-3740	33-112	LG 735
539118672	599-133*	LG 422
539118672	96-133*	LG 422
539118673	599-133*	LG 422
539118673	96-133*	LG 422
5-4073	45-295	LG 232
552188	82-306	LG 874
5-7423	76-014	LG 726
5-7444	51-000	LG 727
5-7582	78-641	LG 835
58925	33-121	LG 734
5-8925	33-121	LG 734
5-9759	82-306	LG 874
5-9964	82-307-0	LG 874
60631	73-001	LG 847
6-0631	73-001	LG 847
6-0710	51-000	LG 727
6-0710	51-222	LG 727
60916	60-786	LG 719
6-0916	60-786	LG 719
61215	73-043	LG 847
6-1215	73-043	LG 847
6-1275	51-222	LG 727
6-1276	51-011	LG 727
62465	15-769	LG 318
68049	55-803	LG 1022
7010061	80-036	LG 727
7010210	80-014	LG 727
7010211	02-535	
7010525	71-800	LG 956
7010570	45-000	LG 237
7010570	45-010	LG 238
7010696	45-295	LG 232
7010743	45-083	LG 246
7010745	45-104	LG 939
7010749	75-068	LG 318
7010749YP	75-068	LG 318
7010765	76-067-0	LG 726
7010787	44-347	LG 840
7010821	71-276	LG 956
7010821	71-400	LG 956
7010948	34-002	LG 821
7010953	45-000	LG 237
7010986	45-081	LG 249
7010986YP	45-081	LG 249
7011024	45-110	LG 245
7011029	34-038	LG 821
7011035	80-745	LG 728
7011048	48-206	LG 246
7011048YP	48-206	LG 246
70110765	76-067-0	LG 726
7011082	72-450	LG 1037
7011083	72-450	LG 1037
7011083	72-510	LG 1036
7011100	45-083	LG 246
7011117	75-059	LG 318
7011117YP	75-059	LG 318
7011130	60-061	LG 718
7011138	42-008	LG 945
7011155	33-387	LG 945
7011155YP	33-387	LG 945
7011709	02-103	LG 722
7011807	45-000	LG 237
7011807	45-010	LG 238
7011807	45-034	LG 224
7011807YP	45-000	LG 237
7011807YP	45-010	LG 238
7011853	33-390	
7011885	45-209	LG 246
7011887	75-508	LG 319
7011991	60-991	LG 718
7012061	60-061	LG 718
7012061YP	60-061	LG 718
7012122	05-061	LG 914
7012124	34-021	LG 833
7012124YP	34-021	LG 833
7012304	45-209	LG 246
7012337	07-392	LG 767
7012345	72-442	LG 1037
7012347	72-510	LG 1036
7012348	72-442	LG 1037
7012348	72-450	LG 1037
7012350	80-014	LG 727
7012353	75-353	LG 319
7012353YP	75-353	LG 319
7012354	75-354	LG 319
7012354YP	75-354	LG 319
7012425	46-024	LG 719
7012425YP	46-024	LG 719
7012496	72-442	LG 1037
7012508	75-508	LG 319
7012508YP	75-508	LG 319
7012515	07-308	LG 772
7012579	72-109	LG 1037
7012603	72-109	LG 1037
7012603YP	72-109	LG 1037
7012623	33-021	LG 950
7012623YP	33-021	LG 950
7012757	80-014	LG 727
7012830	80-036	LG 727
7012927	65-229	LG 342
7013313	45-295	LG 232
7013313SM	45-295	LG 232
7013321	45-083	LG 246
7013321YP	45-083	LG 246
7013850	34-005	LG 821
7013865	80-740	LG 852
7013938	15-756	LG 317
7014033	02-535	
7014036BMI	396-716*	LG 451
7014036BMI	596-310*	LG 447
7014036BMI	96-310*	LG 444
7014036BMI	99-127	LG 375
7014036BMYP	396-716*	LG 451
7014036BMYP	596-310*	LG 447
7014036BMYP	96-310*	LG 444
7014036BMYP	99-127	LG 375
7014036YP	396-716*	LG 451
7014036YP	596-310*	LG 447
7014036YP	96-310*	LG 444
7014036YP	99-127	LG 375
7014208	34-031	LG 821
7014340	34-003	LG 821
7014359	07-101	LG 775
7014359	07-102	LG 774
7014398	15-739	LG 316
7014398YP	15-739	LG 316
7014483	45-057	LG 249
7014514	45-242	LG 243
7014514YP	45-242	LG 243
7014523	49-018	LG 728
7014525	75-105	LG 319
7014604	72-442	LG 1037
7014604	72-450	LG 1037
7014604YP	72-442	LG 1037
7014799	15-740	LG 316
7014799YP	15-740	LG 316
7014800	15-741	LG 317
7014800YP	15-741	LG 317
7015257YP	80-016	LG 853
7015474	45-000	LG 237
7016325	07-406	LG 767
7016980	596-628*	LG 528
7016980	96-628*	LG 528
7016980BMA	596-628*	LG 528
7016980BMA	96-628*	LG 528
7016980BZ	596-628*	LG 528
7016980BZ	96-628*	LG 528
7016980BZYP	596-628*	LG 528
7016980BZYP	96-628*	LG 528
7016982	96-633*	LG 556
7016982BMA	96-633*	LG 556
7016982BZ	96-633*	LG 556
7017002	96-620*	LG 551
7017002	99-103	LG 551
7017036	91-180	LG 460
7017036	99-127	LG 375
7017036BM	396-716*	LG 451
7017036BM	596-310*	LG 447
7017036BM	96-310*	LG 444
7017036BM	99-127	LG 375
7017036BMI	396-716*	LG 451
7017036BMI	596-310*	LG 447
7017036BMI	96-310*	LG 444
7017036BMI	99-127	LG 375
7017036BMYP	91-180	LG 460
7017036BMYP	99-127	LG 375
7017036YP	91-180	LG 460
7017036YP	99-127	LG 375
7017037	396-726*	LG 391
7017037	596-344*	LG 495
7017037	91-181	LG 495
7017037	96-344*	LG 536
7017043	396-735*	LG 452
7017043	596-308*	LG 548
7017043	96-308*	LG 456
7017043	99-126	LG 501
7017043YP	396-735*	LG 452
7017043YP	596-308*	LG 548
7017043YP	96-308*	LG 456
7017043YP	99-126	LG 501
7017053	15-742	LG 317
7017053YP	15-742	LG 317
7017063	33-114	LG 734
7017081	396-727*	LG 467
7017081	596-347*	LG 448
7017081	91-308	LG 467
7017081	96-347*	LG 387
7017086	96-620*	LG 551
7017086	99-121	LG 551
7017168	96-620*	LG 551
7017168	99-121	LG 551
7017736	44-500	LG 840
7017817	33-024	LG 945
7017817	33-397	LG 942
7017817YP	33-024	LG 945
7017817YP	33-397	LG 942
7018069	96-630*	LG 556
7018069	99-112	LG 556
7018069BMA	96-630*	LG 556
7018069BMA	99-112	LG 556
7018069BZ	96-630*	LG 556
7018069BZ	99-112	LG 556
7018069BZYP	96-630*	LG 556
7018069BZYP	99-112	LG 556
7018188	60-188	LG 718
7018189	72-117	LG 1036
7018198	35-016	LG 809
7018201	60-201	LG 718
7018201YP	60-201	LG 718
7018228	72-410	LG 1030
7018236	75-073	LG 319
7018274	34-043	LG 823
7018288	34-034	LG 821
7018353	60-353	LG 719
7018486	60-353	LG 719
7018486YP	60-353	LG 719
7018604	33-334	LG 730
7018604	33-335	LG 730
7018604	33-336	LG 730
7018637	73-013	LG 849
7018764	73-013	LG 849
7018766	45-208	LG 245
7018781	44-347	LG 840
7018782	76-067-0	LG 726
7018782SM	76-067-0	LG 726
7018816	33-391	LG 945
7018816YP	33-391	LG 945
7018817	33-330	LG 729
7018817	33-331	LG 730
7018817	33-337	LG 730
7018889	60-353	LG 719
7018889YP	60-353	LG 719
7019078	78-031	LG 826
7019125	45-220	LG 232
7019175	60-786	LG 719
7019175YP	60-786	LG 719
7019250	86-029	LG 782
7019254	60-240	LG 719
7019254YP	60-240	LG 719
7019294	60-240	LG 719
7019515	596-628*	LG 528
7019515	96-628*	LG 528
7019515	99-113	LG 528
7019515BMA	596-628*	LG 528
7019515BMA	96-628*	LG 528
7019515BMA	99-113	LG 528
7019515BZ	596-628*	LG 528
7019515BZ	96-628*	LG 528
7019515BZ	99-113	LG 528
7019515BZYP	596-628*	LG 528
7019515BZYP	96-628*	LG 528
7019515BZYP	99-113	LG 528
7019523	96-633*	LG 556
7019523	99-117	LG 556
7019523BMA	96-633*	LG 556
7019523BMA	99-117	LG 556
7019523BZ	96-633*	LG 556
7019523BZ	99-117	LG 556
7019523BZYP	96-633*	LG 556
7019523BZYP	99-117	LG 556
7019523YP	96-633*	LG 556
7019523YP	99-117	LG 556
7019544	33-332	LG 730
7019545	33-384	LG 947
7019545YP	33-384	LG 947
7019645	99-103	LG 551
7019702	99-103	LG 551
7019710	99-103	LG 551
7019795	99-107	LG 551
7019795BMA	96-620*	LG 551
7019795BMA	96-620*	LG 551
7019795BMA	99-103	LG 551
7019795BMA	99-107	LG 551
7019795BMA	99-107	LG 551
7019795BMA	99-121	LG 551
7019795BZ	96-620*	LG 551
7019795BZ	99-107	LG 551
7019795BZYP	96-620*	LG 551

X

* OREGON® Gator™ replacement blade

2019 OEM X-Reference

OEM No.	OREGON	Page
SNAPPER		
7019795BZYP	99-107	LG 551
7019795YP	96-620*	LG 551
7019795YP	99-107	LG 551
7022252	75-073	LG 319
7022252YP	75-073	LG 319
7022541	15-761	LG 317
7022796	72-109	LG 1037
7022797	33-118-1	LG 733
7022801	72-442	LG 1037
7022886	33-026	LG 947
7022886YP	33-026	LG 947
7023355	33-028	LG 947
7023364	51-001-0	LG 727
7023416	15-744	LG 317
7023416YP	15-744	LG 317
7023735	81-010	
7023966	78-110	LG 833
70239667	78-110	LG 833
7023966YP	78-110	LG 833
7024466	99-614*	LG 551
7024497	15-746	LG 317
7024497	75-105	LG 319
7024497YP	15-746	LG 317
7024497YP	75-105	LG 319
7024511	15-761	LG 317
7024521	44-500	LG 840
7024521YP	44-500	LG 840
7024618	15-748	LG 317
7024618YP	15-748	LG 317
7024619	73-044	LG 849
7024741	96-633*	LG 556
7024741A	96-633*	LG 556
7024741AYP	96-633*	LG 556
7024741BMA	96-633*	LG 556
7024741BZ	96-633*	LG 556
7024819	86-008	LG 782
7024891	75-219	LG 319
7024891YP	75-219	LG 319
7025042	15-760	LG 317
7026305	15-749	LG 317
7026305YP	15-749	LG 317
7026343	33-397	LG 942
7026343SM	33-397	LG 942
7026407	96-620*	LG 551
7026407	99-121	LG 551
7026407AYP	96-620*	LG 551
7026407AYP	99-121	LG 551
7026428	98-102*	LG 410
7026428BMA	98-102*	LG 410
7026428BZ	98-102*	LG 410
7026428BZYP	98-102*	LG 410
7026453	596-628*	LG 528
7026453	96-628*	LG 528
7026565	96-630*	LG 556
7026565BM	96-630*	LG 556
7026565BMA	96-630*	LG 556
7026565BZ	96-630*	LG 556
7026565BZYP	96-630*	LG 556
7026565YP	96-630*	LG 556
7026691	96-620*	LG 551
7026691	99-103	LG 551
7026691BZYP	96-620*	LG 551
7026691BZYP	99-103	LG 551
7026691YP	99-103	LG 551
7026693	45-000	LG 237
7026693	45-010	LG 238
7026693YP	45-000	LG 237
702669BMA	96-620*	LG 551
702669BMA	99-103	LG 551
702669BZ	96-620*	LG 551
702669BZ	99-103	LG 551
702669YP	96-620*	LG 551
702669YP	99-103	LG 551
7027225	33-027	LG 947
7027225YP	33-027	LG 947
7027346	15-750	LG 317
7027346YP	15-750	LG 317
7027347	15-751	LG 317
7027347YP	15-751	LG 317
7028014	45-209	LG 246
7028014YP	45-209	LG 246
7028051	15-753	LG 317
7028334SM	15-753	LG 317
7028425	73-044	LG 849
7028427	73-013	LG 849
7028427YP	73-013	LG 849
7028524	96-620*	LG 551
7028524	99-103	LG 551
7028542	33-002	LG 946
7028542YP	33-002	LG 946
7028619	15-767	LG 318
7028722	45-000	LG 237
7028722YP	45-000	LG 237
7029025	05-060	LG 914
7029101	15-756	LG 317
7029101YP	15-756	LG 317
7029255	15-762	LG 317
7029269	15-764	LG 318
7029604	75-727	LG 319
7029604YP	75-727	LG 319
7029641	15-760	LG 317
7029641YP	15-760	LG 317
7029907	15-761	LG 317
7029907YP	15-761	LG 317
7032127	73-027	LG 850
703371	198-049	LG 518
703371	598-631*	LG 390
703371	98-631*	LG 390
7034168	96-633*	LG 556
7034168BMA	96-633*	LG 556
7034168BZ	96-633*	LG 556
7034168BZYP	96-633*	LG 556
7034185YP	96-633*	LG 556
7035635	596-628*	LG 528
7035635	96-628*	LG 528
7035710	15-762	LG 317
7035710YP	15-762	LG 317
7035727	72-450	LG 1037
7035727YP	72-450	LG 1037
7035947	73-044	LG 849
7035947YP	73-044	LG 849
7036585	15-763	LG 318
7037982	73-027	LG 850
7037982YP	73-027	LG 850
7041939	96-620*	LG 551
7041939	99-121	LG 551
7041939BMA	96-620*	LG 551
7041939BMA	99-121	LG 551
7041939BZ	96-620*	LG 551
7041939BZ	99-121	LG 551
7041939BZYP	96-620*	LG 551
7041939BZYP	99-121	LG 551
7042074	05-072	LG 1023
7042074YP	05-072	LG 1023
7042076	55-803	LG 1022
7042110	55-120	LG 770
7042110YP	55-120	LG 770
7042735	15-764	LG 318
7042735YP	15-764	LG 318
7042813	15-765	LG 318
7042813YP	15-765	LG 318
7042998	99-614*	LG 551
7042998BMA	99-614*	LG 551
7042998BZ	99-614*	LG 551
7042998BZYP	99-614*	LG 551
7043844	15-766	LG 318
7043844YP	15-766	LG 318
704425	195-070	LG 469
704425	596-370*	LG 427
704425	96-370*	LG 533
704429	195-032	LG 425
704429	596-900*	LG 380
704429	96-900*	LG 526
7044637	15-767	LG 318
7044637YP	15-767	LG 318
7044785	85-011	LG 909
7046555	45-227	LG 234
7046555YP	45-227	LG 234
7046625	396-731*	LG 427
7046625BM	396-731*	LG 427
7046625BMYP	396-731*	LG 427
7046625YP	396-731*	LG 427
7046983	45-208	LG 245
7050618	72-728	LG 1044
7050618	72-729	LG 1044
7050711	86-005	LG 782
7050918	45-107	LG 245
7050918YP	45-107	LG 245
7051746	45-107	LG 245
7051996	35-033	LG 809
7052267	72-728	LG 1044
7052267	72-729	LG 1044
7052268	72-728	LG 1044
7052268	72-729	LG 1044
7052305	72-728	LG 1044
7052305	72-729	LG 1044
7053103	76-014	LG 726
7053740	33-112	LG 735
7058925	33-121	LG 734
7058925YP	33-121	LG 734
7059964	82-307-0	LG 874
7060631	73-001	LG 847
7060631YP	73-001	LG 847
7060631YP	80-740	LG 852
7060916	60-786	LG 719
7061215	73-043	LG 847
7061215YP	73-043	LG 847
7061275	51-000	LG 727
7061275	51-222	LG 727
7061276	51-011	LG 727
7062465	15-769	LG 318
7062465YP	15-769	LG 318
7068049	55-803	LG 1022
7068049YP	55-803	LG 1022
7070295	45-107	LG 245
7072684	33-379	LG 945
7072684YP	33-379	LG 945
7073390	51-000	LG 727
7073396	396-727*	LG 467
7073396	596-347*	LG 448
7073396	91-308	LG 467
7073396	96-347*	LG 387
7073396YP	396-727*	LG 467
7073396YP	596-347*	LG 448
7073396YP	91-308	LG 467
7073396YP	96-347*	LG 387
7074426	86-010	LG 782
7074453	35-050	LG 809
7074810	48-145	LG 698
7075115	81-101	
7075115	81-102	LG 805
7075235YP	15-763	LG 318
7075622	33-334	LG 730
7075622	33-335	LG 730
7075622	33-336	LG 730
7075622SM	33-334	LG 730
7075622SM	33-335	LG 730
7075622SM	33-336	LG 730
7075671	33-330	LG 729
7075671	33-331	LG 730
7075671	33-335	LG 730
7075671	33-337	LG 730
7075671YP	33-330	LG 729
7075671YP	33-331	LG 730
7075671YP	33-337	LG 730
7075691YP	33-331	LG 730
7075691YP	33-337	LG 730
7075751	396-726*	LG 391
7075751	596-344*	LG 495
7075751	91-181	LG 495
7075751	96-344*	LG 536
7075751BMA	396-726*	LG 391
7075751BMA	596-344*	LG 495
7075751BMA	91-181	LG 495
7075751BMA	96-344*	LG 536
7075751BZ	396-726*	LG 391
7075751BZ	596-344*	LG 495
7075751BZ	91-181	LG 495
7075751BZ	96-344*	LG 536
7075751BZYP	396-726*	LG 391
7075751BZYP	596-344*	LG 495
7075751BZYP	91-181	LG 495
7075751BZYP	96-344*	LG 536
7075770	396-727*	LG 467
7075770	596-347*	LG 448
7075770	91-308	LG 467
7075770	96-347*	LG 387
7075770BMA	396-727*	LG 467
7075770BMA	596-347*	LG 448
7075770BMA	91-308	LG 467
7075770BMA	96-347*	LG 387
7075770BZ	396-727*	LG 467
7075770BZ	596-347*	LG 448
7075770BZ	91-308	LG 467
7075770BZ	96-347*	LG 387
7075770YP	396-727*	LG 467
7075770YP	596-347*	LG 448
7075770YP	91-308	LG 467
7075770YP	96-347*	LG 387
7075771	396-735*	LG 452
7075771	596-308*	LG 548
7075771	96-308*	LG 456
7075771	99-126	LG 501
7075771BMA	396-735*	LG 452
7075771BMA	596-308*	LG 548
7075771BMA	96-308*	LG 456
7075771BMA	99-126	LG 501
7075771BZ	396-735*	LG 452
7075771BZ	596-308*	LG 548
7075771BZ	96-308*	LG 456
7075771BZ	99-126	LG 501
7075771BZYP	396-735*	LG 452
7075771BZYP	596-308*	LG 548
7075771BZYP	96-308*	LG 456
7075771BZYP	99-126	LG 501
7076065	60-408	LG 700
70761215	73-043	LG 847
7076384	33-379	LG 945
7076399	45-030	LG 245
7076399	45-127	LG 244
7076436	09-802	LG 233
7076439	43-075	
7076450	396-726*	LG 391
7076450	596-344*	LG 495
7076450	91-181	LG 495
7076450	96-344*	LG 536
7076486	02-188	LG 676
7076496	75-036	LG 297
7076496YP	75-036	LG 297
7076497	75-221	LG 280
7076497YP	75-221	LG 280
7076498	75-240	LG 297
7076500	34-024	LG 822
7076504	48-211	LG 233
7076514	45-030	LG 245
7076514	45-127	LG 244
7076514YP	45-030	LG 245
7076514YP	45-127	LG 244
7076515	45-078	LG 230

X

* OREGON® Gator™ replacement blade

SNAPPER

OEM No.	OREGON	Page
7076520	34-023	LG 822
7076520	78-031	LG 826
707652070	78-031	LG 826
7076520YP	78-031	LG 826
7076572	07-100	LG 774
7076675	396-716*	LG 451
7076675	596-310*	LG 447
7076675	91-180	LG 460
7076675	96-310*	LG 444
7076677	75-058	LG 255
7076677YP	75-058	LG 255
7076680	75-058	LG 255
7076680	75-240	LG 297
7076680YP	75-240	LG 297
7076688	34-007	LG 826
7076688	34-024	LG 822
7076688	78-021	LG 832
7076822	33-397	LG 942
7077288	69-282	LG 817
7077288	83-282	LG 817
7077288	83-402	LG 817
7077322	45-242	LG 243
7077324	45-242	LG 243
7077328	45-242	LG 243
7077344	396-726*	LG 391
7077344	596-344*	LG 495
7077344	91-181	LG 495
7077344	96-344*	LG 536
7077377	396-716*	LG 451
7077377	596-310*	LG 447
7077377	96-310*	LG 444
7077377	99-127	LG 375
7077378	91-180	LG 460
7077378	99-127	LG 375
7077855	78-020	LG 825
7079181	15-771	LG 318
7079181YP	15-771	LG 318
7079197	33-118-1	LG 733
7079201	33-397	LG 942
7079215	396-713 *	LG 577
7079215	91-557	LG 545
7079215	96-343*	LG 395
7079221	396-713 *	LG 577
7079221	91-557	LG 545
7079221	96-343*	LG 395
7079221BM	396-713 *	LG 577
7079221BM	91-557	LG 545
7079221BM	96-343*	LG 395
7079221YP	396-713 *	LG 577
7079221YP	91-557	LG 545
7079221YP	96-343*	LG 395
7079222	91-127	LG 396
7079222	99-615*	LG 552
7079369	91-126	LG 548
7079369	99-617*	LG 395
7079369BM	91-126	LG 548
7079369BM	99-617*	LG 395
7079369YP	91-126	LG 548
7079369YP	99-617*	LG 395
7079371	91-128	LG 424
7079371	99-615*	LG 552
7079371BM	91-128	LG 424
7079371BM	99-615*	LG 552
7079371BMYP	91-128	LG 424
7079371BMYP	99-615*	LG 552
7079371YP	91-128	LG 424
7079371YP	99-615*	LG 552
7079388	91-123	LG 395
7079388	99-617*	LG 395
7079446	33-118-1	LG 733
7079776	15-773	LG 318
7079776YP	15-773	LG 318
7079779	15-774	LG 318
7079779YP	15-774	LG 318
7079781	15-776	LG 318
7079781YP	15-776	LG 318
7079813	45-227	LG 234
7091550	80-740	LG 852
7100242	99-119	LG 489
7100242A	99-119	LG 489
7100242AYP	99-119	LG 489
7100242BM	99-119	LG 489
7100242BMA	99-119	LG 489
7100242BZ	99-119	LG 489
7100242BZYP	99-119	LG 489
7100242ZZZZ	99-119	LG 489
7100851	99-134	LG 527
7100851A	99-134	LG 527
7100851AYP	99-134	LG 527
7100851BM	99-134	LG 527
7100851BMA	99-134	LG 527
7100851BMYP	99-134	LG 527
7100851BZ	99-134	LG 527
7103288	591-611*	LG 527
7103288	91-611	LG 527
7103288BM	591-611*	LG 527
7103288BM	91-611	LG 527
7103288BMA	591-611*	LG 527
7103288BMA	91-611	LG 527
7103288BZ	591-611*	LG 527
7103288BZ	91-611	LG 527
7103288YP	591-611*	LG 527
7103288YP	91-611	LG 527
71040383	596-628*	LG 528
71040383	96-628*	LG 528
71040383BM	596-628*	LG 528
71040383BM	96-628*	LG 528
71040383BZYP	596-628*	LG 528
71040383BZYP	96-628*	LG 528
7104083BMA	596-628*	LG 528
7104083BMA	96-628*	LG 528
7104083BZ	596-628*	LG 528
7104083BZ	96-628*	LG 528
7104083BZYP	596-628*	LG 528
7104083BZYP	96-628*	LG 528
7104196	596-628*	LG 528
7104196	96-628*	LG 528
7104196	99-131	LG 555
7104196BM	596-628*	LG 528
7104196BM	96-628*	LG 528
7104196BM	99-131	LG 555
7104196BMA	596-628*	LG 528
7104196BMA	96-628*	LG 528
7104196BMA	99-131	LG 555
7104196BZ	596-628*	LG 528
7104196BZ	96-628*	LG 528
7104196BZ	99-131	LG 555
7104196BZYP	596-628*	LG 528
7104196BZYP	96-628*	LG 528
7104196BZYP	99-131	LG 555
7104196YP	596-628*	LG 528
7104196YP	96-628*	LG 528
7104196YP	99-131	LG 555
721865	99-134	LG 527
7-2623	33-021	LG 950
72684	33-379	LG 945
7-2684	33-379	LG 945
7-4453	35-050	LG 809
75671	33-330	LG 729
75671	33-331	LG 730
75671	33-337	LG 730
75770	396-727*	LG 467
75770	596-347*	LG 448
75770	91-308	LG 467
75770	96-347*	LG 387
76065	60-408	LG 700
76379	82-306	LG 874
7-6379	82-306	LG 874
76398	78-640	LG 835
76400	48-205	LG 694
76436	09-802	LG 233
76439	43-075	
76450	396-726*	LG 391
76450	596-344*	LG 495
76450	91-181	LG 495
76450	96-344*	LG 536
76486	02-188	LG 676
76496	75-036	LG 297
7-6496	75-036	LG 297
76497	75-221	LG 280
7-6497	75-221	LG 280
76498	75-240	LG 297
76500	34-024	LG 822
76500	78-021	LG 832
76504	48-211	LG 233
7-6504	48-211	LG 233
76510	45-220	LG 232
76514	45-030	LG 245
76514	45-127	LG 244
7-6514	45-030	LG 245
7-6514	45-127	LG 244
76515	45-078	LG 230
76520	34-023	LG 822
76520	78-031	LG 826
7-6520	78-031	LG 826
76520YP	78-031	LG 826
76572	07-100	LG 774
7-6572	07-100	LG 774
76645	82-307-0	LG 874
7-6645	82-307-0	LG 874
76675	396-716*	LG 451
76675	596-310*	LG 447
76675	91-180	LG 460
76675	96-310*	LG 444
7-6675	91-180	LG 460
76677	75-058	LG 255
7-6677	75-058	LG 255
76680	75-058	LG 255
76680	75-240	LG 297
7-6680	75-240	LG 297
76688	34-007	LG 826
76688	34-024	LG 822
7-6688	34-007	LG 826
77285	78-641	LG 835
7-7324	45-242	LG 243
77344	396-726*	LG 391
77344	596-344*	LG 495
77344	91-181	LG 495
77344	96-344*	LG 536
77355	83-282	LG 817
77355	83-402	LG 817
7-7355	69-282	LG 817
77377	91-180	LG 460
77377	99-127	LG 375
77378	91-180	LG 460
77378	99-127	LG 375
77717	35-012	LG 806
77855	78-020	LG 825
7-8767	45-208	LG 245
79181	15-771	LG 318
79197	33-118-1	LG 733
7-9197	33-118-1	LG 733
79215	396-713 *	LG 577
79215	91-557	LG 545
79215	96-343*	LG 395
79221	396-713 *	LG 577
79221	91-557	LG 545
79221	96-343*	LG 395
79222	91-127	LG 396
79222	99-615*	LG 552
7-9222	91-127	LG 396
79369	91-126	LG 548
79369	99-617*	LG 395
79371	91-128	LG 424
79371	99-615*	LG 552
7-9371	91-128	LG 424
79388	91-123	LG 395
79388	99-617*	LG 395
7-9388	91-123	LG 395
79389	92-150	LG 395
7-9446	33-118-1	LG 733
79776	15-773	LG 318
79779	15-774	LG 318
79781	15-776	LG 318
79813	45-227	LG 234
7-9813	45-227	LG 234
898133	07-101	LG 775
898133	07-102	LG 774
91550	80-740	LG 852
9-1550	80-740	LG 852
943424	45-057	LG 249

SOLO

OEM No.	OREGON	Page
05-10-552	49-021	LG 629
05-10-616	49-807	LG 611
05-10-802	49-812	LG 612

SOUTHERN STATES

OEM No.	OREGON	Page
754-0145	75-145	LG 300
754-0201	75-441	LG 334
754-0230	75-008	LG 301
754-0234	75-441	LG 334
754-0240	75-009	LG 301
754-0241	75-012	LG 301
754-0293	75-018	LG 301
954-0145	75-145	LG 300
954-0145A	75-145	LG 300
954-015A	75-145	LG 300
954-0201	75-441	LG 334
954-0230	75-008	LG 301
954-0234	75-441	LG 334
954-0240	75-009	LG 301
954-0241	75-012	LG 301
954-0241A	75-012	LG 301
954-0293	75-018	LG 301

SPARTAN

OEM No.	OREGON	Page
438-0002-00	396-702*	LG 480
438-0002-00	596-702*	LG 388
438-0002-00	93-011	LG 557

SPEIGEL

OEM No.	OREGON	Page
754-0151	75-004	LG 301
754-0935	75-092	LG 304
954-0151	75-004	LG 301
954-0935	75-092	LG 304

STAMBAUGH THOMPSON

OEM No.	OREGON	Page
754-0201	75-441	LG 334
754-0234	75-441	LG 334
754-0935	75-092	LG 304
954-0201	75-441	LG 334
954-0234	75-441	LG 334
954-0935	75-092	LG 304

STEINER

OEM No.	OREGON	Page
112111-01	593-600*	LG 385
112111-01	93-009	LG 476
112111-02	393-601*	LG 582
112111-02	593-601*	LG 386
112111-02	93-010	LG 432
112111-02	93-601*	LG 432
112111-03	396-702*	LG 480
112111-03	596-702*	LG 388
112111-03	93-011	LG 557
112111-03	96-702*	LG 491
79-035	396-739*	LG 479
79-035	91-188	LG 439
79-036	396-739*	LG 479

X

* OREGON® Gator™ replacement blade

2019 OEM X-Reference

OEM No.	OREGON	Page
STEINER		
79-037	391-731*	LG 558
79-038	391-731*	LG 558
79-050	396-739*	LG 479
79-068	391-731*	LG 558
79-068	91-731	LG 558
STERCHI BROS.		
754-0145	75-145	LG 300
754-0151	75-004	LG 301
754-0178	75-179	LG 310
754-0201	75-441	LG 334
754-0230	75-008	LG 301
754-0234	75-441	LG 334
754-0240	75-009	LG 301
754-0241	75-012	LG 301
754-0266	75-016	LG 301
754-0293	75-018	LG 301
754-0935	75-092	LG 304
STERCHI BROS.		
954-0145	75-145	LG 300
954-0145A	75-145	LG 300
954-0151	75-004	LG 301
954-015A	75-145	LG 300
954-0178	75-179	LG 310
954-0201	75-441	LG 334
954-0230	75-008	LG 301
954-0234	75-441	LG 334
954-0240	75-009	LG 301
954-0241	75-012	LG 301
954-0241A	75-012	LG 301
954-0266	75-016	LG 301
954-0266A	75-016	LG 301
954-0293	75-018	LG 301
954-0935	75-092	LG 304
STERLING STORES		
754-0151	75-004	LG 301
754-0201	75-441	LG 334
754-0234	75-441	LG 334
954-0151	75-004	LG 301
954-0201	75-441	LG 334
954-0234	75-441	LG 334
STIHL		
000 350 3503	07-109	LG 778
0000 120 1653	30-853	LG 213
0000 120 1654	30-853	LG 213
0000 350 0510	56-018	LG 690
0000 350 0512	56-018	LG 690
0000 350 0520	56-019	LG 772
0000 350 0522	56-019	LG 772
0000 350 3500	07-109	LG 778
0000 350 3500	07-217	LG 778
0000 350 3502	07-217	LG 778
0000 350 3503	07-217	LG 778
0000 350 3506	07-133	LG 778
0000 400 1300	33-244	LG 786
0000 400 1306	33-243	LG 786
0000 400 7009	77-355-1	LG 865
0000 955 0801	04-009	LG 686
0000-120-1653	30-853	LG 213
0000-120-1654	30-853	LG 213
0000-140-4402	30-853	LG 213
0000-350-0510	56-018	LG 690
0000-350-0520	56-019	LG 772
0000-350-0522	56-019	LG 772
0000-350-0531	07-132	LG 773
0000-350-3500	07-109	LG 778
0000-350-3502	07-109	LG 778
0000-350-3503	07-109	LG 778
0000-350-3504	07-109	LG 778
0000-350-3504	07-217	LG 778
0000-350-3506	07-133	LG 778
0000-400-1300	33-244	LG 786
0000-400-1302	33-243	LG 786
0000-400-1306	33-243	LG 786
0000-951-2911	56-025	LG 687
0000-955-0801	04-009	LG 686
000-955-0801	04-009	LG 686
000-997-1501	55-996	LG 988
1082	55-231	LG 212
1100-430-0202	55-111	LG 1026
110590	56-011	LG 687
1106-644-1500	56-025	LG 687
1106-664-1501	56-025	LG 687
1107 195 3400	31-914	LG 930
1107-195-3400	31-914	LG 930
1110 358 1800	07-205	LG 779
1110-120-1601	30-154	LG 213
1110-121-5100	49-021	LG 629
1110-258-1800	07-205	LG 779
1110-358-1800	07-205	LG 779
1110-430-0202	55-111	LG 1026
1110-430-0210	55-111	LG 1026
1110-664-1500	56-008	LG 687
1110-664-1600	56-008	LG 687
1114-121-7800	55-342	LG 627
1115 350 3503	07-109	LG 778
1115 350 3503	07-217	LG 778
1115-350-3503	07-109	LG 778
1115-350-3503	07-217	LG 778
1116-121-5100	49-021	LG 629
1117 190 0601	43-699	LG 936
1117 350 0500	56-019	LG 772
1117 353 0503	56-019	LG 772
1117 640 3600	56-018	LG 690
1117 646 0600	56-018	LG 690
1117-190-0061	43-699	LG 936
1117-190-0601	43-699	LG 936
1117-350-0500	56-019	LG 772
1117-353-0503	56-019	LG 772
1117-640-3600	56-018	LG 690
1118 120 1611	55-236	LG 213
1118 120 1615	55-236	LG 213
1118 190 0600	43-694	LG 936
1118 640 3600	56-018	LG 690
1118 664 1600	56-011	LG 687
1118-120-1610	55-236	LG 213
1118-120-1611	55-236	LG 213
1118-120-1615	55-236	LG 213
1118-190-0600	43-694	LG 936
1118-664-1600	56-011	LG 687
1119-120-1611	55-236	LG 213
1119-358-7700	07-007	LG 689
1119-358-7701	07-007	LG 689
1119-358-7702	07-135	LG 762
1120 120 1600	30-155	LG 213
1120 124 0800	30-155	LG 213
1120 350 3500	07-109	LG 778
1120 350 3500	07-217	LG 778
1120 664 1500	56-011	LG 687
1120-120-1600	30-155	LG 213
1120-121-7802	55-343	LG 627
1120-124-0800	30-155	LG 213
1120-350-3500	07-109	LG 778
1120-350-3500	07-217	LG 778
1120-350-3501	07-217	LG 778
1120-664-1500	56-011	LG 687
1121 195 3400	31-914	LG 930
1121-120-1617	30-337	LG 213
1121-120-1618	30-337	LG 213
1121-195-3400	31-914	LG 930
1121-430-0200	55-111	LG 1026
1122-400-1314	33-245	LG 786
1122-664-2200	56-023	LG 687
1122-664-4500	56-023	LG 687
1123-195-0400	31-006	LG 935
1123-358-7701	07-075	LG 763
1123-358-7702	07-075	LG 763
1123-400-1301	33-243	LG 786
1123-640-1900	56-024	LG 687
1123-664-1400	56-024	LG 687
1124-195-7200	31-011	LG 931
1124-350-0500	07-132	LG 773
1124-358-7700	07-136	LG 762
1125 640 7100	56-030	LG 693
1125 640 7110	56-030	LG 693
1125-007-1021	56-023	LG 687
1125-195-7200	31-092	LG 931
1125-640-1900	56-023	LG 687
1125-640-7100	56-030	LG 693
1125-640-7110	56-030	LG 693
1125-647-2400	56-030	LG 693
1127-358-7702	07-072	LG 763
1128-195-0400	31-010	LG 935
1128-358-7701	07-134	LG 763
1129-890-3401	57-005	LG 677
1129-890-3401	57-016	LG 677
1130 124 0800	30-156	LG 213
1130 124 0801	30-156	LG 213
1130 350 0500	07-131	LG 772
1130-124-0800	30-156	LG 213
1130-350-0500	07-131	LG 772
115-350-3503	07-109	LG 778
119 358 7700	07-007	LG 689
301272	40-144	LG 587
309891	55-231	LG 212
35RS 100R	58-012	LG 957
4002-710-2191	55-993	LG 988
4002-713-3017A	55-971	LG 988
4002-713-7001	55-973	LG 988
4003-713-8301	55-972	LG 988
4007000	77-355-1	LG 865
4111 007 1001	55-460-1	LG 1026
4111-007-1001	55-460-1	LG 1026
4112 350 0500	55-109	LG 773
4112 350 3500	55-110	LG 765
4112-124-0801	55-231	LG 212
4112-195-1600	43-685	LG 936
4112-350-0500	55-109	LG 773
4112-350-3500	55-110	LG 765
4114 350 0502	55-109	LG 773
4114 350 0504	55-109	LG 773
4114-124-0800	55-231	LG 212
4114-350-0500	55-109	LG 773
4114-350-0502	55-109	LG 773
4114-350-0504	55-109	LG 773
4117-122-9402	55-333	LG 633
4126-350-0501C	55-102	LG 773
4126-350-501C	55-102	LG 773
4128 350 0504	55-102	LG 773
4128 350 0505	55-102	LG 773
41283500504	55-102	LG 773
4128-350-0504	55-102	LG 773
4128-358-0800	07-074	LG 1026
4130 350 6200	07-073	LG 768
4130-350-6200	07-073	LG 768
4133 713 4101	40-141	LG 585
4133 713 4102	40-141	LG 585
4133-121-2700	49-020	LG 631
4133-350-0501	55-102	LG 773
4134-141-0300	55-079	LG 214
4137 124 1500	30-956	LG 216
4137-124-1500	30-956	LG 216
4144-350-0502	55-109	LG 773
4201-140-1801	55-242	LG 214
4201-140-1805	30-416	LG 214
4201-140-1805	55-240	LG 214
4201-141-0300	55-240	LG 214
4201-141-0300	55-263	LG 214
4201-141-0310	55-241	LG 214
4203-141-0300	30-416	LG 214
4203-141-0300	30-837	LG 214
4203-141-0301	30-137	LG 214
4203-141-0301A	30-137	LG 214
4203-141-0310	55-247	LG 214
4203-350-7600	07-156	LG 761
4221-007-1002	55-262	LG 215
4221-140-1800	55-243	LG 215
4221-140-440	55-248	LG 215
4221-140-4400	55-248	LG 215
4221-141-0310	55-246	LG 214
4223-007-1010	30-153	LG 216
4223-140-1800	30-838	LG 215
4223-140-1800	55-244	LG 215
4223-141-0300	30-153	LG 216
4223-141-0300	30-839	LG 215
4223-141-0300	55-249	LG 215
4223-141-0600	55-245	LG 215
4228-710-6050A	59-200	LG 783
4228-710-6051A	59-201	LG 783
4237-710-6051	59-202	LG 783
4237-710-6052	59-203	LG 783
4238-140-1800	30-333	LG 216
4238-140-4401	30-333	LG 216
4238-140-4402	30-333	LG 216
4238-141-0300	30-333	LG 216
4238-141-300B	30-333	LG 216
4301-141-033	30-640	LG 210
55-241-55-241	55-240	LG 214
55-249	30-153	LG 216
9490-000-7840	75-272	LG 684
94900007850	15-780	LG 320
9490-000-7850	75-272	LG 684
94900007851	15-781	LG 320
9490-000-7851	75-273	LG 320
94900007891	15-782	LG 320
94900007900A	15-783	LG 320
94900007901A	15-784	LG 320
94900007915	15-785	LG 320
94900007920	15-786	LG 320
9550801	04-009	LG 686
9646-945-0490	56-023	LG 687
SUTECH		
2107/09	96-632*	LG 559
2107/10	96-632*	LG 559
2107/11	91-802	LG 560
2107/11	96-632*	LG 559
SWISHER		
10358	92-147	LG 559
12504	392-677*	LG 559
12925	392-677*	LG 559
15767	392-677*	LG 559
20186	391-574*	LG 559
20186	91-574*	LG 559
3293	391-574*	LG 559
3293	91-574*	LG 559
3295	91-573*	LG 559
4218	72-756	LG 1046
5059	91-573*	LG 559
660	91-732	LG 559
9004	391-574*	LG 559
9004	91-050	LG 559
9004	91-574*	LG 559
9005	91-051	LG 559
9036	91-051	LG 559
9037	391-574*	LG 559
9037	91-050	LG 559
9037	91-574*	LG 559
B32S	91-051	LG 559
T.G. & Y.		
754-0145	75-145	LG 300
754-0266	75-016	LG 301
954-0145	75-145	LG 300
954-0145A	75-145	LG 300

X

* OREGON® Gator™ replacement blade

OEM No.	OREGON	Page
954-015A	75-145	LG 300
954-0266	75-016	LG 301
954-0266A	75-016	LG 301
TANAKA		
140-5	55-804-1	LG 994
140-7	55-807	LG 994
301272	40-141	LG 585
323619	40-141	LG 585
43533110200	40-141	LG 585
43533110200	40-503	LG 589
447-25108-200	49-020	LG 631
578-25006-200	55-342	LG 627
5950165C91	55-106	LG 773
5950165C91	55-132	LG 773
595-0165C-91	55-106	LG 773
5950165C92	55-106	LG 773
595-0165-C-92	55-106	LG 773
5950423Q90	55-132	LG 773
5950423Q910	55-132	LG 773
595-0650-A-90	55-106	LG 773
603-25001-200	49-021	LG 629
650-25001-900	49-816	LG 612
650-25001-910	49-816	LG 612
650-25010-900	49-816	LG 612
650-25011-900	49-816	LG 612
650-25013-900	49-816	LG 612
650-25022-900	49-816	LG 612
652-25001-900	49-812	LG 612
652-25001-910	49-812	LG 612
652-25006-900	49-812	LG 612
652-25012-900	49-835	LG 611
652-25012-910	49-835	LG 611
6684620	07-092	LG 778
6685139	07-088	LG 768
6690192	40-141	LG 585
6690192	40-503	LG 589
6691173	07-094	LG 778
6692273	07-094	LG 778
6750404280	07-092	LG 778
695-000510	55-018	LG 771
TECUMSEH		
1010	50-650	LG 599
1021	50-650	LG 599
1022	50-650	LG 599
1034	50-650	LG 599
1035	50-650	LG 599
1036	50-650	LG 599
1056	50-650	LG 599
1059	50-650	LG 599
1060	50-650	LG 599
1099	50-642	LG 598
1107	50-646	LG 598
1126	50-650	LG 599
1135	50-647	LG 598
1137	50-650	LG 599
1159	50-646	LG 598
1277	50-650	LG 599
1278	50-650	LG 599
1279	50-650	LG 599
1432	50-642	LG 598
1471	50-647	LG 598
1474	50-650	LG 599
1483	50-647	LG 598
1499	50-650	LG 599
1500	50-650	LG 599
1529	50-650	LG 599
1538	50-649	LG 598
1548	50-650	LG 599
1549	50-650	LG 599
1550	50-650	LG 599
1552	50-650	LG 599
1554	50-650	LG 599
1555	50-650	LG 599
1558	50-650	LG 599
1604	50-650	LG 599
1610	50-650	LG 599
1619	50-650	LG 599
1623	50-650	LG 599
1650	50-650	LG 599
1652	50-650	LG 599
1670	50-649	LG 598
226	50-650	LG 599
24449	07-001	LG 765
25548	49-041-0	LG 749
26208	49-041-0	LG 749
26750	50-204	LG 758
26750A	50-204	LG 758
26752	49-402	LG 758
26754	49-153	LG 758
26754A	49-153	LG 758
26756	49-402	LG 758
26762	35-003	LG 809
26819	35-003	LG 809
27110	49-084	LG 759
27110A	49-084	LG 759
27118	49-201	LG 608
27141	49-402	LG 758
27181	35-003	LG 809
27181A	35-003	LG 809
27181B	35-003	LG 809
27181C	35-003	LG 809
27222	31-904	LG 930
27226	31-904	LG 930
27234	49-120	LG 759
27234A	49-120	LG 759
27247	02-404	LG 790
27263	31-904	LG 930
27272	49-150	LG 758
27272A	49-150	LG 758
27278	35-003	LG 809
27578	49-201	LG 608
27625	49-667	LG 750
27689	07-400	LG 767
27803	07-400	LG 767
27904	50-032	LG 759
27915	49-411	LG 759
27915A	49-411	LG 759
27930A	49-157	LG 759
27948	33-008	LG 789
27948	33-606	LG 789
27948A	33-008	LG 789
27948A	33-606	LG 789
28269	35-016	LG 809
28614	35-003	LG 809
28641	49-201	LG 608
28863	35-003	LG 809
28879	49-201	LG 608
28899	35-016	LG 809
28938	50-032	LG 759
28938A	50-032	LG 759
28938B	50-032	LG 759
28938C	50-032	LG 759
29155	49-201	LG 608
29157	49-201	LG 608
29523	50-206	LG 758
29632	33-363	LG 787
29633	35-008	LG 808
29683	07-400	LG 767
29775	49-016	LG 759
29776	49-014	LG 759
29780011	31-067	LG 935
29923	30-083	LG 219
29961	30-083	LG 219
30188	49-016	LG 759
30226	49-016	LG 759
30226	49-411	LG 759
30359	49-201	LG 608
30546	33-363	LG 787
30547A	33-008	LG 789
30547A	33-606	LG 789
30548B	33-008	LG 789
30548B	33-606	LG 789
30560	33-363	LG 787
30560A	33-363	LG 787
30604	30-070	LG 216
30684	50-206	LG 758
30727	30-070	LG 216
30727	30-822	LG 216
30804	30-081	LG 205
30874	35-001	LG 806
30911	35-001	LG 806
30983	49-201	LG 608
30996	35-003	LG 809
31390	49-201	LG 608
31393	49-201	LG 608
31394	49-201	LG 608
31688	49-014	LG 759
31688A	49-014	LG 759
31700	30-205	LG 219
31700A	30-205	LG 219
31840	49-025	LG 629
31840	49-840	LG 609
31840	49-841	LG 626
31840	49-916	LG 629
31840	53-006	LG 632
31925	30-082	LG 205
32008	30-080	LG 205
32008	30-819	LG 205
32043	35-003	LG 809
32043A	35-003	LG 809
32043A	35-006	LG 808
32043B	35-006	LG 808
32080	33-333	LG 786
32089	33-320-0	LG 731
32164	07-001	LG 765
32247	35-003	LG 809
32401	35-028	LG 810
32439	07-001	LG 765
32510	33-716	LG 921
32641	50-407	LG 758
32641A	50-407	LG 758
32641B	50-407	LG 758
32641C	50-407	LG 758
32648	35-032	LG 809
32648A	35-032	LG 809
32649	49-016	LG 759
32649A	49-016	LG 759
32754	49-120	LG 759
32817	33-716	LG 921
32906	30-941	LG 219
32972	30-091	LG 217
32985	35-005	LG 806
33015	50-548	LG 759
33015A	50-548	LG 759
33051	49-152	LG 758
33202	33-712	LG 921
33233A	49-150	LG 758
33235	49-150	LG 758
33235A	49-150	LG 758
33236B	50-407	LG 758
33237B	49-150	LG 758
33238	50-407	LG 758
33238A	50-407	LG 758
33238B	50-407	LG 758
33238C	50-407	LG 758
33238D	49-150	LG 758
33238D	49-152	LG 758
33238D	50-407	LG 758
33238E	50-407	LG 758
33239A	49-150	LG 758
33240B	49-150	LG 758
33263	49-403	LG 758
33268	30-100	LG 217
33268	30-841	LG 217
33270	50-033	LG 759
33279	50-302	LG 758
33279A	50-302	LG 758
33279B	50-302	LG 758
33279C	50-302	LG 758
33279D	50-302	LG 758
33279E	50-302	LG 758
33279F	50-302	LG 758
33279G	49-150	LG 758
33279G	50-302	LG 758
33279H	50-302	LG 758
33279J	49-150	LG 758
33279J	50-302	LG 758
33279L	49-150	LG 758
33279L	50-302	LG 758
33280	35-015	LG 810
33280A	35-015	LG 810
3329B	33-738	LG 921
33329	33-738	LG 921
33329A	33-738	LG 921
33329B	33-738	LG 921
33329C	33-738	LG 921
33329D	33-738	LG 921
33329E	33-738	LG 921
33329F	33-738	LG 921
33432	33-527	LG 928
33519	33-738	LG 921
33519A	33-738	LG 921
33519B	33-738	LG 921
33542	33-738	LG 921
33542A	33-738	LG 921
33554	50-548	LG 759
33554A	50-548	LG 759
33591B	33-738	LG 921
33605	33-712	LG 921
33652	35-001	LG 806
33670	49-157	LG 759
33670A	49-157	LG 759
33679	07-392	LG 767
33683B	49-150	LG 758
33697	35-032	LG 809
33697A	35-032	LG 809
33697A0	35-032	LG 809
33697AO	35-032	LG 809
33740D	49-150	LG 758
33740D	49-152	LG 758
33835	33-716	LG 921
33844	33-526	LG 928
33861	49-403	LG 758
339	50-650	LG 599
34041	50-033	LG 759
34041A	50-033	LG 759
34041B	50-033	LG 759
34042	50-302	LG 758
34042A	50-302	LG 758
34185	35-015	LG 810
34185A	35-015	LG 810
34185B	35-015	LG 810
34200A	30-142	LG 217
34200B	30-142	LG 217
34279	07-107	LG 774
34279A	07-107	LG 774
34279B	07-107	LG 774
34340	30-117	LG 219
34443	33-346	LG 786
34443A	33-346	LG 786
34443B	33-346	LG 786
34443C	33-346	LG 786
34443D	33-346	LG 786
34673	35-015	LG 810
34690A	49-156	LG 759
34700	30-142	LG 217
34700A	30-142	LG 217
34700B	30-142	LG 217

X

* OREGON® Gator™ replacement blade

2019 OEM X-Reference

OEM No.	OREGON	Page
TECUMSEH		
34782	30-141	LG 217
34782	30-641	LG 198
34782A	30-141	LG 217
34782B	30-141	LG 217
34783	30-116	LG 219
34923	50-033	LG 759
34923A	50-033	LG 759
35062	33-089	LG 946
35066	30-301	LG 217
35066	30-801	LG 217
35066	69-034	LG 217
35096	33-738	LG 921
35135	33-343	LG 787
35135A	33-343	LG 787
35135B	33-343	LG 787
35261	50-204	LG 758
35331B	49-150	LG 758
35355	07-314	LG 773
35403	30-111	LG 217
35403	30-842	LG 217
35404	30-951	LG 219
35500	30-112	LG 218
35663	35-015	LG 810
35763	33-712	LG 921
35763A	33-712	LG 921
35771	35-032	LG 809
35771A	35-032	LG 809
35865	49-157	LG 759
35872	49-150	LG 758
35876	33-712	LG 921
35899	33-768-0	LG 926
35997	49-150	LG 758
35997	49-152	LG 758
36045	49-085	LG 769
36045A	49-085	LG 769
36046	30-740	LG 218
36046	30-807	LG 218
36262	69-281	LG 814
36262	83-013	LG 817
36262	83-401	LG 817
36262	83-501	LG 817
36264	33-711	LG 921
36264	33-791	LG 921
36343	33-712	LG 921
36344	33-150	LG 787
36344A	33-150	LG 787
36356	30-024	LG 218
36356	30-850	LG 218
36357	30-952	LG 219
36365	83-013	LG 817
36377	33-711	LG 921
36377	33-791	LG 921
36435	83-013	LG 817
36439	49-150	LG 758
36442	49-150	LG 758
36443	50-548	LG 759
36444	49-150	LG 758
36447	49-150	LG 758
36450	49-150	LG 758
36450A	49-150	LG 758
36450B	49-150	LG 758
36463	33-712	LG 921
36563	69-281	LG 814
36563	83-013	LG 817
36563	83-401	LG 817
36680	33-712	LG 921
36745	30-030	LG 218
36745	30-840	LG 218
36745	514316	
36795	33-711	LG 921
36795	33-791	LG 921
36853	33-713	LG 921
36853	33-739	LG 921
36905	30-031	LG 218
36905	30-817	LG 218
36905	69-331	LG 218
36914	33-713	LG 921
36914	33-739	LG 921
36959	33-768-0	LG 926
36961	69-281	LG 814
36961	83-013	LG 817
36961	83-401	LG 817
3700	33-738	LG 921
37000	33-738	LG 921
37050	33-527	LG 928
37052A	33-527	LG 928
37105	33-738	LG 921
37130	50-204	LG 758
37137	33-150	LG 787
37360	30-443	LG 218
37425	33-713	LG 921
37425	33-739	LG 921
37442	33-768-0	LG 926
37609	50-204	LG 758
37651	45-118	LG 760
386	50-650	LG 599
39-910	49-201	LG 608
39-931	49-201	LG 608
418	50-650	LG 599
419	50-650	LG 599
422	50-650	LG 599
433	50-650	LG 599
438	50-650	LG 599
445	50-650	LG 599
450247	30-711	LG 218
5001	50-655	LG 600
5002	50-659	LG 600
5005	50-652	LG 599
5017	50-655	LG 600
5023	50-651	LG 599
5028	50-653	LG 599
5036	50-659	LG 600
5043	50-654	LG 599
5044	50-653	LG 599
5048	50-651	LG 599
5087	50-653	LG 599
5097	50-655	LG 600
5128	50-655	LG 600
5165	50-655	LG 600
5196	50-654	LG 599
5199	50-656	LG 600
5243	50-653	LG 599
5252	50-666	LG 601
5274	50-641	LG 598
5285	50-640	LG 598
5313	50-659	LG 600
5333	50-653	LG 599
590214	31-904	LG 930
590284	31-904	LG 930
590288	31-904	LG 930
590289	31-904	LG 930
590306	31-904	LG 930
590339	31-904	LG 930
590387	31-904	LG 930
590387A	31-904	LG 930
590388	31-904	LG 930
590420	31-051	LG 924
590420A	31-051	LG 924
590449	31-051	LG 924
590458	31-051	LG 924
590472	31-117	LG 925
590537	31-051	LG 924
590557	31-051	LG 924
5905574	31-907	LG 929
590558	31-051	LG 924
590574	31-907	LG 929
590595	31-051	LG 924
590618	31-067	LG 935
590618A	31-067	LG 935
590646	31-117	LG 925
590648	31-117	LG 925
590671	31-047	LG 925
590672	31-116	LG 925
590686	31-050	LG 924
590694	31-050	LG 924
590704	31-047	LG 925
590706	31-051	LG 924
590707	31-117	LG 925
590733	31-116	LG 925
590737	31-050	LG 924
590742	31-117	LG 925
590746	31-047	LG 925
590748	31-047	LG 925
590748A	31-047	LG 925
590749	31-116	LG 925
590749A	31-116	LG 925
590784	31-117	LG 925
590787	31-117	LG 925
590788	31-047	LG 925
590789	31-116	LG 925
610768	33-363	LG 787
610935	33-420	LG 741
610961	02-404	LG 790
610995	02-406	LG 790
611004	02-403	LG 790
611154	02-405	LG 790
611161	33-420	LG 741
630748	53-006	LG 632
630752	49-239	LG 609
630759	49-239	LG 609
630811	49-239	LG 609
630823	49-239	LG 609
630906	49-239	LG 609
630914	49-239	LG 609
630932	49-039	LG 629
630932A	49-039	LG 629
630954	49-239	LG 609
630974	49-239	LG 609
630974A	49-239	LG 609
630978	49-002	LG 623
630980	49-039	LG 629
630981	49-239	LG 609
631010	49-039	LG 629
631011	49-239	LG 609
631011A	49-239	LG 609
631021	49-025	LG 629
631021	49-916	LG 629
631021A	49-025	LG 629
631021A	49-916	LG 629
631021B	49-025	LG 629
631021B	49-916	LG 629
631023	49-009	LG 625
631027	53-005	LG 632
631028	49-025	LG 629
631028	49-841	LG 626
631028	49-916	LG 629
631028	53-006	LG 632
631028A	49-025	LG 629
631028A	49-841	LG 626
631028A	49-916	LG 629
631028A	53-006	LG 632
631029	49-025	LG 629
631029	49-029	LG 609
631029	49-841	LG 626
631029	49-916	LG 629
631029	53-005	LG 632
631029	53-006	LG 632
631050	49-039	LG 629
631051	49-239	LG 609
631069	49-002	LG 623
631088	49-239	LG 609
631111	49-239	LG 609
631121	49-239	LG 609
631131	49-239	LG 609
631137	49-239	LG 609
631141	49-239	LG 609
631146	49-239	LG 609
631162	49-239	LG 609
631180	49-025	LG 629
631180	49-841	LG 626
631180	49-916	LG 629
631180	53-005	LG 632
631180	53-006	LG 632
631193	49-239	LG 609
631207	49-039	LG 629
631208	49-239	LG 609
631240	49-029	LG 609
631388	49-039	LG 629
631389	49-239	LG 609
631397	49-039	LG 629
631398	49-239	LG 609
631432	49-039	LG 629
631433	49-239	LG 609
631472	49-039	LG 629
631473	49-239	LG 609
631584	49-229	LG 609
631612	50-650	LG 599
631700	49-307	LG 625
631736	49-025	LG 629
631736	49-916	LG 629
631746	53-006	LG 632
631748	50-650	LG 599
631769	49-039	LG 629
631770	49-239	LG 609
631782	49-133	LG 609
631831	50-650	LG 599
631839	49-025	LG 629
631839	49-229	LG 609
631839	49-841	LG 626
631839	49-916	LG 629
631839	53-005	LG 632
631839	53-006	LG 632
631840	49-840	LG 609
631862	49-025	LG 629
631862	49-841	LG 626
631862	49-916	LG 629
631862	53-005	LG 632
631862	53-006	LG 632
631867	49-308	LG 625
631884	53-005	LG 632
631892	49-239	LG 609
631893	49-002	LG 623
631893	49-039	LG 629
631893	49-239	LG 609
631893A	49-039	LG 629
631893A	49-239	LG 609
631894	49-025	LG 629
631894	49-841	LG 626
631894	49-916	LG 629
631894	53-005	LG 632
631894	53-006	LG 632
631902	50-650	LG 599
631902A	50-650	LG 599
631906	53-005	LG 632
631974	49-025	LG 629
631974	49-841	LG 626
631974	49-916	LG 629
631974	53-005	LG 632
631974	53-006	LG 632
631976	49-025	LG 629
631976	49-841	LG 626
631976	49-916	LG 629
631976	53-005	LG 632
631976	53-006	LG 632
631978	49-025	LG 629
631978	49-841	LG 626
631978	49-916	LG 629
631978	49-978	LG 609
631978	53-005	LG 632

X

* OREGON® Gator™ replacement blade

TECUMSEH

OEM No.	OREGON	Page
631978	53-006	LG 632
632009	49-025	LG 629
632009	49-841	LG 626
632009	49-916	LG 629
632009	53-005	LG 632
632009	53-006	LG 632
632019	49-009	LG 625
632019A	49-009	LG 625
632046	50-650	LG 599
632046A	50-650	LG 599
632047	49-034	LG 630
632047A	49-034	LG 630
632050	50-650	LG 599
632050A	50-650	LG 599
632051	50-650	LG 599
632052	50-650	LG 599
632053	50-650	LG 599
632055	50-650	LG 599
632070	50-650	LG 599
632078	50-650	LG 599
632078A	50-650	LG 599
632086	50-650	LG 599
632087	50-650	LG 599
632088	50-650	LG 599
632098	50-650	LG 599
632107	50-640	LG 598
632107A	50-640	LG 598
632110	50-663	LG 600
632113	50-662	LG 600
632113A	50-662	LG 600
632208	50-647	LG 598
632209	49-025	LG 629
632209	49-841	LG 626
632209	49-916	LG 629
632209	53-005	LG 632
632209	53-006	LG 632
632214	50-650	LG 599
632230	50-646	LG 598
632235	49-025	LG 629
632235	49-841	LG 626
632235	49-916	LG 629
632235	53-005	LG 632
632235	53-006	LG 632
632240	50-650	LG 599
632272	50-646	LG 598
632297	55-333	LG 633
632315	55-342	LG 627
632315A	55-342	LG 627
632320	49-812	LG 612
632334	50-642	LG 598
632334A	50-642	LG 598
632347	49-025	LG 629
632347	49-230	LG 609
632347	49-841	LG 626
632347	49-916	LG 629
632347	53-005	LG 632
632347	53-006	LG 632
632349	50-650	LG 599
632355	49-025	LG 629
632355	49-841	LG 626
632355	49-916	LG 629
632355	53-005	LG 632
632355	53-006	LG 632
632369	50-650	LG 599
632370	50-663	LG 600
632370A	50-663	LG 600
632380	50-650	LG 599
632387	50-650	LG 599
632387A	50-650	LG 599
632388	50-650	LG 599
632389	50-650	LG 599
632389A	50-650	LG 599
632391	50-650	LG 599
632398	49-025	LG 629
632398	49-841	LG 626
632398	49-916	LG 629
632398	53-006	LG 632
632407	49-025	LG 629
632407	49-841	LG 626
632407	49-916	LG 629
632407	53-005	LG 632
632407	53-006	LG 632
632420	50-650	LG 599
632466	50-650	LG 599
632467	50-650	LG 599
632468	50-650	LG 599
632559	49-025	LG 629
632559	49-841	LG 626
632559	49-916	LG 629
632559	53-005	LG 632
632559	53-006	LG 632
632564	49-025	LG 629
632564	49-841	LG 626
632564	49-916	LG 629
632564	53-005	LG 632
632564	53-006	LG 632
632575	50-650	LG 599
632584	49-025	LG 629
632584	49-841	LG 626
632584	49-916	LG 629
632584	53-005	LG 632
632584	53-006	LG 632
632589	50-647	LG 598
632592	49-025	LG 629
632592	49-841	LG 626
632592	49-916	LG 629
632592	53-005	LG 632
632592	53-006	LG 632
632610	50-650	LG 599
632610A	50-650	LG 599
632611	50-650	LG 599
632611A	50-650	LG 599
632614	50-649	LG 598
632615	50-647	LG 598
632622	49-230	LG 609
632623B	49-916	LG 629
632635	50-650	LG 599
632640	49-025	LG 629
632640	49-841	LG 626
632640	49-916	LG 629
632640	53-005	LG 632
632640	53-006	LG 632
632644	50-650	LG 599
632645	50-650	LG 599
632646	50-650	LG 599
632669	50-650	LG 599
632670	50-650	LG 599
632671	50-649	LG 598
632671A	50-649	LG 598
632671B	50-649	LG 598
632671C	50-649	LG 598
632673	49-084	LG 759
632678	50-650	LG 599
632681	50-650	LG 599
632689	50-656	LG 600
632694	49-231	LG 630
632694A	49-231	LG 630
632699	50-650	LG 599
632733	50-650	LG 599
632744	50-650	LG 599
632747	50-650	LG 599
632750	50-650	LG 599
632760	49-019	LG 609
632760	49-025	LG 629
632760	49-841	LG 626
632760	49-916	LG 629
632760	53-005	LG 632
632760	53-006	LG 632
632760A	49-019	LG 609
632760B	49-019	LG 609
632769	50-650	LG 599
632772	50-650	LG 599
632795	50-650	LG 599
632795A	50-650	LG 599
632807	49-916	LG 629
632808	49-308	LG 625
633014	50-650	LG 599
640004	50-653	LG 599
640014	50-653	LG 599
640017	50-651	LG 599
640017A	50-651	LG 599
640017B	50-651	LG 599
640020	50-652	LG 599
640020A	50-652	LG 599
640020B	50-652	LG 599
640023	50-655	LG 600
640025	50-653	LG 599
640025A	50-653	LG 599
640025B	50-653	LG 599
640025C	50-653	LG 599
6400330	50-641	LG 598
640034A	50-641	LG 598
640042	49-084	LG 759
640051	50-655	LG 600
640052	50-659	LG 600
640054	50-659	LG 600
640060	50-664	LG 600
640060A	50-664	LG 600
640065	50-654	LG 599
640065A	50-654	LG 599
640072	50-641	LG 598
640072A	50-641	LG 598
640084	50-640	LG 598
640084A	50-640	LG 598
640084B	49-242	LG 624
640084B	50-640	LG 598
640084B	50-642	LG 598
640104	50-651	LG 599
640112	50-655	LG 600
640117	50-651	LG 599
640117B	50-651	LG 599
640140	50-655	LG 600
640149	50-661	LG 600
640152	50-655	LG 600
640152A	50-655	LG 600
640159	50-641	LG 598
640214	50-661	LG 600
640222	50-664	LG 600
640222A	50-664	LG 600
640259	49-085	LG 769
640260	50-656	LG 600
640260A	50-656	LG 600
640260B	50-656	LG 600
640278	50-661	LG 600
640278A	50-661	LG 600
640298	50-666	LG 601
640305	50-665	LG 601
640306	50-664	LG 600
640306A	50-664	LG 600
640330A	50-641	LG 598
640340	50-664	LG 600
640346	50-665	LG 601
640347	50-667	LG 600
640349	50-659	LG 600
640647	50-667	LG 600
651053	49-239	LG 609
703	50-650	LG 599
730235	49-240	LG 626
730235A	49-240	LG 626
730235B	49-240	LG 626
730326	33-713	LG 921
730326	33-739	LG 921
730527	07-102	LG 774
730527A	07-102	LG 774
730600	33-186	LG 789
730637	49-241	LG 626
730637A	49-241	LG 626
730638	49-237	LG 626
730639	49-238	LG 626
740003B	07-107	LG 774
740007B	02-403	LG 790
740037	33-186	LG 789
740037A	33-186	LG 789
740037B	33-186	LG 789
740083A	30-031	LG 218
790006	76-110	LG 726
799021	76-110	LG 726
8892	33-738	LG 921
88921	33-738	LG 921
88922	33-738	LG 921
88923	33-738	LG 921
88924	33-738	LG 921
88925	33-738	LG 921
8892S	33-738	LG 921

TILDEN

OEM No.	OREGON	Page
10-002FW6.0	72-420	LG 1047
10-008C	70-344	LG 959
10-009C	70-328	LG 959
10-010C	70-343	LG 958
10-014C	70-326	LG 959
10-021C	70-307	LG 960
10-022C	70-312	LG 959
10-027C	70-314	LG 959
10-034C	70-302	LG 959
10-039C	70-306	LG 960
10-046C	70-329	LG 960
10-049C	70-335	LG 959
10-059C	70-308	LG 959
10-090C	70-320	LG 959
10-100	71-103	LG 956
10-102	71-110	LG 956
10-105K	71-800	LG 956
10-106K	71-801	LG 956
10-108K	71-816	LG 956
10-110	71-104	LG 956
10-111K	71-098	LG 956
10-113K	71-099	LG 956
10-126	71-105	LG 957
10-128K	71-273	LG 957
10-129J	71-274	LG 956
10-129K	71-109	LG 956
10-130J	71-275	LG 956
10-130K	71-400	LG 956
10-131K	71-276	LG 956
10-145K	71-500	
10-146K	71-511	LG 956
10-147K	71-277	LG 956
10-150K	71-278	
10-161K	71-600	LG 956
10-162K	71-101	LG 956
10-163	71-102	LG 956
10-165K	71-602	LG 956
10-165K	71-610	LG 956
10-166	71-096	LG 956
10-168K	71-250	LG 956
10-168SK	71-280	LG 956
10-169	71-283	LG 957
10-320	71-106	LG 957
10-440	71-107	LG 957
10-442	71-108	LG 957
10-446K	71-111	LG 957
11-539	70-701	LG 964
13-010C	70-358	LG 958
13-038C	70-301	LG 959
13-061C	70-356	LG 958
13-218C	70-333	LG 963
13-223C	70-311	LG 960
13-3020C	45-306	LG 804

X

* OREGON® Gator™ replacement blade

2019 OEM X-Reference

OEM No.	OREGON	Page
TILDEN		
13-302C	70-316	LG 959
13-317C	70-334	LG 959
13-337C	70-340	LG 959
13-346C	70-349	LG 959
13-352	70-352	LG 959
13-363C	70-351	LG 959
13-402C	70-317	LG 959
13-423C	70-315	LG 960
13-424C	70-338	LG 959
13-478C	70-321	LG 960
13-540C	70-339	LG 959
13-548C	70-357	LG 958
13-550C	70-353	LG 958
13-552C	70-355	LG 959
13-557	70-359	LG 958
13-714C	70-330	LG 959
13-813C	70-331	LG 959
13-814C	70-332	LG 959
14-923K	71-100	LG 956
15-715	68-204	LG 962
30-461	71-002	LG 957
30-462	71-001	LG 957
40-162	72-106	LG 1029
40-172	72-107	LG 1029
40-182	72-108	LG 1031
40-205	72-110	LG 1030
40-561W	72-406	LG 1029
40-571W	72-407	LG 1029
40-581W	72-408	LG 1029
40-608	72-414	LG 1030
40-610W	72-410	LG 1030
50-648W	72-800	LG 1047
50-660	72-804	LG 1047
53-164	45-015	LG 233
53-217	45-014	LG 225
53-239	45-112	LG 241
53-240	45-012	LG 224
53-242	45-058	LG 232
53-242DGS	45-258	LG 224
53-242H	45-047	LG 241
53-244	45-034	LG 224
53-244DHGS	45-000	LG 237
53-244H	45-010	LG 238
53-246L	45-031	LG 232
53-254	45-079	LG 249
53-673	48-048	LG 725
53-674	48-049	LG 725
53-678	48-051	LG 725
54-260	78-680	LG 840
BOB-10	72-796	LG 1043
BOB-7	45-302	LG 804
BOB-7TLC	45-305	LG 804
DIX-1	72-765	LG 1043
SCA-1	45-303	LG 804
SCA-2	72-795	LG 1044
SNA-1	72-728	LG 1044
SNA-7	45-300	LG 804
TILLOTSON		
179-60	55-332	LG 633
34-188	49-021	LG 629
34-210	49-023	LG 629
34-216	49-021	LG 629
34-219	49-023	LG 629
95-177	55-342	LG 627
95-182	07-201	LG 779
95-197	55-340	LG 627
DG1HK	49-800	LG 610
DG1HS	49-802	LG 610
DG1HU	49-804	LG 610
DG2HL	49-801	LG 610
DG2HU	49-804	LG 610
DG3HU	49-804	LG 610
DG5HL	49-801	LG 610
DG5HS	49-802	LG 610
OW497	07-207	LG 779
OW802	07-206	LG 776
RK13HU	49-805	LG 609
RK14HU	49-805	LG 609
RK17HS	49-803	LG 610
RK23HS	49-803	LG 610
TIMBERLAND MACHINES		
754-0145	75-145	LG 300
754-0240	75-009	LG 301
754-0241	75-012	LG 301
754-0266	75-016	LG 301
954-0145	75-145	LG 300
954-0145A	75-145	LG 300
954-015A	75-145	LG 300
954-0240	75-009	LG 301
954-0241	75-012	LG 301
954-0241A	75-012	LG 301
954-0266	75-016	LG 301
954-0266A	75-016	LG 301
TK		
49-829	49-846	LG 608
TOP FLIGHT		
754-0145	75-145	LG 300
754-0151	75-004	LG 301
754-0178	75-179	LG 310
954-0145	75-145	LG 300
954-0145A	75-145	LG 300
954-0151	75-004	LG 301
954-015A	75-145	LG 300
954-0178	75-179	LG 310
TORO		
01-102-0130	45-205	LG 228
01-103-0060	45-206	LG 231
01-103-0130	45-206	LG 231
01-289-0030	30-430	LG 211
100078	71-104	LG 956
100-1048	45-257	LG 245
100200	94-615*	LG 370
10-0230	75-043	LG 312
100-3297-03	73-837	LG 802
100-3298-03	73-836	LG 802
100-3976	82-674	LG 904
100-5038	49-300	LG 626
100-5754	94-052	LG 573
100-5754	96-741*	LG 573
100-5754-03	94-052	LG 573
100-5754-03	96-741*	LG 573
100-6490-03	94-615*	LG 370
100776	91-802	LG 560
100776	96-632*	LG 559
100777	91-802	LG 560
100777	96-632*	LG 559
101143	34-032	LG 834
101144	34-039	LG 834
101335	91-802	LG 560
101335	96-632*	LG 559
101762	34-032	LG 834
101762	34-039	LG 834
101763	34-032	LG 834
101776	91-802	LG 560
102119	60-184	LG 720
102742	15-788	LG 320
103-2507	396-716*	LG 451
103-2507	596-310*	LG 447
103-2507	91-368	LG 460
103-2507	96-310*	LG 444
103-2508	96-344*	LG 536
103-2517	396-716*	LG 451
103-2517	596-310*	LG 447
103-2517	91-368	LG 460
103-2517	96-310*	LG 444
103-2518	91-335	LG 420
103-2518	96-344*	LG 536
103-2527	396-716*	LG 451
103-2527	596-310*	LG 447
103-2527	91-313	LG 494
103-2527	96-310*	LG 444
103-2528	91-312	LG 478
103-2528	96-344*	LG 536
103-2683	46-332	LG 720
103282	45-205	LG 228
10-3345	75-625	LG 313
103-5681	91-368	LG 460
103990	33-389	LG 945
104047	07-392	LG 767
104047P	07-392	LG 767
104-1300	94-615*	LG 370
104-1301	94-618*	LG 506
104-1303	94-621*	LG 570
104144	34-032	LG 834
104-2753	73-023	LG 847
104-2874	45-000	LG 237
104-5183	96-741*	LG 573
104-6325	45-018	LG 247
104-6325	45-025	LG 247
1046397	15-789	LG 320
1046398	15-790	LG 320
104-7550	49-300	LG 626
1048152	15-791	LG 320
104-8497	94-322	LG 520
104-8697	94-322	LG 520
104-8697	96-607*	LG 571
104-8697-03	94-322	LG 520
104-8697-03	96-607*	LG 571
104-8697-03P	94-322	LG 520
104-8697-03P	96-607*	LG 571
104974	34-032	LG 834
104975	34-039	LG 834
105-1671	33-189	LG 740
105-1688	82-675	LG 904
105-1844	60-529	LG 720
105-1845	60-530	LG 720
105-3036	72-166	LG 1037
105-4089	96-741*	LG 573
105-4089-03	96-741*	LG 573
105450	71-104	LG 956
105-7350	75-888	LG 322
105-7711	396-764*	LG 537
105-7711	596-341*	LG 482
105-7711	96-341*	LG 446
105771103	94-134	LG 572
105-7711-03	396-764*	LG 537
105-7711-03	596-341*	LG 482
105-7711-03	96-341*	LG 446
105-7712	396-764*	LG 537
105-7712	596-341*	LG 482
105-7712	96-341*	LG 446
105771203	94-136	LG 572
105-7712-03	396-764*	LG 537
105-7712-03	596-341*	LG 482
105-7712-03	96-341*	LG 446
105-7715	396-740*	LG 415
105-7715	596-319*	LG 415
105-7715	96-319*	LG 415
105771503	94-126	LG 569
105-7715-03	396-740*	LG 415
105-7715-03	596-319*	LG 415
105-7715-03	96-319*	LG 415
105-7716	396-740*	LG 415
105-7716	596-319*	LG 415
105-7716	96-319*	LG 415
105771603	94-133	LG 568
105-7716-03	396-740*	LG 415
105-7716-03	596-319*	LG 415
105-7716-03	96-319*	LG 415
105-7718	396-740*	LG 415
105-7718	596-319*	LG 415
105-7718	94-055	LG 480
105-7718	96-319*	LG 415
105-7718-03	396-740*	LG 415
105-7718-03	596-319*	LG 415
105-7718-03	94-055	LG 480
105-7718-03	96-319*	LG 415
105-7719	396-764*	LG 537
105-7719	596-341*	LG 482
105-7719	96-341*	LG 446
105-7719-03	396-764*	LG 537
105-7719-03	596-341*	LG 482
105-7719-03	96-341*	LG 446
105-7777	396-740*	LG 415
105-7777	596-319*	LG 415
105-7777	96-319*	LG 415
105777703	94-130	LG 569
105-7777-03	396-740*	LG 415
105-7777-03	596-319*	LG 415
105-7777-03	96-319*	LG 415
105-7778	396-764*	LG 537
105-7778	596-341*	LG 482
105-7778	96-341*	LG 446
105777803	94-131	LG 572
105-7778-03	396-764*	LG 537
105-7778-03	596-341*	LG 482
105-7778-03	96-341*	LG 446
105-7779	96-344*	LG 536
105777903	94-132	LG 566
105-7779-03	96-344*	LG 536
105-7781	94-053	LG 503
105-7781	96-344*	LG 536
105-7781-03	94-053	LG 503
105-7781-03	96-344*	LG 536
105-7784	396-764*	LG 537
105-7784	596-341*	LG 482
105-7784	92-035	LG 537
105-7784	96-341*	LG 446
105-7784-03	396-764*	LG 537
105-7784-03	596-341*	LG 482
105-7784-03	92-035	LG 537
105-7784-03	96-341*	LG 446
105-7794	91-256	LG 437
105-7794	96-344*	LG 536
105-7794-03	91-256	LG 437
105-7794-03	96-344*	LG 536
105-7795	96-344*	LG 536
105-7795-03	96-344*	LG 536
105-7796	96-344*	LG 536
105-7796-03	96-344*	LG 536
105874	34-009	LG 821
105-8777	396-740*	LG 415
105-8777	596-319*	LG 415
105-8777	96-319*	LG 415
105-8777-03	396-740*	LG 415
105-8777-03	596-319*	LG 415
105-8777-03	96-319*	LG 415
105-8783	75-887	LG 323
105-9810	94-052	LG 573
105-9810	96-741*	LG 573
105-9810-03	94-052	LG 573
105-9810-03	96-741*	LG 573
105-9810-05	94-052	LG 573
105-9810-05	96-741*	LG 573
106-0626	94-022	LG 565
106-0626	94-618*	LG 506
106-0627	94-026	LG 369
106-0627	94-615*	LG 370
106-0628	94-018	LG 565
106-0628	94-618*	LG 506
106-0629	94-019	LG 570
106-0629	94-621*	LG 570
106-0630	94-061	LG 561
106-0630	94-615*	LG 370

X

* OREGON® Gator™ replacement blade

TORO

OEM No.	OREGON	Page
106-0631	94-621*	LG 570
106077	90-643*	LG 560
106077	91-805	LG 560
106077-03	90-643*	LG 560
106077-03	91-805	LG 560
106078	90-644*	LG 561
106078	91-806	LG 447
106-0888	60-428	LG 720
106108	91-804	LG 560
106125	15-792	LG 320
106144	34-019	LG 821
106-2174	15-002	LG 311
106-2247	596-362*	LG 441
106-2247	94-068	LG 441
106-2247	96-362*	LG 570
106-2247-03	596-362*	LG 441
106-2247-03	94-068	LG 441
106-2247-03	96-362*	LG 570
106396	71-104	LG 956
106-4588-01	73-028	LG 850
106635	91-804	LG 560
106636	90-643*	LG 560
106636	91-805	LG 560
106637	90-644*	LG 561
106637	91-806	LG 447
106-7166-03	94-043	LG 568
106-7166-03	96-701*	LG 568
106-7369	15-016	LG 323
106-8300	60-531	LG 720
106-8777	396-740*	LG 415
106-8777	596-319*	LG 415
106-8777	96-319*	LG 415
106947	45-295	LG 232
107-0210-03	96-701*	LG 568
107-0215	96-701*	LG 568
107-0215-03	96-701*	LG 568
107-0217-03	94-620*	LG 414
107-0235-03	96-741*	LG 573
107-0241-03	96-708*	LG 571
107-1741-03	94-064	LG 565
107-1741-03	96-395*	LG 565
107-1742	96-395*	LG 565
107-1742-03	96-395*	LG 565
107-3192	396-735*	LG 452
107-3192	596-308*	LG 548
107-3192	92-036	LG 428
107-3192	96-308*	LG 456
107-3192-03	396-735*	LG 452
107-3192-03	596-308*	LG 548
107-3192-03	92-036	LG 428
107-3192-03	96-308*	LG 456
107-3193	396-735*	LG 452
107-3193	596-308*	LG 548
107-3193	96-308*	LG 456
107-3193-03	396-735*	LG 452
107-3193-03	596-308*	LG 548
107-3193-03	96-308*	LG 456
107-3194	396-735*	LG 452
107-3194	596-308*	LG 548
107-3194	96-308*	LG 456
107-3194-03	396-735*	LG 452
107-3194-03	596-308*	LG 548
107-3194-03	96-308*	LG 456
107-3195	396-735*	LG 452
107-3195	596-308*	LG 548
107-3195	96-308*	LG 456
107-3195-03	396-735*	LG 452
107-3195-03	596-308*	LG 548
107-3195-03	96-308*	LG 456
1073196	94-125	LG 563
107-3196	396-735*	LG 452
107-3196	596-308*	LG 548
107-3196	96-308*	LG 456
107-3196-03	396-735*	LG 452
107-3196-03	596-308*	LG 548
107-3196-03	96-308*	LG 456
107-4276-03	94-017	LG 441
107-4276-03P	94-017	LG 441
107963	71-511	LG 956
108-0954	96-660*	LG 441
108-0954-03	96-660*	LG 441
108-1114	396-740*	LG 415
108-1114	596-319*	LG 415
108-1114	94-055	LG 480
108-1114	96-319*	LG 415
108-1115	396-740*	LG 415
108-1115	596-319*	LG 415
108-1115	96-319*	LG 415
108-1116	94-615*	LG 370
108-1117	91-312	LG 478
108-1118	96-344*	LG 536
108-112	94-055	LG 480
108-1120	396-764*	LG 537
108-1120	596-341*	LG 482
108-1120	92-035	LG 537
108-1120	96-341*	LG 446
108-1123	396-740*	LG 415
108-1123	596-319*	LG 415
108-1123	96-319*	LG 415
108-1124	94-019	LG 570
108-1125	94-039	LG 561
108-1125	94-615*	LG 370
108-1126	396-764*	LG 537
108-1126	596-341*	LG 482
108-1126	96-341*	LG 446
108-1127	94-618*	LG 506
108-1128	396-740*	LG 415
108-1128	596-319*	LG 415
108-1128	94-133	LG 568
108-1128	96-319*	LG 415
108-1451	96-701*	LG 568
108-1452	96-701*	LG 568
108-1453	94-620*	LG 414
108-1477	94-618*	LG 506
108-1958	94-073	LG 573
108-1958-03	94-073	LG 573
108-2693	15-137	LG 323
108-2694	15-138	LG 323
108-2715	15-139	LG 323
108-2716	15-140	LG 323
108335	83-300	LG 819
108-3762-03	94-051	LG 570
108-3762-03	96-660*	LG 441
108-3762-03P	94-051	LG 570
108-3762-03P	96-660*	LG 441
108-3808	30-025	LG 208
108-3831	07-112	LG 774
108-3833	30-026	LG 208
108-4071	75-887	LG 323
108-4081	96-374*	LG 560
108-4081-03	96-374*	LG 560
108-4089-03	96-374*	LG 560
108-4110-03	96-374*	LG 560
108-4111-03	96-374*	LG 560
108-4112-03	96-374*	LG 560
108-4115-03	396-723*	LG 413
108-4115-03	594-085*	LG 564
108-4115-03	596-323*	LG 453
108-4115-03	96-323*	LG 477
108-4117-03	396-723*	LG 413
108-4117-03	594-085*	LG 564
108-4117-03	596-323*	LG 453
108-4117-03	96-323*	LG 477
108483	45-000	LG 237
108501	75-208	LG 277
108522	72-316	LG 1042
108-7395-03	394-075*	LG 571
108-7395-03	94-075	LG 481
108-7395-03	96-075*	LG 571
108798	72-309	LG 1042
108-9026-03	94-049	LG 573
108-9026-03	96-741*	LG 573
108-9764	96-607*	LG 571
108-9764-02P	94-322	LG 520
108-9764-03	96-607*	LG 571
108-9764-03P	96-607*	LG 571
109101	33-033	LG 742
109-6872	396-321*	LG 562
109-6872	596-321*	LG 562
109-6872	92-029	LG 435
109-6872	96-321*	LG 436
109-6873	396-322*	LG 438
109-6873	596-322*	LG 438
109-6873	92-030	LG 567
109-6873	96-322*	LG 567
109-8070	15-116	LG 283
109828	78-032	LG 822
109842	45-295	LG 232
109-9126	72-735	LG 1045
109966	45-257	LG 245
10-9966	45-257	LG 245
110-0404	396-764*	LG 537
110-0404	596-341*	LG 482
110-0404	94-134	LG 572
110-0404	96-341*	LG 446
110-0405	396-740*	LG 415
110-0405	596-319*	LG 415
110-0405	96-319*	LG 415
110-0406	94-135	LG 565
110-0406	96-344*	LG 536
110-0408	96-344*	LG 536
110-0409	96-344*	LG 536
110-0410	396-764*	LG 537
110-0410	596-341*	LG 482
110-0410	94-136	LG 572
110-0410	96-341*	LG 446
110-0411	396-764*	LG 537
110-0411	596-341*	LG 482
110-0411	96-341*	LG 446
110-0414	92-036	LG 428
110-0415	396-735*	LG 452
110-0415	596-308*	LG 548
110-0415	96-308*	LG 456
110-0416	396-735*	LG 452
110-0416	596-308*	LG 548
110-0416	96-308*	LG 456
110-0417	396-735*	LG 452
110-0417	596-308*	LG 548
110-0417	96-308*	LG 456
110-0621	94-071*	LG 571
110-0621	94-074	LG 571
110-0621-03	94-071*	LG 571
110-0621-03	94-074	LG 571
110-0622-03	92-035	LG 537
110-0622-03	94-071*	LG 571
110-0624	94-071*	LG 571
110-0624-03	94-071*	LG 571
110116	33-334	LG 730
1101162	33-334	LG 730
110162	33-334	LG 730
110167	33-334	LG 730
110167	33-335	LG 730
110167	33-336	LG 730
110-1857-03	596-362*	LG 441
110-1857-03	94-069	LG 441
110-1857-03	96-362*	LG 570
110370	34-031	LG 821
110-4701	94-138	LG 568
110-4701	96-801*	LG 479
110-4701-03	96-801*	LG 479
110-4702	94-072	LG 568
110-4702-03	94-072	LG 568
110-4702-03	96-801*	LG 479
110-4703	96-801*	LG 479
110-4703-03	96-801*	LG 479
110-5049	15-141	LG 323
110506	72-316	LG 1042
110513	45-000	LG 237
110-5946	94-079	LG 568
110-5946	96-802*	LG 568
110-5946-03	94-079	LG 568
110-5946-03	96-802*	LG 568
110-5948	96-802*	LG 568
110-5948-03	96-802*	LG 568
110-6115-03	96-708*	LG 571
110-6116-03	96-701*	LG 568
110-6568	596-362*	LG 441
110-6568	94-069	LG 441
110-6568	96-362*	LG 570
110-6568-03	596-362*	LG 441
110-6568-03	94-069	LG 441
110-6568-03	96-362*	LG 570
1106774	15-794	LG 320
110-6775	78-033	LG 834
110-6837-03	94-059	LG 564
110-6837-03	96-382*	LG 564
110-6871	115-145	LG 323
110-6892	15-795	LG 320
110771	35-021	LG 810
110774	35-021	LG 810
110-8837	45-266	LG 247
110-9915-03	396-723*	LG 413
110-9915-03	594-085*	LG 564
110-9915-03	596-323*	LG 453
110-9915-03	94-085	LG 564
110-9915-03	96-323*	LG 477
110-9961-03	396-723*	LG 413
110-9961-03	594-085*	LG 564
110-9961-03	596-323*	LG 453
110-9961-03	96-323*	LG 477
111216	33-389	LG 945
111474	07-315	LG 772
11-1560	34-008	LG 821
111674	33-330	LG 729
111674	33-331	LG 730
111674	33-337	LG 730
112-0302	98-061	LG 404
112-0302	98-637*	LG 512
112-0304	198-063	LG 513
112-0304	598-640*	LG 405
112-0304	98-640*	LG 574
1120309	33-335	LG 730
112-0309	33-335	LG 730
112-0316	198-086	LG 565
112-0316	591-938*	LG 407
112-0316	91-938*	LG 514
112-0317	75-021	LG 274
112-0423	45-257	LG 245
112-3691	198-063	LG 513
112-3691	598-640*	LG 405
112-3691	98-640*	LG 574
112-3692	98-061	LG 404
112-3692	98-637*	LG 512
112425	78-034	LG 822
112426	34-012	LG 821
112895	34-024	LG 822
112947	396-740*	LG 415
112947	596-319*	LG 415
112947	91-503	LG 424
112947	96-319*	LG 415
112-9759	94-063	LG 564
112-9759-03	94-063	LG 564
112-9759-03	96-382*	LG 564
11-3240	34-002	LG 821
113426	33-128-1	LG 741
113514	45-018	LG 247
113514	45-025	LG 247
113579	396-723*	LG 413
113579	596-323*	LG 453

X

2019 OEM X-Reference

OEM No.	OREGON	Page
TORO		
113579	91-502	LG 477
113579	96-323*	LG 477
113579-09	396-723*	LG 413
113579-09	596-323*	LG 453
113579-09	91-502	LG 477
113579-09	96-323*	LG 477
113997	33-113	LG 740
114-0434-03	394-075*	LG 571
114-0434-03	94-076	LG 571
114-0434-03	96-075*	LG 571
114-0435-03	394-075*	LG 571
114-0435-03	96-075*	LG 571
114-0454	15-049	LG 323
114-1625	394-129*	LG 441
114202	15-797	LG 320
114-4956	396-723*	LG 413
114-4956	594-085*	LG 564
114-4956	596-323*	LG 453
114-4956	96-323*	LG 477
114-4957	396-723*	LG 413
114-4957	594-085*	LG 564
114-4957	596-323*	LG 453
114-4957	96-323*	LG 477
114-4959	396-723*	LG 413
114-4959	594-085*	LG 564
114-4959	596-323*	LG 453
114-4959	94-085	LG 564
114-4959	96-323*	LG 477
114-4960	396-723*	LG 413
114-4960	594-085*	LG 564
114-4960	596-323*	LG 453
114-4960	96-323*	LG 477
114-4961	96-374*	LG 560
114-4962	96-374*	LG 560
114-4963	96-374*	LG 560
114-4964	96-374*	LG 560
114-4965	96-374*	LG 560
114594	33-031	LG 742
114775	07-312	LG 773
115-2454-03	396-803*	LG 438
115-2454-03	94-060*	LG 438
115-2454-03	96-803*	LG 567
115-4999	396-803*	LG 438
115-4999	94-060*	LG 438
115-4999	94-070	LG 438
115-4999	96-803*	LG 567
115-4999-03	396-803*	LG 438
115-4999-03	94-060*	LG 438
115-4999-03	94-070	LG 438
115-4999-03	96-803*	LG 567
115-5059	594-078*	LG 564
115-5059	94-063	LG 564
115-5059	94-128	LG 564
115-5059-03	594-078*	LG 564
115-5059-03	94-063	LG 564
115-5059-03	94-128	LG 564
115-5062-03	594-078*	LG 564
115-7426	15-050	LG 323
115-9613	115-146	LG 256
115-9650-03	396-803*	LG 438
115-9650-03	94-060*	LG 438
115-9650-03	96-803*	LG 567
116-0720	45-018	LG 247
116-0720	45-025	LG 247
116277	33-118-1	LG 733
116-6358-03	594-601*	LG 434
116-6358-S	594-601*	LG 434
117-0209-03	394-075*	LG 571
117-0209-03	94-077	LG 571
117-0209-03	96-075*	LG 571
117-5299	34-210	LG 834
117-5372-03	596-362*	LG 441
117-5372-03	94-069	LG 441
117-5372-03	96-362*	LG 570
117-7717	73-835	LG 849
11-9419	94-127	LG 569
119-8819	15-142	LG 323
119-8820	15-143	LG 323
120-2379	96-395*	LG 565
120-2379-03	96-395*	LG 565
12-0580	07-307	LG 770
12-0590	07-307	LG 770
1210	45-000	LG 237
121-1379	72-167	LG 1037
121-1380	72-168	LG 1037
121-4894	89-001	LG 590
12-5820	34-031	LG 821
125-9329-01	396-740*	LG 415
125-9329-01	596-319*	LG 415
125-9329-01	96-319*	LG 415
12-6700	34-003	LG 821
12-8140	33-393	LG 943
1-289-0030	30-846	LG 211
130-2861	92-168	LG 572
130-2862	92-167	LG 443
131-3939-03	394-129*	LG 441
131-3939-03P	394-129*	LG 441
131-4546-03	96-607*	LG 571
131-4547-03	96-607*	LG 571
1-323515	396-716*	LG 451
1-323515	596-310*	LG 447
1-323515	91-313	LG 494
1-323515	96-310*	LG 444
1-323744	15-144	LG 323
1-403149	396-716*	LG 451
1-403149	596-310*	LG 447
1-403149	91-368	LG 460
1-403149	96-310*	LG 444
14-1659	94-127	LG 569
14-1659	96-600*	LG 569
14-4879	91-804	LG 560
14-4889	94-032	LG 568
14-4889	94-602*	LG 568
14672	33-384	LG 947
14-7799	94-032	LG 568
14-7799	94-602*	LG 568
14-9419	94-127	LG 569
1-513645	07-392	LG 767
1594	15-798	LG 320
1-603299	72-311-1	LG 1039
1-613098	78-006	LG 828
1-633482	91-312	LG 478
1-633482	96-344*	LG 536
1-633485	91-181	LG 495
1-633485	96-344*	LG 536
1-633582	72-735	LG 1045
1-633818	72-736	LG 1045
1654930	07-392	LG 767
16-5649	72-168	LG 1037
17-0850	75-043	LG 312
18-1520	07-112	LG 774
18-520	07-112	LG 774
20-2720	94-017	LG 441
20-2860	07-307	LG 770
21-0890	15-799	LG 320
2119-127	45-091	LG 249
22-17	07-013	LG 773
22-4790	07-307	LG 770
23-0070	94-017	LG 441
23-0650	33-023	LG 949
23-0660	33-386	LG 942
23-2410	94-011	LG 572
23-2410-03	94-011	LG 572
23-3170	73-014	LG 849
23-3670	73-026	LG 851
23-3730	73-003	LG 847
23-4380	07-013	LG 773
23-7350	75-060	LG 322
23-9080	75-043	LG 312
24-1000-03	94-017	LG 441
244-63	34-012	LG 821
25-11257	45-227	LG 234
251-207	45-242	LG 243
251-210	45-000	LG 237
251-210S	45-000	LG 237
251-257	45-018	LG 247
251-257	45-025	LG 247
251-271	45-000	LG 237
251-297	45-259	LG 224
251-299	45-031	LG 232
251-318	45-259	LG 224
251-339	45-018	LG 247
251-342	45-018	LG 247
251-342	45-025	LG 247
251-351	45-295	LG 232
251-8	45-259	LG 224
251-82	45-018	LG 247
251-82	45-025	LG 247
254-78	45-205	LG 228
254-79	45-206	LG 231
254-94	45-002	LG 237
25-5880	34-027	LG 821
25-6420	33-023	LG 949
25-6430	75-060	LG 322
26-0880	94-017	LG 441
26-1840	78-044-1	LG 834
26-7630	07-013	LG 773
26-9670	75-043	LG 312
26-9670-09	75-043	LG 312
26-9672	15-051	LG 250
27-0230	75-043	LG 312
27-0990	94-018	LG 565
27-0990	94-618*	LG 506
27-0990-03	94-018	LG 565
27-0990-03	94-618*	LG 506
27-0990-09	94-018	LG 565
27-0990-09	94-618*	LG 506
27-1160	75-165	LG 322
271160-09	75-165	LG 322
27-1160-09	75-165	LG 322
27-7110	30-026	LG 208
27-7350	75-060	LG 322
27-7860	07-307	LG 770
27-7870	07-307	LG 770
27-7871	07-307	LG 770
27-7872	07-307	LG 770
28-4210	33-334	LG 730
28-4210	33-335	LG 730
28-4210	33-336	LG 730
28-6270	33-023	LG 949
28-9680	07-307	LG 770
29-4820	72-029	LG 1042
29-5530	94-011	LG 572
29-5530	96-602*	LG 572
29-5530-03	94-011	LG 572
29-5530-03	96-602*	LG 572
29-5560	33-023	LG 949
30-0860	07-112	LG 774
30227	91-502	LG 477
304-71	07-400	LG 767
31-0530	45-295	LG 232
31-9130	07-400	LG 767
3290-259	04-721	
3290-320	04-723	
3290-337	04-721	
32-9250	07-112	LG 774
33-1300	30-025	LG 208
33-4750	94-021	LG 573
33-4750-03	94-021	LG 573
3370	45-205	LG 228
3-3866	73-038	LG 851
3-4243	34-030	LG 821
3-4244	34-005	LG 821
34-6820	49-816	LG 612
34-7260	07-206	LG 776
36-3220	34-020	LG 821
36-3220	78-044-1	LG 834
37-2610	33-384	LG 947
3-7274	75-075	LG 322
3-7512	73-026	LG 851
37-7300	07-013	LG 773
37-9080	75-980	LG 863
38-1420	45-000	LG 237
38-3000	07-013	LG 773
3-8615	94-017	LG 441
38-7820	45-257	LG 245
39-1540	73-026	LG 851
3-9283	73-026	LG 851
39-9160	51-013	LG 725
403148	91-368	LG 460
40-5940	33-023	LG 949
40-8160	73-038	LG 851
40-8160-01	73-038	LG 851
41-1010	49-021	LG 629
41-8040	49-812	LG 612
42-0680	07-013	LG 773
42-0883	75-938	LG 250
42-0884	75-938	LG 250
42-1000	94-017	LG 441
42-1000-03	94-017	LG 441
42-5240	07-101	LG 775
43-1040	34-017	LG 821
43-9660	07-206	LG 776
43-9730	55-227	LG 191
44-5480	94-018	LG 565
44-5480	94-039	LG 561
44-5480	94-615*	LG 370
44-5480	94-618*	LG 506
44-5480-03	94-018	LG 565
44-6250	94-019	LG 570
44-6250	94-621*	LG 570
44-6250-03	94-019	LG 570
44-6250-03	94-621*	LG 570
44-6260	75-373	LG 322
448990	15-800	LG 320
45-3030	49-810	LG 612
45-3031	49-812	LG 612
45-3120	55-333	LG 633
45-3200	49-816	LG 612
46-3960	55-227	LG 191
46-4740	49-816	LG 612
46-4750	49-816	LG 612
46-5650	34-210	LG 834
46-6560	07-392	LG 767
468530	45-002	LG 237
46-8530	45-002	LG 237
47-1410	15-801	LG 321
471910	33-334	LG 730
47-1910	33-334	LG 730
47-1910	33-335	LG 730
47-1910	33-336	LG 730
47-6320	30-931	LG 191
49-1540	73-026	LG 851
4999	45-000	LG 237
5-0751	94-017	LG 441
51-3530	75-274	LG 322
51-4160	78-680	LG 840
51-4160-03	78-680	LG 840
51-4260	48-148	LG 695
51-4290	75-205	LG 322
51-4290-09	75-205	LG 322
514291	15-802	LG 321
518213	45-000	LG 237
52-0240	94-061	LG 561
52-0240	96-724*	LG 430
52-0250	96-724*	LG 430
52-0260	96-724*	LG 430
5-2045	07-307	LG 770
52-2450	45-025	LG 247

X

* OREGON® Gator™ replacement blade

TORO

OEM No.	OREGON	Page
52-7060	73-026	LG 851
5-3348	73-026	LG 851
5-3460	07-307	LG 770
5-3462	07-307	LG 770
53-7740	70-422	LG 964
539660	15-803	LG 321
54-0010	94-026	LG 369
54-0010	94-615*	LG 370
54-0010-03	94-026	LG 369
54-0010-03	94-615*	LG 370
54-0010-09	94-026	LG 369
54-0010-09	94-615*	LG 370
54-2750	75-275	LG 322
54-2750-09	75-275	LG 322
5-4505	75-075	LG 322
54-9921	73-023	LG 847
55-3550	07-312	LG 773
55-3570	07-312	LG 773
55-3571	07-312	LG 773
554940	94-026	LG 369
55-4940	94-039	LG 561
55-4940	94-615*	LG 370
55-4940-03	94-039	LG 561
55-4940-03	94-615*	LG 370
55-4940-09	94-039	LG 561
55-4940-09	94-615*	LG 370
55-7520	33-500-0	LG 744
55-7660	15-804	LG 321
55-8260	34-020	LG 821
55-8260	78-044-1	LG 834
55-8760	73-018	LG 849
55-9250	73-046	LG 847
55-9251	73-046	LG 847
55-9300	75-066	LG 251
56-2390	94-022	LG 565
56-2390	94-618*	LG 506
56-2390-03	94-022	LG 565
56-2390-03	94-618*	LG 506
56-2390-09	94-022	LG 565
56-2390-09	94-618*	LG 506
56-6110	07-312	LG 773
56-6360	07-101	LG 775
570240	15-805	LG 321
57-0250	94-063	LG 564
57-4700	94-038	LG 568
57-4700	94-602*	LG 568
57-4700-03	94-038	LG 568
57-4700-03	94-602*	LG 568
57-4700-09	94-038	LG 568
57-4700-09	94-602*	LG 568
5942	34-027	LG 821
59534	96-607*	LG 571
59534P	96-607*	LG 571
5-9870	34-008	LG 821
612543	92-011	LG 490
612543-01	92-011	LG 490
612543-03	92-011	LG 490
61-3400	75-075	LG 322
61-8050	45-025	LG 247
61-9760	72-306	LG 1038
62-4520	78-044-1	LG 834
62-4520-03	78-044-1	LG 834
62-4530	34-034	LG 821
62-7700	94-127	LG 569
62-7700	96-600*	LG 569
62-7700-03	94-127	LG 569
62-7700-03	96-600*	LG 569
62-7700-03P	94-127	LG 569
62-7700-03P	96-600*	LG 569
633484	91-335	LG 420
633582	72-735	LG 1045
63397	72-736	LG 1045
633971	72-736	LG 1045
63-5630	33-386	LG 942
63-9380	30-959	LG 219
644251	72-736	LG 1045
67-1390	15-807	LG 321
6719	78-034	LG 822
6769	34-020	LG 821
6769	78-044-1	LG 834
67-8110	83-012	LG 819
67-8110-09	83-012	LG 819
68-2730	72-311-1	LG 1039
683637	33-500-0	LG 744
683682	92-011	LG 490
684380	92-011	LG 490
684708	33-500-0	LG 744
696220	15-809	LG 321
69-6920	94-029	LG 414
69-6920	94-620*	LG 414
69-6920-03	94-029	LG 414
7-0056	34-002	LG 821
7-0136	34-005	LG 821
7-0431	34-037	LG 821
7-0823	34-034	LG 821
71-5380	75-192	LG 251
71-5381	75-192	LG 251
71-5390	73-019	LG 849
71-5960	07-103	LG 775
73-5850	45-257	LG 245
740207	33-334	LG 730
740207	33-335	LG 730
740207	33-336	LG 730
741330	15-810	LG 321
74-1791	46-334	LG 719
7434	34-012	LG 821
7451	34-038	LG 821
75-8780	73-036	LG 849
75-9010	75-225	LG 322
75-9090	73-037	LG 847
75-9420	94-127	LG 569
75-9420	96-600*	LG 569
77-7440	49-132	LG 749
77-8200	49-300	LG 626
77-8210	49-300	LG 626
77-8510	31-904	LG 930
77-8510	31-907	LG 929
77-8520	31-907	LG 929
77-8560	43-014	LG 932
77-8930	49-304	LG 603
77-9270	43-014	LG 932
79-1720	94-032	LG 568
79-1720	94-602*	LG 568
79220	394-129*	LG 441
79220P	394-129*	LG 441
79-2920	91-804	LG 560
79-2920-03	91-804	LG 560
79-3060	94-032	LG 568
79-3060	94-602*	LG 568
79-3061	94-032	LG 568
79-3061	94-602*	LG 568
79-3061-03	94-032	LG 568
79-3061-03	94-602*	LG 568
79-8930	49-300	LG 626
80-0660	73-037	LG 847
80-660	73-037	LG 847
81-0100	30-954	LG 220
81-4120	30-421	LG 220
8205	34-030	LG 821
822390	15-812	LG 321
82-4110	15-813	LG 321
826420	15-814	LG 321
83-1320	07-111	LG 776
8411	15-815	LG 321
84-1980	73-037	LG 847
8462	71-104	LG 956
84-9120	46-335	LG 719
8510	34-036	LG 821
85-6040	94-040	LG 573
85-6040	96-705*	LG 573
85-6040-03	94-040	LG 573
85-6040-03	96-705*	LG 573
86-0010	94-043	LG 568
86-0010	96-701*	LG 568
86-0010-03	94-043	LG 568
86-0010-03	96-701*	LG 568
88-0771	73-046	LG 847
88-0781	73-023	LG 847
88-4400	45-000	LG 237
88-4430	94-021	LG 573
88-4430-03	94-021	LG 573
91-2256	94-127	LG 569
91-2256	96-600*	LG 569
91-2256-03	94-127	LG 569
91-2256-03	96-600*	LG 569
91-2256-03P	94-127	LG 569
91-2256-03P	96-600*	LG 569
91-2256-03-PLT	94-127	LG 569
91-2256-03-PLT	96-600*	LG 569
91-2258	75-684	LG 322
91-3106	94-051	LG 570
91-3106	96-660*	LG 441
925588	15-820	LG 321
92-5608	94-045	LG 571
92-5608	96-708*	LG 571
92-5608-03	94-045	LG 571
92-5608-03	96-708*	LG 571
92-6328	33-384	LG 947
92-6787	33-002	LG 946
92-6788	33-002	LG 946
92-7103	34-032	LG 834
92-7104	34-039	LG 834
92-7952	94-061	LG 561
92-7952	94-615*	LG 370
92-7952-03	94-061	LG 561
92-7952-03	94-615*	LG 370
92-7952-09	94-061	LG 561
92-7952-09	94-615*	LG 370
92-7961	94-618*	LG 506
92-7961-03	94-618*	LG 506
92-7961-09	94-618*	LG 506
92-9328	33-384	LG 947
93-1622	78-044-1	LG 834
93-3160	33-113	LG 740
93-3884	15-821	LG 321
93-4106	94-051	LG 570
93-4106-03	94-051	LG 570
93-4106-03	96-660*	LG 441
93-4106-03P	94-051	LG 570
93-4106-03P	96-660*	LG 441
93-4813	45-205	LG 228
93-9998	33-002	LG 946
93-9999	33-002	LG 946
94-1861	94-059	LG 564
94-1861	94-064	LG 565
94-1861-03	94-060*	LG 438
94-2501	15-788	LG 320
94-2690	07-111	LG 776
94-2697	33-002	LG 946
94-4632	33-189	LG 740
94-6136	33-119-1	LG 734
95-4108	33-002	LG 946
95-5574	30-957	LG 209
95-6151	75-939	LG 322
95-7489	33-002	LG 946
98-0710	15-807	LG 321
98-3764	15-824	LG 321
98-3780	15-825	LG 321
99-0913	49-132	LG 749
99-1584	60-531	LG 720
99-3877	82-674	LG 904
99-3904	15-826	LG 321
99-4627	15-827	LG 322
99-4640	82-676	LG 904
99-4647	15-828	LG 322
99-4944	82-675	LG 904
99-7162	45-018	LG 247
99-7162	45-025	LG 247
99-8012	33-128-1	LG 741
99-9313	73-046	LG 847
E323515	396-716*	LG 451
E323515	596-310*	LG 447
E323515	91-313	LG 494
E323515	96-310*	LG 444
E403149	396-716*	LG 451
E403149	596-310*	LG 447
E403149	91-368	LG 460
E403149	96-310*	LG 444
E513645	07-392	LG 767
E633482	91-312	LG 478
E633482	96-344*	LG 536
E633485	91-181	LG 495
E633485	96-344*	LG 536
E633582	72-735	LG 1045
E633791	72-736	LG 1045
E633818	72-736	LG 1045
MW8821	34-005	LG 821
NN10143	83-283	LG 818
NN10143	83-403	LG 818
NN10147	83-283	LG 818
NN10147	83-403	LG 818
NN10175	30-430	LG 211
NN10175	30-846	LG 211
NN10213	07-103	LG 775
NN10277	33-035	LG 742
NN10466	07-103	LG 775
NN10506	07-103	LG 775
NN10684	69-282	LG 817
NN10684	83-282	LG 817
NN10684	83-402	LG 817
NN10774	30-430	LG 211
NN10774	30-846	LG 211
NN10819	69-282	LG 817
NN10819	83-282	LG 817
NN10819	83-402	LG 817
NN10896	30-430	LG 211
NN10896	30-846	LG 211
PL7329	91-502	LG 477
T7112	89-001	LG 590

TORO-WHEELHORSE

OEM No.	OREGON	Page
01-102-0130	45-205	LG 228
01-103-0060	45-206	LG 231
01-103-0130	45-206	LG 231
01-289-0030	30-430	LG 211
100078	71-104	LG 956
10-0230	75-043	LG 312
100-3297-03	73-837	LG 802
100-3298-03	73-836	LG 802
100-3976	82-674	LG 904
100-5038	49-300	LG 626
101143	34-032	LG 834
101144	34-039	LG 834
101762	34-032	LG 834
101762	34-039	LG 834
101763	34-032	LG 834
102119	60-184	LG 720
102742	15-788	LG 320
103-2683	46-332	LG 720
103282	45-205	LG 228
10-3345	75-625	LG 313
103990	33-389	LG 945
104047	07-392	LG 767
104047P	07-392	LG 767
104144	34-032	LG 834
104-2753	73-023	LG 847
104-2874	45-000	LG 237
1046397	15-789	LG 320
1046398	15-790	LG 320

X

* OREGON® Gator™ replacement blade

2019 OEM X-Reference

TORO-WHEELHORSE

OEM No.	OREGON	Page
104-7550	49-300	LG 626
1048152	15-791	LG 320
104-8497	94-322	LG 520
104974	34-032	LG 834
104975	34-039	LG 834
105-1671	33-189	LG 740
105-1688	82-675	LG 904
105-1844	60-529	LG 720
105-1845	60-530	LG 720
105-3036	72-166	LG 1037
105450	71-104	LG 956
105-7350	75-888	LG 322
105874	34-009	LG 821
105-8783	75-887	LG 323
106-0888	60-428	LG 720
106125	15-792	LG 320
106144	34-019	LG 821
106396	71-104	LG 956
106-4588-01	73-028	LG 850
106-7369	15-016	LG 323
106-8300	60-531	LG 720
106947	45-295	LG 232
107963	71-511	LG 956
108-2693	15-137	LG 323
108-2694	15-138	LG 323
108-2715	15-139	LG 323
108-2716	15-140	LG 323
108335	83-300	LG 819
108-3808	30-025	LG 208
108-3831	07-112	LG 774
108-3833	30-026	LG 208
108483	45-000	LG 237
108522	72-316	LG 1042
108798	72-309	LG 1042
109101	33-033	LG 742
109828	78-032	LG 822
109842	45-295	LG 232
109966	45-257	LG 245
110162	33-334	LG 730
110370	34-031	LG 821
110-5049	15-141	LG 323
110506	72-316	LG 1042
110513	45-000	LG 237
1106774	15-794	LG 320
110-6775	78-033	LG 834
110-6871	115-145	LG 323
110-6892	15-795	LG 320
110771	35-021	LG 810
110774	35-021	LG 810
110-8837	45-266	LG 247
111216	33-389	LG 945
111474	07-315	LG 772
11-1560	34-008	LG 821
111674	33-330	LG 729
112-0302	98-061	LG 404
112-0317	75-021	LG 274
112425	78-034	LG 822
112426	34-012	LG 821
112895	34-024	LG 822
11-3240	34-002	LG 821
113426	33-128-1	LG 741
113514	45-018	LG 247
113997	33-113	LG 740
114-0454	15-049	LG 323
114202	15-797	LG 320
114594	33-031	LG 742
114775	07-312	LG 773
115-7426	15-050	LG 323
115-9613	115-146	LG 256
116277	33-118-1	LG 733
117-5299	34-210	LG 834
117-7717	73-835	LG 849
119-8819	15-142	LG 323
119-8820	15-143	LG 323
12-0580	07-307	LG 770
12-0590	07-307	LG 770
121-1379	72-167	LG 1037
121-1380	72-168	LG 1037
121-4894	89-001	LG 590
12-5820	34-031	LG 821
12-6700	34-003	LG 821
12-8140	33-393	LG 943
1-289-0030	30-846	LG 211
1-323744	15-144	LG 323
1-513645	07-392	LG 767
1594	15-798	LG 320
1-603299	72-311-1	LG 1039
1-633582	72-735	LG 1045
1-633818	72-736	LG 1045
1654930	07-392	LG 767
17-0850	75-043	LG 312
18-1520	07-112	LG 774
20-2860	07-307	LG 770
21-0890	15-799	LG 320
2119-127	45-091	LG 249
22-17	07-013	LG 773
22-4790	07-307	LG 770
23-0650	33-023	LG 949
23-0660	33-386	LG 942
23-3170	73-014	LG 849
23-3670	73-026	LG 851
23-3730	73-003	LG 847
23-4380	07-013	LG 773
23-7350	75-060	LG 322
23-9080	75-043	LG 312
244-63	34-012	LG 821
25-11257	45-227	LG 234
251-207	45-242	LG 243
251-210	45-000	LG 237
251-257	45-018	LG 247
251-271	45-000	LG 237
251-297	45-259	LG 224
251-299	45-031	LG 232
251-318	45-259	LG 224
251-339	45-018	LG 247
251-351	45-295	LG 232
251-8	45-259	LG 224
254-78	45-205	LG 228
254-79	45-206	LG 231
25-5880	34-027	LG 821
25-6420	33-023	LG 949
25-6430	75-060	LG 322
26-1840	78-044-1	LG 834
26-7630	07-013	LG 773
26-9670	75-043	LG 312
26-9670-09	75-043	LG 312
26-9672	15-051	LG 250
27-0230	75-043	LG 312
27-1160	75-165	LG 322
27-1160-09	75-165	LG 322
27-7110	30-026	LG 208
27-7350	75-060	LG 322
27-7860	07-307	LG 770
27-7870	07-307	LG 770
27-7871	07-307	LG 770
27-7872	07-307	LG 770
28-4210	33-334	LG 730
28-4210	33-336	LG 730
28-6270	33-023	LG 949
28-9680	07-307	LG 770
29-4820	72-029	LG 1042
29-5560	33-023	LG 949
30-0860	07-112	LG 774
304-71	07-400	LG 767
31-0530	45-295	LG 232
31-9130	07-400	LG 767
3290-259	04-721	
3290-320	04-723	
3290-337	04-721	
32-9250	07-112	LG 774
33-1300	30-025	LG 208
3370	45-205	LG 228
3-3866	73-038	LG 851
3-4243	34-030	LG 821
3-4244	34-005	LG 821
34-6820	49-816	LG 612
34-7260	07-206	LG 776
36-3220	34-020	LG 821
36-3220	78-044-1	LG 834
37-2610	33-384	LG 947
3-7274	75-075	LG 322
3-7512	73-026	LG 851
37-7300	07-013	LG 773
37-9080	75-980	LG 863
38-1420	45-000	LG 237
38-3000	07-013	LG 773
38-7820	45-257	LG 245
39-1540	73-026	LG 851
3-9283	73-026	LG 851
39-9160	51-013	LG 725
40-5940	33-023	LG 949
40-8160	73-038	LG 851
40-8160-01	73-038	LG 851
41-1010	49-021	LG 629
41-8040	49-812	LG 612
42-0680	07-013	LG 773
42-0883	75-938	LG 250
42-0884	75-938	LG 250
42-5240	07-101	LG 775
43-1040	34-017	LG 821
43-9660	07-206	LG 776
43-9730	55-227	LG 191
44-6260	75-373	LG 322
448990	15-800	LG 320
45-3030	49-810	LG 612
45-3031	49-812	LG 612
45-3120	55-333	LG 633
45-3200	49-816	LG 612
46-3960	55-227	LG 191
46-4740	49-816	LG 612
46-4750	49-816	LG 612
46-6560	07-392	LG 767
46-8530	45-002	LG 237
47-1410	15-801	LG 321
47-1910	33-334	LG 730
47-6320	30-931	LG 191
49-1540	73-026	LG 851
4999	45-000	LG 237
51-3530	75-274	LG 322
51-4160	78-680	LG 840
51-4160-03	78-680	LG 840
51-4260	48-148	LG 695
51-4290	75-205	LG 322
51-4290-09	75-205	LG 322
514291	15-802	LG 321
518213	45-000	LG 237
5-2045	07-307	LG 770
52-2450	45-025	LG 247
52-7060	73-026	LG 851
5-3348	73-026	LG 851
5-3460	07-307	LG 770
5-3462	07-307	LG 770
53-7740	70-422	LG 964
539660	15-803	LG 321
54-2750	75-275	LG 322
54-2750-09	75-275	LG 322
5-4505	75-075	LG 322
54-9921	73-023	LG 847
55-3550	07-312	LG 773
55-3570	07-312	LG 773
55-3571	07-312	LG 773
55-7520	33-500-0	LG 744
55-7660	15-804	LG 321
55-8260	34-020	LG 821
55-8260	78-044-1	LG 834
55-8760	73-018	LG 849
55-9250	73-046	LG 847
55-9251	73-046	LG 847
55-9300	75-066	LG 251
56-6110	07-312	LG 773
56-6360	07-101	LG 775
570240	15-805	LG 321
5942	34-027	LG 821
5-9870	34-008	LG 821
61-8050	45-025	LG 247
61-9760	72-306	LG 1038
62-4520	78-044-1	LG 834
62-4530	34-034	LG 821
633582	72-735	LG 1045
633971	72-736	LG 1045
63-5630	33-386	LG 942
63-9380	30-959	LG 219
67-1390	15-807	LG 321
6719	78-034	LG 822
6769	34-020	LG 821
67-8110	83-012	LG 819
67-8110-09	83-012	LG 819
68-2730	72-311-1	LG 1039
696220	15-809	LG 321
7-0056	34-002	LG 821
7-0136	34-005	LG 821
7-0431	34-037	LG 821
7-0823	34-034	LG 821
71-5380	75-192	LG 251
71-5381	75-192	LG 251
71-5390	73-019	LG 849
71-5960	07-103	LG 775
740207	33-334	LG 730
741330	15-810	LG 321
74-1791	46-334	LG 719
7434	34-012	LG 821
7451	34-038	LG 821
75-8780	73-036	LG 849
75-9010	75-225	LG 322
75-9090	73-037	LG 847
77-7440	49-132	LG 749
77-8200	49-300	LG 626
77-8210	49-300	LG 626
77-8510	31-904	LG 930
77-8510	31-907	LG 929
77-8560	43-014	LG 932
77-8930	49-304	LG 603
77-9270	43-014	LG 932
79-8930	49-300	LG 626
80-0660	73-037	LG 847
80-660	73-037	LG 847
81-0100	30-954	LG 220
81-4120	30-421	LG 220
8205	34-030	LG 821
822390	15-812	LG 321
82-4110	15-813	LG 321
826420	15-814	LG 321
83-1320	07-111	LG 776
8411	15-815	LG 321
84-1980	73-037	LG 847
8462	71-104	LG 956
84-9120	46-335	LG 719
8510	34-036	LG 821
88-0771	73-046	LG 847
88-0781	73-023	LG 847
88-4400	45-000	LG 237
91-2258	75-684	LG 322
925588	15-820	LG 321
92-5789	86-002	LG 781
92-6328	33-384	LG 947
92-6787	33-002	LG 946
92-6788	33-002	LG 946
92-7103	34-032	LG 834
93-3160	33-113	LG 740

X

* OREGON® Gator™ replacement blade

OEM No.	OREGON	Page
TORO-WHEELHORSE		
93-3884	15-821	LG 321
93-4106	94-051	LG 570
93-4813	45-205	LG 228
93-9998	33-002	LG 946
93-9999	33-002	LG 946
94-2501	15-788	LG 320
94-2690	07-111	LG 776
94-4632	33-189	LG 740
94-6136	33-119-1	LG 734
95-4108	33-002	LG 946
95-5574	30-957	LG 209
95-6151	75-939	LG 322
95-7489	33-002	LG 946
98-0710	15-807	LG 321
98-3764	15-824	LG 321
98-3780	15-825	LG 321
99-0913	49-132	LG 749
99-3877	82-674	LG 904
99-3904	15-826	LG 321
99-4627	15-827	LG 322
99-4640	82-676	LG 904
99-4647	15-828	LG 322
99-4944	82-675	LG 904
99-8012	33-128-1	LG 741
99-9313	73-046	LG 847
E513645	07-392	LG 767
E633582	72-735	LG 1045
E633791	72-736	LG 1045
E633818	72-736	LG 1045
MW8821	34-005	LG 821
NN10143	83-283	LG 818
NN10143	83-403	LG 818
NN10147	83-283	LG 818
NN10147	83-403	LG 818
NN10175	30-430	LG 211
NN10175	30-846	LG 211
NN10213	07-103	LG 775
NN10277	33-035	LG 742
NN10466	07-103	LG 775
NN10506	07-103	LG 775
NN10684	69-282	LG 817
NN10684	83-282	LG 817
NN10684	83-402	LG 817
NN10774	30-430	LG 211
NN10774	30-846	LG 211
NN10819	69-282	LG 817
NN10819	83-282	LG 817
NN10819	83-402	LG 817
NN10896	30-430	LG 211
NN10896	30-846	LG 211
T7112	89-001	LG 590
TRACTOR SUPPLY		
110883	75-108	LG 289
37X57	75-057	LG 307
37X61	75-061	LG 307
754-0145	75-145	LG 300
754-0151	75-004	LG 301
754-0935	75-092	LG 304
954-0145	75-145	LG 300
954-0145A	75-145	LG 300
954-0151	75-004	LG 301
954-015A	75-145	LG 300
954-0935	75-092	LG 304
TRAILMATE		
11109	45-295	LG 232
11972	71-108	LG 957
TRIMMER		
20202	45-257	LG 245
25202	45-257	LG 245

OEM No.	OREGON	Page
TROY-BILT		
613223	40-143	LG 587
753-0080-0637	40-004	LG 588
753-06561	40-004	LG 588
791-613223	40-143	LG 587
791-613223B	40-143	LG 587
TROY-BILT (ALSO SEE MTD)		
1128-1	75-685	LG 324
1185574	45-295	LG 232
1185651	15-829	LG 324
1270-1A	84-102	LG 954
1270-2A	84-103	LG 954
1714	45-205	LG 228
1719859	83-300	LG 819
1720859	76-067-0	LG 726
1726450	83-300	LG 819
1743875	15-837	LG 324
1744706	15-833	LG 324
1748723	33-015	LG 948
1751328	33-026	LG 947
1751328	33-028	LG 947
1754250	33-397	LG 942
1754250P	33-397	LG 942
1755537	15-837	LG 324
1755539	15-838	LG 324
1755565	15-836	LG 324
1764007	15-837	LG 324
1764009	15-838	LG 324
1769767	75-277	LG 324
1770334	75-378	LG 324
1772388	33-112	LG 735
1830258	15-839	LG 324
1874139	83-301	LG 816
1901118	84-101	LG 954
1901118A	84-101	LG 954
1902325	75-380	LG 324
1909404	75-278	LG 324
490-100-M084	198-049	LG 518
490-100-M084	598-631*	LG 390
490-100-M084	98-631*	LG 390
490-110-C131	96-401*	LG 404
490-110-C131	98-096	LG 404
490-110-M108	598-629*	LG 575
490-110-M108	98-093	LG 411
490-110-M108	98-629*	LG 412
490-110-M115	198-059	LG 403
490-110-M115	598-629*	LG 575
490-110-M115	98-629*	LG 412
703809	45-206	LG 231
721-04031	49-051	LG 954
741-7107	45-205	LG 228
742-0171	98-037	LG 574
742-0171B	98-037	LG 574
742-04043	598-640*	LG 405
742-04043	98-640*	LG 574
742-04087	198-153	LG 520
742-04087	598-629*	LG 575
742-04087	98-629*	LG 412
742-04118-0637	84-103	LG 954
742-04119-0637	84-102	LG 954
742-04125-X	598-640*	LG 405
742-04125-X	98-640*	LG 574
742-04154	98-094	LG 514
742-04154	98-671*	LG 514
742-04154A	98-094	LG 514
742-04154A	98-671*	LG 514
742-04244	96-401*	LG 404
742-04244	98-096	LG 404
742-04244A	96-401*	LG 404
742-04244A	98-096	LG 404
742-04290	96-401*	LG 404
742-04290	98-096	LG 404
742-04290-X	96-401*	LG 404
742-04308	598-629*	LG 575

OEM No.	OREGON	Page
742-04308	98-093	LG 411
742-04308	98-629*	LG 412
742-04312	598-629*	LG 575
742-04312	98-629*	LG 412
742-04361	96-401*	LG 404
742-04410	598-629*	LG 575
742-04410	98-629*	LG 412
742-0542	98-057	LG 513
742-0611	198-063	LG 513
742-0611	598-640*	LG 405
742-0611	98-640*	LG 574
742-0611A	198-063	LG 513
742-0611A	598-640*	LG 405
742-0611A	98-640*	LG 574
742-0611-X	598-640*	LG 405
742-0611-X	98-640*	LG 574
7420616	198-059	LG 403
7420616	598-629*	LG 575
7420616	98-629*	LG 412
742-0616A	198-059	LG 403
742-0616A	598-629*	LG 575
742-0616A	98-629*	LG 412
742-0644	98-054	LG 574
742-0644	98-634*	LG 405
742-0656	598-629*	LG 575
742-0656	98-093	LG 411
742-0656	98-629*	LG 412
742-0739	92-140	LG 516
742-0741	198-049	LG 518
742-0741	598-631*	LG 390
742-0741	98-631*	LG 390
742-0741A	198-049	LG 518
742-0741A	598-631*	LG 390
742-0741A	98-631*	LG 390
742-4360	598-629*	LG 575
742-4360	98-629*	LG 412
754-04122	15-025	LG 255
754-04142	15-026	LG 277
754-04201	15-052	LG 315
754-04219	15-027	LG 306
754-04240	15-028	LG 277
917-1459	33-112	LG 735
921-04031	49-051	LG 954
9245	75-686	LG 324
925-3169A	33-026	LG 947
925-3169A	33-028	LG 947
941-0107	45-205	LG 228
942-0171B	98-037	LG 574
942-04087	198-153	LG 520
942-04087	598-629*	LG 575
942-04087	98-629*	LG 412
942-04125-X	598-640*	LG 405
942-04125-X	98-640*	LG 574
942-04154	98-094	LG 514
942-04154	98-671*	LG 514
942-04154A	98-094	LG 514
942-04154A	98-671*	LG 514
942-04244	96-401*	LG 404
942-04244	98-096	LG 404
942-04244A	96-401*	LG 404
942-04244A	98-096	LG 404
942-04244A-X	96-401*	LG 404
942-04244-X	96-401*	LG 404
942-04290	96-401*	LG 404
942-04290	98-096	LG 404
942-04308	598-629*	LG 575
942-04308	98-093	LG 411
942-04308	98-629*	LG 412
942-04308-X	598-629*	LG 575
942-04308-X	98-629*	LG 412
942-04312	598-629*	LG 575
942-04312	98-629*	LG 412
942-04312-X	598-629*	LG 575
942-04312-X	98-629*	LG 412
942-04360-0684	598-629*	LG 575

OEM No.	OREGON	Page
942-04360-0684	98-629*	LG 412
942-04361	96-401*	LG 404
942-04410	598-629*	LG 575
942-04410	98-629*	LG 412
942-04410-0684	598-629*	LG 575
942-04410-0684	98-629*	LG 412
942-0542	98-057	LG 513
942-0611	198-063	LG 513
942-0611	598-640*	LG 405
942-0611	98-640*	LG 574
942-0611A	198-063	LG 513
942-0611A	598-640*	LG 405
942-0611A	98-640*	LG 574
942-0611-X	598-640*	LG 405
942-0611-X	98-640*	LG 574
942-0616	198-059	LG 403
942-0616	598-629*	LG 575
942-0616	98-629*	LG 412
942-0616A	198-059	LG 403
942-0616A	598-629*	LG 575
942-0616A	98-629*	LG 412
942-0616-X	598-629*	LG 575
942-0616-X	98-629*	LG 412
942-0641	198-049	LG 518
942-0641	598-631*	LG 390
942-0641	98-631*	LG 390
942-0644	98-054	LG 574
942-0644	98-634*	LG 405
942-0656	598-629*	LG 575
942-0656	98-093	LG 411
942-0656	98-629*	LG 412
942-0739	92-140	LG 516
942-4360	598-629*	LG 575
942-4360	98-629*	LG 412
954-04093	15-053	LG 305
954-04122	15-025	LG 255
954-04142	15-026	LG 277
954-04176A	15-054	LG 324
954-04201	15-052	LG 315
954-04201A	15-052	LG 315
954-04219	15-027	LG 306
954-04240	15-028	LG 277
9618	49-050	LG 954
9621	49-051	LG 954
GW-1714	45-205	LG 228
GW-1744706	15-833	LG 324
GW-1755565	15-836	LG 324
GW-1764007	15-837	LG 324
GW-1764009	15-838	LG 324
GW56035	75-686	LG 324
GW-602	49-051	LG 954
GW-644	49-051	LG 954
GW-7420616	198-059	LG 403
GW-7420616	598-629*	LG 575
GW-7420616	98-629*	LG 412
GW-9245	75-686	LG 324
GW-9601	49-051	LG 954
GW-9609	49-051	LG 954
GW-9621	49-051	LG 954
GW-B1744706	15-833	LG 324
GW-B1755537	15-837	LG 324
GW-B1755565	15-836	LG 324
OEM-742-0171B	98-037	LG 574
OEM-742-04308	598-629*	LG 575
OEM-742-04308	98-093	LG 411
OEM-742-04308	98-629*	LG 412
OEM-742-0616	198-059	LG 403
OEM-742-0616	598-629*	LG 575
OEM-742-0616	98-629*	LG 412
OEM-742-0741	198-049	LG 518
OEM-742-0741	598-631*	LG 390
OEM-742-0741	98-631*	LG 390
T1769767	75-277	LG 324

X

* OREGON® Gator™ replacement blade

2019 OEM X-Reference

OEM No.	OREGON	Page
TRU CUT		
20202	45-257	LG 245
25202	45-257	LG 245
T11275	45-257	LG 245
UNICO		
754-0145	75-145	LG 300
754-0151	75-004	LG 301
754-0201	75-441	LG 334
754-0234	75-441	LG 334
754-0935	75-092	LG 304
954-0145	75-145	LG 300
954-0145A	75-145	LG 300
954-0151	75-004	LG 301
954-015A	75-145	LG 300
954-0201	75-441	LG 334
954-0234	75-441	LG 334
954-0935	75-092	LG 304
UNITED HARDWARE DIST		
754-0145	75-145	LG 300
754-0201	75-441	LG 334
754-0230	75-008	LG 301
754-0234	75-441	LG 334
754-0240	75-009	LG 301
754-0241	75-012	LG 301
UNITED HARDWARE DIST		
754-0266	75-016	LG 301
754-0293	75-018	LG 301
754-0329	75-145	LG 300
954-0145	75-145	LG 300
954-0145A	75-145	LG 300
954-015A	75-145	LG 300
954-0201	75-441	LG 334
954-0230	75-008	LG 301
954-0234	75-441	LG 334
954-0240	75-009	LG 301
954-0241	75-012	LG 301
954-0241A	75-012	LG 301
954-0266	75-016	LG 301
954-0266A	75-016	LG 301
954-0293	75-018	LG 301
UNITED TECHNOLOGIES		
4367240	33-721	LG 920
4379040	33-721	LG 920
SM10795	33-720	LG 920
SMH12B81	33-720	LG 920
VAL-TEST DISTRIBUTORS		
754-0145	75-145	LG 300
754-0151	75-004	LG 301
754-0201	75-441	LG 334
754-0234	75-441	LG 334
754-0935	75-092	LG 304
954-0145	75-145	LG 300
954-0145A	75-145	LG 300
954-0151	75-004	LG 301
954-015A	75-145	LG 300
954-0201	75-441	LG 334
954-0234	75-441	LG 334
954-0935	75-092	LG 304
VAN CAMP HARDWARE		
754-0151	75-004	LG 301
754-0194	75-090	LG 301
954-0151	75-004	LG 301
954-0194	75-090	LG 301
VANLEUNEN'S INC.		
754-0151	75-004	LG 301
954-0151	75-004	LG 301

OEM No.	OREGON	Page
VELKE		
3999	45-019	LG 239
VPIVOTBUSH	45-127	LG 244
VENTZKI		
754-0145	75-145	LG 300
754-0151	75-004	LG 301
754-0935	75-092	LG 304
954-0145	75-145	LG 300
954-0145A	75-145	LG 300
954-0151	75-004	LG 301
954-015A	75-145	LG 300
954-0935	75-092	LG 304
VERI		
V804	55-804-1	LG 994
V807	55-807	LG 994
VICTA		
754-0151	75-004	LG 301
954-0151	75-004	LG 301
VIKING		
6120-430-0500	33-331	LG 730
6120-430-0500	33-337	LG 730
VILLAGE BLACKSMITH		
1609	75-120	LG 300
VORNADO		
754-0935	75-092	LG 304
954-0935	75-092	LG 304
WALBRO		
010-HD	49-847	LG 610
010-HDA	49-852	LG 611
010-WY	49-839	LG 613
125-527	07-214	LG 779
125-527-1	07-214	LG 779
125528	07-219	LG 779
125-528	07-219	LG 779
125-528-1	07-219	LG 779
125528D	07-219	LG 779
125-552	07-137	LG 779
125-552-1	07-137	LG 779
140-69	55-343	LG 627
140-69-08	55-343	LG 627
140-69-8	55-343	LG 627
140-70	55-342	LG 627
140-70-08	55-342	LG 627
140-70-8	55-342	LG 627
188-11	49-026	LG 769
188-11-1	49-026	LG 769
188-12	49-020	LG 631
188-12	49-088-0	LG 631
188-12-1	49-020	LG 631
188-12-8	49-020	LG 631
188-13	49-027	LG 769
188-13-1	49-027	LG 769
188-15	49-020	LG 631
188-15-1	49-020	LG 631
188-506	55-187	LG 631
188-506-1	55-187	LG 631
188-508	55-187	LG 631
188-508	55-188	LG 631
188-508-1	55-188	LG 631
188-509	55-188	LG 631
188-509	55-189	LG 631
188-509-1	55-189	LG 631
188-512	49-020	LG 631
188-512	49-088-0	LG 631
188-512-1	49-088-0	LG 631
34-219	49-023	LG 629
350-501	49-810	LG 612
350-502	49-812	LG 612

OEM No.	OREGON	Page
350-503	49-807	LG 611
350-504	49-809	LG 613
350-511	49-814	LG 614
350-518	49-806	LG 611
350-534	49-812	LG 612
615-047	50-607	LG 595
615-058	49-833	LG 611
615-211	49-021	LG 629
615-229	49-023	LG 629
615-237	49-810	LG 612
615-237	49-834	LG 611
615-245	49-816	LG 612
615-405	49-807	LG 611
615-435	49-809	LG 613
615-443	49-812	LG 612
615-463	49-831	LG 612
615-500	55-342	LG 627
615-530	49-833	LG 611
615-534	49-810	LG 612
615-534	49-834	LG 611
615-538	49-816	LG 612
615-546	49-873	LG 612
615-554	49-877	LG 613
615-570	49-832	LG 611
615-582	49-853	LG 611
615-598	49-807	LG 611
615-610	49-882-0	LG 613
615-686	49-020	LG 631
615-712	49-020	LG 631
615-720	49-281	LG 613
615-736	49-026	LG 769
615-740	49-020	LG 631
615-744	49-027	LG 769
615-748	55-187	LG 631
615-752	55-188	LG 631
615-756	55-189	LG 631
615-772	49-020	LG 631
615-784	49-027	LG 769
615-811	49-020	LG 631
615-852	49-847	LG 610
615-853	49-843	LG 612
615-854	49-839	LG 613
615-856	49-852	LG 611
615-857	49-806	LG 611
615-860	49-844	LG 612
615-864	49-849	LG 610
615-870	49-882-0	LG 613
615-873	49-316	LG 613
615-961	49-847	LG 610
630746	55-333	LG 633
82-26	49-021	LG 629
82-75	49-021	LG 629
82-75-7	49-021	LG 629
82-76	49-021	LG 629
82-76-7	49-021	LG 629
82-82	49-023	LG 629
82-82-7	49-023	LG 629
82-87	49-023	LG 629
88-171	49-847	LG 610
88-171-8	49-847	LG 610
88-181	55-333	LG 633
88-28	49-847	LG 610
88-28	55-333	LG 633
88-54	55-333	LG 633
88-54-8	55-333	LG 633
88-55	53-006	LG 632
88-55-8	53-006	LG 632
88-89	55-334	LG 633
92-351	49-315	LG 627
D10HD	49-847	LG 610
D10-HD	49-847	LG 610
D10-HDA	49-835	LG 611
D10HDB	49-806	LG 611
D10-HDB	49-806	LG 611
D10HDC	49-807	LG 611

OEM No.	OREGON	Page
D10-HDC	49-807	LG 611
D10-SDC	49-810	LG 612
D10-WAT	49-812	LG 612
D10-WJ	49-843	LG 612
D10WS	49-814	LG 614
D10-WS	49-814	LG 614
D10WY	49-839	LG 613
D10-WY	49-839	LG 613
D10WZ	49-848	LG 613
D10-WZ	49-848	LG 613
D11-WJ	49-839	LG 613
D11-WYL	49-317	LG 613
D12-WJ	49-839	LG 613
D1HDB	49-806	LG 611
D1-HDB	49-806	LG 611
D1HDC	49-807	LG 611
D1-HDC	49-807	LG 611
D1-MDC	49-809	LG 613
D1-SDC	49-810	LG 612
D1-WA	49-812	LG 612
D1-WAT	49-812	LG 612
D1-WJ	49-843	LG 612
D1WS	49-814	LG 614
D1-WS	49-814	LG 614
D20-HDA	49-835	LG 611
D20-WAT	49-844	LG 612
D20-WYJ	49-281	LG 613
D22HDA	49-852	LG 611
D22-HDA	49-852	LG 611
K10HD	49-849	LG 610
K10-HD	49-849	LG 610
K10HDB	49-832	LG 611
K10-HDB	49-832	LG 611
K10HDC	49-833	LG 611
K10-HDC	49-833	LG 611
K10-SDC	49-834	LG 611
K10-WAT	49-816	LG 612
K10-WB	49-872	LG 612
K10-WJ	49-873	LG 612
K10-WY	49-875	LG 612
K10-WZ	49-877	LG 613
K1-LMB	49-201	LG 608
K1-SDC	49-834	LG 611
K20-HDA	49-845	LG 611
K20WAT	49-831	LG 612
K20-WAT	49-831	LG 612
K20-WYJ	49-882-0	LG 613
K20-WYL	49-316	LG 613
K22HDA	49-853	LG 611
K22-HDA	49-853	LG 611
K3-LMB	49-201	LG 608
K6WA	49-816	LG 612
K6-WA	49-816	LG 612
WAL-140-69-8	55-343	LG 627
WAL-140-70-8	55-342	LG 627
WAL-188-11-1	49-026	LG 769
WAL-188-13-1	49-027	LG 769
WAL-188-15-1	49-020	LG 631
WAL-188-506	55-187	LG 631
WAL-188-508	55-188	LG 631
WAL-188-509	55-189	LG 631
WAL-82-75-7	49-021	LG 629
WAL-82-82-7	49-023	LG 629
WAL-D10-HDB	49-806	LG 611
WAL-D10-HDC	49-807	LG 611
WAL-D10-WJ	49-843	LG 612
WAL-D10-WY	49-839	LG 613
WAL-D10-WZ	49-848	LG 613
WAL-D11-WYL	49-317	LG 613
WAL-D20-HDA	49-835	LG 611
WAL-D20-WAT	49-844	LG 612
WAL-D22-HDA	49-852	LG 611
WAL-K10-HDB	49-832	LG 611
WAL-K10-HDC	49-833	LG 611
WAL-K10-SDC	49-810	LG 612

X

* OREGON® Gator™ replacement blade

OEM No.	OREGON	Page
WALBRO		
WAL-K10-SDC	49-834	LG 611
WAL-K10-WAT	49-816	LG 612
WAL-K10-WB	49-872	LG 612
WAL-K10-WJ	49-873	LG 612
WAL-K10-WYB	49-875	LG 612
WAL-K10-WYC	49-875	LG 612
WAL-K10-WZ	49-877	LG 613
WAL-K1-MDC	49-809	LG 613
WAL-K20-HDA	49-845	LG 611
WAL-K20-WAT	49-831	LG 612
WAL-K20-WYJ	49-882-0	LG 613
WAL-K20-WYL	49-316	LG 613
WAL-K22-HDA	49-853	LG 611
WYJ-192	50-603	LG 595
WYJ-192-1	50-603	LG 595
WYL-19	50-607	LG 595
WYL-19-1	50-607	LG 595
WALKER		
355-040	91-911	LG 576
4218	72-756	LG 1046
5037	45-047	LG 241
5265	45-295	LG 232
5705-0	91-911	LG 576
5705-1	91-911	LG 576
5705-3	91-912	LG 576
5705-3	91-913	LG 576
5705-4	91-912	LG 576
5705-4	91-913	LG 576
5706	65-230	LG 342
5715-4	72-756	LG 1046
6231	15-842	LG 325
6942	33-317-0	LG 729
6950	33-384	LG 947
7230	15-843	LG 325
7234	15-844	LG 325
7235	15-845	LG 325
7705-1	91-917	LG 576
7705-1	91-920	LG 576
7705-2	91-919	LG 576
7705-2	91-920	LG 576
7705-6	92-177	LG 576
7705-7	92-176	LG 576
8230	115-212	LG 325
B1SB3423	91-911	LG 576
WARDS		
90266209	46-319	LG 712
WARNER		
5215-129	33-125-1	LG 736
5215-130	33-126-1	LG 736
5215-134	33-122-1	LG 734
5215-14	33-114	LG 734
5215-142	33-139	LG 736
5215-18	33-183	LG 735
5215-51	33-110	LG 735
5215-53	33-116	LG 735
5215-59	33-128-1	LG 741
5215-62	33-113	LG 740
5215-69	33-185	LG 737
5215-88	33-118-1	LG 733
5217-18	33-112	LG 735
5217-2	33-111	LG 735
5217-32	33-133	LG 736
5217-43	33-133	LG 736
5217-9	33-112	LG 735
5218-10	33-119-1	LG 734
5218-110	33-188	LG 738
5218-14	33-184	LG 737
5218-17	33-127	LG 737
5218-201	33-187	LG 738
5218-213	33-136	LG 737
5218-215	33-137	LG 737
5218-219	33-188	LG 738
5218-223	33-119-1	LG 734
5218-26	33-121	LG 734
5218-27	33-117	LG 733
5218-29	33-124	LG 736
5218-30	33-120	LG 734
5218-31	33-120	LG 734
5218-31	33-138	LG 738
5218-33	33-189	LG 740
5218-44	33-187	LG 738
5218-5	33-115	LG 738
5218-58	33-121	LG 734
5218-65	33-136	LG 737
5218-76	33-135	LG 737
5218-80	33-137	LG 737
5218-94	33-138	LG 738
5219-14	33-132	LG 735
5219-19	33-190	LG 741
5219-25	33-104	LG 735
5219-45	33-130	LG 733
5219-51	33-134	LG 736
5219-64	33-134	LG 736
5219-79	33-134	LG 736
5219-99	33-255	LG 736
I-5218-251-008	33-159	LG 733
WEED EATER		
19157	49-331	LG 604
23364	07-201	LG 779
23369	55-612	LG 211
23791	55-613	LG 211
24548	55-226	LG 212
24841	07-207	LG 779
26048	55-822	LG 1027
35008	49-021	LG 629
35027	55-343	LG 627
35032	49-816	LG 612
35049	49-816	LG 612
35092	49-816	LG 612
35093	49-812	LG 612
35106	49-021	LG 629
35112	49-806	LG 611
35127	49-832	LG 611
35128	49-806	LG 611
35144	49-816	LG 612
35145	49-812	LG 612
35146	49-812	LG 612
35161	49-816	LG 612
35163	49-021	LG 629
35173	49-812	LG 612
35185	49-816	LG 612
35186	49-812	LG 612
35189	55-342	LG 627
35199	49-816	LG 612
35213	49-835	LG 611
35260	49-816	LG 612
530024841	07-207	LG 779
530026048	55-822	LG 1027
530-026048	55-822	LG 1027
530-069195	55-255	LG 1019
530-086473	55-281	LG 1027
530091481	07-206	LG 776
530091878	07-207	LG 779
91481	07-206	LG 776
952-701663	55-285	LG 1027
952-701674	40-010	LG 588
952-711548	55-281	LG 1027
WESTERN AUTO		
37X12	75-112	LG 306
37X38	75-038	LG 307
37X57	75-057	LG 307
37X65	75-065	LG 307
754-0145	75-145	LG 300
754-0151	75-004	LG 301
754-0178	75-179	LG 310
7540182	75-208	LG 277
754-0230	75-008	LG 301
754-0293	75-018	LG 301
754-0349	75-021	LG 274
754-0350	75-035	LG 302
754-0935	75-092	LG 304
954-0145	75-145	LG 300
954-0145A	75-145	LG 300
954-0151	75-004	LG 301
954-015A	75-145	LG 300
954-0178	75-179	LG 310
954-0230	75-008	LG 301
954-0293	75-018	LG 301
954-0350	75-035	LG 302
954-0935	75-092	LG 304
GW-7540350	75-035	LG 302
WESTERN INDUSTRIES		
54765	35-021	LG 810
54766	35-021	LG 810
WESTWOOD		
1530	33-331	LG 730
1530	33-334	LG 730
1530	33-335	LG 730
1530	33-336	LG 730
1530	33-337	LG 730
2703	33-399	LG 944
WHEATBELT		
754-0145	75-145	LG 300
754-0201	75-441	LG 334
754-0230	75-008	LG 301
754-0234	75-441	LG 334
754-0240	75-009	LG 301
754-0241	75-012	LG 301
754-0266	75-016	LG 301
754-0293	75-018	LG 301
754-0935	75-092	LG 304
954-0145	75-145	LG 300
954-0145A	75-145	LG 300
954-015A	75-145	LG 300
954-0201	75-441	LG 334
954-0230	75-008	LG 301
954-0234	75-441	LG 334
954-0240	75-009	LG 301
954-0241	75-012	LG 301
954-0241A	75-012	LG 301
954-0266	75-016	LG 301
954-0266A	75-016	LG 301
954-0293	75-018	LG 301
954-0935	75-092	LG 304
WHITE		
754-0197	75-079	LG 301
754-0266	75-016	LG 301
754-0293	75-018	LG 301
754-0349	75-021	LG 274
754-0350	75-035	LG 302
954-0197	75-079	LG 301
954-0266	75-016	LG 301
954-0266A	75-016	LG 301
954-0293	75-018	LG 301
954-0350	75-035	LG 302
GW-7540350	75-035	LG 302
WHITE OUTDOOR PRODUCTS		
754-0145	75-145	LG 300
754-0151	75-004	LG 301
754-0178	75-179	LG 310
754-0194	75-090	LG 301
754-0201	75-441	LG 334
754-0230	75-008	LG 301
754-0234	75-441	LG 334
754-0240	75-009	LG 301
754-0241	75-012	LG 301
754-0935	75-092	LG 304
954-0145	75-145	LG 300
954-0145A	75-145	LG 300
954-0151	75-004	LG 301
954-015A	75-145	LG 300
954-0178	75-179	LG 310
954-0194	75-090	LG 301
954-0201	75-441	LG 334
954-0230	75-008	LG 301
954-0234	75-441	LG 334
954-0240	75-009	LG 301
954-0241	75-012	LG 301
954-0241A	75-012	LG 301
954-0935	75-092	LG 304
WHITE STORES		
754-0145	75-145	LG 300
754-0151	75-004	LG 301
754-0178	75-179	LG 310
754-0201	75-441	LG 334
754-0234	75-441	LG 334
754-0240	75-009	LG 301
754-0241	75-012	LG 301
754-0266	75-016	LG 301
754-0935	75-092	LG 304
954-0145	75-145	LG 300
954-0145A	75-145	LG 300
954-0151	75-004	LG 301
954-015A	75-145	LG 300
954-0178	75-179	LG 310
954-0201	75-441	LG 334
954-0234	75-441	LG 334
954-0240	75-009	LG 301
954-0241	75-012	LG 301
954-0241A	75-012	LG 301
954-0266	75-016	LG 301
954-0266A	75-016	LG 301
954-0935	75-092	LG 304
WICKES LUMBER		
754-0145	75-145	LG 300
754-0151	75-004	LG 301
954-0145	75-145	LG 300
954-0145A	75-145	LG 300
954-0151	75-004	LG 301
954-015A	75-145	LG 300
WISCONSIN		
L0194	30-080	LG 205
L0194A	30-819	LG 205
LO188	30-102	LG 220
LP43	07-001	LG 765
VE527W	60-687	LG 720
WD66AS2	35-006	LG 808
WISCONSIN ROBIN		
EY1573620101	30-412	LG 220
EY1573620101	30-612	LG 195
EY2063260107	30-414	LG 221
EY2073260008	30-415	
EY2073260618	30-419	LG 221
EY2263261007	30-418	LG 221
EY2273261007	30-413	LG 221
EY2273280307	30-410	LG 220
EY2273280317	30-410	LG 220
EY2343260407	30-423	LG 221
WOOD MIZER		
P604	33-120	LG 734
P604	33-138	LG 738

X

* OREGON® Gator™ replacement blade

2019 OEM X-Reference

WOODS

OEM No.	OREGON	Page
03643100	33-112	LG 735
08899100CKT	396-807*	LG 454
08899100CKT	596-815*	LG 578
08899100CKT	92-159	LG 578
09246600CKT	396-807*	LG 454
09246600CKT	596-815*	LG 578
1001513	91-584	LG 578
1001513BLK	91-584	LG 578
1001513KT	91-584	LG 578
10081899KT2	591-585*	LG 493
10081899KT2	91-585	LG 493
1008199	591-585*	LG 493
1008199	91-585	LG 493
1008199KT	591-585*	LG 493
1008199KT	91-585	LG 493
1008199KT2	91-585	LG 493
10676	15-847	LG 325
10859	15-848	LG 325
10864	15-849	LG 325
11466	15-850	LG 325
13404	91-764	LG 579
13404KT	91-764	LG 579
13425	115-217	LG 325
13453	15-851	LG 325
1469	15-852	LG 325
15127	91-766	LG 579
15127CKT	91-766	LG 579
15127KT	91-766	LG 579
15184	15-853	LG 325
15415A	15-854	LG 325
15624	15-855	LG 258
16099	15-945	LG 325
16106	45-295	LG 232
18186	15-856	LG 325
18440	15-858	LG 325
18879	115-214	LG 325
18990	15-860	LG 325
20644	15-861	LG 325
21510W	15-863	LG 326
23033	15-864	LG 326
23560	15-865	LG 326
23825	91-761	LG 578
23825KT	91-761	LG 578
23933	15-867	LG 326
23943	15-868	LG 326
23990	15-869	LG 326
24102	15-870	LG 326
24590	91-767	LG 577
24590KT	91-767	LG 577
2474A	15-871	LG 326
255 319	33-138	LG 738
255 335	33-121	LG 734
255 511	33-112	LG 735
26354	15-872	LG 326
26840W	15-873	LG 326
27652	15-874	LG 326
27875	15-875	LG 326
27920	15-938	LG 326
28167	15-876	LG 326
28975	15-877	LG 326
29010	15-878	LG 327
29229	15-879	LG 327
29519	15-881	LG 327
29523	15-882	LG 327
30435	15-883	LG 327
31306	91-764	LG 579
31306KT	91-764	LG 579
31359	91-761	LG 578
31359KT	91-761	LG 578
31615	15-884	LG 327
31666	15-885	LG 327
31700	115-216	LG 327
31720	15-886	LG 327
31748	15-887	LG 327
320242	91-547	LG 449
320243	91-547	LG 449
320244	91-547	LG 449
320245	91-547	LG 449
320245B	91-547	LG 449
320246	91-547	LG 449
320247	91-547	LG 449
32650	15-888	LG 327
32855	15-889	LG 327
32906	15-890	LG 327
32970	15-891	LG 327
33050	15-892	LG 327
33056	15-893	LG 328
33105	15-894	LG 328
33652	115-213	LG 328
33710	15-895	LG 328
34517	15-896	LG 328
3492	15-897	LG 328
35162	15-898	LG 328
35252	15-899	LG 328
35433	15-900	LG 328
3546	15-901	LG 328
3551000	33-334	LG 730
3551000	33-335	LG 730
3551000	33-336	LG 730
35543	15-902	LG 328
35583	15-947	LG 328
36365	15-903	LG 328
36371	15-904	LG 328
3643100	33-112	LG 735
36496	15-905	LG 328
3652	15-906	LG 328
37051	15-907	LG 329
4152	115-215	LG 329
430508	33-410	LG 947
4927	15-943	LG 329
5082	15-908	LG 329
51344	15-911	LG 329
53418	15-913	LG 329
5711	15-914	LG 329
6234	91-762	LG 578
65172	91-766	LG 579
66503	15-916	LG 329
6814	15-918	LG 329
6950	91-762	LG 578
6950KT	91-762	LG 578
70003	15-920	LG 329
70014	396-713*	LG 577
70014	91-557	LG 545
70014	96-343*	LG 395
70018	78-021	LG 832
70062KT	396-713*	LG 577
70062KT	96-343*	LG 395
70102	15-921	LG 329
70104KT	396-729*	LG 449
70104KT	596-329*	LG 578
70104KT	91-558	LG 448
70104KT	96-329*	LG 449
70117KT	396-729*	LG 449
70117KT	596-329*	LG 578
70117KT	91-535	LG 448
70117KT	96-329*	LG 449
70132	15-922	LG 329
70132	75-208	LG 277
70134	396-712*	LG 449
70134	596-346*	LG 393
70134	91-547	LG 449
70134	96-346*	LG 449
70134KT	396-712*	LG 449
70134KT	596-346*	LG 393
70134KT	91-547	LG 449
70134KT	96-346*	LG 449
70142	91-547	LG 449
70142KT	396-712*	LG 449
70142KT	596-346*	LG 393
70142KT	91-534	LG 578
70142KT	96-346*	LG 449
7014KT	396-713*	LG 577
7014KT	91-557	LG 545
7014KT	96-343*	LG 395
70197	15-939	LG 329
70341	15-940	LG 329
70422	33-410	LG 947
70580	15-923	LG 330
70581	15-924	LG 330
70820	83-284	LG 818
70903	33-117	LG 733
70939	83-283	LG 818
70939	83-403	LG 818
70983	15-926	LG 330
71429	15-928	LG 330
71506	15-929	LG 330
71526	15-930	LG 330
71579	15-931	LG 330
71616	15-932	LG 330
71803	30-095	LG 206
71803	30-818	LG 206
71803	69-395	LG 206
71838	15-933	LG 330
71879	15-934	LG 330
72372	33-410	LG 947
72505KT	396-729*	LG 449
72505KT	596-329*	LG 578
72505KT	91-538	LG 577
72505KT	96-329*	LG 449
72517KT	396-712*	LG 449
72517KT	596-346*	LG 393
72517KT	91-539	LG 393
72517KT	96-346*	LG 449
72818	15-935	LG 330
72859	83-282	LG 817
72859	83-402	LG 817
72896KT	396-713*	LG 577
72896KT	396-729*	LG 449
72896KT	596-329*	LG 578
72896KT	91-535	LG 448
72896KT	96-329*	LG 449
72896KT	96-343*	LG 395
72897KT	396-729*	LG 449
72897KT	596-329*	LG 578
72897KT	91-558	LG 448
72897KT	96-329*	LG 449
72904KT	396-729*	LG 449
72904KT	596-329*	LG 578
72904KT	91-538	LG 577
72904KT	96-329*	LG 449
73113	33-117	LG 733
73263	15-936	LG 330
73558	33-121	LG 734
73559	33-138	LG 738
74075	33-121	LG 734
DOP33-117WO	33-117	LG 733

WRIGHT STANDER

OEM No.	OREGON	Page
11990007	04-125	LG 694
13990008	09-804	LG 233
524-10001	33-019	LG 948
71410001	33-154	LG 741
71410006	33-190	LG 741
71440001	396-726*	LG 391
71440001	596-344*	LG 495
71440001	91-622	LG 536
71440001	96-344*	LG 536
71440002	396-735*	LG 452
71440002	596-308*	LG 548
71440002	91-620	LG 470
71440002	96-308*	LG 456
71440003	396-727*	LG 467
71440003	596-347*	LG 448
71440003	91-626	LG 552
71440003	96-347*	LG 387
71440004	392-165*	LG 580
71440004	92-165	LG 580
71440005	393-601*	LG 582
71440005	593-601*	LG 386
71440005	91-039	LG 487
71440005	93-601*	LG 432
71440007	396-702*	LG 480
71440007	596-702*	LG 388
71440007	91-135	LG 387
71440007	96-702*	LG 491
71440008	392-165*	LG 580
71440008	92-165	LG 580
71440009	393-601*	LG 582
71440009	593-601*	LG 386
71440009	91-039	LG 487
71440009	93-601*	LG 432
71440010	396-702*	LG 480
71440010	596-702*	LG 388
71440010	91-135	LG 387
71440010	96-702*	LG 491
71460002	75-952	LG 330
71460003	75-949	LG 330
71460006	78-044-1	LG 834
71460007	82-053	LG 905
71460010	75-951	LG 331
71460011	75-948	LG 331
71460012	15-948	LG 253
71460013	15-949	LG 255
71460017	45-220	LG 232
71460022	82-057	LG 905
71460033	115-218	LG 331
71460064	15-056	LG 331
71460071	15-057	LG 331
71460123	15-055	LG 331
71490001	396-735*	LG 452
71490001	596-308*	LG 548
71490001	92-743	LG 418
71490001	96-308*	LG 456
72460004	72-735	LG 1045
93460001	48-202	LG 694
93460008	48-237	LG 695

WW GRAINGER (DAYTON)

754-0145	75-145	LG 300
754-0151	75-004	LG 301
754-0178	75-179	LG 310
754-0194	75-090	LG 301
754-0201	75-441	LG 334
754-0230	75-008	LG 301
754-0234	75-441	LG 334
754-0240	75-009	LG 301
754-0241	75-012	LG 301
754-0266	75-016	LG 301
754-0935	75-092	LG 304
954-0145	75-145	LG 300
954-0145A	75-145	LG 300
954-0151	75-004	LG 301
954-015A	75-145	LG 300
954-0178	75-179	LG 310
954-0194	75-090	LG 301
954-0201	75-441	LG 334
954-0230	75-008	LG 301
954-0234	75-441	LG 334
954-0240	75-009	LG 301
954-0241	75-012	LG 301
954-0241A	75-012	LG 301
954-0266	75-016	LG 301
954-0266A	75-016	LG 301
954-0935	75-092	LG 304

YAMAKOYO

49-68	50-674	LG 597

X

* OREGON® Gator™ replacement blade

OEM No.	OREGON	Page
YANMAR		
129150-35150	83-301	LG 816
YARDMAN		
1626-69	34-005	LG 821
2120-84	34-030	LG 821
754-0145	75-145	LG 300
754-0178	75-179	LG 310
754-0194	75-090	LG 301
754-0201	75-441	LG 334
754-0230	75-008	LG 301
754-0234	75-441	LG 334
754-0240	75-009	LG 301
754-0241	75-012	LG 301
754-0266	75-016	LG 301
754-0293	75-018	LG 301
754-0350	75-035	LG 302
754-0364	75-025	LG 253
754-0371A	75-028	LG 302
754-0935	75-092	LG 304
954-0145	75-145	LG 300
954-0145A	75-145	LG 300
954-015A	75-145	LG 300
954-0178	75-179	LG 310
954-0194	75-090	LG 301
954-0201	75-441	LG 334
954-0230	75-008	LG 301
954-0234	75-441	LG 334
954-0240	75-009	LG 301
954-0241	75-012	LG 301
954-0241A	75-012	LG 301
954-0266	75-016	LG 301
954-0266A	75-016	LG 301
954-0293	75-018	LG 301
954-0350	75-035	LG 302
954-0364	75-025	LG 253
954-0371A	75-028	LG 302
954-0935	75-092	LG 304
GW-7540350	75-035	LG 302
O652-74	45-091	LG 249
YARDVARK		
91483	55-807	LG 994
91489	55-804-1	LG 994
YAZOO-KEES		
100023	15-951	LG 297
100024	15-952	LG 297
100026	75-269	LG 252
101080	33-028	LG 947
101141	15-954	LG 297
101164	83-010	LG 819
101164	83-400	LG 819
101228	15-955	LG 297
101736	15-956	LG 297
101996	15-957	LG 297
102424	33-002	LG 946
102549	15-958	LG 297
103030	60-408	LG 700
104335	75-687	LG 297
104336	75-688	LG 297
106339	15-959	LG 297
200-013	86-008	LG 782
204-019	45-243	LG 243
204-020	45-242	LG 243
204-060	45-295	LG 232
205-505	15-961	LG 297
205-513	15-962	LG 297
205-514	15-963	LG 297
362024	82-306	LG 874
362095	78-640	LG 835
362096	78-641	LG 835
362101	48-205	LG 694
363033	09-802	LG 233
363039	43-075	
363143	75-036	LG 297
363144	75-221	LG 280
363145	75-240	LG 297
363150	34-024	LG 822
363161	48-211	LG 233
363173	45-220	LG 232
363194	45-127	LG 244
363199	45-078	LG 230
363214	78-031	LG 826
363312	83-282	LG 817
363312	83-402	LG 817
363333	07-100	LG 774
393194	45-030	LG 245
482005	82-307-0	LG 874
483013	75-058	LG 255
483036	34-007	LG 826
483036	34-024	LG 822
923408	33-027	LG 947
ZAMA		
0018002	49-021	LG 629
0018004	49-023	LG 629
0057003	49-028	LG 769
11081200608	49-879	LG 618
18002	49-021	LG 629
18004	49-023	LG 629
49-897	49-897	LG 617
57003	49-028	LG 769
57004	49-028	LG 769
615-078	49-898	LG 618
615-082	49-285	LG 617
615-082	49-891-0	LG 617
615-086	49-440	LG 618
615-090	49-857	LG 619
615-094	49-894	LG 619
615-098	49-884	LG 619
615-102	49-859	LG 616
615-108	49-883	LG 618
615-128	50-619	LG 595
615-128	50-620	LG 595
615-132	50-619	LG 595
615-132	50-620	LG 595
615-207	49-270	LG 619
615-211	49-021	LG 629
615-217	49-908	LG 614
615-227	49-904	LG 614
615-233	49-439	LG 614
615-241	49-880	LG 617
615-253	49-903	LG 615
615-269	49-881	LG 618
615-277	49-855	LG 617
615-290	49-908	LG 614
615-294	49-274	LG 614
615-356	49-897	LG 617
615-360	49-822-0	LG 616
615-360	49-865	LG 616
615-362	49-819-0	LG 615
615-362	49-861	LG 615
615-364	49-866	LG 617
615-366	49-818-0	LG 615
615-368	49-856	LG 619
615-370	49-817-0	LG 616
615-370	49-864	LG 616
615-374	49-437	LG 614
615-378	49-901	LG 615
615-390	49-287	LG 620
615-394	49-904	LG 614
615-423	49-906	LG 615
615-439	49-287	LG 620
615-441	49-441	LG 618
615-455	49-854	LG 615
615-467	49-288	LG 619
615-488	49-442	LG 619
615-504	49-286	LG 615
615-504	49-438	LG 615
615-526	49-903	LG 615
615-566	49-274	LG 614
615-614	49-285	LG 617
615-614	49-891-0	LG 617
615-621	49-273	LG 620
615-706	49-288	LG 619
615-776	49-283	LG 616
615-776	49-887-0	LG 616
615-780	49-284	LG 617
615-780	49-888-0	LG 617
615-792	49-028	LG 769
615-804	49-028	LG 769
615-827	49-836-0	LG 616
615-843	49-863	LG 616
82-75-7	49-021	LG 629
C1U-K47	50-619	LG 595
C1U-K51	50-619	LG 595
C1U-K52	50-619	LG 595
C1U-K52	50-620	LG 595
C1U-K54	50-619	LG 595
C1U-K54	50-620	LG 595
C1U-K54A	50-619	LG 595
C1U-K54A	50-620	LG 595
GND04	49-885-0	LG 619
GND07	49-859	LG 616
GND08	49-860	LG 616
GND1	49-854	LG 615
GND-1	49-854	LG 615
GND12	49-855	LG 617
GND-12	49-855	LG 617
GND13	49-856	LG 619
GND-13	49-856	LG 619
GND14	49-880	LG 617
GND-14	49-880	LG 617
GND-15	49-855	LG 617
GND17	49-880	LG 617
GND-17	49-880	LG 617
GND-18	49-270	LG 619
GND2	49-881	LG 618
GND-2	49-881	LG 618
GND-21	49-893	LG 617
GND25	49-857	LG 619
GND-25	49-857	LG 619
GND-28	49-883	LG 618
GND-29	49-894	LG 619
GND-33	49-884	LG 619
GND-35	49-894	LG 619
GND-39	49-884	LG 619
GND4	49-282	LG 619
GND4	49-885-0	LG 619
GND-4	49-282	LG 619
GND-53	49-322	LG 620
GND-56	49-442	LG 619
GND7	49-859	LG 616
GND-7	49-859	LG 616
GND8	49-860	LG 616
GND-8	49-860	LG 616
GND-84	49-313	LG 620
GND-88	49-323	LG 621
GND-89	49-320	LG 621
K500018	49-837-0	LG 615
K500024	49-818-0	LG 615
K500028	49-818-0	LG 615
K500033	49-818-0	LG 615
K500036	49-818-0	LG 615
K500038	49-818-0	LG 615
KR3	49-836-0	LG 616
R8-36	49-823-0	LG 618
RB 28	49-866	LG 617
RB01	49-819-0	LG 615
RB01	49-861	LG 615
RB-01	49-819-0	LG 615
RB-01	49-861	LG 615
RB06	49-837-0	LG 615
RB-06	49-837-0	LG 615
RB1	49-861	LG 615
RB-1	49-819-0	LG 615
RB-1	49-861	LG 615
RB-10	49-818-0	LG 615
RB-100	49-441	LG 618
RB105	49-273	LG 620
RB-105	49-273	LG 620
RB11	49-863	LG 616
RB-11	49-863	LG 616
RB-114	49-287	LG 620
RB129	49-277	LG 620
RB-129	49-277	LG 620
RB142	49-275	LG 620
RB-142	49-275	LG 620
RB15	49-836-0	LG 616
RB-15	49-836-0	LG 616
RB-151	49-319	LG 620
RB-155	49-318	LG 621
RB-164	49-318	LG 621
RB-180	49-318	LG 621
RB20	49-817-0	LG 616
RB20	49-864	LG 616
RB-20	49-817-0	LG 616
RB-20	49-864	LG 616
RB21	49-822-0	LG 616
RB21	49-865	LG 616
RB-21	49-822-0	LG 616
RB-21	49-865	LG 616
RB22	49-865	LG 616
RB-22	49-897	LG 617
RB-23	49-283	LG 616
RB-23	49-887-0	LG 616
RB-26	49-284	LG 617
RB-26	49-888-0	LG 617
RB-27	49-897	LG 617
RB-271	49-271	LG 614
RB28	49-866	LG 617
RB-28	49-866	LG 617
RB-29	49-285	LG 617
RB-29	49-891-0	LG 617
RB31	49-899	LG 617
RB-31	49-899	LG 617
RB36	49-823-0	LG 618
RB36	49-867	LG 618
RB-36	49-823-0	LG 618
RB-36	49-867	LG 618
RB-39	49-274	LG 614
RB-39	49-902	LG 614
RB-40	49-437	LG 614
RB-41	49-898	LG 618
RB42	49-879	LG 618
RB-42	49-879	LG 618
RB-44	49-903	LG 615
RB-45	49-286	LG 615
RB-45	49-438	LG 615
RB47	49-272	LG 614
RB-47	49-272	LG 614
RB-59	49-286	LG 615
RB-59	49-901	LG 615
RB6	49-837-0	LG 615
RB-6	49-837-0	LG 615
RB-61	49-906	LG 615
RB-64	49-439	LG 614
RB-66	49-440	LG 618
RB-69	49-904	LG 614
RB71	49-271	LG 614
RB-73	49-908	LG 614
RB77	49-274	LG 614
RB-89	49-288	LG 619
RB99	49-276	LG 620
RB-99	49-276	LG 620
RB-K66A	50-621	LG 595
ZAM-C1U-K52	50-619	LG 595
ZAM-C1U-K52	50-620	LG 595
ZAM-C1U-K54A	50-619	LG 595

X

* OREGON® Gator™ replacement blade

2019 OEM X-Reference

OEM No.	OREGON	Page
ZAMA		
ZAM-C1U-K54A	50-620	LG 595
ZAM-GND-12	49-855	LG 617
ZAM-GND-17	49-880	LG 617
ZAM-GND-18	49-270	LG 619
ZAM-GND-2	49-881	LG 618
ZAM-GND-21	49-893	LG 617
ZAM-GND-25	49-857	LG 619
ZAM-GND-28	49-883	LG 618
ZAM-GND-33	49-884	LG 619
ZAM-GND-39	49-884	LG 619
ZAM-GND-4	49-282	LG 619
ZAM-GND-53	49-322	LG 620
ZAM-GND-56	49-442	LG 619
ZAM-GND-7	49-859	LG 616
ZAM-GND-8	49-860	LG 616
ZAM-GND-89	49-320	LG 621
ZAM-RB-1	49-819-0	LG 615
ZAM-RB-1	49-861	LG 615
ZAM-RB-10	49-818-0	LG 615
ZAM-RB-100	49-441	LG 618
ZAM-RB-105	49-273	LG 620
ZAM-RB-11	49-863	LG 616
ZAM-RB-114	49-287	LG 620
ZAM-RB-129	49-277	LG 620
ZAM-RB-142	49-275	LG 620
ZAM-RB-23	49-283	LG 616
ZAM-RB-23	49-887-0	LG 616
ZAM-RB-26	49-284	LG 617
ZAM-RB-26	49-888-0	LG 617
ZAM-RB-27	49-897	LG 617
ZAM-RB-29	49-285	LG 617
ZAM-RB-29	49-891-0	LG 617
ZAM-RB-31	49-899	LG 617
ZAM-RB-39	49-274	LG 614
ZAM-RB-40	49-437	LG 614
ZAM-RB-41	49-898	LG 618
ZAM-RB-42	49-879	LG 618
ZAM-RB-44	49-903	LG 615
ZAM-RB-45	49-286	LG 615
ZAM-RB-45	49-438	LG 615
ZAM-RB-47	49-272	LG 614
ZAM-RB-59	49-901	LG 615
ZAM-RB-6	49-837-0	LG 615
ZAM-RB-61	49-906	LG 615
ZAM-RB-64	49-439	LG 614
ZAM-RB-66	49-440	LG 618
ZAM-RB-69	49-904	LG 614
ZAM-RB-73	49-908	LG 614
ZAM-RB-89	49-288	LG 619
ZAM-RB-99	49-276	LG 620
ZF2	07-208	LG 779
ZF3	07-209	LG 779
ZF4	07-210	LG 779
ZF5	07-211	LG 779
ZAYERS		
754-0151	75-004	LG 301
754-0201	75-441	LG 334
754-0234	75-441	LG 334
754-0935	75-092	LG 304
954-0151	75-004	LG 301
954-0201	75-441	LG 334
954-0234	75-441	LG 334
954-0935	75-092	LG 304
ZENAOH		
1272-06020	49-812	LG 612
1272-06030	49-816	LG 612
2670-06020	49-812	LG 612
2670-06030	49-816	LG 612
3039-06030	49-816	LG 612
3306-81380	55-342	LG 627
3310-81310	49-021	LG 629
3310-81380	55-342	LG 627
3359-06010	49-835	LG 611
3496-06020	49-835	LG 611
ZIPPER		
100-1015	78-044-1	LG 834
10090295	391-598*	LG 583
10090295	91-598	LG 583
1009049-5	391-598*	LG 583
10090525	396-737*	LG 583
10090545	396-737*	LG 583
10090575	396-737*	LG 583
1009068-5	391-598*	LG 583

X

* OREGON® Gator™ replacement blade

ARNOLD

PART No.	OREGON	Page
490-100-0024	95-057	LG 380
490-100-0025	195-021	LG 468
490-100-0033	95-051	LG 465
490-100-0035	94-322	LG 520
490-100-0051	97-001	LG 527
490-100-0053	69-260-0	
490-100-0058	69-245-0	
490-100-0059	69-246-0	
490-100-0065	96-607	LG 571
490-100-0069	69-259-0	
490-100-0072	97-001	LG 527
490-100-0076	92-011	LG 490
490-100-0081	69-261-0	
490-100-0082	69-262-0	
490-100-0090	69-260-0	
490-100-0091	69-261-0	
490-100-0092	69-262-0	
490-100-0096	69-245-0	
490-100-0097	69-246-0	
490-100-0102	96-607	LG 571
490-100-0111	690-617-0	LG 368
490-100-0129	95-621	LG 402
490-100-0130	95-076	LG 404
490-100-0131	195-021	LG 468
490-100-C089	198-049	LG 518
490-100-H025	195-021	LG 468
490-100-M084	198-049	LG 518
490-100-M085	98-051	LG 521
490-100-M086	198-049	LG 518
490-100-M087	98-050	LG 521
490-100-M088	98-050	LG 521
490-105-0014	40-141	LG 585
490-105-0015	40-110	LG 584
490-105-0022	40-110	LG 584
490-105-0023	40-316	LG 586
490-105-0024	40-130	LG 586
490-105-0026	40-121	LG 584
490-110-0021	195-005	LG 373
490-110-0022	195-032	LG 425
490-110-0024	95-052	LG 398
490-110-0025	195-033	LG 400
490-110-0026	191-392	LG 488
490-110-0027	91-389	LG 538
490-110-0028	91-380	LG 538
490-110-0029	191-139	LG 491
490-110-0030	191-108	LG 484
490-110-0037	195-003	LG 400
490-110-0038	95-045	LG 374
490-110-0039	95-068	LG 376
490-110-0040	95-018	LG 399
490-110-0045	195-062	LG 376
490-110-0051	98-054	LG 574
490-110-0062	97-003	
490-110-0063	97-024	LG 525
490-110-0064	195-072	LG 530
490-110-0065	97-017	LG 537
490-110-0067	98-629	LG 412
490-110-0076	91-938	LG 514
490-110-0083	97-020	LG 526
490-110-0087	97-109	LG 525
490-110-0092	96-900	LG 526
490-110-0094	92-615	LG 491
490-110-0134	192-106	LG 491
490-110-0135	195-005	LG 373
490-110-0136	195-005	LG 373
490-110-0137	98-629	LG 412
490-110-0140	92-615	LG 491
490-110-0141	96-900	LG 526
490-110-0144	92-676	LG 491
490-110-0145	92-675	LG 484
490-110-0146	95-074	LG 533
490-110-0147	195-070	LG 469
490-110-0148	95-068	LG 376
490-110-0149	195-062	LG 376
490-110-0150	195-072	LG 530
490-110-0153	195-005	LG 373
490-110-C109	98-090	LG 519
490-110-C119	98-090	LG 519
490-110-C120	92-015	LG 407
490-110-C121	91-440	LG 408
490-110-C122	198-059	LG 403
490-110-C124	98-085	LG 561
490-110-C125	98-072	LG 408
490-110-C127	98-087	LG 407
490-110-C128	91-057	LG 409
490-110-C129	91-058	LG 411
490-110-C130	98-095	LG 521
490-110-C131	98-096	LG 404
490-110-M108	98-093	LG 411
490-110-M110	98-096	LG 404
490-110-M112	98-499	LG 519
490-110-M113	98-057	LG 513
490-110-M114	198-058	LG 517
490-110-M115	198-059	LG 403
490-110-M116	98-054	LG 574
490-110-M117	98-072	LG 408
490-110-M126	198-086	LG 565

BETTER OUTDOORS

PART No.	OREGON	Page
10480-S	596-327	LG 434
10480-S	91-369	LG 434
10480-S	91-373	LG 383
10480-S	96-327	LG 417
10661-S	396-716	LG 451
10661-S	596-310	LG 447
10661-S	91-180	LG 460
10661-S	91-183	LG 370
10661-S	91-313	LG 494
10661-S	91-368	LG 460
10661-S	96-310	LG 444
10661-S	99-127	LG 375
ACC-0022	396-716	LG 451
ACC-0022	596-310	LG 447
ACC-0022	91-180	LG 460
ACC-0022	91-183	LG 370
ACC-0022	91-313	LG 494
ACC-0022	91-368	LG 460
ACC-0022	96-310	LG 444
ACC-0022	99-127	LG 375

CRAFTSMAN

PART No.	OREGON	Page
24676	195-005	LG 373

J THOMAS

PART No.	OREGON	Page
AF-43	30-421	LG 220
AF-6029	83-010	LG 819
AF-9862	83-012	LG 819
BC-761	72-747	LG 1036
BL-007	97-024	LG 525
BL-010	98-050	LG 521
BL-011	198-058	LG 517
BL-012	98-054	LG 574
BL-013	98-061	LG 404
BL-014	198-059	LG 403
BL-016	98-001	LG 517
BL-019	98-096	LG 404
BL-020	97-022	LG 524
BL-021	97-001	LG 527
BL-022	98-072	LG 408
BL-023	98-097	LG 514
BL-025	93-025	LG 482
BL-028	92-028	LG 433
BL-038	91-181	LG 495
BL-039	91-170	LG 437
BL-071	98-071	LG 411
BL-073	91-073	LG 512
BL-085	91-369	LG 434
BL-091	98-094	LG 514
BL-120	91-507	LG 415
BL-122	92-607	LG 434
BL-124	592-608	LG 434
BL-179	92-015	LG 407
BL-192	91-380	LG 538
BL-194	91-381	LG 483
BL-278	98-081	LG 406
BL-279	392-204	LG 443
BL-294	98-080	LG 512
BL-300	96-300	LG 519
BL-303	96-344	LG 536
BL-351	96-351	LG 408
BL-369	91-369	LG 434
BL-373	596-373	LG 512
BL-379	596-373	LG 512
BL-381	90-697	LG 406
BL-391	91-394	LG 489
BL-406	492-726	LG 436
BL-507	492-731	LG 436
BL-697	90-697	LG 406
BL-699	96-699	LG 442
BL-709	96-309	LG 488
BL-716	96-310	LG 444
BL-717	96-308	LG 456
BL-718	96-344	LG 536
BL-721	96-702	LG 491
BL-724	96-319	LG 415
BL-732	96-332	LG 484
BL-734	396-734	LG 489
BL-741	94-621	LG 570
BL-744	96-724	LG 430
BL-745	94-615	LG 370
BL-748	94-618	LG 506
BL-750	96-321	LG 436
BL-751	96-322	LG 567
BL-752	396-752	LG 415
BL-753	392-204	LG 443
BL-754	96-749	LG 433
BL-764	392-204	LG 443
BL-905	96-705	LG 573
BL-912	91-539	LG 393
BL-915	94-615	LG 370
BL-916	593-600	LG 385
BL-917	96-310	LG 444
BL-918	96-344	LG 536
BL-920	96-620	LG 551
BL-921	96-347	LG 387
BL-921	96-702	LG 491
BL-923	96-323	LG 477
BL-924	96-319	LG 415
BL-929	91-538	LG 577
BO-009	93-005	LG 447
BO-0102	93-006	LG 444
BO-089	91-373	LG 383
BO-15A	93-009	LG 476
BO-16	93-005	LG 447
BO-175	91-368	LG 460
BO-178	91-335	LG 420
BO-17A	93-010	LG 432
BO-18	93-006	LG 444
BO-21A	93-008	LG 510
BO-269	91-311	LG 439
BO-3374	91-256	LG 437
BO-357	91-394	LG 489
BO-6122	91-443	LG 489
BO-6167	91-531	LG 393
BO-618	91-508	LG 419
BO-845	191-392	LG 488
BO-900	96-600	LG 569
BO-920	94-620	LG 414
BO-921	94-621	LG 570
BO-926	96-602	LG 572
BO-JD11	91-395	LG 493
BO-JD17	99-126	LG 501
BT-070	75-572	LG 335
BT-071	75-573	LG 335
BT-141	75-441	LG 334
BT-244	75-326	LG 334
BT-245	75-336	LG 334
BT-245GR	75-144	LG 284
BT-248GR	75-589	LG 335
BT-251	75-338	LG 334
BT-255	75-552	LG 334
BT-258	75-435	LG 334
BT-294	75-593	LG 335
BT-306	75-554	LG 334
BT-314	75-180	LG 254
BT-315	75-128	LG 253
BT-368	75-491	LG 335
BT-375	75-114	LG 281
BT-376	75-115	LG 260
BT-381	75-594	LG 335
BT-385	75-458	LG 334
BT-402	75-177	LG 281
BT-405	75-095	LG 268
BT-411	75-044	LG 313
BT-414	75-461	LG 334
BT-423	75-113	LG 281
BT-462	75-186	LG 281
BT-463	75-188	LG 256
BT-472	75-444	LG 334
BT-475	75-568	LG 334

2019 Aftermarket X-Reference

J THOMAS

PART No.	OREGON	Page
BT-476	75-503	LG 256
BT-499	75-181	LG 280
BT-587	75-052	LG 313
CH-226	60-410	LG 703
CU-21	492-730	LG 440
CU-22	492-732	LG 442
CU-317	392-206	LG 436
CU-322	392-203	LG 442
CU-324	392-204	LG 443
DE-1785	91-394	LG 489
DE-2215	192-106	LG 491
DE-881	91-078	LG 490
DE-882	91-395	LG 493
DE-939	91-079	LG 485
DE-940	91-138	LG 488
DE-941	91-078	LG 490
DE-942	91-395	LG 493
DX-010	91-505	LG 477
DX-011	91-502	LG 477
DX-167	91-506	LG 473
EB-1	40-141	LG 585
EB-1471	40-807	LG 585
EB-15	40-503	LG 589
EB-17	40-518	LG 589
EB-2	40-139	LG 584
EB-2110	40-402	LG 589
EB-2670	40-130	LG 586
EB-6276	40-840	LG 588
EB-731	40-514	LG 589
EB-9	40-316	LG 586
EB-STAR-10	40-845	LG 588
EB-STAR-9	40-843	LG 588
EV-25	91-482	LG 434
EV-27	92-054	LG 434
EX-16	92-029	LG 435
EX-18	92-030	LG 567
EX-21	92-031	LG 433
EX-24	92-057	LG 442
EX-3426	91-374	LG 442
EX-36	75-031	LG 278
GC-589	07-315	LG 772
GR-130	78-021	LG 832
GR-3377	91-557	LG 545
GR-3379	91-558	LG 448
GR-3380	91-532	LG 448
GR-3382	91-547	LG 449
GR-40-60	91-253	LG 415
GR-50	91-242	LG 371
GR-6171	91-254	LG 456
GR-6180	91-253	LG 415
GR-6323	91-535	LG 448
GR-6330	91-557	LG 545
GR-6402	91-533	LG 394
GR-6403	91-544	LG 397
HD-5009	91-516	LG 457
HD-5013	91-517	LG 457
HD-5100	92-101	LG 458
HD-5104	92-102	LG 458
HU-2160	92-044	LG 471
HU-2161	90-208	LG 502
HU-683	90-205	LG 501
HU-687	92-045	LG 474
HU-695	92-208	LG 472
JT-0321	75-582	LG 254
JT-05	75-221	LG 280
JT-0589	75-212	LG 268
JT-06	75-072	LG 268
JT-08	75-223	LG 269
JT-102	34-007	LG 826
JT-1027	34-028	LG 821
JT-102A	78-031	LG 826
JT-107	72-745	LG 1033
JT-109	48-200	LG 694
JT-109A	48-205	LG 694
JT-109BU	78-041	LG 823
JT-112B	78-649	LG 841
JT-112BU	78-644	LG 835
JT-112C	78-641	LG 835
JT-119BU	78-646	LG 841
JT120EX	78-640	LG 835
JT-126	43-075	
JT-130S	82-306	LG 874
JT-166	78-111	LG 826
JT-1701	48-320	LG 238
JT-17014	78-678	LG 835
JT-1703	09-808	LG 697
JT-1704	09-803	LG 697
JT-1952	09-802	LG 233
JT-2000	82-305	LG 908
JT-211GD	75-125	LG 269
JT-2502N	45-015	LG 233
JT-265	45-038	LG 224
JT-305A	09-801	LG 229
JT-3062	70-377	LG 960
JT-3143	48-148	LG 695
JT-3144	78-651	LG 835
JT-51160	75-165	LG 322
JT-5290	75-205	LG 322
JT-5750	75-570	LG 335
JT-61	75-546	LG 334
JT6101	75-222	LG 252
JT-6114	75-558	LG 253
JT-6115	75-443	LG 334
JT-7036	68-210	LG 962
JT-750	48-211	LG 233
JT-752	78-116	LG 826
JT-9801	78-673	LG 839
JT-9807	04-125	LG 694
JT-9808	09-804	LG 233
JT-9809	45-030	LG 245
JT-9811	45-188	LG 230
JT-9818	42-008	LG 945
JT-9820	75-580	LG 335
JT-9821	33-386	LG 942
JT-98265	75-047	LG 313
JT-9826A	78-003	LG 839
JT-9827	45-257	LG 245
JT-9842	46-416	LG 718
JT-9845	48-145	LG 698
JT-9851	48-141	LG 249
JT-9870	48-202	LG 694
JT-9871	48-006	LG 694
JT-9874	78-642	LG 841
JT-9879	75-260	LG 312
JT-9884	75-054	LG 312
JT-9885	75-154	LG 312
JT-9886	75-055	LG 255
JT-9887	75-043	LG 312
JT-9888	75-058	LG 255
JT-9891	75-578	LG 335
JT-98915	72-795	LG 1044
JT-9893	75-036	LG 297
JT-9896	75-048	LG 313
JT-9897	78-300	LG 833
JT-9898	78-121	LG 827
KU-540	91-433	LG 498
KU-541	92-048	LG 498
KU-551	92-116	LG 500
KU-552	92-130	LG 499
KU-571	91-493	LG 500
LB-849	92-011	LG 490
LE-337	98-091	LG 516
LE-388	98-071	LG 411
SG-3172	91-620	LG 470
SG-3180	91-181	LG 495
SG-3188	91-628	LG 387
SG-3403	91-620	LG 470
SG-3404	91-622	LG 536
SG-3409	91-621	LG 563
SG-3426	91-627	LG 482
SG-3434	91-209	LG 552
SG-3442	91-622	LG 536
SG-3445	91-628	LG 387
SG-608	91-638	LG 426
SN-2007	99-107	LG 551
SN-20NEW	99-103	LG 551
SR-001	31-230	LG 937
SR-003	31-240	LG 937
SR-029	31-250	LG 937
SR-306	31-180	LG 937
SR-896	31-260	LG 937
TCU15881	91-078	LG 490
TD-1541	70-366	LG 961
TD-1542	70-367	LG 961
TD-1543	70-368	LG 961
TD-1544	70-369	LG 961
TD-1545	70-370	LG 961
TD-1546	70-371	LG 961
TD-1547	70-372	LG 961
TD-1548	70-373	LG 961
TD-2804	70-364	LG 961
TD-484	78-680	LG 840
TO-08901	75-571	LG 335
TO-3570	07-312	LG 773
TO-71107	30-026	LG 208
TO-85309	45-002	LG 237
TOR-1006	94-017	LG 441
TOR-21	94-017	LG 441
TOR-336	94-018	LG 565
TOR-3393	94-039	LG 561
TOR-3394	91-181	LG 495
TOR-3405	94-022	LG 565
TOR-3502	94-069	LG 441
TOR-454	94-026	LG 369
TOR-5156	94-029	LG 414
TOR-5429	94-051	LG 570
TOR-6002	94-770	LG 569
TOR-6100	94-127	LG 569
TOR-62	94-019	LG 570
TOR-6271	96-705	LG 573
TOR-72	94-011	LG 572
TU-136	71-101	LG 956
TU-1361	71-096	LG 956
TU-1366	71-250	LG 956
TU-1566	71-102	LG 956
TU-1668	71-816	LG 956
TU-1888	71-104	LG 956
TU-1892	71-099	LG 956
TU-1893	71-406	LG 956
TU-1897	71-418	LG 957
TU-2300	71-100	LG 956
TU-2385	71-105	LG 957
TU2804	71-109	LG 956
TU-2804J	71-274	LG 956
TU-408	71-103	LG 956
TU-4104	71-400	LG 956
TU-4105	71-500	
TU-4106	71-600	LG 956
TU-4107	71-407	LG 956
TU4109	71-276	LG 956
TU-4110	71-278	
TU-480	71-800	LG 956
WA-344	91-912	LG 576
WA-3469	91-919	LG 576
WA-346RH	91-913	LG 576
WA-3470	91-920	LG 576
WA-34RH	91-911	LG 576
WB-170	45-014	LG 225
WB-698	45-010	LG 238
WK-862	02-535	

LANDSCAPE SUPPLY

PART No.	OREGON	Page
1205001	83-284	LG 818
150505	75-571	LG 335
150515	75-165	LG 322
156290	91-311	LG 439
156291	91-335	LG 420
211512	09-802	LG 233
212003	06-003	LG 805
212004	06-004	LG 805
212006N	82-306	LG 874
2120101A	34-023	LG 822
2120102AA	34-007	LG 826
212018N	78-641	LG 835
212019	78-649	LG 841
212022	78-643	LG 835
212104	45-104	LG 939
2121246	78-646	LG 841
212129	48-200	LG 694
21214B	45-078	LG 230
212166	78-111	LG 826
212184	78-020	LG 825
212214	78-651	LG 835
212622	78-644	LG 835
212786	78-041	LG 823
212806	82-308	LG 874
214095	78-640	LG 835
214194	45-030	LG 245
214798	43-075	
217001	71-400	LG 956
217006	71-109	LG 956
217019	71-500	
217027	71-511	LG 956

LANDSCAPE SUPPLY

PART No.	OREGON	Page
217035	71-600	LG 956
217043	71-101	LG 956
217047	71-250	LG 956
217050	71-102	LG 956
217068	71-800	LG 956
217076	71-816	LG 956
217084	71-104	LG 956
217092	71-098	LG 956
217100	71-100	LG 956
21711	71-105	LG 957
217126	71-408	LG 957
2205203	75-429	LG 334
220620	72-745	LG 1033
22113	93-025	LG 482
22118A	94-022	LG 565
2212	93-005	LG 447
2213	91-181	LG 495
2215	91-183	LG 370
2216	91-184	LG 421
2218	93-008	LG 510
2219	93-009	LG 476
22316	91-502	LG 477
2233	91-506	LG 473
2235	91-505	LG 477
224177	75-101	LG 269
2262	91-242	LG 371
2264	91-244	LG 450
2299	91-627	LG 482
231002	93-006	LG 444
231003	99-126	LG 501
231007	91-503	LG 424
231013	91-389	LG 538
231023	94-018	LG 565
231024	94-029	LG 414
231025	94-019	LG 570
231029	94-011	LG 572
231921	94-026	LG 369
232202	75-579	LG 335
232222	75-566	LG 334
235361	75-589	LG 335
240302	75-532	LG 334
261017	75-221	LG 280
261019	75-338	LG 334
261076	75-582	LG 254
261111	75-072	LG 268
261204	48-148	LG 695
261212	75-212	LG 268
261389	75-128	LG 253
261440	75-180	LG 254
261442	75-130	LG 269
261458	75-131	LG 269
263045	75-114	LG 281
2631443	75-446	LG 334
263213	75-437	LG 334
263289	75-489	LG 335
263318	75-487	LG 335
26332	75-435	LG 334
263346	75-547	LG 334
263511	75-222	LG 252
263543	75-443	LG 334
263619	75-535	LG 334
263643	75-223	LG 269
263661	75-558	LG 253
263861	75-546	LG 334
263945	75-491	LG 335
264023	75-240	LG 297
264030	75-586	LG 335
264143	75-036	LG 297
264173	75-188	LG 256
264205	75-552	LG 334
264339	75-010	LG 311
265030	75-585	LG 335
267141	75-441	LG 334
267914	75-144	LG 284
268070	75-572	LG 335
268071	75-573	LG 335
286421	75-464	LG 334
286423	75-533	LG 334
290488	75-593	LG 335
290763	75-440	LG 334
290778	75-323	LG 334
292001	82-305	LG 908
292037	09-804	LG 233
292083	75-113	LG 281
292087	75-154	LG 312
292088	75-155	LG 312
292089	75-031	LG 278
292100	48-320	LG 238
292102	45-257	LG 245
292110	48-202	LG 694
292181	78-121	LG 827
292202	75-260	LG 312
292203	75-043	LG 312
292204	75-054	LG 312
292265	75-047	LG 313
292285	75-048	LG 313
292286	75-058	LG 255
292472	75-444	LG 334
292587	75-052	LG 313
292668	45-002	LG 237
29312	91-256	LG 437
2936	91-393	LG 485
293670	75-439	LG 334
293671	75-543	LG 334
293672	75-561	LG 334
293673	75-563	LG 253
293674	75-420	LG 334
293675	75-421	LG 334
2937	91-394	LG 489
2938	91-395	LG 493
510040	30-080	LG 205
510081	30-026	LG 208
510084	30-088	LG 203
510085	30-085	LG 203
510093	30-093	LG 206
510122	55-122	LG 770
5102110	30-311	LG 199
5102120	30-303	LG 198
510303	30-095	LG 206
5105403	30-111	LG 217
5108301	30-098	LG 206
510843	30-421	LG 220
514290	75-205	LG 322
514326	31-140	LG 937
514334	31-150	LG 937
514367	31-160	LG 937
542750	75-570	LG 335
91194	91-368	LG 460
91217	91-217	LG 558
91255	91-255	LG 454
91265	91-265	LG 431
91266	91-266	LG 431
91362	75-436	LG 334
91380	91-380	LG 538
91381	91-381	LG 483
91383	91-383	LG 484
91435	91-435	LG 498
91436	91-438	LG 500
91622	91-622	LG 536
91917	91-917	LG 576
91918	91-919	LG 576
94039	94-039	LG 561

LASER

PART No.	OREGON	Page
22003	71-099	LG 956
22004	71-409	LG 956
22005	71-098	LG 956
22006	71-097	LG 956
22008	71-100	LG 956
22009	71-412	LG 956
22085	71-410	LG 956
40211	30-145	LG 184
42055	90-142	LG 368
42056	90-143	LG 368
42057	90-144	LG 368
42058	90-145	LG 368
42059	90-146	LG 368
43010	55-613	LG 211
43011	55-211	LG 191
43016	30-205	LG 219
43016	55-214	LG 209
43026	55-612	LG 211
43030	55-241	LG 214
43031	55-240	LG 214
43032	55-242	LG 214
43036	55-610	LG 191
43038	55-610	LG 191
43052	55-613	LG 211
43055	55-515	LG 211
43068	30-416	LG 214
43070	55-248	LG 215
43075	55-263	LG 214
43078	55-212	LG 209
43079	55-218	LG 209
43084	55-262	LG 215
43087	55-226	LG 212
43091	55-244	LG 215
43108	55-246	LG 214
43111	55-243	LG 215
43112	55-249	LG 215
43113	55-245	LG 215
43118	30-153	LG 216
43707	30-719	LG 212
43997	30-149	LG 211
44005	43-540	LG 936
44016	43-699	LG 936
44163	42-452	LG 867
44217	43-562	LG 936
44976	56-008	LG 687
44977	56-011	LG 687
44980	49-835	LG 611
44982	49-897	LG 617
44983	49-859	LG 616
47002	70-301	LG 959
47031	31-004	LG 929
47043	57-010	LG 677
47045	57-005	LG 677
47046	57-002	LG 677
47047	57-006	LG 677
47050	57-001	LG 677
47052	57-008	LG 677
47053	57-005	LG 677
47054	57-005	LG 677
48015	49-020	LG 631
48026	49-818-0	LG 615
48026	49-885-0	LG 619
48027	49-819-0	LG 615
48027	49-861	LG 615
48028	49-836-0	LG 616
48030	49-801	LG 610
48031	49-803	LG 610
48033	49-805	LG 609
48036	49-885-0	LG 619
48045	49-848	LG 613
48046	49-845	LG 611
48048	49-809	LG 613
48048	49-873	LG 612
48049	49-809	LG 613
48050	49-806	LG 611
48050	49-832	LG 611
48052	49-806	LG 611
48053	49-814	LG 614
48054	49-872	LG 612
48056	49-812	LG 612
48060	49-837-0	LG 615
48061	49-800	LG 610
48062	49-875	LG 612
48063	49-816	LG 612
48066	49-833	LG 611
48067	49-834	LG 611
48069	49-834	LG 611
48070	49-825	LG 606
48071	49-831	LG 612
48072	49-887-0	LG 616
48073	49-822-0	LG 616
48074	49-863	LG 616
48076	49-817-0	LG 616
48077	49-866	LG 617
48078	49-867	LG 618
48079	49-898	LG 618
48139	55-187	LG 631
48140	55-188	LG 631
48141	55-189	LG 631
48143	49-026	LG 769
48144	49-027	LG 769
48145	49-020	LG 631
48150	49-854	LG 615
48151	49-893	LG 617
48152	49-857	LG 619
48153	49-883	LG 618
48154	49-884	LG 619
48157	49-028	LG 769
48158	49-835	LG 611

2019 Aftermarket X-Reference

LASER

PART No.	OREGON	Page
48158	49-847	LG 610
48179	49-868	LG 602
48185	49-897	LG 617
48186	49-899	LG 617
48187	49-902	LG 614
48201	55-340	LG 627
48202	55-342	LG 627
48203	55-343	LG 627
56003	67-009	LG 965
56027	67-005	LG 965
56029	67-018	LG 965
56034	67-017	LG 965
56038	67-002	LG 965
56046	67-011	LG 965
56050	67-019	LG 965
56070	67-010	LG 965
56071	67-015	LG 965
56072	67-012	LG 965
56073	67-020	LG 965
56074	67-001	LG 965
56075	67-013	LG 965
56076	67-003	LG 965
56078	67-007	LG 965
56079	67-008	LG 965
56080	67-004	LG 965
56081	67-001	LG 965
56082	67-014	LG 965
57002	73-014	LG 849
57003	73-003	LG 847
57013	73-006	LG 846
57019	73-023	LG 847
57023	73-008	LG 848
57026	73-017	LG 848
57027	73-018	LG 849
57028	73-019	LG 849
57040	80-740	LG 852
57041	80-742	LG 852
57042	80-741	LG 852
57043	80-743	LG 852
57044	80-746	LG 852
57047	73-028	LG 850
57050	73-031	LG 850
57069	80-749	LG 853
57070	73-001	LG 847
81009	55-460-1	LG 1026
81015	41-925	LG 1014
81016	41-924	LG 1014
81019	41-922	LG 1014
87030	55-255	LG 1019
87040	55-816	LG 988
87041	55-821	LG 988
87047	55-109	LG 773
87048	55-102	LG 773
87096	43-532	LG 936
87099	43-509	LG 936
87106	43-685	LG 936
87135	55-741	LG 1019
90085	30-417	LG 193
90109	30-406	LG 193
90344	30-950	LG 209
91007	91-183	LG 370
91009	95-051	LG 465
91012	198-049	LG 518
91013	98-051	LG 521
91017	98-005	LG 521
91019	91-266	LG 431
91021	91-911	LG 576
91024	91-912	LG 576
91025	91-913	LG 576
91026	91-917	LG 576
91027	91-918	LG 576
91030	198-052	LG 389
91031	198-058	LG 517
91032	198-153	LG 520
91033	198-059	LG 403
91034	97-017	LG 537
91040	93-008	LG 510
91046	91-256	LG 437
91050	91-180	LG 460
91051	91-183	LG 370
91052	91-620	LG 470
91054	91-622	LG 536
91055	91-623	LG 485
91056	91-626	LG 552
91058	90-309	LG 492
91060	98-537	LG 516
91062	91-181	LG 495
91070	97-109	LG 525
91073	93-006	LG 444
91087	91-415	LG 406
91093	91-327	LG 404
91094	91-330	LG 513
91097	95-006	LG 397
91108	91-381	LG 483
91109	91-380	LG 538
91110	95-018	LG 399
91114	99-121	LG 551
91121	94-770	LG 569
91124	98-044	LG 409
91128	98-487	LG 513
91133	98-056	LG 512
91134	98-057	LG 513
91137	99-107	LG 551
91138	99-113	LG 528
91142	95-027	LG 398
91144	191-392	LG 488
91146	98-486	LG 512
91147	98-037	LG 574
91148	91-394	LG 489
91149	98-001	LG 517
91151	98-499	LG 519
91152	91-430	LG 497
91154	98-002	LG 401
91157	95-031	LG 377
91158	91-096	LG 389
91160	93-009	LG 476
91162	93-011	LG 557
91163	91-342	LG 447
91168	91-761	LG 578
91169	91-762	LG 578
91170	91-764	LG 579
91171	97-005	LG 527
91173	97-123	LG 537
91174	97-014	LG 527
91175	97-001	LG 527
91176	91-414	LG 405
91177	95-034	LG 377
91178	91-005	LG 458
91179	95-036	LG 463
91181	95-014	LG 374
91191	91-097	LG 388
91197	91-144	LG 454
91198	91-093	LG 389
91203	91-003	LG 370
91208	95-015	LG 400
91228	91-398	LG 488
91230	95-011	
91231	99-117	LG 556
91233	96-005	
91235	91-713	LG 422
91239	91-714	LG 543
91246	91-805	LG 560
91247	91-806	LG 447
91250	95-024	LG 465
91252	95-023	LG 380
91255	95-014	LG 374
91259	90-618	LG 368
91260	90-619	LG 368
91262	91-393	LG 485
91264	91-395	LG 493
91268	97-119	LG 525
91269	191-015	LG 372
91277	93-010	LG 432
91278	93-013	LG 480
91280	40-402	LG 589
91288	40-316	LG 586
91294	94-040	LG 573
91296	40-840	LG 588
91299	94-017	LG 441
91300	90-620	LG 368
91302	90-621	LG 368
91304	90-622	LG 368
91305	40-141	LG 585
91309	97-105	LG 523
91316	97-107	LG 524
91317	91-242	LG 371
91323	91-352	LG 482
91328	98-019	LG 516
91331	195-032	LG 425
91333	91-383	LG 484
91334	91-436	LG 498
91335	91-438	LG 500
91338	91-403	LG 488
91339	195-003	LG 400
91340	195-005	LG 373
91345	94-032	LG 568
91348	195-033	LG 400
91350	91-715	LG 541
91353	91-389	LG 538
91356	91-804	LG 560
91361	97-105	LG 523
91381	97-003	
91382	97-004	
91384	91-444	LG 457
91386	92-011	LG 490
91392	40-411	LG 589
91393	40-403	LG 589
91395	40-807	LG 585
91400	40-140	LG 584
91407	90-142	LG 368
91408	90-143	LG 368
91409	90-144	LG 368
91410	90-145	LG 368
91411	90-146	LG 368
91428	98-007	LG 401
91431	99-112	LG 556
91434	91-364	LG 481
91440	91-363	LG 481
91462	90-309	LG 492
91466	98-670	LG 512
91468	98-634	LG 405
91485	195-021	LG 468
91487	95-607	LG 397
91489	95-609	LG 376
91492	95-601	LG 423
91513	90-651	LG 457
91514	98-600	LG 85
91519	597-602	LG 524
91520	97-604	LG 525
91521	97-601	LG 527
91533	96-630	LG 556
91544	96-600	LG 569
91548	94-026	LG 369
91552	91-516	LG 457
91553	91-516	LG 457
91553	91-920	LG 576
91554	91-517	LG 457
91569	91-394	LG 489
91571	91-398	LG 488
91573	98-068	LG 389
91575	95-614	LG 375
91576	95-613	LG 463
91591	90-644	LG 561
91593	91-333	LG 406
91594	91-594	LG 534
91595	91-440	LG 408
91597	91-329	LG 409
91598	91-332	LG 412
91599	91-501	LG 413
91600	91-502	LG 477
91601	91-253	LG 415
91602	91-500	LG 416
91605	91-384	LG 487
91606	91-391	LG 489
91609	91-399	LG 493
91611	98-056	LG 512
91614	198-063	LG 513
91615	98-064-1	LG 514
91623	97-010	LG 524
91625	97-014	LG 527
91630	94-019	LG 570
91635	91-762	LG 578
91637	91-766	LG 579
91638	40-141	LG 585
91646	40-408	LG 589
91647	40-514	LG 589
91649	40-518	LG 589
91658	98-061	LG 404
91659	98-066	LG 409
91660	97-024	LG 525
91662	97-018	LG 523
91664	40-130	LG 586
91665	40-411	LG 589
91666	40-121	LG 584

X

LASER

PART No.	OREGON	Page
91667	40-951	LG 587
91668	91-078	LG 490
91669	95-045	LG 374
91670	95-052	LG 398
91671	91-395	LG 493
91672	91-398	LG 488
91682	195-062	LG 376
91683	195-067	LG 380
91684	95-041	LG 401
91687	94-018	LG 565
91688	94-019	LG 570
91689	94-026	LG 369
91690	94-038	LG 568
91691	91-620	LG 470
91694	91-448	LG 482
91695	91-449	LG 492
91698	91-447	LG 538
91699	191-139	LG 491
91700	191-108	LG 484
91704	195-062	LG 376
91706	95-057	LG 380
91707	95-621	LG 402
91715	91-333	LG 406
91716	91-058	LG 411
91717	91-144	LG 454
91718	91-170	LG 437
91719	91-373	LG 383
91730	95-609	LG 376
91732	95-613	LG 463
91733	95-044	LG 465
91736	191-108	LG 484
91737	92-675	LG 484
91738	90-348	LG 484
91742	91-079	LG 485
91743	90-354	LG 488
91746	191-139	LG 491
91747	92-119	LG 492
91748	92-676	LG 491
91750	90-309	LG 492
91761	97-601	LG 527
91763	91-557	LG 545
91764	91-126	LG 548
91766	91-502	LG 477
91768	94-029	LG 414
91771	94-051	LG 570
91778	91-622	LG 536
91779	91-626	LG 552
91823	98-670	LG 512
91824	98-637	LG 512
91853	92-104	LG 485
91854	92-103	LG 487
91873	392-203	LG 442
91874	96-749	LG 433
91875	91-457	LG 502
91876	91-456	LG 502
92001	72-427	LG 1029
92003	72-430	LG 1034
92005	72-437	LG 1030
92009	72-437	LG 1030
92010	72-106	LG 1029
92012	72-107	LG 1029
92013	72-108	LG 1031
92014	72-108	LG 1031
92018	72-410	LG 1030
92020	72-449	LG 1030
92028	66-208	LG 962
92034	71-400	LG 956
92035	71-500	
92036	71-600	LG 956
92037	71-405	LG 956
92038	71-800	LG 956
92039	71-816	LG 956
92041	71-101	LG 956
92042	72-729	LG 1044
92046	72-508	LG 1034
92049	72-436	LG 1034
92052	72-306	LG 1038
92053	72-307	LG 1038
92055	72-318	LG 1042
92058	72-322	LG 1041
92059	72-323	LG 1041
92218	70-371	LG 961
92228	71-511	LG 956
92229	71-104	LG 956
92230	71-105	LG 957
92230	71-106	LG 957
92231	71-407	LG 956
92233	71-096	LG 956
92234	71-403	LG 956
92235	71-102	LG 956
92292	72-420	LG 1047
92324	71-109	LG 956
92325	71-401	LG 956
92326	71-408	LG 957
92327	72-500	LG 1034
92329	72-094	LG 1042
92330	72-311-1	LG 1039
92345	71-003	LG 956
92348	58-064	LG 959
92350	58-072	LG 959
92351	68-204	LG 962
92352	58-077	LG 959
92353	58-077	LG 959
92354	66-209	LG 962
92355	68-211	LG 962
92363	58-075	LG 959
92370	72-001	LG 1031
92371	72-458	LG 1031
92372	72-003	LG 1031
92390	72-131	LG 1041
93009	30-957	LG 209
93010	30-112	LG 218
93011	30-404	LG 192
93013	30-959	LG 219
93014	30-421	LG 220
93016	30-205	LG 219
93017	30-906	LG 185
93019	30-909	LG 186
93021	30-908	LG 185
93023	30-909	LG 186
93029	30-927	LG 187
93030	30-731	LG 180
93034	30-949	LG 209
93036	30-960	LG 187
93040	30-910	LG 186
93043	30-920	LG 186
93044	30-950	LG 209
93046	30-903	LG 186
93048	30-736	LG 185
93049	30-923	LG 186
93050	30-132	LG 179
93051	30-941	LG 219
93054	30-108	LG 180
93055	30-735	LG 181
93058	30-410	LG 220
93059	30-946	LG 207
93060	30-125	LG 206
93061	30-401	LG 193
93062	30-317	LG 194
93065	30-105	LG 179
93066	30-318	LG 193
93067	30-700	LG 180
93068	30-700	LG 180
93069	30-301	LG 217
93074	30-720	LG 180
93075	30-720	LG 180
93076	30-304	LG 199
93077	30-711	LG 218
93078	30-106	LG 179
93079	30-710	LG 181
93080	30-710	LG 181
93081	30-758	LG 209
93084	30-954	LG 220
93085	30-417	LG 193
93086	30-400	LG 193
93087	30-403	LG 192
93092	83-300	LG 819
93095	30-134	LG 180
93096	30-107	LG 180
93097	83-013	LG 817
93098	83-283	LG 818
93099	83-301	LG 816
93100	83-282	LG 817
93104	30-925	LG 187
93105	30-929	LG 187
93106	30-917	LG 186
93107	30-405	LG 193
93109	30-406	LG 193
93114	30-933	LG 195
93115	30-937	LG 202
93116	30-951	LG 219
93118	30-117	LG 219
93121	83-282	LG 817
93122	83-282	LG 817
93123	83-013	LG 817
93129	30-762	LG 183
93131	30-413	LG 221
93132	30-412	LG 220
93133	30-414	LG 221
93142	30-928	
93144	30-709	LG 194
93146	30-305	LG 198
93147	30-309	LG 199
93149	30-111	LG 217
93153	30-740	LG 218
93156	30-423	LG 221
93160	30-303	LG 198
93162	30-415	
93163	55-201	LG 190
93171	30-403	LG 192
93172	30-410	LG 220
93180	30-430	LG 211
93191	30-322	LG 200
93193	30-432	
93204	30-311	LG 199
93214	69-395	LG 206
93265	30-761	LG 183
93267	30-347	LG 194
93276	83-285	LG 814
93278	83-013	LG 817
93279	30-940	LG 202
93280	30-311	LG 199
93280	30-938	LG 202
93281	30-942	LG 206
93286	30-916	LG 185
93287	30-119	LG 191
93288	30-437	LG 192
93289	30-703	LG 192
93290	30-436	LG 194
93292	30-347	LG 194
93294	30-321	LG 199
93295	30-327	LG 199
93297	30-706	LG 201
93298	30-706	LG 201
93299	55-515	LG 211
93301	30-932	LG 196
93302	30-936	LG 202
93303	30-939	LG 202
93305	30-527	LG 202
93306	30-921	LG 202
93307	30-441	LG 202
93311	30-121	LG 190
93312	30-705	LG 200
93315	30-919	LG 188
93330	30-139	LG 183
93331	30-145	LG 184
93332	30-914	LG 187
93334	30-437	LG 192
93335	30-345	LG 195
93336	30-346	LG 195
93337	30-963	LG 195
93338	30-124	LG 197
93339	30-123	LG 183
93340	83-011	LG 819
93341	83-010	LG 819
93342	83-012	LG 819
93343	83-000	LG 815
94003	60-400	LG 700
94004	60-353	LG 719
94006	60-409	LG 700
94010	60-209	LG 700
94012	60-860	LG 701
94014	60-408	LG 700
94023	35-001	LG 806
94023	35-007	LG 806
94024	35-001	LG 806
94026	35-023	LG 806
94031	35-005	LG 806
94032	35-005	LG 806
94033	35-004	LG 806
94034	35-004	LG 806
94035	35-003	LG 809
94036	35-003	LG 809
94037	35-008	LG 808

2019 Aftermarket X-Reference

LASER

PART No.	OREGON	Page
94038	35-006	LG 808
94039	35-006	LG 808
94039	35-010	LG 809
94039	35-026	LG 807
94045	35-002	LG 806
94045	35-023	LG 806
94046	35-032	LG 809
94048	35-014	LG 806
94052	35-016	LG 809
94053	35-016	LG 809
94056	35-021	LG 810
94062	35-023	LG 806
94063	35-023	LG 806
94064	35-005	LG 806
94066	35-001	LG 806
94066	35-007	LG 806
94070	35-026	LG 807
94071	35-004	LG 806
94075	35-022	LG 807
94076	35-027	LG 807
94093	49-041-0	LG 749
94094	49-040-0	LG 749
94095	49-045	LG 749
94096	49-045	LG 749
94102	49-047	LG 749
94110	49-208	LG 756
94111	49-207	LG 756
94112	49-194	LG 755
94114	49-069	LG 746
94116	50-101	LG 746
94120	50-204	LG 758
94122	50-206	LG 758
94133	36-001	
94148	50-411	LG 745
94152	50-407	LG 758
94155	50-543	LG 748
94156	50-544	LG 747
94157	50-542	LG 747
94158	50-025-0	LG 747
94159	50-027	LG 747
94161	50-541	LG 747
94163	49-412	LG 745
94166	50-032	LG 759
94168	50-033	LG 759
94169	50-415	LG 751
94172	50-417	LG 751
94173	49-016	LG 759
94175	49-355	LG 746
94176	50-418	LG 751
94177	50-416	LG 751
94178	49-153	LG 758
94180	50-502	LG 756
94184	49-099	LG 748
94187	50-302	LG 758
94207	36-005	LG 750
94208	36-022	LG 750
94212	36-044	LG 754
94213	36-042	LG 754
94215	36-101	LG 750
94216	36-100	LG 750
94219	36-103	LG 750
94249	36-102	LG 750
94254	36-140	LG 755
94255	36-141	LG 755
94256	36-142	LG 755
94257	36-143	LG 755
94258	36-104	LG 750
94259	36-244	LG 754
94260	36-245	LG 754
94261	36-243	LG 754
94262	49-411	LG 759
94264	49-150	LG 758
94267	36-523	LG 755
94268	36-325	LG 755
94271	36-521	LG 755
94277	36-522	LG 755
94279	36-326	LG 755
94283	50-041	LG 757
94288	50-553	LG 752
94290	50-554	LG 753
94293	49-107	LG 749
94294	49-100	LG 749
94295	49-112	LG 749
94296	50-556	LG 753
94298	49-132	LG 749
94299	49-120	LG 759
94302	50-548	LG 759
94310	49-115	LG 746
94324	49-111	LG 748
94327	49-131	LG 745
94330	49-160	LG 747
94332	49-119	LG 746
94336	49-129	LG 745
94339	49-123	LG 746
94341	49-114	LG 746
94343	50-546	LG 748
94344	50-545	LG 748
94347	49-095	LG 746
94348	49-067	LG 748
94349	49-067	LG 748
94350	49-109	LG 748
94352	49-110	LG 746
94359	49-204	LG 749
94360	35-012	LG 806
94362	35-028	LG 810
94363	35-015	LG 810
94365	49-401	LG 605
94366	60-160	LG 701
94367	60-522	LG 715
94368	60-008	LG 703
94370	60-420	LG 717
94371	60-427	LG 717
94382	49-193	LG 756
94384	49-207	LG 756
94386	60-012-0	LG 712
94389	46-319	LG 712
94392	46-323	LG 712
94393	46-321	LG 707
94394	49-841	LG 626
94396	35-038	LG 808
94410	46-325	LG 701
94411	60-000	LG 702
94412	60-004	LG 701
94413	60-003	LG 710
94414	60-124	LG 710
94415	60-002	LG 710
94416	60-006	LG 716
94417	35-034	LG 807
94425	33-013	LG 949
94432	36-246	LG 754
94434	36-046	LG 754
94435	36-143	LG 755
94439	50-555	LG 753
94442	50-412	LG 745
94444	50-419	LG 751
94451	71-109	LG 956
94453	71-105	LG 957
94454	71-283	LG 957
94457	60-014	LG 712
94464	50-428	LG 752
94466	50-432	LG 753
94467	50-431	LG 753
94470	49-181	LG 752
94471	49-182	LG 752
94472	49-183	LG 752
94473	50-420	LG 751
94474	49-184	LG 752
94475	49-184	LG 752
94476	49-185	LG 752
94477	49-186	LG 751
94478	50-421	LG 751
94479	49-187	LG 752
94480	49-187	LG 752
94482	49-189	LG 752
94484	49-190	LG 752
94485	49-191	LG 752
94486	49-191	LG 752
94488	49-192	LG 752
94489	50-422	LG 751
94491	49-143	LG 752
94496	50-437	LG 745
94500	50-428	LG 752
94502	35-036	LG 807
94508	35-044	LG 808
94509	60-210	LG 700
94510	60-059	LG 706
94514	60-079	LG 709
94518	46-320	LG 707
94519	46-004	LG 707
94520	60-025-0	LG 716
94521	60-030-0	LG 716
94522	60-032-0	LG 716
94523	60-033-0	LG 716
94524	46-315	LG 717
94525	46-327	LG 717
94526	46-328	LG 717
94527	46-330	LG 701
94527	50-441	LG 748
94528	50-445	LG 748
94529	50-448	LG 748
94530	36-530	LG 755
94531	36-531	LG 755
94534	36-535	LG 755
94537	35-041	LG 808
94539	35-043	LG 808
94540	35-045	LG 808
94625	46-327	LG 717
95010	45-257	LG 245
95011	45-295	LG 232
95012	45-112	LG 241
95013	45-012	LG 224
95015	45-000	LG 237
95015	45-010	LG 238
95033	45-087	LG 243
95034	45-088	LG 240
95037	45-091	LG 249
95038	45-092	LG 854
95040	45-094	LG 249
95041	45-082	LG 854
95042	45-095	LG 855
95045	45-098	LG 243
95046	45-079	LG 249
95047	45-083	LG 246
95051	45-100	LG 239
95052	45-006	LG 249
95053	45-007	LG 853
95055	45-013	LG 853
95056	45-035	LG 226
95057	45-003	LG 244
95057	45-098	LG 243
95065	45-220	LG 232
95070	45-082	LG 854
95076	45-048	LG 854
95080	45-205	LG 228
95083	45-022	LG 243
95090	43-100	LG 932
95091	43-200	LG 932
95092	55-811	LG 933
95094	43-014	LG 932
95097	34-035	LG 821
95098	34-036	LG 821
95099	34-038	LG 821
95100	44-353	LG 840
95101	34-002	LG 821
95102	34-005	LG 821
95103	34-006	LG 821
95104	34-009	LG 821
95105	34-017	LG 821
95106	34-018	LG 821
95107	34-035	LG 821
95108	34-031	LG 821
95109	34-037	LG 821
95111	44-306	LG 840
95114	44-312	LG 840
95115	44-313	LG 840
95117	44-319	LG 840
95118	44-321	LG 840
95119	44-322	LG 840
95121	34-020	LG 821
95122	34-019	LG 821
95126	34-014	LG 831
95127	78-121	LG 827
95129	34-044	LG 821
95130	44-301	LG 840
95132	44-310	LG 840
95137	34-820	LG 833
95138	34-822	LG 832
95139	44-370	LG 834
95140	44-316	LG 840
95141	44-318	LG 840
95145	34-012	LG 821
95146	34-015	LG 821
95147	34-030	LG 821
95148	34-034	LG 821

X

LASER

PART No.	OREGON	Page
95149	34-011	LG 821
95150	44-100	LG 837
95163	75-098	LG 251
95165	75-433	LG 334
95169	75-440	LG 334
95176	75-936	LG 290
95179	75-470	LG 335
95181	75-108	LG 289
95182	75-097	LG 289
95184	75-099	LG 262
95185	75-469	LG 335
95187	75-365	LG 862
95188	75-029	LG 253
95199	75-281	LG 301
95201	75-021	LG 274
95204	75-119	LG 302
95206	75-554	LG 334
95208	75-029	LG 253
95210	75-028	LG 302
95211	75-145	LG 300
95212	75-340	LG 334
95214	75-038	LG 307
95215	75-340	LG 334
95216	75-065	LG 307
95217	75-557	LG 334
95220	75-061	LG 307
95223	75-026	LG 307
95224	75-045	LG 307
95228	75-111	LG 306
95231	75-136	LG 309
952321	75-136	LG 309
95235	75-168	LG 310
95238	75-275	LG 322
95241	75-466	LG 334
95242	75-075	LG 322
95243	75-910	LG 331
95246	75-060	LG 322
95247	75-066	LG 251
95247	75-068	LG 318
95248	75-073	LG 319
95266	75-400	LG 335
95267	75-421	LG 334
95268	75-422	LG 334
95269	75-423	LG 334
95270	75-424	LG 334
95271	75-425	LG 334
95272	75-426	LG 334
95273	75-427	LG 334
95274	75-428	LG 334
95275	75-429	LG 334
95277	75-431	LG 334
95278	75-432	LG 334
95279	75-433	LG 334
95280	75-434	LG 334
95281	75-435	LG 334
95282	75-436	LG 334
95283	75-437	LG 334
95284	75-438	LG 334
95285	75-439	LG 334
95286	75-440	LG 334
95287	75-441	LG 334
95288	75-442	LG 334
95289	75-443	LG 334
95290	75-444	LG 334
95291	75-445	LG 334
95292	75-446	LG 334
95293	75-447	LG 334
95294	75-448	LG 334
95295	75-449	LG 334
95296	75-450	LG 334
95297	75-451	LG 334
95298	75-452	LG 334
95299	75-453	LG 334
95300	75-454	LG 334
95301	75-455	LG 334
95302	75-456	LG 334
95303	75-457	LG 334
95304	75-458	LG 334
95305	75-459	LG 334
95306	75-460	LG 334
95307	75-461	LG 334
95308	75-462	LG 334
95309	75-463	LG 334
95310	75-464	LG 334
95311	75-465	LG 334
95312	75-466	LG 334
95313	75-467	LG 334
95314	75-468	LG 334
95315	75-469	LG 335
95316	75-470	LG 335
95317	75-471	LG 335
95318	75-472	LG 335
95319	75-473	LG 335
95320	75-474	LG 335
95321	75-475	LG 335
95322	75-476	LG 335
95323	75-477	LG 335
95324	75-478	LG 335
95325	75-479	LG 335
95326	75-480	LG 335
95327	75-481	LG 335
95328	75-482	LG 335
95329	75-483	LG 335
95330	75-484	LG 335
95331	75-485	LG 335
95332	75-486	LG 335
95333	75-487	LG 335
95334	75-488	LG 335
95335	75-489	LG 335
95336	75-490	LG 335
95337	75-491	LG 335
95338	75-492	LG 335
95339	75-493	LG 335
95340	75-494	LG 335
95341	75-495	LG 335
95342	75-496	LG 335
95343	75-497	LG 335
95344	75-498	LG 335
95345	75-499	LG 335
95346	75-500	LG 335
95349	75-525	LG 334
95351	75-527	LG 334
95352	75-528	LG 334
95353	75-529	LG 334
95354	75-530	LG 334
95355	75-531	LG 334
95356	75-532	LG 334
95357	75-533	LG 334
95358	75-534	LG 334
95359	75-535	LG 334
95360	75-536	LG 334
95361	75-537	LG 334
95362	75-538	LG 334
95363	75-539	LG 334
95364	75-540	LG 334
95365	75-541	LG 334
95366	75-542	LG 334
95367	75-543	LG 334
95368	75-544	LG 334
95369	75-545	LG 334
95370	75-546	LG 334
95371	75-547	LG 334
95372	75-548	LG 334
95373	75-549	LG 334
95374	75-550	LG 334
95375	75-551	LG 334
95376	75-552	LG 334
95377	75-553	LG 334
95378	75-554	LG 334
95379	75-555	LG 334
95380	75-556	LG 334
95381	75-557	LG 334
95382	75-558	LG 253
95383	75-559	LG 334
95384	75-560	LG 334
95385	75-561	LG 334
95386	75-562	LG 334
95387	75-563	LG 253
95388	75-564	LG 334
95389	75-565	LG 253
95390	75-566	LG 334
95391	75-567	LG 334
95392	75-568	LG 334
95393	75-569	LG 335
95394	75-570	LG 335
95395	75-571	LG 335
95396	75-572	LG 335
95397	75-573	LG 335
95398	75-574	LG 335
95399	75-575	LG 335
95400	75-576	LG 335
95401	75-577	LG 335
95402	75-578	LG 335
95403	75-579	LG 335
95404	75-580	LG 335
95405	75-581	LG 335
95406	75-582	LG 254
95407	75-583	LG 335
95408	75-584	LG 335
95409	75-585	LG 335
95410	75-586	LG 335
95411	75-587	LG 335
95412	75-588	LG 335
95413	75-589	LG 335
95414	75-590	LG 335
95415	75-591	LG 335
95416	75-592	LG 335
95417	75-593	LG 335
95418	75-594	LG 335
95419	75-595	LG 335
95420	75-596	LG 335
95421	75-597	LG 335
95422	75-598	LG 335
95423	75-599	LG 335
95473	45-259	LG 224
95474	45-000	LG 237
95474	45-010	LG 238
95475	45-242	LG 243
95481	75-326	LG 334
95482	75-327	LG 334
95483	75-328	LG 334
95484	75-329	LG 334
95485	75-330	LG 334
95487	75-332	LG 334
95488	75-333	LG 334
95489	75-334	LG 334
95490	75-335	LG 334
95491	75-336	LG 334
95492	75-337	LG 334
95493	75-338	LG 334
95494	75-339	LG 334
95495	75-340	LG 334
95496	75-341	LG 334
95497	75-342	LG 334
95498	75-343	LG 334
95499	75-344	LG 334
95500	75-345	LG 334
95501	75-346	LG 334
95503	75-348	LG 334
95504	75-349	LG 334
95505	75-350	LG 334
95515	34-826	LG 833
95516	34-824	LG 832
95518	31-063	LG 932
95519	75-099	LG 262
95520	75-197	LG 262
95521	75-240	LG 297
95522	75-221	LG 280
95524	75-058	LG 255
95525	75-072	LG 268
95527	75-212	LG 268
95529	75-582	LG 254
95530	75-955	LG 278
95531	75-181	LG 280
95532	75-226	LG 281
95534	75-177	LG 281
95536	75-113	LG 281
95540	75-114	LG 281
95543	75-498	LG 335
95545	75-672	LG 294
95546	75-540	LG 334
95547	75-464	LG 334
95548	75-405	LG 335
95549	75-246	LG 295
95550	75-148	LG 300
95552	75-036	LG 297
95555	75-055	LG 255
95556	75-260	LG 312
95557	75-043	LG 312
95558	75-054	LG 312
95559	75-586	LG 335
95560	75-052	LG 313
95562	75-044	LG 313
95564	31-067	LG 935

2019 Aftermarket X-Reference

LASER

PART No.	OREGON	Page
95565	33-110	LG 735
95566	33-111	LG 735
95567	33-112	LG 735
95568	33-113	LG 740
95570	75-091	LG 302
95571	75-020	LG 302
95572	75-158	LG 251
95573	75-435	LG 334
95575	75-444	LG 334
95576	75-090	LG 301
95577	75-338	LG 334
95579	33-126-1	LG 736
95580	33-126-1	LG 736
95580	33-139	LG 736
95582	75-655	LG 274
95583	75-656	LG 274
95585	75-658	LG 275
95586	75-659	LG 275
95590	75-496	LG 335
95591	75-676	LG 304
95592	75-016	LG 301
95593	75-161	LG 255
95594	75-249	LG 305
95595	75-159	LG 303
95596	75-035	LG 302
95597	75-673	LG 305
95598	75-677	LG 304
95599	75-005	LG 307
95600	75-063	LG 307
95601	75-135	LG 308
95602	75-679	LG 309
95603	75-685	LG 324
95604	75-686	LG 324
95605	44-101	LG 837
95606	44-101	LG 837
95606	44-102	LG 85
95607	44-367	LG 838
95608	78-118-0	LG 830
95609	31-041	LG 932
95618	75-000	LG 262
95619	75-107	LG 254
95620	75-021	LG 274
95621	75-002	LG 301
95622	75-159	LG 303
95623	75-919	LG 293
95624	75-992	LG 293
95642	34-209	LG 826
95643	34-100	LG 830
95645	34-102	LG 830
95646	34-103	LG 830
95647	34-104	LG 830
95648	34-106	LG 830
95649	34-107	LG 823
95650	34-109	LG 831
95652	45-207	LG 236
95654	45-216	LG 224
95656	45-225	LG 232
95657	45-227	LG 234
95662	45-241	LG 224
95663	45-244	LG 224
95664	45-245	LG 224
95666	45-253	LG 224
95667	45-254	LG 224
95668	45-255	LG 224
95669	45-256	LG 224
95674	78-025	LG 829
95675	78-112	LG 829
95676	78-113	LG 829
95677	78-114	LG 829
95678	78-129	LG 830
95679	44-371	LG 834
95680	44-331	LG 841
95681	44-339	LG 841
95682	44-369	LG 837
97006	82-502	LG 894
97007	65-221	LG 341
97013	65-220	LG 340
97014	65-206	LG 342
97016	65-208	LG 342
97024	82-493	LG 869
97038	74-732	LG 721
97040	74-054	LG 721
97041	74-072	LG 721
97059	81-012	LG 802
97065	76-067-0	LG 726
97069	76-070-0	LG 726
97071	76-073-0	LG 726
97080	45-117	LG 938
97107	45-103	LG 938
97108	45-104	LG 939
97110	45-114	LG 938
97111	45-301	LG 804
97112	45-302	LG 804
97113	45-305	LG 804
97114	45-306	LG 804
97124	82-678	LG 904
97125	82-500	LG 893
97129	82-013	LG 891
97131	85-012	LG 909
97132	85-001	LG 908
97133	82-677	LG 903
97134	82-514	LG 869
97135	82-243	LG 902
97137	33-399	LG 944
97138	82-679	LG 870
97139	82-680	LG 870
97173	49-016	LG 759
97174	74-317	LG 721
97180	76-110	LG 726
97185	65-222	LG 341
97187	46-310	LG 713
97190	46-300	LG 717
97196	84-004	LG 675
97197	84-002	LG 675
97198	84-001	LG 675
97199	84-007	LG 675
97200	84-006	LG 675
97201	80-036	LG 727
97202	80-014	LG 727
97206	71-002	LG 957
97207	71-001	LG 957
97208	82-501	LG 894
97213	82-225	LG 871
97214	85-017	LG 907
97225	48-001	LG 914
97228	84-010	LG 913
97230	31-232	LG 937
97231	31-240	LG 937
97232	31-242	LG 937
97233	31-250	LG 937
97234	31-252	LG 937
97235	31-260	LG 937
97252	43-400-0	LG 936
97263	31-914	LG 930
97265	31-100	LG 929
97267	31-904	LG 930
97269	31-909	LG 928
97271	31-908	LG 929
97272	31-908	LG 929
97273	31-909	LG 928
97275	31-910	LG 929
97276	31-911	LG 929
97277	31-050	LG 924
97287	43-404	LG 928
97288	43-011	LG 935
97289	43-012	LG 927
97290	31-051	LG 924
97292	31-052	LG 923
97299	49-058	LG 768
97300	49-079	LG 768
97318	49-034	LG 630
97403	73-560	LG 844
97437	86-009	LG 781
97467	33-003	LG 926
97491	82-503	LG 895
97492	65-006	LG 340
97493	65-007	LG 342
97495	85-005	
97497	82-495	LG 870
97502	32-101	LG 676
97503	32-105	LG 676
97504	32-107	LG 676
97505	32-111	LG 676
97506	32-112	LG 676
97507	32-114	LG 676
97508	32-116	LG 676
97514	33-005	LG 927
97515	31-907	LG 929
97521	42-008	LG 945
97522	33-386	LG 942
97523	43-425	LG 936
97525	43-426	LG 936
97531	55-125	LG 771
97539	33-207	LG 949
97540	33-385	LG 942
97544	82-511	LG 895
97545	82-512	LG 895
97546	82-513-2	LG 896
97547	82-515	LG 896
97548	82-516	LG 896
97549	82-511	LG 895
97550	85-010	
97551	82-512	LG 895
97553	82-515	LG 896
97583	45-109	LG 939
97585	82-510	LG 872
97586	82-220	LG 871
97588	31-232	LG 937
97589	31-240	LG 937
97590	31-242	LG 937
97591	31-250	LG 937
97592	31-252	LG 937
97593	55-126	LG 771
97596	84-011	LG 675
97596	84-101	LG 954
97600	86-037	LG 781
97602	33-709	LG 916
97602	33-779	LG 916
97604	33-708	LG 915
97605	33-700	LG 915
97606	33-704	LG 919
97607	33-707	LG 920
97609	33-719	LG 915
97611	33-710	LG 918
97612	33-715	LG 919
97613	33-702	LG 919
97616	33-718	LG 919
97618	33-720	LG 920
97621	33-716	LG 921
97622	33-712	LG 921
97624	33-714	LG 918
97631	65-226	LG 341
97635	82-332	LG 891
97636	82-333	LG 892
97641	85-023	LG 907
97642	82-221	LG 872
97644	33-399	LG 944
97645	33-392	LG 944
97648	33-006	LG 927
97649	33-759-0	LG 926
97651	33-760-0	LG 926
97652	33-761	LG 926
97653	33-751	LG 927
97657	33-754	LG 927
97658	31-057	LG 930
97659	31-065	LG 922
97660	31-061	LG 922
97661	31-062	LG 922
97662	31-060	LG 922
97663	31-052	LG 923
97665	31-058	LG 931
97666	45-132	LG 939
97667	82-100	LG 802
97672	33-700	LG 915
97683	31-083	LG 930
97685	31-087	LG 930
97687	31-068	LG 922
97688	31-049	LG 923
97688	31-060	LG 922
97689	31-070	LG 922
97692	31-070	LG 922
97693	31-066	LG 923
97696	82-015	
97697	82-019	LG 875
97698	82-017	LG 875
97699	82-018	LG 875
97700	82-016	LG 875
97701	82-320	LG 874
97702	82-411	LG 878
97703	82-322	LG 883
97704	82-323	LG 883
97708	82-344	LG 885
97710	82-346	LG 885
97711	82-347	LG 885

LASER

PART No.	OREGON	Page
97712	82-348	LG 885
97713	82-318	LG 884
97716	82-318	LG 884
97717	82-349	LG 886
97718	82-328	LG 891
97719	82-308	LG 874
97720	82-354	LG 892
97721	82-355	LG 892
97722	82-356	LG 893
97725	82-245	
97727	82-325	LG 903
97728	82-674	LG 904
97729	82-675	LG 904
97730	82-676	LG 904
97732	33-735	LG 917
97733	33-728	LG 917
97738	31-057	LG 930
97739	31-064	LG 931
97740	31-081	LG 936
97741	43-426	LG 936
97760	82-411	LG 878
97761	82-358	LG 892
97762	82-359	LG 893
97763	82-360	LG 893
97764	65-204	LG 342
97765	33-117	LG 733
97766	33-130	LG 733
97767	33-114	LG 734
97768	33-118-1	LG 733
97769	33-119-1	LG 734
97770	33-120	LG 734
97771	33-121	LG 734
97772	33-122-1	LG 734
97773	33-104	LG 735
97776	33-132	LG 735
97777	33-183	LG 735
97778	33-124	LG 736
97779	33-126-1	LG 736
97780	33-133	LG 736
97781	33-134	LG 736
97782	33-139	LG 736
97783	33-184	LG 737
97784	33-115	LG 738
97785	33-127	LG 737
97786	33-135	LG 737
97787	33-136	LG 737
97788	33-137	LG 737
97789	33-138	LG 738
97790	33-185	LG 737
97791	33-187	LG 738
97792	33-116	LG 735
97793	33-128-1	LG 741
97794	33-188	LG 738
97795	33-189	LG 740
97796	33-190	LG 741
97798	82-026	LG 872
97803	85-028	LG 908
97804	85-029	LG 909
98008	49-083	LG 913
98020	55-110	LG 765
98069	49-667	LG 750
98081	49-101	LG 602
98082	49-101	LG 602
98083	49-693	LG 602
98085	49-201	LG 608
98086	49-401	LG 605
98087	49-071	LG 602
98089	49-070	LG 604
98090	49-301	LG 606
98092	49-102	LG 602
98096	49-827	LG 608
98097	49-846	LG 608
98098	49-213	LG 623
98101	49-008	LG 623
98103	49-004	LG 622
98104	49-003	LG 622
98105	49-002	LG 623
98106	49-006	LG 622
98107	49-006	LG 622
98108	49-005	LG 622
98110	49-039	LG 629
98113	49-077	LG 628
98114	49-025	LG 629
98115	49-035	LG 629
98116	49-307	LG 625
98117	49-840	LG 609
98123	49-989	LG 602
98124	49-128	LG 747
98125	49-036	LG 628
98130	49-007	LG 622
98132	49-133	LG 609
98133	49-978	LG 609
98134	49-009	LG 625
98135	49-230	LG 609
98136	49-033	LG 628
98138	49-001	LG 622
98146	49-363	LG 624
98149	33-182-0	LG 789
98156	33-606	LG 789
98159	33-628	LG 789
98163	33-601	LG 789
98164	33-628	LG 789
98170	33-208	LG 866
98171	33-070	LG 742
98183	33-008	LG 789
98189	33-016	LG 789
98190	33-333	LG 786
98191	33-363	LG 787
98192	33-362	LG 784
98194	33-362	LG 784
98195	33-345	LG 784
98197	33-320-0	LG 731
98200	33-346	LG 786
98201	33-365	LG 784
98204	33-343	LG 787
98205	33-340	LG 784
98206	33-342	LG 784
98207	33-344	LG 784
98209	33-348	LG 785
98212	33-330	LG 729
98214	33-332	LG 730
98215	33-334	LG 730
98216	33-335	LG 730
98220	33-053	LG 789
98223	33-201	LG 867
98232	47-161	LG 744
98236	47-014	LG 743
98238	47-038	LG 743
98249	47-080	LG 744
98250	47-081	LG 744
98251	47-160	LG 744
98253	33-394	LG 944
98254	33-388	LG 943
98255	33-023	LG 949
98256	33-397	LG 942
98257	33-398	LG 944
98258	33-023	LG 949
98258	33-317-0	LG 729
98259	33-337	LG 730
98260	33-341	LG 784
98263	49-231	LG 630
98267	33-186	LG 789
98268	33-419	LG 732
98269	49-070	LG 604
98271	49-085	LG 769
98275	33-347	LG 784
98276	33-402	LG 731
98277	49-305	LG 603
98278	49-078	LG 603
98279	49-038	LG 628
98281	49-840	LG 609
98284	50-638	LG 596
98288	49-230	LG 609
98290	49-913	LG 624
98292	50-634	LG 597
98293	49-915	LG 597
98294	50-637	LG 597
98295	50-638	LG 596
98298	49-853	LG 611
98299	49-877	LG 613
98300	49-882-0	LG 613
98301	49-216	LG 602
98302	49-145	LG 603
98303	49-146	LG 603
98304	49-147	LG 603
98305	49-148	LG 603
98306	49-220	LG 603
98307	49-221	LG 604
98308	49-222	LG 604
98309	49-223	LG 604
98310	49-149	LG 604
98311	49-201	LG 608
98312	49-993	LG 624
98313	49-995	LG 625
98314	49-912	LG 624
98316	49-911	LG 624
98317	55-157	LG 763
98320	49-224	LG 623
98328	33-352-0	LG 784
98329	33-353	LG 785
98330	33-518	LG 785
98331	33-519	LG 785
98333	49-997	LG 628
98334	49-996	LG 629
98339	33-542	LG 950
98342	33-418	LG 731
98343	33-417	LG 731
98344	33-402	LG 731
98348	33-407	LG 732
98352	33-319-0	LG 729
98353	33-318-0	LG 729
98360	49-307	LG 625
98369	49-214	LG 624
98370	49-362	LG 624
98371	33-521	LG 785
98372	33-520	LG 785
98373	33-522	LG 785

LOWES

128568	195-032	LG 425
149120	97-020	LG 526
188356	98-061	LG 404
19889	195-005	LG 373
228458	91-039	LG 487
228459	191-108	LG 484
228461	92-104	LG 485
230601	92-011	LG 490
230611	97-001	LG 527
272788	95-057	LG 380
272798	95-615	LG 426
36480	98-051	LG 521
41347	198-059	LG 403
95128	198-049	LG 518
HU22054	195-072	LG 530

MENARDS

2704655	98-629	LG 412
2705003	195-032	LG 425
2705004	195-005	LG 373
2705005	95-052	LG 398
2705006	195-033	LG 400
2705007	191-392	LG 488
2705008	91-389	LG 538
2705009	91-039	LG 487
2705012	195-003	LG 400
2705022	195-067	LG 380
2705023	195-062	LG 376

MOWMORE

AR16A	91-003	LG 370
AR20	91-005	LG 458
BB587	48-145	LG 698
BC16A	93-009	LG 476
BC16B	93-005	LG 447
BC18A	93-010	LG 432
BC18C	93-006	LG 444
BC21A	93-008	LG 510
BC21B	93-011	LG 557
BC21C	93-013	LG 480
BC25	93-025	LG 482
BO111	75-072	LG 268
BO730	75-326	LG 334
BO731	75-336	LG 334
BO8803	75-180	LG 254
BO8809	75-130	LG 269
BO8810	75-095	LG 268
BO8811	75-125	LG 269
BOP01A	34-024	LG 822
BOP12A	78-649	LG 841
BOP183	78-678	LG 835
BOP18N	78-641	LG 835

2019 Aftermarket X-Reference

MOWMORE

PART No.	OREGON	Page
BOP22B	78-643	LG 835
BOP813	78-020	LG 825
BU16C	91-256	LG 437
BU18HL	91-256	LG 437
BUP246	78-646	LG 841
BUP786	78-041	LG 823
BUP7861	34-007	LG 826
BUP7918	78-121	LG 827
BUP88	78-031	LG 826
CC0361	92-139	LG 398
CC0362	98-091	LG 516
CC0363	98-071	LG 411
CC10383	91-144	LG 454
CC10636	91-073	LG 512
CC11250	92-015	LG 407
CC11479	98-087	LG 407
CC11480	198-086	LG 565
CC11805	98-080	LG 512
CC15	91-414	LG 405
CC16A	91-333	LG 406
CC17	91-415	LG 406
CC18	91-440	LG 408
CC19A	91-329	LG 409
CC21A	91-332	LG 412
CT01	70-340	LG 959
CT02	70-339	LG 959
CT24	70-312	LG 959
CT25	70-317	LG 959
CT28	70-328	LG 959
CT29	70-335	LG 959
CT30	70-338	LG 959
CT31	70-349	LG 959
CT33	70-351	LG 959
CT45	70-316	LG 959
CT46	70-320	LG 959
CT47	70-326	LG 959
CT514	70-307	LG 960
CT694	70-301	LG 959
CT8456	70-315	LG 960
CT8457	70-314	LG 959
CT8540	70-308	LG 959
CT8541	70-330	LG 959
CT8688	70-357	LG 958
CYS2218	48-200	LG 694
CYS2238	09-801	LG 229
CYS2243	48-205	LG 694
CYS6885	09-808	LG 697
CYS6886	09-803	LG 697
CYS7125	48-202	LG 694
CYS8592	09-804	LG 233
DBU5713	45-127	LG 244
DBU8305	45-030	LG 245
DC14	91-501	LG 413
DC17	91-502	LG 477
DC17HL	91-508	LG 419
DC20HL	91-506	LG 473
DC6404	91-507	LG 415
DC6441	91-509	LG 424
DC6442	91-508	LG 419
DC6790	91-505	LG 477
DC6833	91-515	LG 415
DI14	91-500	LG 416
DI15HL	91-167	LG 416
DI17HL	91-508	LG 419
DI19L	91-714	LG 543
DI20	91-253	LG 415
DI6766	91-146	LG 419
DP1191	09-802	LG 233
DP2224	43-075	
DP8372	48-141	LG 249
DUB7262	45-188	LG 230
EBGM	40-140	LG 584
EBS10	40-503	LG 589
EBS276	40-840	LG 588
EBS6788	40-010	LG 588
EBS9	40-402	LG 589
EBS94	40-843	LG 588
EBS94A	40-845	LG 588
EBS98	40-807	LG 585
EBS9A	40-411	LG 589
EBU10	40-409	LG 585
EBU8	40-141	LG 585
EBU9	40-130	LG 586
EN16	91-266	LG 431
EN211	75-260	LG 312
EX0371	90-205	LG 501
EX0372	90-207	LG 472
EX0373	90-208	LG 502
EX10071	91-256	LG 437
EX10667	91-506	LG 473
EX11139	91-311	LG 439
EX11224	92-031	LG 433
EX11229	92-033	LG 442
EX11231	92-029	LG 435
EX11240	92-026	LG 435
EX11241	92-027	LG 432
EX11242	92-028	LG 433
EX11249	92-025	LG 440
EX11267	96-322	LG 567
EX11495	92-030	LG 567
EX12027	492-732	LG 442
EX16	91-183	LG 370
EX16B	91-368	LG 460
EX18	91-184	LG 421
EX18A	91-181	LG 495
EX18C	91-218	LG 420
EX18D	91-170	LG 437
EX18E	91-335	LG 420
EX20	91-378	LG 414
EX20A	91-217	LG 558
EX20B	91-311	LG 439
EX20HL	91-188	LG 439
EX6481	91-374	LG 442
EX6820	91-373	LG 383
EX6821	91-369	LG 434
EX9487	91-313	LG 494
EXL11557	92-044	LG 471
EXL11721	92-045	LG 474
EXL13623	92-738	LG 472
EXP009	34-019	LG 821
EXP095	78-640	LG 835
EXP582	34-023	LG 822
GH13463	91-532	LG 448
GH13464	91-531	LG 393
GH15	91-557	LG 545
GH18	91-558	LG 448
GH18A	91-535	LG 448
GH18HL	91-532	LG 448
GH21,A	91-547	LG 449
GH21A	91-547	LG 449
GH21HL	91-531	LG 393
GH21HLA	91-531	LG 393
GH6401	91-547	LG 449
GH6402	91-544	LG 397
GR14	91-244	LG 450
GR17	91-242	LG 371
GR17A	91-255	LG 454
GR20C	91-253	LG 415
GR20D	91-253	LG 415
GR20E	91-239	LG 454
GR24	91-254	LG 456
GR914	75-144	LG 284
GRP7937	78-021	LG 832
HO21	91-291	LG 457
HO325100	92-101	LG 458
HO325104	92-102	LG 458
HO6430	91-517	LG 457
HO6431	91-516	LG 457
JA07	75-324	LG 334
JA08	75-332	LG 334
JA19	75-561	LG 334
JA21	75-432	LG 334
JA25T	91-352	LG 482
JA63	75-436	LG 334
JA78	75-593	LG 335
JA81	75-541	LG 334
JA85	75-576	LG 335
JA88	75-543	LG 334
JD0284	91-079	LG 485
JD0291	90-348	LG 484
JD0292	90-354	LG 488
JD10074	92-119	LG 492
JD10634	191-108	LG 484
JD10635	191-139	LG 491
JD12380	92-110	LG 491
JD12643	92-114	LG 493
JD16A	91-383	LG 484
JD16B	91-381	LG 483
JD18	91-403	LG 488
JD18A	91-384	LG 487
JD18B	91-380	LG 538
JD20	91-394	LG 489
JD25	91-395	LG 493
JD25A	91-395	LG 493
JD30B	91-399	LG 493
JD330150	91-079	LG 485
JD330437	92-118	LG 488
JD330501	92-113	LG 490
JD38A	191-392	LG 488
JD38B	91-398	LG 488
JD46	91-389	LG 538
JD50	91-393	LG 485
JD60	91-391	LG 489
JD6479	91-078	LG 490
JD6480	91-138	LG 488
JD6737	91-400	LG 488
KU16	91-430	LG 497
KU16A	91-433	LG 498
KU19	91-436	LG 498
KU20B	91-438	LG 500
KU330827	92-116	LG 500
LB21	92-011	LG 490
MB10072	96-364	LG 488
MB10073	396-730	LG 490
MB11279	96-321	LG 436
MB11469	96-749	LG 433
MB11558	396-787	LG 500
MB12733	596-808	LG 472
MB12809	91-938	LG 514
MB12821	90-348	LG 484
MB12919	92-676	LG 491
MB12920	92-675	LG 484
MB13016	96-344	LG 536
MB6294	96-344	LG 536
MB6296	96-310	LG 444
MB6297	96-630	LG 556
MB6298	96-323	LG 477
MB6299	96-347	LG 387
MB6300	96-308	LG 456
MB6301	96-633	LG 556
MB6302	96-628	LG 528
MB6303	96-319	LG 415
MB6308	96-600	LG 569
MB6309	96-329	LG 449
MB6311	96-346	LG 449
MB6312	96-303	LG 416
MB6314	96-332	LG 484
MB6315	96-306	LG 538
MB6316	396-714	LG 413
MB6317	96-620	LG 551
MB6410	94-618	LG 506
MB6415	96-343	LG 395
MB6426	99-617	LG 395
MB6496	96-394	LG 538
MB9883	96-341	LG 446
MB9885	94-615	LG 370
MP7675	33-384	LG 947
MP7922	33-410	LG 947
MTD1015	98-019	LG 516
MTD1021	98-057	LG 513
MTD1022	98-056	LG 512
MTD1024	198-058	LG 517
MTD1026	198-058	LG 517
MTD1029	198-063	LG 513
MTD1030	98-061	LG 404
MTD1031	198-153	LG 520
MTD1032	198-059	LG 403
MTD1037	98-054	LG 574
MTD1038	98-069	LG 404
MTD6003	98-487	LG 513
MTD6006	98-044	LG 409
MTD6019	98-486	LG 512
MTD6028	98-499	LG 519
MTD6126	98-537	LG 516
MTD6139	98-007	LG 401
MTD6143	98-496	LG 515
MTD6423	198-049	LG 518
MTD6424	98-051	LG 521
MTD6425	98-050	LG 521
MTD6438	98-066	LG 409
MTD6439	98-001	LG 517
MU10066	97-022	LG 524
MU1124	97-105	LG 523
MU2013	97-015	LG 527

X

MOWMORE

PART No.	OREGON	Page
MU6027	97-330	LG 528
MU6113	97-123	LG 537
MU6119	97-118	LG 524
MU6144	97-005	LG 527
MU6162	97-020	LG 526
MU6166	97-008	LG 526
MU6174	97-001	LG 527
MU6408	97-017	LG 537
MU6470	97-018	LG 523
MU6471	97-001	LG 527
MU9896	97-012	LG 537
MU9897	97-008	LG 526
PPBU11	75-222	LG 252
PPBU543	75-443	LG 334
PPBU643	75-223	LG 269
PPBU661	75-558	LG 253
PPBU861	75-546	LG 334
PPEN210	75-582	LG 254
PPEN212	75-440	LG 334
PPEX16	75-539	LG 334
PPEX17	75-586	LG 335
PPEX300	75-113	LG 281
PPEX80	75-031	LG 278
PPGR2000	75-533	LG 334
PPGR2037	75-565	LG 253
PPGR3000	75-589	LG 335
PPGV195	75-439	LG 334
PPGV213	75-437	LG 334
PPGV289	75-489	LG 335
PPGV545	75-435	LG 334
PPGV944	75-446	LG 334
PPJA10	75-333	LG 334
PPT0160	75-165	LG 322
SB484	45-295	LG 232
SB814	45-002	LG 237
SC04	75-054	LG 312
SC16	91-620	LG 470
SC16HL	91-621	LG 563
SC18	91-622	LG 536
SC18HL	91-623	LG 485
SC21	91-626	LG 552
SC21HL	91-628	LG 387
SC24	91-627	LG 482
SC285	75-048	LG 313
SC286	75-058	LG 255
SC295	75-568	LG 334
SC44	75-578	LG 335
SC472	75-444	LG 334
SC65	75-047	LG 313
SC81	75-580	LG 335
SC87	75-154	LG 312
SC89	75-055	LG 255
SE10377	95-068	LG 376
SE6038	95-023	LG 380
SE6123	95-036	LG 463
SE6124	195-033	LG 400
SE6196	95-018	LG 399
SE6235	95-051	LG 465
SE6236	195-021	LG 468
SE6263	95-049	LG 459
SE6437	95-045	LG 374
SE6495	95-052	LG 398
SE9170	95-052	LG 398
SE9810	95-057	LG 380
SH1226	82-306	LG 874
SH5999	82-305	LG 908
SK44	75-221	LG 280
SN16A	99-126	LG 501
SN17	91-123	LG 395
SN20SD	99-121	LG 551
SN21A	91-127	LG 396
SN21B	91-127	LG 396
SN21SD	99-103	LG 551
SN21SDA	99-107	LG 551
SN236	75-073	LG 319
SN28	99-113	LG 528
SN30	99-112	LG 556
SN33	99-117	LG 556
SN353	75-585	LG 335
SN496	75-036	LG 297
SN53	75-353	LG 319
SN677	75-594	LG 335
SN680	75-240	LG 297
SN749	75-068	LG 318
SN778	75-491	LG 335
SN779	75-584	LG 335
SN799	75-403	LG 256
SN87	75-325	LG 334
SNP8478	34-021	LG 833
SR-3	31-230	LG 937
SR-4	31-240	LG 937
SR-5	31-250	LG 937
SR-6	31-260	LG 937
T063	71-101	LG 956
T175	71-110	LG 956
T353	71-500	
T403	71-108	LG 957
T441	71-417	LG 957
T453	71-405	LG 956
T459	71-106	LG 957
T488	71-250	LG 956
T503	71-107	LG 957
T553	71-800	LG 956
T641	71-406	LG 956
T726	71-407	LG 956
T726A	71-418	LG 957
T853	71-816	LG 956
T878	71-511	LG 956
T898	71-104	LG 956
T998/TU120	71-098	LG 956
TC768	60-188	LG 718
TC985	60-240	LG 719
TE15	30-141	LG 217
TE81	30-205	LG 219
TE82	30-083	LG 219
te8330	30-740	LG 218
TE84	30-081	LG 205
TE85	30-082	LG 205
TE86	30-080	LG 205
TE8785	30-030	LG 218
TO10928	94-051	LG 570
TO10929	94-322	LG 520
TO11821	94-069	LG 441
TO14C	91-804	LG 560
TO15	94-026	LG 369
TO15A	94-061	LG 561
TO15HL	94-039	LG 561
TO16A	91-806	LG 447
TO18	94-018	LG 565
TO18HLA	94-022	LG 565
TO19C	94-038	LG 568
TO19D	94-032	LG 568
TO20A	94-029	LG 414
TO21A	94-017	LG 441
TO21B	94-770	LG 569
TO21H	94-019	LG 570
TO21R	94-127	LG 569
TO21RA	94-017	LG 441
TO25	94-011	LG 572
TO25C	94-040	LG 573
TO290	75-205	LG 322
TO32	94-021	LG 573
TO320	75-429	LG 334
TO530	75-451	LG 334
TO670	75-043	LG 312
TO750	75-570	LG 335
TO890	75-571	LG 335
TO9171	91-503	LG 424
TS088	71-109	LG 956
TS253	71-275	LG 956
TS662	71-400	LG 956
TS762	71-278	
TS862	71-401	LG 956
TU012	71-408	LG 957
TU405	71-403	LG 956
TU456	71-404	
TU512	71-105	LG 957
TU606S	71-102	LG 956
TU612	71-273	LG 957
TU810	71-100	LG 956
TU825	71-411	LG 956
WA20R	91-911	LG 576
WA22L	91-912	LG 576
WA22R	91-913	LG 576
WA25L	91-917	LG 576
WA25R	91-918	LG 576
WA41	75-535	LG 334
WB5848	45-014	LG 225
WB7950	45-047	LG 241
WB8251	45-038	LG 224
WBOB264	72-796	LG 1043
WBU642	72-745	LG 1033
WJD6915	72-306	LG 1038
WJD6918	72-307	LG 1038
WJD8216	72-099	LG 1040
WJD8244	72-098	LG 1040
WLB79	72-500	LG 1034
WLB80	72-508	LG 1034
WO21	91-761	LG 578
WO21B	91-547	LG 449
WO24	91-764	LG 579
WO6432	91-761	LG 578
WO6434	91-766	LG 579
WO6467	91-762	LG 578
WSC6534	45-031	LG 232
WSN18	72-728	LG 1044
WSN45	75-354	LG 319
WSN83	72-450	LG 1037

PLP

PART No.	OREGON	Page
101-012	30-044	LG 179
101-026	30-132	LG 179
101-028	30-097	LG 179
101-030	30-101	LG 179
101-032	30-700	LG 180
101-034	30-105	LG 179
101-036	30-104	LG 180
101-038	30-094	LG 180
101-044	30-720	LG 180
101-046	30-710	LG 181
101-050	30-106	LG 179
101-052	30-107	LG 180
101-071	30-049	LG 181
101-082	30-134	LG 180
101-242	30-317	LG 194
101-250	30-400	LG 193
101-258	30-405	LG 193
101-264	30-506	LG 195
101-266	30-406	LG 193
101-270	30-403	LG 192
101-280	30-303	LG 198
101-283	30-304	LG 199
101-287	30-305	LG 198
101-291	30-311	LG 199
101-300	30-080	LG 205
101-305	30-093	LG 206
101-308	30-095	LG 206
101-310	30-098	LG 206
101-314	30-125	LG 206
101-322	30-085	LG 203
101-376	30-309	LG 199
101-500	30-430	LG 211
101-600	30-091	LG 217
101-604	30-301	LG 217
101-700	30-070	LG 216
101-702	30-083	LG 219
101-705	30-081	LG 205
101-707	30-082	LG 205
101-715	30-100	LG 217
101-727	30-205	LG 219
101-728	30-112	LG 218
101-731	30-117	LG 219
101-733	30-111	LG 217
101-737	30-141	LG 217
101-739	30-116	LG 219
101-801	30-421	LG 220
101-950	30-412	LG 220
101-952	30-410	LG 220
101-966	30-418	LG 221
103-010	02-531	
103-013	02-535	
103-328	04-721	
103-329	04-722	
103-330	04-723	
105-100	47-081	LG 744
105-101	47-121	LG 744
105-102	47-161	LG 744
105-103	47-201	LG 744
105-111	47-080	LG 744
105-112	47-120	LG 744
105-113	47-160	LG 744
105-114	47-200	LG 744

X

2019 Aftermarket X-Reference

PART No.	OREGON	Page
PLP		
107-001	45-012	LG 224
107-002	45-058	LG 232
107-003	45-112	LG 241
107-004	45-034	LG 224
107-006	45-057	LG 249
107-009	45-128	LG 228
107-033	45-079	LG 249
107-041	48-211	LG 233
107-046	45-257	LG 245
107-087	45-088	LG 240
107-088	45-091	LG 249
107-089	45-108	LG 894
107-092	45-100	LG 239
107-093	45-092	LG 854
107-094	45-082	LG 854
107-098	45-095	LG 855
107-105	45-043	LG 243
107-171	45-620	LG 225
107-201	45-295	LG 232
107-202	45-206	LG 231
107-203	45-205	LG 228
107-204	45-259	LG 224
107-207	45-000	LG 237
107-207	45-010	LG 238
107-208	45-209	LG 246
107-210	45-107	LG 245
107-510	48-320	LG 238
107-511	45-078	LG 230
107-535	45-030	LG 245
107-535	45-124	LG 938
107-601	45-019	LG 239
107-630	45-037	LG 242
107-650	82-244	LG 910
107-652	45-087	LG 243
107-750	45-083	LG 246
107-751	45-081	LG 249
107-830	45-080	LG 249
108-406	75-406	LG 335
108-407	75-407	LG 335
108-409	75-409	LG 335
108-410	75-410	LG 335
108-411	75-411	LG 335
108-413	75-413	LG 335
108-414	75-414	LG 335
108-503	75-503	LG 256
109-006	75-320	LG 334
109-008	75-321	LG 334
109-009	75-322	LG 334
109-010	75-323	LG 334
109-011	75-324	LG 334
109-012	75-325	LG 334
109-014	75-326	LG 334
109-015	75-327	LG 334
109-017	75-328	LG 334
109-019	75-329	LG 334
109-020	75-330	LG 334
109-021	75-331	LG 334
109-022	75-332	LG 334
109-023	75-333	LG 334
109-024	75-334	LG 334
109-025	75-335	LG 334
109-026	75-336	LG 334
109-027	75-337	LG 334
109-028	75-338	LG 334
109-029	75-339	LG 334
109-030	75-340	LG 334
109-031	75-341	LG 334
109-033	75-342	LG 334
109-034	75-343	LG 334
109-035	75-344	LG 334
109-036	75-345	LG 334
109-037	75-346	LG 334
109-039	75-348	LG 334
109-040	75-349	LG 334
109-041	75-350	LG 334
109-061	75-400	LG 335
109-065	75-120	LG 300
109-066	75-420	LG 334
109-068	75-421	LG 334
109-070	75-422	LG 334
109-071	75-423	LG 334
109-072	75-424	LG 334
109-074	75-425	LG 334
109-075	75-426	LG 334
109-076	75-427	LG 334
109-077	75-010	LG 311
109-077	75-428	LG 334
109-079	75-429	LG 334
109-081	75-101	LG 269
109-083	75-431	LG 334
109-085	75-432	LG 334
109-087	75-433	LG 334
109-089	75-434	LG 334
109-091	75-435	LG 334
109-092	75-436	LG 334
109-093	75-437	LG 334
109-094	75-438	LG 334
109-095	75-439	LG 334
109-096	75-440	LG 334
109-097	75-441	LG 334
109-099	75-442	LG 334
109-101	75-443	LG 334
109-102	75-444	LG 334
109-103	75-445	LG 334
109-104	75-446	LG 334
109-105	75-447	LG 334
109-106	75-448	LG 334
109-107	75-449	LG 334
109-108	75-450	LG 334
109-109	75-451	LG 334
109-110	75-452	LG 334
109-111	75-453	LG 334
109-112	75-454	LG 334
109-114	75-455	LG 334
109-116	75-456	LG 334
109-117	75-457	LG 334
109-118	75-458	LG 334
109-119	75-459	LG 334
109-120	75-460	LG 334
109-121	75-461	LG 334
109-122	75-462	LG 334
109-123	75-463	LG 334
109-124	75-464	LG 334
109-125	75-465	LG 334
109-126	75-466	LG 334
109-127	75-467	LG 334
109-128	75-468	LG 334
109-129	75-469	LG 335
109-130	75-470	LG 335
109-131	75-471	LG 335
109-132	75-472	LG 335
109-133	75-473	LG 335
109-134	75-474	LG 335
109-135	75-475	LG 335
109-136	75-476	LG 335
109-137	75-477	LG 335
109-138	75-478	LG 335
109-139	75-479	LG 335
109-140	75-480	LG 335
109-141	75-481	LG 335
109-142	75-482	LG 335
109-143	75-483	LG 335
109-144	75-484	LG 335
109-145	75-485	LG 335
109-146	75-486	LG 335
109-147	75-487	LG 335
109-148	75-488	LG 335
109-149	75-489	LG 335
109-150	75-490	LG 335
109-151	75-491	LG 335
109-152	75-492	LG 335
109-153	75-493	LG 335
109-154	75-494	LG 335
109-155	75-495	LG 335
109-156	75-496	LG 335
109-157	75-497	LG 335
109-158	75-498	LG 335
109-159	75-499	LG 335
109-160	75-500	LG 335
109-163	75-525	LG 334
109-165	75-527	LG 334
109-166	75-528	LG 334
109-167	75-529	LG 334
109-168	75-530	LG 334
109-169	75-531	LG 334
109-170	75-532	LG 334
109-171	75-533	LG 334
109-172	75-534	LG 334
109-173	75-535	LG 334
109-174	75-536	LG 334
109-175	75-537	LG 334
109-176	75-538	LG 334
109-177	75-539	LG 334
109-178	75-540	LG 334
109-179	75-541	LG 334
109-180	75-542	LG 334
109-181	75-543	LG 334
109-182	75-544	LG 334
109-183	75-545	LG 334
109-184	75-546	LG 334
109-185	75-547	LG 334
109-186	75-548	LG 334
109-187	75-549	LG 334
109-188	75-550	LG 334
109-189	75-551	LG 334
109-190	75-552	LG 334
109-191	75-553	LG 334
109-192	75-554	LG 334
109-193	75-555	LG 334
109-194	75-556	LG 334
109-195	75-557	LG 334
109-196	75-558	LG 253
109-197	75-559	LG 334
109-198	75-560	LG 334
109-199	75-561	LG 334
109-200	75-562	LG 334
109-201	75-563	LG 253
109-202	75-564	LG 334
109-203	75-565	LG 253
109-204	75-566	LG 334
109-205	75-567	LG 334
109-206	75-568	LG 334
109-207	75-569	LG 335
109-208	75-570	LG 335
109-209	75-571	LG 335
109-210	75-572	LG 335
109-211	75-573	LG 335
109-212	75-574	LG 335
109-213	75-575	LG 335
109-214	75-576	LG 335
109-215	75-577	LG 335
109-216	75-578	LG 335
109-217	75-579	LG 335
109-218	75-580	LG 335
109-219	75-581	LG 335
109-220	75-582	LG 254
109-221	75-583	LG 335
109-222	75-584	LG 335
109-223	75-585	LG 335
109-224	75-586	LG 335
109-225	75-587	LG 335
109-226	75-588	LG 335
109-227	75-589	LG 335
109-228	75-590	LG 335
109-229	75-591	LG 335
109-230	75-592	LG 335
109-231	75-593	LG 335
109-232	75-594	LG 335
109-233	75-595	LG 335
109-234	75-596	LG 335
109-235	75-597	LG 335
109-236	75-598	LG 335
109-237	75-599	LG 335
109-301	75-179	LG 310
109-309	75-168	LG 310
109-325	75-171	LG 289
109-350	75-098	LG 251
109-352	75-240	LG 297
109-355	75-072	LG 268
109-360	75-212	LG 268
109-366	75-222	LG 252
109-367	75-221	LG 280
109-368	75-223	LG 269
109-386	75-031	LG 278
109-403	75-402	LG 335
109-596	75-122	LG 307
109-600	75-005	LG 307
109-601	75-112	LG 306
109-602	75-111	LG 306
109-605	75-045	LG 307
109-607	75-022	LG 307
109-608	75-026	LG 307
109-609	75-040	LG 306
109-611	75-063	LG 307

PLP

PART No.	OREGON	Page
109-612	75-041	LG 255
109-617	75-061	LG 307
109-622	75-151	LG 308
109-624	75-152	LG 308
109-628	75-145	LG 300
109-629	75-002	LG 301
109-630	75-281	LG 301
109-631	75-018	LG 301
109-633	75-119	LG 302
109-634	75-028	LG 302
109-635	75-027	LG 302
109-647	75-136	LG 309
109-660	75-106	LG 261
109-676	75-115	LG 260
109-685	75-260	LG 312
109-686	75-054	LG 312
109-687	75-036	LG 297
109-691	75-154	LG 312
109-692	75-043	LG 312
109-700	75-068	LG 318
109-701	75-073	LG 319
109-704	75-354	LG 319
109-705	75-105	LG 319
109-706	75-508	LG 319
109-707	75-353	LG 319
109-800	75-075	LG 322
109-806	75-165	LG 322
109-809	75-205	LG 322
109-902	75-631	LG 314
109-903	75-632	LG 314
109-905	75-634	LG 314
109-906	75-635	LG 314
109-908	75-637	LG 253
109-911	75-642	LG 314
109-913	75-724	LG 310
109-942	75-755	LG 258
109-943	75-756	LG 279
109-944	75-759	LG 279
109-986	75-099	LG 262
111-351	80-122	LG 340
111-554	65-220	LG 340
111-556	65-221	LG 341
111-600	65-206	LG 342
111-611	65-208	LG 342
111-752	65-229	LG 342
111-775	79-724	LG 556
111-776	79-728	LG 556
112-001	40-110	LG 584
112-019	40-502	LG 586
112-025	40-402	LG 589
112-039	40-408	LG 589
112-051	40-411	LG 589
112-106	40-519	LG 584
112-110	40-130	LG 586
112-118	40-403	LG 589
112-124	40-409	LG 585
112-142	40-518	LG 589
112-154	40-503	LG 589
112-312	40-316	LG 586
112-356	40-121	LG 584
112-359	40-141	LG 585
112-450	40-807	LG 585
113-064	90-142	LG 368
113-066	90-143	LG 368
113-068	90-144	LG 368
113-070	90-145	LG 368
113-072	90-146	LG 368
113-176	90-620	LG 368
113-178	90-621	LG 368
113-180	90-622	LG 368
113-182	90-619	LG 368
114-074	95-006	LG 397
114-080	91-005	LG 458
114-084	91-003	LG 370
114-130	91-096	LG 389
114-142	93-005	LG 447
114-144	91-184	LG 421
114-146	93-008	LG 510
114-148	93-025	LG 482
114-152	91-180	LG 460
114-154	91-181	LG 495
114-156	93-009	LG 476
114-158	93-010	LG 432
114-160	93-011	LG 557
114-174	91-256	LG 437
114-210	91-502	LG 477
114-212	91-501	LG 413
114-240	96-005	
114-290	91-183	LG 370
114-302	95-036	LG 463
114-304	195-033	LG 400
114-306	195-032	LG 425
114-408	91-547	LG 449
114-420	91-242	LG 371
114-438	91-255	LG 454
114-476	91-291	LG 457
114-532	91-352	LG 482
114-546	91-342	LG 447
114-582	91-389	LG 538
114-586	91-398	LG 488
114-588	91-391	LG 489
114-600	191-392	LG 488
114-602	91-393	LG 485
114-630	91-430	LG 497
114-664	92-011	LG 490
114-722	98-496	LG 515
114-724	98-499	LG 519
114-726	98-037	LG 574
114-732	98-019	LG 516
114-758	98-044	LG 409
114-758	98-493	LG 409
114-765	98-001	LG 517
114-771	98-486	LG 512
114-773	98-487	LG 513
114-784	97-110	LG 525
114-792	97-105	LG 523
114-803	97-107	LG 524
114-805	97-109	LG 525
114-817	97-330	LG 528
114-827	97-105	LG 523
114-860	95-024	LG 465
114-862	95-023	LG 380
114-868	95-011	
114-874	95-014	LG 374
114-876	95-015	LG 400
114-902	91-626	LG 552
114-904	91-620	LG 470
114-906	91-621	LG 563
114-910	91-622	LG 536
114-912	91-623	LG 485
114-916	91-627	LG 482
114-938	91-713	LG 422
114-952	91-761	LG 578
115-004	99-103	LG 551
115-012	99-113	LG 528
115-014	99-112	LG 556
115-016	99-117	LG 556
115-019	99-107	LG 551
115-021	99-121	LG 551
115-092	94-017	LG 441
115-094	94-011	LG 572
115-095	94-021	LG 573
115-101	94-770	LG 569
115-103	94-018	LG 565
115-105	94-026	LG 369
115-107	94-022	LG 565
115-109	94-038	LG 568
115-111	94-039	LG 561
115-152	91-805	LG 560
115-154	91-804	LG 560
115-158	91-806	LG 447
116-004	49-004	LG 622
116-006	49-003	LG 622
116-008	49-006	LG 622
116-009	49-005	LG 622
116-012	53-001	LG 623
116-018	49-008	LG 623
116-027	49-007	LG 622
116-031	49-101	LG 602
116-034	49-693	LG 602
116-037	49-071	LG 602
116-038	49-102	LG 602
116-039	49-989	LG 602
116-051	49-077	LG 628
116-056	49-033	LG 628
116-074	49-038	LG 628
116-095	07-010	LG 764
116-150	49-401	LG 605
116-200	49-301	LG 606
116-220	49-035	LG 629
116-400	49-002	LG 623
116-421	49-201	LG 608
116-423	49-840	LG 609
116-424	49-029	LG 609
116-425	49-978	LG 609
116-440	49-025	LG 629
116-442	49-039	LG 629
116-900	49-812	LG 612
120-042	57-005	LG 677
120-043	57-002	LG 677
120-100	33-207	LG 949
120-485	83-013	LG 817
122-100	07-008	LG 762
122-105	55-211	LG 191
122-250	07-204	LG 778
122-251	07-200	LG 778
122-270	07-009	LG 762
122-275	55-212	LG 209
122-277	55-218	LG 209
122-312	55-226	LG 212
122-350	07-205	LG 779
122-351	55-241	LG 214
122-353	55-240	LG 214
122-357	55-236	LG 213
122-367	55-242	LG 214
122-400	49-801	LG 610
122-401	49-802	LG 610
122-402	49-803	LG 610
122-403	49-804	LG 610
122-404	49-805	LG 609
122-420	49-021	LG 629
122-450	07-207	LG 779
122-451	07-206	LG 776
122-452	07-201	LG 779
122-600	49-829	LG 605
122-800	49-810	LG 612
122-803	49-809	LG 613
122-808	49-814	LG 614
122-809	49-807	LG 611
122-811	49-806	LG 611
123-130	43-540	LG 936
123-134	43-562	LG 936
123-302	43-694	LG 936
123-307	43-699	LG 936
127-001	36-100	LG 750
127-002	36-101	LG 750
127-003	36-102	LG 750
127-004	36-103	LG 750
127-005	36-104	LG 750
128-176	43-075	
128-307	82-306	LG 874
128-311	82-308	LG 874
128-315	48-080	
128-321	48-200	LG 694
128-323	48-205	LG 694
128-340	09-802	LG 233
128-341	09-808	LG 697
128-342	09-801	LG 229
128-344	09-804	LG 233
128-363	48-145	LG 698
128-451	82-305	LG 908
128-492	48-202	LG 694
129-455	46-310	LG 713
129-511	46-300	LG 717
129-651	46-024	LG 719
133-702	76-002	LG 726
133-706	41-005	LG 728
133-708	49-018	LG 728
133-711	51-000	LG 727
133-712	51-222	LG 727
133-750	76-110	LG 726
135-002	02-402	LG 790
135-002	02-407	LG 790
135-503	02-404	LG 790
137-020	07-153	LG 761
137-021	07-151	LG 761
137-022	07-152	LG 761
137-023	07-150	LG 761
137-030	07-016	LG 762
137-050	07-102	LG 774
137-054	07-101	LG 775
137-056	07-103	LG 775
137-057	07-100	LG 774
137-072	02-040	LG 765

2019 Aftermarket X-Reference

PART No.	OREGON	Page
PLP		
137-073	02-041	LG 765
137-080	07-001	LG 765
137-100	02-861	LG 766
137-101	02-860	LG 766
137-102	07-400	LG 767
137-104	07-406	LG 767
137-107	07-408	LG 766
137-109	07-390	LG 766
137-110	07-391	LG 766
137-114	07-392	LG 767
139-003	07-303	LG 770
139-005	07-304	LG 770
139-006	07-307	LG 770
139-042	55-120	LG 770
139-504	07-308	LG 772
139-520	55-106	LG 773
141-013	50-412	LG 745
141-020	50-544	LG 747
141-036	50-027	LG 747
141-040	50-542	LG 747
141-070	49-355	LG 746
141-084	49-111	LG 748
141-097	49-031	LG 746
141-118	49-099	LG 748
141-120	49-109	LG 748
141-140	49-160	LG 747
141-160	49-119	LG 746
141-164	49-127	LG 746
141-165	49-095	LG 746
141-184	50-101	LG 746
141-200	49-110	LG 746
141-204	49-115	LG 746
141-210	49-107	LG 749
141-212	49-112	LG 749
141-214	49-100	LG 749
141-230	49-128	LG 747
141-232	49-131	LG 745
141-247	50-543	LG 748
141-418	50-041	LG 757
141-688	50-502	LG 756
142-001	50-407	LG 758
142-020	50-032	LG 759
142-036	50-548	LG 759
142-038	50-033	LG 759
142-060	49-153	LG 758
142-062	49-411	LG 759
142-070	49-157	LG 759
142-100	49-402	LG 758
142-104	49-150	LG 758
142-116	49-403	LG 758
142-122	49-841	LG 626
142-150	50-204	LG 758
142-156	50-206	LG 758
142-180	49-120	LG 759
142-811	49-331	LG 604
143-015	49-083	LG 913
145-100	86-001	LG 781
145-105	86-009	LG 781
145-301	86-005	LG 782
145-302	86-008	LG 782
145-303	86-010	LG 782
147-020	33-053	LG 789
147-070	33-362	LG 784
147-070	33-363	LG 787
147-071	33-365	LG 784
147-073	33-344	LG 784
147-074	33-342	LG 784
147-076	33-340	LG 784
147-150	33-334	LG 730
147-250	33-389	LG 945
147-331	33-333	LG 786
147-430	33-330	LG 729
147-435	33-240	LG 948
147-450	33-386	LG 942
147-455	33-335	LG 730
147-456	33-396	LG 944
147-551	33-390	
147-553	33-391	LG 945
147-555	33-387	LG 945
147-600	33-186	LG 789
147-800	42-008	LG 945
147-801	42-009	LG 945
147-804	33-201	LG 867
147-806	33-038	LG 742
147-810	33-385	LG 942
151-003	60-065	LG 722
151-020	60-048	LG 722
151-022	60-060	LG 722
151-023	60-092	LG 722
151-030	84-001	LG 675
151-031	84-007	LG 675
151-032	84-004	LG 675
151-033	84-002	LG 675
151-034	84-006	LG 675
151-043	45-634	LG 675
151-084	84-005	LG 675
153-022	73-560	LG 844
153-026	80-036	LG 727
153-027	80-014	LG 727
153-030	80-037	LG 727
153-040	42-550	
153-041	42-551	
153-043	42-552	
157-050	35-007	LG 806
157-051	35-005	LG 806
157-052	35-004	LG 806
157-053	35-002	LG 806
157-055	35-014	LG 806
157-058	35-012	LG 806
157-059	35-010	LG 809
157-064	35-022	LG 807
157-065	35-027	LG 807
157-070	35-001	LG 806
157-073	35-023	LG 806
157-210	35-543	LG 807
157-301	35-008	LG 808
157-302	35-006	LG 808
157-400	35-021	LG 810
157-500	35-016	LG 809
157-700	35-003	LG 809
157-702	35-028	LG 810
157-703	35-015	LG 810
159-012	49-667	LG 750
159-013	45-110	LG 245
159-350	83-028	LG 817
159-360	83-282	LG 817
159-451	83-283	LG 818
159-900	83-300	LG 819
161-052	49-045	LG 749
161-055	49-047	LG 749
161-551	49-050	LG 954
161-552	49-051	LG 954
163-057	36-022	LG 750
163-072	36-001	
163-077	36-005	LG 750
165-001	34-001	LG 821
165-003	34-002	LG 821
165-004	34-005	LG 821
165-005	34-009	LG 821
165-005	34-010	LG 831
165-006	34-012	LG 821
165-007	34-015	LG 821
165-008	34-017	LG 821
165-009	34-018	LG 821
165-010	34-019	LG 821
165-011	34-020	LG 821
165-012	34-022	LG 822
165-013	34-023	LG 822
165-014	34-024	LG 822
165-015	34-006	LG 821
165-100	34-030	LG 821
165-101	34-031	LG 821
165-102	34-033	LG 821
165-103	34-035	LG 821
165-104	34-034	LG 821
165-105	34-037	LG 821
165-106	34-038	LG 821
165-107	34-042	LG 823
165-108	34-043	LG 823
165-126	44-301	LG 840
165-128	44-306	LG 840
165-131	44-310	LG 840
165-133	44-312	LG 840
165-134	44-313	LG 840
165-137	44-316	LG 840
165-138	44-318	LG 840
165-139	44-319	LG 840
165-140	44-321	LG 840
165-141	44-322	LG 840
165-146	44-353	LG 840
165-201	34-810	LG 725
165-210	34-044	LG 821
165-210	78-000	LG 823
165-211	34-013	LG 824
165-211	34-014	LG 831
165-212	34-011	LG 821
165-218	34-007	LG 826
165-223	78-640	LG 835
165-224	78-641	LG 835
165-225	78-643	LG 835
165-226	78-031	LG 826
165-230	34-029	LG 821
165-242	78-646	LG 841
165-290	34-028	LG 821
165-304	44-366	LG 837
165-352	44-323	LG 838
165-353	34-004	LG 832
165-356	44-332	LG 838
165-359	34-824	LG 832
165-360	44-356	LG 839
165-361	44-340	LG 838
165-364	34-822	LG 832
165-450	34-003	LG 821
165-491	78-673	LG 839
165-500	44-347	LG 840
165-512	78-690	LG 840
165-513	78-110	LG 833
165-525	34-008	LG 821
165-900	34-036	LG 821
167-001	32-101	LG 676
167-002	32-103	LG 676
167-003	32-105	LG 676
167-004	32-107	LG 676
167-005	32-108	LG 676
167-006	32-111	LG 676
167-007	32-110	LG 676
167-009	32-112	LG 676
167-010	32-114	LG 676
167-011	32-116	LG 676
167-050	02-188	LG 676
167-051	02-190	LG 676
167-052	02-191	LG 676
167-053	02-192	LG 676
167-054	02-193	LG 676
167-056	02-194	LG 676
167-057	02-195	LG 676
167-058	02-196	LG 676
167-100	02-176	LG 676
167-101	02-177	LG 676
167-102	02-178	LG 676
167-103	02-179	LG 676
167-104	02-181	LG 676
167-106	02-180	LG 676
167-107	02-182	LG 676
167-108	02-184	LG 676
172-002	31-907	LG 929
172-050	80-740	LG 852
172-051	80-741	LG 852
172-052	80-742	LG 852
172-054	80-743	LG 852
172-056	80-746	LG 852
172-059	80-747	LG 852
172-065	73-028	LG 850
172-065	73-100	LG 850
172-067	73-020	LG 850
172-076	73-001	LG 847
172-078	73-003	LG 847
172-083	73-006	LG 846
172-103	73-008	LG 848
172-104	73-013	LG 849
172-105	73-014	LG 849
174-150	33-210	LG 867
174-153	33-208	LG 866
176-040	31-232	LG 937
176-041	31-240	LG 937
176-042	31-242	LG 937
176-043	31-250	LG 937
176-044	31-252	LG 937
176-045	31-260	LG 937
176-107	31-908	LG 929
176-109	31-904	LG 930
176-113	31-100	LG 929
178-100	43-404	LG 928
178-110	43-011	LG 935

X

PLP

PART No.	OREGON	Page
178-111	43-012	LG 927
178-114	33-005	LG 927
178-116	43-014	LG 932
178-120	43-100	LG 932
178-121	43-200	LG 932
178-304	55-800	LG 934
178-630	31-051	LG 924
180-002	02-115	LG 723
180-006	02-107	LG 723
180-008	02-098	LG 722
180-010	02-099	LG 722
180-012	02-108	LG 723
180-018	60-004	LG 701
180-052	74-054	LG 721
180-053	74-072	LG 721
180-071	74-732	LG 721
180-100	60-209	LG 700
180-101	60-860	LG 701
180-102	60-160	LG 701
180-103	60-408	LG 700
180-107	60-400	LG 700
180-127	60-426	LG 699
180-128	60-046	LG 700
180-303	46-323	LG 712
180-349	60-420	LG 717
180-353	60-522	LG 715
180-501	60-353	LG 719
180-503	60-991	LG 718
180-504	60-061	LG 718
180-505	60-188	LG 718
180-509	60-786	LG 719
180-511	60-240	LG 719
184-011	72-804	LG 1047
184-501	71-800	LG 956
184-502	71-816	LG 956
184-503	71-400	LG 956
184-504	71-277	LG 956
184-505	71-600	LG 956
184-506	71-280	LG 956
184-507	71-102	LG 956
184-508	71-104	LG 956
184-509	71-108	LG 957
184-510	71-107	LG 957
184-511	71-105	LG 957
184-512	71-511	LG 956
184-518	71-274	LG 956
184-521	71-106	LG 957
184-522	71-101	LG 956
184-551	71-002	LG 957
184-552	71-001	LG 957
184-901	71-109	LG 956
184-903	71-610	LG 956
184-905	71-250	LG 956
184-908	71-500	
184-909	71-275	LG 956
186-082	42-061	LG 1018
186-143	42-452	LG 867
186-178	42-455	LG 721
190-040	55-252	LG 1019
190-201	55-803	LG 1022
190-289	55-109	LG 773
190-293	55-102	LG 773
190-705	07-011	LG 763
190-900	49-816	LG 612
190-942	07-214	LG 779
190-982	55-822	LG 1027
191-146	49-123	LG 746
192-013	82-220	LG 871
192-015	85-017	LG 907
192-100	82-493	LG 869
192-125	82-514	LG 869
192-160	82-013	LG 891
192-249	84-010	LG 913
192-255	45-114	LG 938
192-256	45-103	LG 938
192-264	76-100	LG 939
192-268	82-500	LG 893
192-301	85-001	LG 908
192-303	85-005	
192-311	48-001	LG 914
192-320	45-104	LG 939
192-328	85-008	LG 909
192-333	82-250	LG 902
192-338	85-012	LG 909
192-353	82-225	LG 871
192-402	82-020	LG 903
192-651	82-677	LG 903
192-653	82-678	LG 904
192-726	05-060	LG 914
192-727	05-061	LG 914
192-728	81-102	LG 805
192-729	81-101	
192-754	80-745	LG 728
192-760	85-011	LG 909
194-050	72-106	LG 1029
194-051	72-107	LG 1029
194-052	72-108	LG 1031
194-100	72-304	LG 1038
194-175	72-306	LG 1038
194-250	72-318	LG 1042
194-500	72-117	LG 1036
196-002	72-420	LG 1047
196-051	72-427	LG 1029
196-052	72-430	LG 1034
196-053	72-437	LG 1030
196-200	72-746	LG 1032
196-201	72-747	LG 1036
196-207	72-745	LG 1033
196-301	72-436	LG 1034
196-302	72-500	LG 1034
196-303	72-508	LG 1034
196-501	72-450	LG 1037
196-504	72-728	LG 1044
196-505	72-442	LG 1037
196-901	72-316	LG 1042
610-345	07-004	LG 769
7-01667	33-518	LG 785
7-01673	33-519	LG 785
7-039956	46-325	LG 701
7-039989	60-015	LG 716
7-04236	82-245	
7-042423	82-243	LG 902
7-044013	92-119	LG 492
7-044019	195-062	LG 376
7-044023	91-395	LG 493
7-044026	97-123	LG 537
7-044027	97-008	LG 526
7-044028	91-368	LG 460
7-044033	91-256	LG 437
7-044034	198-153	LG 520
7-05054	65-204	LG 342
7-05092	85-029	LG 909
7-05093	85-028	LG 908
7-052016	78-006	LG 828
7-052018	78-005	LG 823
7-052043	78-026	LG 822
7-052046	78-011	LG 827
7-05267	85-010	
7-05548	04-015	LG 899
7-06292	33-115	LG 738
7-078067	75-292	LG 281
7-078069	75-231	LG 281
7-078073	75-232	LG 281
7-078074	75-234	LG 281
7-078076	75-967	LG 258
7-078079	75-249	LG 305
7-078086	75-263	LG 304
7-078089	75-283	LG 256
7-078093	75-211	LG 277
7-083032	30-054	LG 200
7-083033	30-068	LG 212
7-083034	30-073	LG 183
7-083037	30-943	LG 206
7-083044	30-056	LG 208
7-083048	30-945	LG 207
7-08548	95-052	LG 398
7-08549	91-138	LG 488
7-08550	91-078	LG 490
7-09800	67-020	LG 965
7-09801	67-012	LG 965
7-09802	67-009	LG 965
7-09803	67-003	LG 965
7-09804	67-010	LG 965
7-09805	67-013	LG 965
7-09806	67-001	LG 965
7-09807	67-005	LG 965
7-09808	67-018	LG 965
7-09809	67-017	LG 965
7-09810	67-002	LG 965
7-09811	67-014	LG 965
7-09812	67-015	LG 965
7-09813	67-011	LG 965
7-09814	67-019	LG 965
7-09816	67-008	LG 965
7-09817	67-004	LG 965
7-09818	67-007	LG 965

PRIME LINE

PART No.	OREGON	Page
7-01024	33-606	LG 789
7-01029	33-628	LG 789
7-01087	33-601	LG 789
7-01090	33-210	LG 867
7-01324	33-008	LG 789
7-01338	33-016	LG 789
7-01603	33-363	LG 787
7-01605	33-365	LG 784
7-01612	33-362	LG 784
7-01634	33-333	LG 786
7-01641	33-340	LG 784
7-01643	33-344	LG 784
7-01684	33-335	LG 730
7-01826	33-320-0	LG 731
7-01850	33-386	LG 942
7-01852	33-385	LG 942
7-01854	33-389	LG 945
7-01859	33-240	LG 948
7-01861	33-330	LG 729
7-01862	42-008	LG 945
7-01891	33-395	LG 943
7-01895	33-392	LG 944
7-01901	33-391	LG 945
7-01906	33-396	LG 944
7-01911	33-384	LG 947
7-019272	33-382	LG 947
7-01959	02-406	LG 790
7-01960	02-402	LG 790
7-01962	02-404	LG 790
7-02000	49-815	LG 626
7-02003	49-300	LG 626
7-02020	49-201	LG 608
7-02024	49-401	LG 605
7-02025	49-078	LG 603
7-02025	49-101	LG 602
7-02043	49-301	LG 606
7-02045	49-102	LG 602
7-02100	49-004	LG 622
7-02101	49-002	LG 623
7-02105	49-005	LG 622
7-02106	49-006	LG 622
7-02109	49-008	LG 623
7-02200	30-070	LG 216
7-02201	30-095	LG 206
7-02202	30-081	LG 205
7-02203	30-082	LG 205
7-02204	30-080	LG 205
7-02208	30-083	LG 219
7-02209	30-205	LG 219
7-02210	30-044	LG 179
7-02213	55-211	LG 191
7-02220	30-091	LG 217
7-02222	30-097	LG 179
7-02223	30-094	LG 180
7-02226	30-093	LG 206
7-02227	30-105	LG 179
7-02228	30-101	LG 179
7-02232	30-100	LG 217
7-02234	30-301	LG 217
7-02235	30-098	LG 206
7-02238	30-400	LG 193
7-02239	30-094	LG 180
7-02240	30-104	LG 180
7-02241	30-106	LG 179
7-02242	30-303	LG 198
7-02245	30-432	
7-02247	30-430	LG 211
7-02249	30-405	LG 193
7-02251	30-421	LG 220
7-02252	30-304	LG 199
7-02253	30-117	LG 219
7-02256	30-111	LG 217
7-02257	30-710	LG 181
7-02261	30-403	LG 192
7-02262	30-404	LG 192

2019 Aftermarket X-Reference

PRIME LINE

PART No.	OREGON	Page
7-02265	30-107	LG 180
7-02266	30-112	LG 218
7-02267	30-305	LG 198
7-02268	30-108	LG 180
7-02272	30-410	LG 220
7-02274	30-412	LG 220
7-02275	30-923	LG 186
7-02277	30-125	LG 206
7-02278	30-920	LG 186
7-02282	30-929	LG 187
7-02283	30-924	LG 186
7-02286	30-927	LG 187
7-02297	30-506	LG 195
7-02300	55-247	LG 214
7-02323	07-103	LG 775
7-02324	07-406	LG 767
7-02350	07-001	LG 765
7-02351	07-400	LG 767
7-02356	07-201	LG 779
7-02357	07-102	LG 774
7-02358	07-206	LG 776
7-02361	07-104	LG 776
7-02363	07-208	LG 779
7-02364	07-209	LG 779
7-02365	07-210	LG 779
7-02366	07-211	LG 779
7-02370	49-034	LG 630
7-02403	50-041	LG 757
7-02406	50-043	LG 757
7-02418	50-027	LG 747
7-02426	50-032	LG 759
7-02444	50-033	LG 759
7-02559	49-402	LG 758
7-02561	49-411	LG 759
7-02602	50-407	LG 758
7-02700	30-134	LG 180
7-02705	30-102	LG 220
7-02708	30-401	LG 193
7-02709	30-406	LG 193
7-02711	30-311	LG 199
7-02712	30-309	LG 199
7-02713	30-085	LG 203
7-02719	30-142	LG 217
7-02721	30-141	LG 217
7-02722	30-414	LG 221
7-02723	30-413	LG 221
7-02724	30-415	
7-02742	30-049	LG 181
7-02753	30-088	LG 203
7-02755	30-025	LG 208
7-02756	30-026	LG 208
7-02788	30-116	LG 219
7-02801	50-101	LG 746
7-02816	50-206	LG 758
7-02817	50-204	LG 758
7-03122	78-649	LG 841
7-03326	02-531	
7-03330	02-535	
7-03418	55-800	LG 934
7-03419	55-820	LG 935
7-03431	43-694	LG 936
7-03437	43-685	LG 936
7-03451	43-404	LG 928
7-03455	43-012	LG 927
7-03456	43-100	LG 932
7-03457	43-200	LG 932
7-03458	43-011	LG 935
7-03472	43-532	LG 936
7-03651	35-001	LG 806
7-03653	35-022	LG 807
7-03655	35-003	LG 809
7-03658	35-012	LG 806
7-03659	35-015	LG 810
7-03662	35-010	LG 809
7-03664	35-005	LG 806
7-03665	35-004	LG 806
7-03666	35-008	LG 808
7-03669	35-002	LG 806
7-03670	35-006	LG 808
7-03670	35-026	LG 807
7-03673	35-014	LG 806
7-03678	35-021	LG 810
7-03679	35-543	LG 807
7-03681	35-016	LG 809
7-03903	60-991	LG 718
7-03904	60-061	LG 718
7-03905	60-209	LG 700
7-03906	60-220	LG 708
7-03914	60-188	LG 718
7-03924	02-107	LG 723
7-03931	74-054	LG 721
7-03932	02-115	LG 723
7-03933	02-098	LG 722
7-03934	02-099	LG 722
7-03951	60-353	LG 719
7-03966	46-302	LG 709
7-03967	46-306	LG 708
7-03970	60-106	LG 701
7-03972	60-408	LG 700
7-03993	60-522	LG 715
7-04099	04-125	LG 694
7-04101	45-088	LG 240
7-04102	45-091	LG 249
7-04105	45-087	LG 243
7-04107	45-082	LG 854
7-04108	45-092	LG 854
7-04109	45-083	LG 246
7-04110	45-081	LG 249
7-04112	45-095	LG 855
7-04143	48-211	LG 233
7-04149	45-078	LG 230
7-04182	72-745	LG 1033
7-04197	45-107	LG 245
7-04203	75-105	LG 319
7-04204	75-073	LG 319
7-04210	44-347	LG 840
7-04212	75-068	LG 318
7-04213	34-001	LG 821
7-04217	44-323	LG 838
7-04220	45-079	LG 249
7-04221	45-098	LG 243
7-04225-	82-493	LG 869
7-04227	82-514	LG 869
7-04228	82-677	LG 903
7-04229	82-243	LG 902
7-04231	45-104	LG 939
7-04232	45-034	LG 224
7-04234	85-001	LG 908
7-04240	82-013	LG 891
7-04250	45-295	LG 232
7-04258	82-244	LG 910
7-04259	82-020	LG 903
7-04265	82-501	LG 894
7-04266	82-500	LG 893
7-04267	82-502	LG 894
7-04272	65-221	LG 341
7-04273	65-220	LG 340
7-04281	46-024	LG 719
7-04288	85-005	
7-04292	45-010	LG 238
7-04295	45-259	LG 224
7-04298	45-205	LG 228
7-04301	72-406	LG 1029
7-04303	72-408	LG 1029
7-04304	72-410	LG 1030
7-043132	73-031	LG 850
7-04326	72-427	LG 1029
7-04327	72-430	LG 1034
7-04329	72-437	LG 1030
7-04330	72-446	LG 1030
7-04346	72-106	LG 1029
7-04347	72-107	LG 1029
7-04348	72-108	LG 1031
7-04349	72-110	LG 1030
7-04377	72-436	LG 1034
7-04378	72-500	LG 1034
7-04379	72-508	LG 1034
7-04380	72-304	LG 1038
7-04381	72-318	LG 1042
7-04385	72-117	LG 1036
7-04387	72-109	LG 1037
7-04392	72-442	LG 1037
7-04409	99-112	LG 556
7-04411	93-008	LG 510
7-04418	91-393	LG 485
7-04421	94-019	LG 570
7-04425	91-761	LG 578
7-04426	91-762	LG 578
7-04427	91-291	LG 457
7-04433	96-005	
7-04435	99-113	LG 528
7-04439	92-011	LG 490
7-04441	40-409	LG 585
7-04444	40-843	LG 588
7-04449	40-807	LG 585
7-0445	40-408	LG 589
7-04454	93-005	LG 447
7-04457	30-400	LG 193
7-04459	65-206	LG 342
7-04468	95-023	LG 380
7-04469	95-014	LG 374
7-04471	94-018	LG 565
7-04472	91-391	LG 489
7-04481	95-052	LG 398
7-04487	91-389	LG 538
7-04498	99-117	LG 556
7-04500	79-724	LG 556
7-04510	91-242	LG 371
7-04511	49-355	LG 746
7-04518	95-045	LG 374
7-04521	93-011	LG 557
7-04524	95-011	
7-04526	91-713	LG 422
7-04533	91-805	LG 560
7-04534	91-167	LG 416
7-04537	91-342	LG 447
7-04539	49-003	LG 622
7-04540	79-728	LG 556
7-04541	98-037	LG 574
7-04542	93-013	LG 480
7-04552	91-430	LG 497
7-04560	94-026	LG 369
7-04563	91-806	LG 447
7-04564	93-005	LG 447
7-04569	91-253	LG 415
7-04570	91-507	LG 415
7-04572	91-509	LG 424
7-04574	91-244	LG 450
7-04576	98-019	LG 516
7-04578	91-515	LG 415
7-04588	94-017	LG 441
7-04589	94-011	LG 572
7-04590	94-021	LG 573
7-04598	91-715	LG 541
7-04599	91-502	LG 477
7-04615	93-006	LG 444
7-04616	93-010	LG 432
7-04621	94-022	LG 565
7-04623	97-105	LG 523
7-04640	90-618	LG 368
7-04641	90-619	LG 368
7-04642	90-620	LG 368
7-04643	90-621	LG 368
7-04644	90-622	LG 368
7-04646	95-024	LG 465
7-04648	191-392	LG 488
7-04649	91-398	LG 488
7-04664	95-015	LG 400
7-04665	97-107	LG 524
7-04672	91-394	LG 489
7-04673	97-110	LG 525
7-04675	97-109	LG 525
7-04680	91-586	LG 485
7-04681	98-499	LG 519
7-04684	94-770	LG 569
7-04688	91-764	LG 579
7-04690	91-352	LG 482
7-04697	97-330	LG 528
7-04698	98-486	LG 512
7-04701	40-121	LG 584
7-04703	40-503	LG 589
7-04704	40-502	LG 586
7-04708	91-327	LG 404
7-04711	91-097	LG 388
7-04712	91-330	LG 513
7-04714	91-096	LG 389
7-04716	95-027	LG 398
7-04717	91-178	LG 471
7-04722	91-093	LG 389
7-04729	91-329	LG 409
7-04736	99-121	LG 551
7-04739	94-127	LG 569
7-04748	91-254	LG 456
7-04749	91-395	LG 493

X

PRIME LINE

PART No.	OREGON	Page
7-04754	40-403	LG 589
7-04758	91-003	LG 370
7-04761	91-003	LG 370
7-04766	91-506	LG 473
7-04768	91-181	LG 495
7-04769	91-188	LG 439
7-04785	98-007	LG 401
7-04793	91-626	LG 552
7-04794	91-621	LG 563
7-04797	195-005	LG 373
7-04801	71-102	LG 956
7-04802	71-800	LG 956
7-04803	71-816	LG 956
7-04804	71-400	LG 956
7-04806	71-104	LG 956
7-04807	71-500	
7-04808	71-600	LG 956
7-04809	71-101	LG 956
7-04821	71-105	LG 957
7-04822	71-511	LG 956
7-04851	72-301	LG 1037
7-04852	72-728	LG 1044
7-04907	49-667	LG 750
7-04916	07-303	LG 770
7-04918	07-308	LG 772
7-049191	45-110	LG 245
7-049263	55-120	LG 770
7-04960	91-622	LG 536
7-04961	91-804	LG 560
7-04965	91-180	LG 460
7-04969	97-105	LG 523
7-04973	95-031	LG 377
7-04975	90-146	LG 368
7-04976	90-144	LG 368
7-04978	99-107	LG 551
7-04979	91-620	LG 470
7-04980	95-034	LG 377
7-04982	195-032	LG 425
7-04983	195-033	LG 400
7-04984	91-714	LG 543
7-04986	91-703	LG 541
7-04995	91-005	LG 458
7-04996	93-009	LG 476
7-04998	40-411	LG 589
7-05001	33-186	LG 789
7-05025	85-011	LG 909
7-05050	65-208	LG 342
7-05097	31-907	LG 929
7-05098	85-008	LG 909
7-05099	85-012	LG 909
7-05202	34-002	LG 821
7-05203	34-005	LG 821
7-05204	34-006	LG 821
7-05205	34-009	LG 821
7-05206	34-012	LG 821
7-05207	34-015	LG 821
7-05208	34-017	LG 821
7-05209	34-018	LG 821
7-05210	34-019	LG 821
7-05211	34-020	LG 821
7-05212	34-030	LG 821
7-05213	34-031	LG 821
7-05214	34-033	LG 821
7-05215	34-034	LG 821
7-05216	34-035	LG 821
7-05217	34-037	LG 821
7-05218	34-038	LG 821
7-05220	34-810	LG 725
7-05253	34-820	LG 833
7-05291	48-148	LG 695
7-05292	51-013	LG 725
7-05305	34-024	LG 822
7-05306	34-023	LG 822
7-05308	44-332	LG 838
7-05310	34-042	LG 823
7-05315	78-673	LG 839
7-05317	78-641	LG 835
7-05319	78-643	LG 835
7-05320	78-650	LG 835
7-05321	78-651	LG 835
7-05325	78-644	LG 835
7-05327	78-646	LG 841
7-05335	78-678	LG 835
7-05338	34-826	LG 833
7-05340	34-822	LG 832
7-05341	34-824	LG 832
7-05342	34-022	LG 822
7-05343	78-050	LG 831
7-05344	34-004	LG 832
7-05352	48-001	LG 914
7-05355	05-061	LG 914
7-05361	84-010	LG 913
7-05363	05-060	LG 914
7-05383	44-368	LG 837
7-05431	34-014	LG 831
7-05438	44-340	LG 838
7-05456	34-028	LG 821
7-05489	44-500	LG 840
7-05561	56-002	LG 687
7-05671	86-005	LG 782
7-05807	40-402	LG 589
7-05808	40-411	LG 589
7-05809	40-514	LG 589
7-05814	40-140	LG 584
7-05816	40-403	LG 589
7-05820	40-316	LG 586
7-05822	40-140	LG 584
7-05935	42-455	LG 721
7-05978	42-452	LG 867
7-06002	84-004	LG 675
7-06003	84-001	LG 675
7-06010	45-634	LG 675
7-06012	84-005	LG 675
7-06014	84-002	LG 675
7-06016	84-006	LG 675
7-06049	48-043	
7-06057	72-747	LG 1036
7-06058	72-746	LG 1032
7-06059	76-100	LG 939
7-06079	45-301	LG 804
7-06080	45-305	LG 804
7-06081	45-302	LG 804
7-06082	45-306	LG 804
7-06340	91-508	LG 419
7-06341	91-218	LG 420
7-06342	91-368	LG 460
7-06375	91-403	LG 488
7-06376	91-383	LG 484
7-06377	91-384	LG 487
7-06378	91-380	LG 538
7-06385	91-433	LG 498
7-06386	91-438	LG 500
7-06397	98-496	LG 515
7-06398	98-537	LG 516
7-06403	98-050	LG 521
7-06444	94-039	LG 561
7-06445	94-038	LG 568
7-06466	91-146	LG 419
7-06476	91-217	LG 558
7-06477	91-335	LG 420
7-06478	91-259	LG 432
7-06481	91-373	LG 383
7-06482	91-369	LG 434
7-06493	91-544	LG 397
7-06702	91-399	LG 493
7-06704	91-400	LG 488
7-06707	91-436	LG 498
7-06709	198-052	LG 389
7-06711	198-049	LG 518
7-06721	97-017	LG 537
7-06728	99-103	LG 551
7-06741	91-503	LG 424
7-06747	91-766	LG 579
7-06753	91-505	LG 477
7-06754	91-266	LG 431
7-06756	91-071	LG 393
7-06931	195-003	LG 400
7-07048	49-829	LG 605
7-07064	07-010	LG 764
7-07067	07-213	LG 777
7-07100	07-204	LG 778
7-07102	07-205	LG 779
7-07103	07-101	LG 775
7-07104	07-100	LG 774
7-0712	49-804	LG 610
7-07121	49-802	LG 610
7-07122	49-801	LG 610
7-07123	49-810	LG 612
7-07125	49-807	LG 611
7-07129	49-809	LG 613
7-07130	49-800	LG 610
7-07131	49-805	LG 609
7-07139	49-814	LG 614
7-07143	49-021	LG 629
7-07144	49-806	LG 611
7-07147	49-834	LG 611
7-07160	55-212	LG 209
7-07164	49-803	LG 610
7-07175	30-925	LG 187
7-07176	07-207	LG 779
7-07181	49-816	LG 612
7-07183	30-318	LG 193
7-07184	49-833	LG 611
7-07195	30-419	LG 221
7-07436	48-200	LG 694
7-07455	51-000	LG 727
7-07456	45-100	LG 239
7-07460	07-004	LG 769
7-07461	07-392	LG 767
7-07485	82-320	LG 874
7-07876	75-043	LG 312
7-07877	75-260	LG 312
7-07922	75-031	LG 278
7-07923	75-552	LG 334
7-07925	75-114	LG 281
7-07926	75-072	LG 268
7-07927	75-212	LG 268
7-07929	75-108	LG 289
7-07930	75-494	LG 335
7-07932	75-488	LG 335
7-07934	75-403	LG 256
7-07935	75-055	LG 255
7-07936	75-097	LG 289
7-07937	75-195	LG 254
7-07938	75-169	LG 290
7-07939	75-196	LG 290
7-07940	75-164	LG 262
7-07948	75-178	LG 281
7-07949	75-008	LG 301
7-07950	75-012	LG 301
7-07953	75-018	LG 301
7-07955	75-025	LG 253
7-07956	75-027	LG 302
7-07957	75-159	LG 303
7-07958	75-161	LG 255
7-07959	75-160	LG 303
7-07964	75-022	LG 307
7-07965	75-103	LG 308
7-07966	75-042	LG 308
7-07969	75-129	LG 255
7-07970	75-210	LG 309
7-07975	75-205	LG 322
7-07982	75-197	LG 262
7-07990	75-130	LG 269
7-08122	73-022	LG 847
7-08125	73-018	LG 849
7-08251	48-145	LG 698
7-08306	30-709	LG 194
7-08315	30-317	LG 194
7-08318	30-423	LG 221
7-08319	30-418	LG 221
7-08325	30-031	LG 218
7-08329	30-027	LG 194
7-08332	30-029	LG 181
7-08351	30-015	LG 194
7-08355	30-018	LG 198
7-08362	30-023	LG 205
7-08375	30-416	LG 214
7-08377	55-243	LG 215
7-08378	55-248	LG 215
7-08379	55-244	LG 215
7-08380	55-245	LG 215
7-08383	30-710	LG 181
7-08414	45-043	LG 243
7-08419	45-113	LG 242
7-08522	96-630	LG 556
7-08529	94-618	LG 506
7-08700	70-302	LG 959
7-08707	70-301	LG 959
7-08709	70-307	LG 960
7-08710	70-311	LG 960
7-08712	70-316	LG 959
7-08716	70-343	LG 958
7-08720	70-368	LG 961

2019 Aftermarket X-Reference

PRIME LINE

PART No.	OREGON	Page
7-08750	71-109	LG 956
7-08752	71-276	LG 956
7-08753	71-610	LG 956
7-08754	71-250	LG 956
7-08757	71-408	LG 957
7-08759	71-107	LG 957
7-08760	71-108	LG 957
7-3H240	75-324	LG 334
7-3H250	75-325	LG 334
7-3H270	75-327	LG 334
7-3H280	75-328	LG 334
7-3H290	75-329	LG 334
7-3H300	75-330	LG 334
7-3H310	75-331	LG 334
7-3H330	75-333	LG 334
7-3H340	75-334	LG 334
7-3H360	75-336	LG 334
7-3H370	75-337	LG 334
7-3H380	75-338	LG 334
7-3H390	75-339	LG 334
7-3H400	75-340	LG 334
7-3H410	75-341	LG 334
7-3H420	75-342	LG 334
7-3H430	75-343	LG 334
7-3H440	75-344	LG 334
7-3H450	75-345	LG 334
7-3H460	75-346	LG 334
7-3H480	75-348	LG 334
7-3H490	75-349	LG 334
7-3H500	75-350	LG 334
7-4H1000	75-400	LG 335
7-4H1020	75-402	LG 335
7-4H1140	75-414	LG 335
7-4H230	75-423	LG 334
7-4H240	75-424	LG 334
7-4H250	75-425	LG 334
7-4H260	75-426	LG 334
7-4H270	75-427	LG 334
7-4H280	75-428	LG 334
7-4H290	75-429	LG 334
7-4H310	75-431	LG 334
7-4H320	75-432	LG 334
7-4H330	75-433	LG 334
7-4H340	75-434	LG 334
7-4H350	75-435	LG 334
7-4H360	75-436	LG 334
7-4H370	75-437	LG 334
7-4H380	75-438	LG 334
7-4H390	75-439	LG 334
7-4H400	75-440	LG 334
7-4H410	75-441	LG 334
7-4H420	75-442	LG 334
7-4H430	75-443	LG 334
7-4H450	75-445	LG 334
7-4H460	75-446	LG 334
7-4H470	75-447	LG 334
7-4H4801	75-448	LG 334
7-4H490	75-449	LG 334
7-4H500	75-450	LG 334
7-4H510	75-451	LG 334
7-4H520	75-452	LG 334
7-4H530	75-453	LG 334
7-4H540	75-454	LG 334
7-4H550	75-455	LG 334
7-4H560	75-456	LG 334
7-4H570	75-457	LG 334
7-4H580	75-458	LG 334
7-4H590	75-459	LG 334
7-4H600	75-460	LG 334
7-4H610	75-461	LG 334
7-4H620	75-462	LG 334
7-4H630	75-463	LG 334
7-4H640	75-464	LG 334
7-4H650	75-465	LG 334
7-4H660	75-466	LG 334
7-4H670	75-467	LG 334
7-4H680	75-468	LG 334
7-4H690	75-469	LG 335
7-4H700	75-470	LG 335
7-4H710	75-471	LG 335
7-4H720	75-472	LG 335
7-4H730	75-473	LG 335
7-4H740	75-474	LG 335
7-4H750	75-475	LG 335
7-4H760	75-476	LG 335
7-4H770	75-477	LG 335
7-4H780	75-478	LG 335
7-4H790	75-479	LG 335
7-4H800	75-480	LG 335
7-4H810	75-481	LG 335
7-4H820	75-482	LG 335
7-4H830	75-483	LG 335
7-4H840	75-484	LG 335
7-4H850	75-485	LG 335
7-4H860	75-486	LG 335
7-4H870	75-487	LG 335
7-4H890	75-489	LG 335
7-4H900	75-490	LG 335
7-4H910	75-491	LG 335
7-4H920	75-492	LG 335
7-4H930	75-493	LG 335
7-4H950	75-495	LG 335
7-4H960	75-496	LG 335
7-4H970	75-497	LG 335
7-4H980	75-498	LG 335
7-4H990	75-499	LG 335
7-5H1000	75-500	LG 335
7-5H270	75-527	LG 334
7-5H290	75-529	LG 334
7-5H300	75-530	LG 334
7-5H310	75-531	LG 334
7-5H320	75-532	LG 334
7-5H330	75-533	LG 334
7-5H340	75-534	LG 334
7-5H350	75-535	LG 334
7-5H360	75-536	LG 334
7-5H370	75-537	LG 334
7-5H380	75-538	LG 334
7-5H390	75-539	LG 334
7-5H400	75-540	LG 334
7-5H410	75-541	LG 334
7-5H420	75-542	LG 334
7-5H430	75-543	LG 334
7-5H440	75-544	LG 334
7-5H450	75-545	LG 334
7-5H460	75-546	LG 334
7-5H470	75-547	LG 334
7-5H480	75-548	LG 334
7-5H490	75-549	LG 334
7-5H500	75-550	LG 334
7-5H510	75-551	LG 334
7-5H530	75-553	LG 334
7-5H540	75-554	LG 334
7-5H550	75-555	LG 334
7-5H560	75-556	LG 334
7-5H570	75-557	LG 334
7-5H580	75-558	LG 253
7-5H590	75-559	LG 334
7-5H600	75-560	LG 334
7-5H610	75-561	LG 334
7-5H620	75-562	LG 334
7-5H630	75-563	LG 253
7-5H640	75-564	LG 334
7-5H650	75-565	LG 253
7-5H660	75-566	LG 334
7-5H670	75-567	LG 334
7-5H680	75-568	LG 334
7-5H690	75-569	LG 335
7-5H700	75-570	LG 335
7-5H710	75-571	LG 335
7-5H720	75-572	LG 335
7-5H730	75-573	LG 335
7-5H740	75-574	LG 335
7-5H750	75-575	LG 335
7-5H760	75-576	LG 335
7-5H770	75-577	LG 335
7-5H780	75-578	LG 335
7-5H790	75-579	LG 335
7-5H800	75-580	LG 335
7-5H810	75-581	LG 335
7-5H820	75-582	LG 254
7-5H830	75-583	LG 335
7-5H840	75-584	LG 335
7-5H850	75-585	LG 335
7-5H860	75-586	LG 335
7-5H870	75-587	LG 335
7-5H880	75-588	LG 335
7-5H890	75-589	LG 335
7-5H900	75-590	LG 335
7-5H910	75-591	LG 335
7-5H920	75-592	LG 335
7-5H930	75-593	LG 335
7-5H940	75-594	LG 335
7-5H950	75-595	LG 335
7-5H960	75-596	LG 335
7-5H970	75-597	LG 335
7-5H990	75-599	LG 335

PRIME LINE (SIERRA)

PART No.	OREGON	Page
7-01024	33-606	LG 789
7-01029	33-628	LG 789
7-01087	33-601	LG 789
7-01090	33-210	LG 867
7-01324	33-008	LG 789
7-01338	33-016	LG 789
7-01603	33-363	LG 787
7-01605	33-365	LG 784
7-01612	33-362	LG 784
7-01634	33-333	LG 786
7-01850	33-386	LG 942
7-01852	33-385	LG 942
7-01854	33-389	LG 945
7-01859	33-240	LG 948
7-01861	33-330	LG 729
7-01862	42-008	LG 945
7-01891	33-395	LG 943
7-01895	33-392	LG 944
7-01901	33-391	LG 945
7-01902	33-390	
7-01906	33-396	LG 944
7-01911	33-384	LG 947
7-019272	33-382	LG 947
7-01959	02-406	LG 790
7-01960	02-402	LG 790
7-01962	02-404	LG 790
7-02000	49-815	LG 626
7-02003	49-300	LG 626
7-02020	49-201	LG 608
7-02024	49-401	LG 605
7-02025	49-101	LG 602
7-02043	49-301	LG 606
7-02045	49-102	LG 602
7-02100	49-004	LG 622
7-02101	49-002	LG 623
7-02105	49-005	LG 622
7-02106	49-006	LG 622
7-02109	49-008	LG 623
7-02200	30-070	LG 216
7-02201	30-095	LG 206
7-02202	30-081	LG 205
7-02203	30-082	LG 205
7-02204	30-080	LG 205
7-02208	30-083	LG 219
7-02209	30-205	LG 219
7-02210	30-044	LG 179
7-02213	55-211	LG 191
7-02220	30-091	LG 217
7-02222	30-097	LG 179
7-02223	30-094	LG 180
7-02226	30-093	LG 206
7-02227	30-105	LG 179
7-02232	30-100	LG 217
7-02234	30-301	LG 217
7-02235	30-098	LG 206
7-02240	30-104	LG 180
7-02241	30-106	LG 179
7-02242	30-303	LG 198
7-02245	30-432	
7-02247	30-430	LG 211
7-02249	30-405	LG 193
7-02251	30-421	LG 220
7-02252	30-304	LG 199
7-02253	30-117	LG 219
7-02256	30-111	LG 217
7-02261	30-403	LG 192
7-02262	30-404	LG 192
7-02265	30-107	LG 180
7-02266	30-112	LG 218
7-02267	30-305	LG 198
7-02268	30-108	LG 180
7-02272	30-410	LG 220
7-02274	30-412	LG 220
7-02277	30-125	LG 206

PRIME LINE (SIERRA)

PART No.	OREGON	Page
7-02297	30-506	LG 195
7-02300	55-247	LG 214
7-02323	07-103	LG 775
7-02324	07-406	LG 767
7-02350	07-001	LG 765
7-02351	07-400	LG 767
7-02356	07-201	LG 779
7-02357	07-102	LG 774
7-02358	07-206	LG 776
7-02361	07-104	LG 776
7-02363	07-208	LG 779
7-02364	07-209	LG 779
7-02365	07-210	LG 779
7-02366	07-211	LG 779
7-02370	49-034	LG 630
7-02403	50-041	LG 757
7-02406	50-043	LG 757
7-02418	50-027	LG 747
7-02426	50-032	LG 759
7-02444	50-033	LG 759
7-02559	49-402	LG 758
7-02561	49-411	LG 759
7-02602	50-407	LG 758
7-02700	30-134	LG 180
7-02705	30-102	LG 220
7-02708	30-401	LG 193
7-02709	30-406	LG 193
7-02711	30-311	LG 199
7-02712	30-309	LG 199
7-02713	30-085	LG 203
7-02719	30-142	LG 217
7-02721	30-141	LG 217
7-02722	30-414	LG 221
7-02723	30-413	LG 221
7-02724	30-415	
7-02753	30-088	LG 203
7-02755	30-025	LG 208
7-02756	30-026	LG 208
7-02788	30-116	LG 219
7-02801	50-101	LG 746
7-02816	50-206	LG 758
7-02817	50-204	LG 758
7-03122	78-649	LG 841
7-03326	02-531	
7-03330	02-535	
7-03418	55-800	LG 934
7-03419	55-820	LG 935
7-03431	43-694	LG 936
7-03437	43-685	LG 936
7-03451	43-404	LG 928
7-03455	43-012	LG 927
7-03456	43-100	LG 932
7-03457	43-200	LG 932
7-03458	43-011	LG 935
7-03472	43-532	LG 936
7-03651	35-001	LG 806
7-03653	35-022	LG 807
7-03655	35-003	LG 809
7-03658	35-012	LG 806
7-03659	35-015	LG 810
7-03662	35-010	LG 809
7-03664	35-005	LG 806
7-03665	35-004	LG 806
7-03666	35-008	LG 808
7-03669	35-002	LG 806
7-03670	35-006	LG 808
7-03673	35-014	LG 806
7-03678	35-021	LG 810
7-03679	35-543	LG 807
7-03681	35-016	LG 809
7-03903	60-991	LG 718
7-03904	60-061	LG 718
7-03905	60-209	LG 700
7-03906	60-220	LG 708
7-03914	60-188	LG 718
7-03924	02-107	LG 723
7-03931	74-054	LG 721
7-03932	02-115	LG 723
7-03933	02-098	LG 722
7-03934	02-099	LG 722
7-03951	60-353	LG 719
7-03966	46-302	LG 709
7-03967	46-306	LG 708
7-03970	60-106	LG 701
7-03972	60-408	LG 700
7-03993	60-522	LG 715
7-04099	04-125	LG 694
7-04101	45-088	LG 240
7-04102	45-091	LG 249
7-04105	45-087	LG 243
7-04107	45-082	LG 854
7-04108	45-092	LG 854
7-04109	45-083	LG 246
7-04110	45-081	LG 249
7-04112	45-095	LG 855
7-04143	48-211	LG 233
7-04149	45-078	LG 230
7-04182	72-745	LG 1033
7-04197	45-107	LG 245
7-04203	75-105	LG 319
7-04204	75-073	LG 319
7-04210	44-347	LG 840
7-04212	75-068	LG 318
7-04213	34-001	LG 821
7-04217	44-323	LG 838
7-04220	45-079	LG 249
7-04221	45-098	LG 243
7-04225-	82-493	LG 869
7-04227	82-514	LG 869
7-04228	82-677	LG 903
7-04229	82-243	LG 902
7-04231	45-104	LG 939
7-04232	45-034	LG 224
7-04234	85-001	LG 908
7-04240	82-013	LG 891
7-04250	45-295	LG 232
7-04258	82-244	LG 910
7-04259	82-020	LG 903
7-04265	82-501	LG 894
7-04266	82-500	LG 893
7-04267	82-502	LG 894
7-04272	65-221	LG 341
7-04273	65-220	LG 340
7-04281	46-024	LG 719
7-04288	85-005	
7-04292	45-010	LG 238
7-04295	45-259	LG 224
7-04298	45-205	LG 228
7-04301	72-406	LG 1029
7-04303	72-408	LG 1029
7-04304	72-410	LG 1030
7-043132	73-031	LG 850
7-04326	72-427	LG 1029
7-04327	72-430	LG 1034
7-04329	72-437	LG 1030
7-04330	72-446	LG 1030
7-04346	72-106	LG 1029
7-04347	72-107	LG 1029
7-04348	72-108	LG 1031
7-04349	72-110	LG 1030
7-04377	72-436	LG 1034
7-04378	72-500	LG 1034
7-04379	72-508	LG 1034
7-04380	72-304	LG 1038
7-04381	72-318	LG 1042
7-04385	72-117	LG 1036
7-04387	72-109	LG 1037
7-04392	72-442	LG 1037
7-04409	99-112	LG 556
7-04411	93-008	LG 510
7-04418	91-393	LG 485
7-04421	94-019	LG 570
7-04425	91-761	LG 578
7-04426	91-762	LG 578
7-04427	91-291	LG 457
7-04433	96-005	
7-04435	99-113	LG 528
7-04439	92-011	LG 490
7-04441	40-409	LG 585
7-04444	40-843	LG 588
7-04449	40-807	LG 585
7-0445	40-408	LG 589
7-04454	93-005	LG 447
7-04457	30-400	LG 193
7-04459	65-206	LG 342
7-04468	95-023	LG 380
7-04469	95-014	LG 374
7-04471	94-018	LG 565
7-04472	91-391	LG 489
7-04481	95-052	LG 398
7-04487	91-389	LG 538
7-04498	99-117	LG 556
7-04500	79-724	LG 556
7-04510	91-242	LG 371
7-04511	49-355	LG 746
7-04518	95-045	LG 374
7-04521	93-011	LG 557
7-04524	95-011	
7-04526	91-713	LG 422
7-04533	91-805	LG 560
7-04534	91-167	LG 416
7-04537	91-342	LG 447
7-04539	49-003	LG 622
7-04540	79-728	LG 556
7-04541	98-037	LG 574
7-04542	93-013	LG 480
7-04552	91-430	LG 497
7-04560	94-026	LG 369
7-04563	91-806	LG 447
7-04564	93-005	LG 447
7-04569	91-253	LG 415
7-04570	91-507	LG 415
7-04572	91-509	LG 424
7-04574	91-244	LG 450
7-04576	98-019	LG 516
7-04578	91-515	LG 415
7-04588	94-017	LG 441
7-04589	94-011	LG 572
7-04590	94-021	LG 573
7-04598	91-715	LG 541
7-04599	91-502	LG 477
7-04615	93-006	LG 444
7-04616	93-010	LG 432
7-04621	94-022	LG 565
7-04623	97-105	LG 523
7-04640	90-618	LG 368
7-04641	90-619	LG 368
7-04642	90-620	LG 368
7-04643	90-621	LG 368
7-04644	90-622	LG 368
7-04646	95-024	LG 465
7-04648	191-392	LG 488
7-04649	91-398	LG 488
7-04664	95-015	LG 400
7-04665	97-107	LG 524
7-04672	91-394	LG 489
7-04673	97-110	LG 525
7-04675	97-109	LG 525
7-04680	91-586	LG 485
7-04681	98-499	LG 519
7-04684	94-770	LG 569
7-04688	91-764	LG 579
7-04690	91-352	LG 482
7-04697	97-330	LG 528
7-04698	98-486	LG 512
7-04701	40-121	LG 584
7-04703	40-503	LG 589
7-04704	40-502	LG 586
7-04708	91-327	LG 404
7-04711	91-097	LG 388
7-04712	91-330	LG 513
7-04714	91-096	LG 389
7-04716	95-027	LG 398
7-04717	91-178	LG 471
7-04722	91-093	LG 389
7-04729	91-329	LG 409
7-04736	99-121	LG 551
7-04739	94-127	LG 569
7-04748	91-254	LG 456
7-04749	91-395	LG 493
7-04754	40-403	LG 589
7-04758	91-003	LG 370
7-04761	91-003	LG 370
7-04766	91-506	LG 473
7-04768	91-181	LG 495
7-04769	91-188	LG 439
7-04785	98-007	LG 401
7-04793	91-626	LG 552
7-04794	91-621	LG 563
7-04797	195-005	LG 373
7-04801	71-102	LG 956
7-04802	71-800	LG 956
7-04803	71-816	LG 956
7-04804	71-400	LG 956

2019 Aftermarket X-Reference

PRIME LINE (SIERRA)

PART No.	OREGON	Page
7-04806	71-104	LG 956
7-04807	71-500	
7-04808	71-600	LG 956
7-04809	71-101	LG 956
7-04821	71-105	LG 957
7-04822	71-511	LG 956
7-04851	72-301	LG 1037
7-04852	72-728	LG 1044
7-04907	49-667	LG 750
7-04916	07-303	LG 770
7-04918	07-308	LG 772
7-049191	45-110	LG 245
7-049263	55-120	LG 770
7-04960	91-622	LG 536
7-04961	91-804	LG 560
7-04965	91-180	LG 460
7-04969	97-105	LG 523
7-04973	95-031	LG 377
7-04975	90-146	LG 368
7-04976	90-144	LG 368
7-04978	99-107	LG 551
7-04979	91-620	LG 470
7-04980	95-034	LG 377
7-04982	195-032	LG 425
7-04983	195-033	LG 400
7-04984	91-714	LG 543
7-04986	91-703	LG 541
7-04995	91-005	LG 458
7-04996	93-009	LG 476
7-04998	40-411	LG 589
7-05001	33-186	LG 789
7-05025	85-011	LG 909
7-05050	65-208	LG 342
7-05097	31-907	LG 929
7-05098	85-008	LG 909
7-05099	85-012	LG 909
7-05202	34-002	LG 821
7-05203	34-005	LG 821
7-05204	34-006	LG 821
7-05205	34-009	LG 821
7-05206	34-012	LG 821
7-05207	34-015	LG 821
7-05208	34-017	LG 821
7-05209	34-018	LG 821
7-05210	34-019	LG 821
7-05211	34-020	LG 821
7-05212	34-030	LG 821
7-05213	34-031	LG 821
7-05214	34-033	LG 821
7-05215	34-034	LG 821
7-05216	34-035	LG 821
7-05217	34-037	LG 821
7-05218	34-038	LG 821
7-05220	34-810	LG 725
7-05253	34-820	LG 833
7-05291	48-148	LG 695
7-05292	51-013	LG 725
7-05305	34-024	LG 822
7-05306	34-023	LG 822
7-05308	44-332	LG 838
7-05310	34-042	LG 823
7-05315	78-673	LG 839
7-05317	78-641	LG 835
7-05319	78-643	LG 835
7-05320	78-650	LG 835
7-05321	78-651	LG 835
7-05325	78-644	LG 835
7-05327	78-646	LG 841
7-05335	78-678	LG 835
7-05338	34-826	LG 833
7-05340	34-822	LG 832
7-05341	34-824	LG 832
7-05342	34-022	LG 822
7-05343	78-050	LG 831
7-05344	34-004	LG 832
7-05352	48-001	LG 914
7-05355	05-061	LG 914
7-05361	84-010	LG 913
7-05363	05-060	LG 914
7-05383	44-368	LG 837
7-05431	34-014	LG 831
7-05438	44-340	LG 838
7-05456	34-028	LG 821
7-05489	44-500	LG 840
7-05561	56-002	LG 687
7-05671	86-005	LG 782
7-05807	40-402	LG 589
7-05808	40-411	LG 589
7-05809	40-514	LG 589
7-05814	40-140	LG 584
7-05816	40-403	LG 589
7-05820	40-316	LG 586
7-05822	40-140	LG 584
7-05935	42-455	LG 721
7-05978	42-452	LG 867
7-06002	84-004	LG 675
7-06003	84-001	LG 675
7-06010	45-634	LG 675
7-06012	84-005	LG 675
7-06014	84-002	LG 675
7-06016	84-006	LG 675
7-06049	48-043	
7-06057	72-747	LG 1036
7-06058	72-746	LG 1032
7-06059	76-100	LG 939
7-06079	45-301	LG 804
7-06080	45-305	LG 804
7-06081	45-302	LG 804
7-06082	45-306	LG 804
7-06340	91-508	LG 419
7-06341	91-218	LG 420
7-06342	91-368	LG 460
7-06375	91-403	LG 488
7-06376	91-383	LG 484
7-06377	91-384	LG 487
7-06378	91-380	LG 538
7-06385	91-433	LG 498
7-06386	91-438	LG 500
7-06397	98-496	LG 515
7-06398	98-537	LG 516
7-06403	98-050	LG 521
7-06444	94-039	LG 561
7-06445	94-038	LG 568
7-06466	91-146	LG 419
7-06476	91-217	LG 558
7-06477	91-335	LG 420
7-06478	91-259	LG 432
7-06481	91-373	LG 383
7-06482	91-369	LG 434
7-06493	91-544	LG 397
7-06702	91-399	LG 493
7-06704	91-400	LG 488
7-06707	91-436	LG 498
7-06709	198-052	LG 389
7-06711	198-049	LG 518
7-06721	97-017	LG 537
7-06728	99-103	LG 551
7-06741	91-503	LG 424
7-06747	91-766	LG 579
7-06753	91-505	LG 477
7-06754	91-266	LG 431
7-06756	91-071	LG 393
7-06931	195-003	LG 400
7-07048	49-829	LG 605
7-07064	07-010	LG 764
7-07067	07-213	LG 777
7-07100	07-204	LG 778
7-07102	07-205	LG 779
7-07103	07-101	LG 775
7-07104	07-100	LG 774
7-0712	49-804	LG 610
7-07121	49-802	LG 610
7-07122	49-801	LG 610
7-07123	49-810	LG 612
7-07125	49-807	LG 611
7-07129	49-809	LG 613
7-07130	49-800	LG 610
7-07131	49-805	LG 609
7-07139	49-814	LG 614
7-07143	49-021	LG 629
7-07144	49-806	LG 611
7-07147	49-834	LG 611
7-07160	55-212	LG 209
7-07164	49-803	LG 610
7-07176	07-207	LG 779
7-07181	49-816	LG 612
7-07184	49-833	LG 611
7-07195	30-419	LG 221
7-07436	48-200	LG 694
7-07455	51-000	LG 727
7-07456	45-100	LG 239
7-07460	07-004	LG 769
7-07461	07-392	LG 767
7-07485	82-320	LG 874
7-07876	75-043	LG 312
7-07877	75-260	LG 312
7-07922	75-031	LG 278
7-07923	75-552	LG 334
7-07925	75-114	LG 281
7-07926	75-072	LG 268
7-07927	75-212	LG 268
7-07929	75-108	LG 289
7-07930	75-494	LG 335
7-07932	75-488	LG 335
7-07934	75-403	LG 256
7-07935	75-055	LG 255
7-07936	75-097	LG 289
7-07937	75-195	LG 254
7-07938	75-169	LG 290
7-07939	75-196	LG 290
7-07940	75-164	LG 262
7-07948	75-178	LG 281
7-07949	75-008	LG 301
7-07950	75-012	LG 301
7-07953	75-018	LG 301
7-07955	75-025	LG 253
7-07956	75-027	LG 302
7-07957	75-159	LG 303
7-07958	75-161	LG 255
7-07959	75-160	LG 303
7-07964	75-022	LG 307
7-07965	75-103	LG 308
7-07966	75-042	LG 308
7-07969	75-129	LG 255
7-07970	75-210	LG 309
7-07975	75-205	LG 322
7-07982	75-197	LG 262
7-07990	75-130	LG 269
7-08122	73-022	LG 847
7-08125	73-018	LG 849
7-08251	48-145	LG 698
7-08315	30-317	LG 194
7-08318	30-423	LG 221
7-08319	30-418	LG 221
7-08325	30-031	LG 218
7-08329	30-027	LG 194
7-08332	30-029	LG 181
7-08351	30-015	LG 194
7-08355	30-018	LG 198
7-08362	30-023	LG 205
7-08375	30-416	LG 214
7-08377	55-243	LG 215
7-08378	55-248	LG 215
7-08379	55-244	LG 215
7-08380	55-245	LG 215
7-08383	30-710	LG 181
7-08414	45-043	LG 243
7-08419	45-113	LG 242
7-08522	96-630	LG 556
7-08529	94-618	LG 506
7-08700	70-302	LG 959
7-08707	70-301	LG 959
7-08709	70-307	LG 960
7-08710	70-311	LG 960
7-08712	70-316	LG 959
7-08716	70-343	LG 958
7-08720	70-368	LG 961
7-08750	71-109	LG 956
7-08752	71-276	LG 956
7-08753	71-610	LG 956
7-08754	71-250	LG 956
7-08757	71-408	LG 957
7-08759	71-107	LG 957
7-08760	71-108	LG 957
7-3H240	75-324	LG 334
7-3H250	75-325	LG 334
7-3H270	75-327	LG 334
7-3H280	75-328	LG 334
7-3H290	75-329	LG 334
7-3H300	75-330	LG 334
7-3H310	75-331	LG 334
7-3H330	75-333	LG 334
7-3H340	75-334	LG 334
7-3H360	75-336	LG 334

X

PRIME LINE (SIERRA)

PART No.	OREGON	Page
7-3H370	75-337	LG 334
7-3H380	75-338	LG 334
7-3H390	75-339	LG 334
7-3H400	75-340	LG 334
7-3H410	75-341	LG 334
7-3H420	75-342	LG 334
7-3H430	75-343	LG 334
7-3H440	75-344	LG 334
7-3H450	75-345	LG 334
7-3H460	75-346	LG 334
7-3H480	75-348	LG 334
7-3H490	75-349	LG 334
7-3H500	75-350	LG 334
7-4H1000	75-400	LG 335
7-4H1020	75-402	LG 335
7-4H1140	75-414	LG 335
7-4H230	75-423	LG 334
7-4H240	75-424	LG 334
7-4H250	75-425	LG 334
7-4H260	75-426	LG 334
7-4H270	75-427	LG 334
7-4H280	75-428	LG 334
7-4H290	75-429	LG 334
7-4H310	75-431	LG 334
7-4H320	75-432	LG 334
7-4H330	75-433	LG 334
7-4H340	75-434	LG 334
7-4H350	75-435	LG 334
7-4H360	75-436	LG 334
7-4H370	75-437	LG 334
7-4H380	75-438	LG 334
7-4H390	75-439	LG 334
7-4H400	75-440	LG 334
7-4H410	75-441	LG 334
7-4H420	75-442	LG 334
7-4H430	75-443	LG 334
7-4H450	75-445	LG 334
7-4H460	75-446	LG 334
7-4H470	75-447	LG 334
7-4H4801	75-448	LG 334
7-4H490	75-449	LG 334
7-4H500	75-450	LG 334
7-4H510	75-451	LG 334
7-4H520	75-452	LG 334
7-4H530	75-453	LG 334
7-4H540	75-454	LG 334
7-4H550	75-455	LG 334
7-4H560	75-456	LG 334
7-4H570	75-457	LG 334
7-4H580	75-458	LG 334
7-4H590	75-459	LG 334
7-4H600	75-460	LG 334
7-4H610	75-461	LG 334
7-4H620	75-462	LG 334
7-4H630	75-463	LG 334
7-4H640	75-464	LG 334
7-4H650	75-465	LG 334
7-4H660	75-466	LG 334
7-4H670	75-467	LG 334
7-4H680	75-468	LG 334
7-4H690	75-469	LG 335
7-4H700	75-470	LG 335
7-4H710	75-471	LG 335
7-4H720	75-472	LG 335
7-4H730	75-473	LG 335
7-4H740	75-474	LG 335
7-4H750	75-475	LG 335
7-4H760	75-476	LG 335
7-4H770	75-477	LG 335
7-4H780	75-478	LG 335
7-4H790	75-479	LG 335
7-4H800	75-480	LG 335
7-4H810	75-481	LG 335
7-4H820	75-482	LG 335
7-4H830	75-483	LG 335
7-4H840	75-484	LG 335
7-4H850	75-485	LG 335
7-4H860	75-486	LG 335
7-4H870	75-487	LG 335
7-4H890	75-489	LG 335
7-4H900	75-490	LG 335
7-4H910	75-491	LG 335
7-4H920	75-492	LG 335
7-4H930	75-493	LG 335
7-4H950	75-495	LG 335
7-4H960	75-496	LG 335
7-4H970	75-497	LG 335
7-4H980	75-498	LG 335
7-4H990	75-499	LG 335
7-5H1000	75-500	LG 335
7-5H270	75-527	LG 334
7-5H290	75-529	LG 334
7-5H300	75-530	LG 334
7-5H310	75-531	LG 334
7-5H320	75-532	LG 334
7-5H330	75-533	LG 334
7-5H340	75-534	LG 334
7-5H350	75-535	LG 334
7-5H360	75-536	LG 334
7-5H370	75-537	LG 334
7-5H380	75-538	LG 334
7-5H390	75-539	LG 334
7-5H400	75-540	LG 334
7-5H410	75-541	LG 334
7-5H420	75-542	LG 334
7-5H430	75-543	LG 334
7-5H440	75-544	LG 334
7-5H450	75-545	LG 334
7-5H460	75-546	LG 334
7-5H470	75-547	LG 334
7-5H480	75-548	LG 334
7-5H490	75-549	LG 334
7-5H500	75-550	LG 334
7-5H510	75-551	LG 334
7-5H530	75-553	LG 334
7-5H540	75-554	LG 334
7-5H550	75-555	LG 334
7-5H560	75-556	LG 334
7-5H570	75-557	LG 334
7-5H580	75-558	LG 253
7-5H590	75-559	LG 334
7-5H600	75-560	LG 334
7-5H610	75-561	LG 334
7-5H620	75-562	LG 334
7-5H630	75-563	LG 253
7-5H640	75-564	LG 334
7-5H650	75-565	LG 253
7-5H660	75-566	LG 334
7-5H670	75-567	LG 334
7-5H680	75-568	LG 334
7-5H690	75-569	LG 335
7-5H700	75-570	LG 335
7-5H710	75-571	LG 335
7-5H720	75-572	LG 335
7-5H730	75-573	LG 335
7-5H740	75-574	LG 335
7-5H750	75-575	LG 335
7-5H760	75-576	LG 335
7-5H770	75-577	LG 335
7-5H780	75-578	LG 335
7-5H790	75-579	LG 335
7-5H800	75-580	LG 335
7-5H810	75-581	LG 335
7-5H820	75-582	LG 254
7-5H830	75-583	LG 335
7-5H840	75-584	LG 335
7-5H850	75-585	LG 335
7-5H860	75-586	LG 335
7-5H870	75-587	LG 335
7-5H880	75-588	LG 335
7-5H890	75-589	LG 335
7-5H900	75-590	LG 335
7-5H910	75-591	LG 335
7-5H920	75-592	LG 335
7-5H930	75-593	LG 335
7-5H940	75-594	LG 335
7-5H950	75-595	LG 335
7-5H960	75-596	LG 335
7-5H970	75-597	LG 335
7-5H990	75-599	LG 335

ROTARY

PART No.	OREGON	Page
10007	72-163	LG 1040
10009	75-263	LG 304
10011	75-211	LG 277
10018	07-025	LG 771
10027	75-208	LG 277
10029	75-199	LG 254
10036	75-283	LG 256
10037	75-230	LG 281
10040	75-961	LG 281
10041	75-967	LG 258
10042	75-368	LG 309
10043	75-268	LG 313
10044	75-216	LG 257
10055	49-036	LG 628
10066	97-022	LG 524
10071	91-256	LG 437
10072	96-364	LG 488
10073	596-730	LG 490
10074	92-119	LG 492
10076	175-912	LG 291
10076	75-912	LG 255
10077	175-654	LG 263
10077	75-654	LG 263
1008	94-017	LG 441
10084	33-760-0	LG 926
10086	49-070	LG 604
10087	72-094	LG 1042
10089	75-148	LG 300
1009	91-180	LG 460
10090	75-192	LG 251
10091	07-109	LG 778
10093	91-705	LG 540
10094	91-706	LG 550
10095	91-723	LG 508
10096	91-701	LG 545
10098	58-114	LG 960
1010	93-006	LG 444
10100	75-264	LG 304
10101	71-408	LG 957
10102	91-534	LG 578
10103	49-029	LG 609
10104	30-444	LG 187
10105	30-447	LG 186
10106	72-701	LG 1044
10118	46-306	LG 708
10127	70-371	LG 961
10128	34-060	LG 823
10129	34-061	LG 823
10131	34-062	LG 823
10133	34-063	LG 823
10134	34-064	LG 823
10139	34-051	LG 823
10140	34-050	LG 823
10141	34-052	LG 823
10146	34-053	LG 823
10149	34-055	LG 823
1015	98-019	LG 516
10152	34-056	LG 823
10153	34-058	LG 823
10154	34-057	LG 823
10156	78-026	LG 822
10158	34-106	LG 830
10169	76-014	LG 726
10183	30-957	LG 209
10184	30-074	LG 183
10184	30-172	LG 184
10185	44-365	LG 837
10186	44-367	LG 838
10189	82-245	
10190	33-516	LG 866
10192	55-994	LG 988
10193	70-143	LG 958
10206	07-017	LG 1022
1021	98-057	LG 513
10210	15-051	LG 250
10214	70-156	LG 961
1022	98-056	LG 512
10225	72-758	LG 1042
10226	78-023	LG 822
10227	78-022	LG 827
10228	04-015	LG 899
10231	55-284	LG 992
10232	175-913	LG 262
10232	75-913	LG 291
10237	49-305	LG 603
10238	65-224	LG 341
10239	80-146	LG 341
1024	198-052	LG 389
10243	69-239-0	
10244	69-242-0	
10249	91-378	LG 414

2019 Aftermarket X-Reference

ROTARY

PART No.	OREGON	Page
1025	75-917	LG 282
10250	72-165	LG 1041
10251	75-232	LG 281
10252	75-235	LG 281
10252	75-667	LG 282
10253	75-917	LG 282
10254	75-957	LG 282
1026	198-058	LG 517
10260	75-364	LG 304
10261	75-362	LG 256
10262	33-714	LG 918
10263	30-073	LG 183
10264	45-048	LG 854
10265	45-050	LG 224
10269	30-439-1	LG 190
10272	35-034	LG 807
10284	91-079	LG 485
10286	72-736	LG 1045
10288	72-735	LG 1045
10289	70-311	LG 960
1029	198-063	LG 513
1029	98-085	LG 561
10290	70-399	LG 960
10291	90-348	LG 484
10292	90-354	LG 488
10293	33-417	LG 731
10294	33-247	LG 731
10295	33-419	LG 732
10296	33-418	LG 731
10297	33-400	LG 732
1030	98-084	LG 512
10301	72-050	LG 1039
10301	72-051	LG 1039
10302	30-441	LG 202
10303	45-227	LG 234
10304	30-076	LG 188
10305	30-921	LG 202
10306	175-164	LG 262
10306	75-164	LG 262
1031	198-153	LG 520
10311	30-955	LG 212
10313	30-057	LG 200
10315	21-055	LG 981
10317	75-215	LG 313
10319	75-632	LG 314
1032	198-059	LG 403
10323	115-212	LG 325
10324	31-057	LG 930
10325	31-064	LG 931
1034	98-064-1	LG 514
10343	33-502	LG 743
10348	07-102	LG 774
10352	07-110	LG 776
10353	82-318	LG 884
10357	81-010	
10361	92-139	LG 398
10362	98-091	LG 516
10363	98-071	LG 411
10365	75-682	LG 258
10367	92-139	LG 398
10369	175-677	LG 304
10369	75-677	LG 304
1037	98-054	LG 574
10371	90-205	LG 501
10372	90-207	LG 472
10373	90-208	LG 502
10377	95-068	LG 376
10379	31-060	LG 922
1038	98-069	LG 404
10383	91-144	LG 454
10384	31-056	LG 927
10385	31-061	LG 922
10387	75-373	LG 322
10392	55-187	LG 631
10393	55-188	LG 631
10394	55-189	LG 631
10397	78-006	LG 828
10398	30-706	LG 201
10402	75-052	LG 313
10403	75-904	LG 313
10405	75-370	LG 257
10411	75-270	LG 257
10414	78-121	LG 827
1043	95-024	LG 465
10430	58-119	LG 960
10434	75-979	LG 255
10435	75-978	LG 293
10436	175-919	LG 293
10436	75-919	LG 293
10437	175-992	LG 293
10437	75-992	LG 293
1044	95-023	LG 380
10454	30-077	LG 188
10457	49-997	LG 628
10461	72-725	LG 1044
10462	33-348	LG 785
10463	49-996	LG 629
10464	31-108	LG 931
10465	31-103	LG 933
10468	07-022	LG 764
10469	31-049	LG 923
10471	49-146	LG 603
10473	31-109	LG 929
10474	49-913	LG 624
10475	49-997	LG 628
10476	49-912	LG 624
10477	30-438	LG 196
10478	07-409	LG 766
10479	49-995	LG 625
10480	49-143	LG 752
10481	50-420	LG 751
10482	50-421	LG 751
10483	50-422	LG 751
10484	07-393	LG 765
10485	75-976	LG 292
10486	75-918	LG 293
10561	33-730	LG 917
10563	75-658	LG 275
1060	99-117	LG 556
10626	75-242	LG 288
10627	75-243	LG 288
10634	191-108	LG 484
10635	191-139	LG 491
10636	91-073	LG 512
1065	91-244	LG 450
1066	91-242	LG 371
10662	40-141	LG 585
10667	91-264	LG 473
10673	33-407	LG 732
10674	33-735	LG 917
10677	33-337	LG 730
10678	30-436	LG 194
10679	30-437	LG 192
10680	30-703	LG 192
10682	55-337	LG 986
10683	33-729	LG 917
10684	46-004	LG 707
10686	46-050	LG 711
10687	60-021	LG 706
10688	46-320	LG 707
10690	60-025-0	LG 716
10691	60-026-0	LG 716
10692	60-030-0	LG 716
10693	60-031-0	LG 716
10694	60-032-0	LG 716
10695	60-033-0	LG 716
10697	46-327	LG 717
10699	07-156	LG 761
10702	40-140	LG 584
10709	33-740	LG 916
10711	72-736	LG 1045
10712	40-140	LG 584
10714	72-135	LG 1040
10715	72-161	LG 1038
10717	75-236	LG 282
10719	91-181	LG 495
10720	91-308	LG 467
10723	33-377	LG 943
10725	70-163	LG 964
10726	70-164	LG 964
10731	70-158	LG 964
10737	78-133	LG 831
10738	34-102	LG 830
10741	78-118-0	LG 830
10742	72-725	LG 1044
10745	75-669	LG 284
10749	75-298	LG 295
10750	75-672	LG 294
10751	75-246	LG 295
10754	36-028	LG 750
10755	36-027	LG 750
10756	58-068	LG 959
10758	72-458	LG 1031
10759	30-119	LG 191
10771	33-430	LG 729
10772	33-431	LG 729
10782	75-659	LG 275
10783	75-655	LG 274
10784	75-656	LG 274
10785	82-346	LG 885
10806	33-728	LG 917
10814	75-661	LG 277
10817	46-321	LG 707
10820	44-339	LG 841
10821	75-685	LG 324
10822	75-686	LG 324
10823	75-687	LG 297
10824	75-688	LG 297
10830	75-811	LG 254
10831	175-673	LG 305
10831	75-673	LG 305
10832	75-679	LG 309
10833	75-709	LG 305
10844	75-663	LG 279
10845	75-662	LG 258
10846	75-665	LG 279
10847	75-664	LG 279
10852	15-017	LG 279
10858	31-023	LG 933
10859	33-013	LG 949
10861	15-018	LG 279
10863	49-914	LG 165
10864	50-454	LG 756
10865	33-215	LG 866
10867	30-030	LG 218
10868	31-034	LG 933
10871	31-912	LG 929
10872	82-347	LG 885
10875	07-700	LG 767
10877	33-029-1	LG 927
10879	30-704	LG 194
10881	30-327	LG 199
10885	75-178	LG 281
10886	75-114	LG 281
10891	60-525	LG 702
10892	72-728	LG 1044
10892	72-729	LG 1044
10893	75-671	LG 287
10894	75-670	LG 288
10901	115-208	LG 275
10906	07-600	LG 770
10914	75-715	LG 313
1092	99-112	LG 556
10928	94-051	LG 570
10929	94-322	LG 520
10930	91-628	LG 387
10931	49-304	LG 603
10932	49-222	LG 604
10933	49-147	LG 603
10934	49-037	LG 622
10935	49-145	LG 603
10936	49-221	LG 604
10937	49-148	LG 603
10938	49-149	LG 604
10939	49-146	LG 603
10944	49-210	LG 628
10947	49-229	LG 609
10948	49-133	LG 609
10951	60-001	LG 708
10952	69-259-0	
10953	69-260-0	
10954	69-261-0	
10955	69-262-0	
10957	65-204	LG 342
10959	71-283	LG 957
10963	30-137	LG 214
10966	78-104	LG 823
1098	99-113	LG 528
10982	33-738	LG 921
10983	31-050	LG 924
10996	91-536	LG 395
1100	91-500	LG 416
11014	82-015	
11016	07-602	LG 770

ROTARY

PART No.	OREGON	Page
11017	75-977	LG 310
11019	175-676	LG 304
11019	75-676	LG 304
11021	72-113	LG 1035
11022	33-768-0	LG 926
11026	75-703	LG 295
11028	75-708	LG 295
11031	45-111	LG 939
11032	75-819	LG 292
11033	91-558	LG 448
11034	175-810	LG 263
11034	75-810	LG 257
11037	82-355	LG 892
11042	30-702	LG 185
11059	70-145	LG 959
11063	72-756	LG 1046
11070	33-118-1	LG 733
11071	33-119-1	LG 734
11072	33-184	LG 737
11073	33-127	LG 737
11074	33-189	LG 740
11075	33-137	LG 737
11077	50-435	LG 747
11130	75-899	LG 263
11133	33-135	LG 737
11139	91-311	LG 439
11140	49-078	LG 603
11144	78-050	LG 831
11164	50-603	LG 595
11166	50-607	LG 595
11177	50-619	LG 595
11178	50-620	LG 595
11179	50-621	LG 595
11180	195-072	LG 530
11198	19-031	LG 983
11199	19-032	LG 983
11200	19-033	LG 983
11201	19-034	LG 983
11205	30-966	LG 203
11206	82-356	LG 893
11207	34-109	LG 831
11217	72-737	LG 1045
11219	33-099	LG 946
11224	92-031	LG 433
11229	92-033	LG 442
11230	30-705	LG 200
11231	92-029	LG 435
11232	98-628	LG 389
11233	198-153	LG 520
11233	98-629	LG 412
11234	97-604	LG 525
11237	33-136	LG 737
11238	99-131	LG 555
11239	99-117	LG 556
1124	97-105	LG 523
11240	92-026	LG 435
11241	92-027	LG 432
11242	92-028	LG 433
11244	92-084	LG 442
11248	92-031	LG 433
11249	92-025	LG 440
11250	92-015	LG 407
11267	96-322	LG 567
1127	91-389	LG 538
11274	82-332	LG 891
11278	82-333	LG 892
11283	36-041	LG 754
11286	36-042	LG 754
11290	36-043	LG 754
11296	36-044	LG 754
11299	36-045	LG 754
11302	36-046	LG 754
1131	79-724	LG 556
11330	31-635	LG 937
1136	79-728	LG 556
1137	40-408	LG 589
1138	40-402	LG 589
1139	40-411	LG 589
1143	40-403	LG 589
11444	33-115	LG 738
11445	33-188	LG 738
1145	40-502	LG 586
11458	42-007	LG 744
11468	75-207	LG 256
11469	96-749	LG 433
1147	40-807	LG 585
11470	33-002	LG 946
11473	30-443	LG 218
11474	09-260	LG 870
11475	91-058	LG 411
11476	98-083	LG 404
11477	91-057	LG 409
11478	98-082	LG 513
11479	98-087	LG 407
1148	40-409	LG 585
11480	198-086	LG 565
11482	175-995	LG 303
11482	75-995	LG 303
11483	175-993	LG 303
11483	75-993	LG 303
11488	33-741	LG 917
1149	40-110	LG 584
11491	92-103	LG 487
11495	92-030	LG 567
11496	92-082	LG 433
11498	92-057	LG 442
11501	392-057	LG 443
11504	75-292	LG 281
11505	30-130	LG 205
11506	98-087	LG 407
11507	198-086	LG 565
11510	49-088-0	LG 631
11512	46-310	LG 713
11513	46-316	LG 707
11522	72-723	LG 1043
11547	30-919	LG 188
11548	02-099	LG 722
11549	07-154	LG 761
11555	97-021	LG 524
11556	96-318	LG 414
11557	92-044	LG 471
11558	96-363	LG 499
11564	98-081	LG 406
11579	31-006	LG 935
11580	30-156	LG 213
11587	30-155	LG 213
11588	33-180	LG 949
11590	82-026	LG 872
11591	82-126	LG 873
11593	192-106	LG 491
11594	92-615	LG 491
11595	92-104	LG 485
11596	92-616	LG 485
11632	78-054	LG 824
11633	78-052	LG 824
11634	78-013	LG 825
11635	78-014	LG 825
11640	60-028	LG 718
11643	40-707	LG 590
11645	40-707	LG 590
11647	40-703	LG 590
11659	55-079	LG 214
11660	175-813	LG 276
11660	75-813	LG 276
11661	175-994	LG 304
11661	75-994	LG 304
11663	91-482	LG 434
11664	33-117	LG 733
1167	65-206	LG 342
1170	82-514	LG 869
1171	82-677	LG 903
11719	98-072	LG 408
1172	82-493	LG 869
11721	92-045	LG 474
11723	31-732	LG 937
11724	31-740	LG 937
11725	31-742	LG 937
11726	31-750	LG 937
11727	31-752	LG 937
11728	31-760	LG 937
11738	31-140	LG 937
11739	31-142	LG 937
11740	31-150	LG 937
11741	31-152	LG 937
11742	31-160	LG 937
11757	55-286	LG 992
11769	492-726	LG 436
11770	492-726	LG 436
11773	492-731	LG 436
11776	392-206	LG 436
1178	65-229	LG 342
11788	392-203	LG 442
11792	392-204	LG 443
11793	30-064	LG 194
11795	30-087	LG 182
11805	98-080	LG 512
11806	30-956	LG 216
11809	70-394	LG 958
11810	92-039	LG 470
11812	02-405	LG 790
11813	07-066	LG 778
11819	72-119	LG 1040
1182	80-122	LG 340
11820	75-812	LG 275
11821	94-068	LG 441
11828	33-125-1	LG 736
11829	33-126-1	LG 736
11830	55-406-0	LG 995
11835	45-064	LG 236
11841	30-055	LG 204
11842	30-708	LG 204
11843	175-706	LG 276
11843	75-706	LG 256
11844	175-710	LG 276
11844	75-710	LG 257
11845	175-714	LG 276
11845	75-714	LG 276
11846	75-600	LG 276
11847	175-814	LG 276
11847	75-814	LG 276
11848	15-025	LG 255
11849	75-823	LG 254
11852	57-016	LG 677
11853	75-193	LG 269
11856	92-042	LG 472
11858	33-114	LG 734
11859	33-133	LG 736
11861	75-892	LG 255
11863	115-205	LG 258
11864	175-894	LG 291
11864	75-894	LG 263
11865	30-056	LG 208
11867	175-895	LG 263
11867	75-895	LG 263
11868	99-134	LG 527
1191	09-802	LG 233
11958	49-214	LG 624
11959	49-363	LG 624
11961	82-411	LG 878
11962	82-403	LG 879
11963	82-412	LG 53
11964	82-359	LG 893
11988	55-284	LG 992
11989	49-208	LG 756
11990	49-193	LG 756
11991	49-207	LG 756
11996	76-025	LG 941
11997	75-134	LG 275
12001	30-712	LG 205
12015	72-020	LG 1039
12018	72-050	LG 1039
12018	72-164	LG 1040
12019	31-070	LG 922
12043	49-246	LG 627
12048	70-161	LG 964
12060	72-021	LG 1040
12065	33-733	LG 917
12066	82-517	LG 896
12067	75-637	LG 253
12068	75-641	LG 314
12069	75-642	LG 314
12071	75-644	LG 314
12072	75-645	LG 314
12073	75-646	LG 257
12077	175-295	LG 295
12077	75-295	LG 295
12078	175-300	LG 295
12078	75-300	LG 295
12079	31-075	LG 923
12080	30-123	LG 183
12083	33-521	LG 785
12085	15-047	
12087	33-734	LG 917
12093	27-001	

2019 Aftermarket X-Reference

ROTARY

PART No.	OREGON	Page
12094	15-123	LG 284
12096	15-124	LG 284
12097	15-125	LG 284
12100	15-127	LG 284
12105	21-355	LG 981
12107	15-128	LG 284
12114	33-121	LG 734
12119	45-263	LG 224
12121	95-605	LG 463
12122	95-084	LG 494
12123	95-087	LG 460
12124	95-085	LG 462
12125	95-086	LG 425
12127	07-318	LG 771
12135	21-980	LG 981
12136	21-995	LG 981
12137	21-905	LG 981
12138	21-930	LG 981
12139	21-480	LG 981
12140	21-495	LG 981
12141	21-405	LG 981
12142	21-430	LG 981
12143	21-455	LG 981
12149	21-880	LG 981
12150	21-895	LG 981
12151	21-805	LG 981
12152	21-830	LG 981
12153	21-855	LG 981
12154	21-080	LG 981
12155	21-095	LG 981
12156	21-005	LG 981
12157	21-030	LG 981
12165	20-020	LG 979
12166	20-021	LG 979
12167	20-022	LG 979
12175	20-026	LG 979
12176	20-027	LG 979
12177	20-028	LG 979
12179	20-023	LG 979
12180	20-024	LG 979
12181	20-025	LG 979
12184	69-171	LG 981
12185	69-172	LG 981
12188	21-480	LG 981
12189	21-495	LG 981
12190	21-405	LG 981
12191	21-430	LG 981
12192	21-880	LG 981
12193	21-895	LG 981
12194	21-805	LG 981
12195	21-830	LG 981
12196	21-080	LG 981
12197	21-095	LG 981
12198	21-005	LG 981
12199	21-030	LG 981
12219	82-408	LG 878
12220	33-243	LG 786
12227	33-128-1	LG 741
12236	82-401	LG 879
12237	115-204	LG 282
12240	95-099	LG 400
12241	82-021	LG 884
12242	195-070	LG 469
12247	33-139	LG 736
12249	15-046	LG 314
12251	92-054	LG 434
1226	82-306	LG 874
12261	33-137	LG 737
12263	49-916	LG 629
1227	82-307-0	LG 874
12272	30-449	LG 188
12273	94-059	LG 564
12275	34-066	LG 832
12276	78-046	LG 826
12277	34-201	LG 822
12282	30-145	LG 184
12283	30-975	LG 188
12286	15-022	LG 292
12291	55-987	
12293	49-223	LG 604
12297	78-026	LG 822
12304	49-235	LG 625
12319	75-756	LG 279
12320	75-755	LG 258
12322	15-019	LG 279
12329	31-062	LG 922
12330	31-065	LG 922
12361	45-831	LG 234
12362	96-382	LG 564
12368	31-068	LG 922
12371	75-629	LG 314
12373	175-299	LG 295
12373	75-299	LG 295
12377	30-121	LG 190
12379	85-052	LG 907
12380	92-110	LG 491
12382	75-886	LG 276
12384	55-284	LG 992
12405	75-231	LG 281
12409	42-005	LG 744
12415	75-757	LG 256
12416	75-759	LG 279
12419	78-025	LG 829
12424	33-104	LG 735
12425	15-005	LG 282
12427	78-112	LG 829
12429	75-158	LG 251
12448	82-516	LG 896
12461	175-800	
12461	75-800	LG 257
12470	49-847	LG 610
12471	49-849	LG 610
12478	70-396	LG 961
12479	30-975	LG 188
12480	75-914	LG 291
12484	72-446	LG 1030
12489	15-026	LG 277
12494	33-772	LG 916
12495	82-360	LG 893
12497	30-149	LG 211
12515	07-063	LG 775
12517	33-153	LG 737
12529	73-562-0	LG 842
12533	73-819	LG 843
12559	75-802	LG 296
12560	175-803	LG 296
12560	75-803	LG 258
12561	55-249	LG 215
12562	92-109	LG 489
12563	195-019	LG 466
12570	55-243	LG 215
12571	55-248	LG 215
12572	55-246	LG 214
12573	55-262	LG 215
12598	07-127	LG 764
12605	07-126	LG 764
12609	175-815	LG 277
12609	75-815	LG 277
12610	15-013	LG 256
12612	82-519	LG 897
12613	78-047	LG 832
12619	07-160	LG 774
1262	78-675	LG 839
12621	33-134	LG 736
1263	78-677	LG 839
12641	15-114	LG 282
12642	49-443	LG 630
12643	92-114	LG 493
12644	78-056	LG 825
12648	72-025	LG 1039
12649	96-607	LG 571
12654	33-117	LG 733
12655	31-050	LG 924
12656	31-047	LG 925
12657	31-116	LG 925
1266	45-620	LG 225
12661	78-053	LG 824
12667	75-716	LG 276
12668	82-022	LG 886
12671	70-144	LG 959
12673	30-167	LG 184
12674	30-159	LG 205
12675	78-065	LG 832
1268	35-023	LG 806
12682	78-066	LG 838
12685	33-376	LG 942
12686	15-024	LG 292
12687	75-225	LG 322
1269	35-012	LG 806
12696	78-022	LG 827
12697	33-744	LG 918
1270	35-001	LG 806
1270	35-007	LG 806
12707	31-041	LG 932
12710	33-742	
12714	89-001	LG 590
12716	30-333	LG 216
12718	75-648	LG 257
12719	75-649	LG 258
1272	35-023	LG 806
12721	96-370	LG 533
12728	65-002	LG 340
12729	75-887	LG 323
12730	75-888	LG 322
12732	95-621	LG 402
12733	30-445	LG 189
1274	35-003	LG 809
12749	81-015	LG 802
1275	35-005	LG 806
12752	33-152	LG 942
12758	30-164	LG 200
12759	15-009	LG 296
12760	15-010	LG 296
12762	33-083	LG 947
12764	70-403	LG 958
12765	58-362	LG 958
12765	70-404	LG 958
12767	70-405	LG 958
12768	15-112	LG 305
12769	75-816	LG 257
1277	35-006	LG 808
12773	49-906	LG 615
12778	82-328	LG 891
1278	35-004	LG 806
12783	15-004	LG 282
12784	69-034	LG 217
12786	30-157	LG 201
12787	30-158	LG 201
1279	35-008	LG 808
12790	15-027	LG 306
12791	15-028	LG 277
12797	30-185	LG 203
12801	30-963	LG 195
12802	33-411	LG 732
12807	82-322	LG 883
12808	82-323	LG 883
12809	91-938	LG 514
12813	49-219	LG 625
12820	21-000	LG 985
12824	75-631	LG 314
1283	35-014	LG 806
1285	33-210	LG 867
12852	91-610	LG 554
12856	45-075	LG 241
12857	45-074	LG 242
12861	83-403	LG 818
12862	83-404	LG 818
12863	83-403	LG 818
12864	83-402	LG 817
12865	07-122	LG 775
12867	15-016	LG 323
12877	30-161	LG 184
12883	82-405	LG 878
12891	78-028	LG 831
12892	115-029	LG 255
12893	92-140	LG 516
12894	30-448	LG 188
12895	30-446	LG 188
12909	98-094	LG 514
1291	42-452	LG 867
12910	82-359	LG 893
12913	72-725	LG 1044
12923	33-159	LG 733
12926	85-044	LG 906
12933	49-084	LG 759
12964	30-122	LG 183
12965	60-527	LG 714
12967	82-409	LG 878
12968	30-172	LG 184
12972	82-518	LG 897
12973	82-408	LG 878
12974	95-074	LG 533
1298	33-201	LG 867
12980	33-122-1	LG 734

X

ROTARY

PART No.	OREGON	Page
12985	30-181	LG 189
12995	92-116	LG 500
12996	49-440	LG 618
12998	49-883	LG 618
1300	31-232	LG 937
13001	82-402	LG 879
13006	82-349	LG 886
13009	82-674	LG 904
1301	31-240	LG 937
13016	93-601	LG 432
13017	596-702	LG 388
1302	31-242	LG 937
13023	95-076	LG 404
1303	31-250	LG 937
1304	31-252	LG 937
13042	73-059	LG 850
13043	73-825	LG 850
13049	30-139	LG 183
1305	31-260	LG 937
1308	31-540	LG 937
1309	31-542	LG 937
13094	81-020	LG 803
13097	49-884	LG 619
1310	31-550	LG 937
13101	31-067	LG 935
13103	49-978	LG 609
13106	33-083	LG 947
1311	31-552	LG 937
13115	07-124	LG 776
13116	07-407	LG 767
13119	55-515	LG 211
13129	96-362	LG 570
13131	82-407	LG 880
13132	30-170	LG 198
13137	50-446	
13141	50-640	LG 598
13142	50-641	LG 598
13143	50-642	LG 598
13146	50-646	LG 598
13147	50-647	LG 598
13148	50-649	LG 598
13149	50-650	LG 599
13150	50-651	LG 599
13151	50-652	LG 599
13152	50-653	LG 599
13153	50-654	LG 599
13154	50-655	LG 600
13155	50-656	LG 600
13160	30-853	LG 213
13165	70-146	LG 959
13170	73-043	LG 847
13171	07-072	LG 763
13172	31-093	LG 932
1318	31-100	LG 929
13185	49-904	LG 614
13194	50-668	LG 597
13195	50-670	LG 597
13196	50-634	LG 597
13197	50-669	LG 597
13198	49-915	LG 597
13199	50-637	LG 597
1320	31-604	LG 937
13202	50-636	LG 596
13217	75-984	LG 257
13220	82-044	LG 879
13224	50-438	LG 747
13225	76-042	LG 939
13229	45-071	LG 242
13231	49-700	LG 605
13234	82-358	LG 892
13237	83-302	LG 816
13239	195-072	LG 530
1324	43-404	LG 928
13245	70-154	LG 961
13248	33-093	LG 946
1325	31-051	LG 924
13251	15-023	LG 256
13252	31-918	LG 922
1326	43-400-0	LG 936
13262	49-897	LG 617
13263	49-882-0	LG 613
13264	46-051	LG 712
13265	49-420	LG 606
13266	49-421	LG 607
13267	49-422	LG 607
13270	49-426	LG 607
13271	49-427	LG 607
13272	49-428	LG 607
13273	49-429	LG 607
13274	49-430	LG 607
13275	49-432	LG 607
13276	49-433	LG 608
13278	33-089	LG 946
13279	72-131	LG 1041
13280	72-133	LG 1040
13281	72-134	LG 1040
13291	49-899	LG 617
13292	49-823-0	LG 618
13292	49-867	LG 618
13293	49-898	LG 618
13294	49-438	LG 615
1330	31-908	LG 929
13301	15-132	LG 306
13338	33-526	LG 928
13341	73-560	LG 844
13346	73-564-0	LG 843
13348	92-102	LG 458
13350	60-108	LG 703
13359	45-057	LG 249
13360	51-014	LG 941
13361	95-077	LG 461
13365	49-825	LG 606
13365	49-891-0	LG 617
1337	23-595	LG 983
13371	51-223	LG 726
13372	51-224	LG 726
13374	4998I	
13375	55-294	LG 986
13377	55-265	LG 986
13391	49-274	LG 614
13399	72-169	LG 1033
13402	70-422	LG 964
13409	78-098	LG 832
13414	45-234	LG 224
13415	49-281	LG 613
13418	45-258	LG 224
13420	49-287	LG 620
13429	4205M	LG 761
13430	46-335	LG 719
13431	46-334	LG 719
1344	23-580	LG 983
13449	41-920	LG 1014
1345	02-861	LG 766
13455	49-209	LG 625
13457	45-117	LG 938
1346	02-860	LG 766
13463	91-532	LG 448
13464	91-531	LG 393
1347	07-400	LG 767
13470	48-232	LG 724
1348	07-001	LG 765
13481	99-132	LG 539
13482	99-133	LG 542
13488	49-859	LG 616
13489	49-894	LG 619
1349	07-100	LG 774
13490	49-852	LG 611
13505	75-906	LG 251
13506	75-983	LG 862
13507	75-909	LG 251
13508	75-908	LG 265
13509	75-907	LG 264
1351	07-016	LG 762
13510	50-441	LG 748
13514	50-555	LG 753
13517	50-426	LG 753
13518	50-423	LG 753
13520	50-425	LG 753
13524	49-314	LG 910
13526	50-408	LG 745
13531	55-008	LG 771
13532	31-094	LG 932
13537	49-219	LG 625
13569	15-137	LG 323
1357	07-102	LG 774
13570	15-138	LG 323
13571	15-139	LG 323
13572	15-140	LG 323
13573	15-141	LG 323
13578	07-450	LG 761
1358	07-103	LG 775
1358	07-332	LG 776
13586	56-022	LG 686
1359	07-303	LG 770
13597	55-299	LG 986
13598	55-297	LG 986
13599	55-344	LG 986
13600	55-336	LG 986
13601	55-339	LG 986
13602	55-349	LG 986
13603	55-348	LG 986
13605	85-029	LG 909
13620	82-675	LG 904
13621	82-676	LG 904
13622	78-045	LG 828
13625	35-050	LG 809
13631	82-054	LG 898
13641	30-916	LG 185
13644	30-851	LG 184
13650	50-450	LG 753
13652	07-331	LG 776
1368	23-530	LG 983
1369	30-923	LG 186
1370	30-906	LG 185
1371	30-907	LG 186
1372	30-908	LG 185
1373	30-909	LG 186
1374	30-044	LG 179
1375	30-910	LG 186
1376	30-913	LG 185
1377	30-941	LG 219
1379	30-949	LG 209
1380	30-950	LG 209
1381	30-205	LG 219
1382	30-083	LG 219
1384	30-081	LG 205
1385	30-082	LG 205
1386	30-080	LG 205
1388	30-093	LG 206
1389	30-095	LG 206
1390	30-070	LG 216
1391	07-204	LG 778
1395	30-091	LG 217
1396	30-132	LG 179
13973	33-124	LG 736
1398	30-903	LG 186
13987	396-524	LG 415
13988	84-031	LG 675
13990	84-030	LG 675
1400	07-201	LG 779
14009	33-138	LG 738
1401	50-101	LG 746
14023	60-103	LG 702
14029	33-246	LG 732
14035	72-162	LG 1038
14041	33-245	LG 786
14045	33-185	LG 737
1405	50-410	LG 745
1406	50-409	LG 745
14076	95-092	LG 423
1408	49-840	LG 609
1408302s	30-190	LG 207
14089	30-186	LG 184
1409	49-201	LG 608
14090	34-206	LG 826
14095	92-048	LG 498
14096	92-124	LG 497
14099	30-183	LG 189
1411	49-239	LG 609
14110	50-659	LG 600
14111	50-657	LG 596
14112	50-658	LG 596
14116	115-220	LG 264
14117	115-222	LG 264
14118	115-219	LG 305
14127	55-995	
1413	49-101	LG 602
14130	115-145	LG 323
14146	50-428	LG 752
14149	91-611	LG 527
1416	49-693	LG 602
14165	15-115	LG 282
14167	15-117	LG 283
1419	49-033	LG 628
14209	15-119	LG 283
1421	49-301	LG 606
14216	91-605	LG 544
14217	15-116	LG 283

2019 Aftermarket X-Reference

ROTARY

PART No.	OREGON	Page
14220	33-431	LG 729
14222	33-431	LG 729
14233	68-373	LG 962
1424	49-077	LG 628
14242	34-103	LG 830
14243	75-799	LG 293
1425	49-004	LG 622
14255	34-104	LG 830
1426	49-003	LG 622
1427	49-002	LG 623
1428	49-006	LG 622
14282	82-057	LG 905
14283	82-053	LG 905
14285	41-938	LG 1014
14286	41-939	LG 1014
14289	30-182	LG 185
1429	49-005	LG 622
1430	49-039	LG 629
14306	46-332	LG 720
14315	33-150	LG 787
14319	115-146	LG 256
14323	33-083	LG 947
14324	60-059	LG 706
14328	82-058	LG 898
1434	49-025	LG 629
14341	46-041	LG 706
1435	02-407	LG 790
14363	15-126	LG 284
14368	55-140-0	LG 989
14374	55-147-1	
14375	55-145-1	LG 989
14383	49-442	LG 619
14390	75-296	LG 295
1440	02-404	LG 790
1441	49-041-0	LG 749
1442	49-040-0	LG 749
14437	48-233	LG 724
14440	48-235	LG 886
1445	49-045	LG 749
14459	195-072	LG 530
1447	49-047	LG 749
14475	96-364	LG 488
14481	92-115	LG 499
14482	92-122	LG 499
14488	92-127	LG 498
1449	49-016	LG 759
14500	55-971	LG 988
14501	55-973	LG 988
14512	115-221	LG 862
14513	115-223	LG 250
1453	36-001	
14556	68-374	LG 962
14577	55-972	LG 988
1461	36-022	LG 750
14657	92-102	LG 458
1466	36-005	LG 750
1470	50-411	LG 745
1471	50-408	LG 745
1474	50-407	LG 758
1479	50-544	LG 747
1480	50-542	LG 747
1482	50-027	LG 747
1484	50-541	LG 747
1491	50-032	LG 759
1494	49-099	LG 748
1498	49-355	LG 746
1501	49-153	LG 758
1503	49-128	LG 747
1522	49-014	LG 759
1529	36-101	LG 750
1544	49-802	LG 610
1547	55-610	LG 191
1550	55-211	LG 191
1551	49-801	LG 610
1567	55-613	LG 211
1568	55-612	LG 211
158	02-644-0	LG 748
1708307s	30-188	
1708312s	30-189	LG 207
1720	42-455	LG 721
17327	31-604	LG 937
1746	42-550	
1747	42-551	
1764	33-340	LG 784
1778	33-365	LG 784
1780	33-362	LG 784
1781	33-333	LG 786
182	49-083	LG 913
1884	33-363	LG 787
1927	33-320-0	LG 731
1928	33-385	LG 942
1929	33-332	LG 730
1930	33-390	
1931	33-389	LG 945
1932	47-081	LG 744
1933	47-121	LG 744
1934	47-161	LG 744
1935	47-201	LG 744
1936	47-051	LG 744
1937	47-038	LG 743
1938	47-014	LG 743
1939	33-021	LG 950
1940	47-080	LG 744
1941	47-120	LG 744
1942	47-160	LG 744
1943	47-200	LG 744
1944	47-050	LG 744
1950	33-070	LG 742
1994	86-001	LG 781
1997	86-005	LG 782
1998	86-008	LG 782
1999	86-010	LG 782
2000	91-805	LG 560
2001	91-806	LG 447
2006	99-103	LG 551
2007	99-107	LG 551
201	33-301	LG 743
2012	97-016	LG 524
2013	97-015	LG 527
204	33-313	LG 743
205	33-302	LG 743
2078	91-714	LG 543
2079	91-713	LG 422
208	33-307	LG 743
2081	92-146	LG 539
210	33-312	LG 743
2148	40-316	LG 586
2160	91-291	LG 457
2162	95-014	LG 374
2171	94-021	LG 573
2172	91-183	LG 370
2173	91-184	LG 421
2174	93-008	LG 510
2175	34-003	LG 821
2176	34-008	LG 821
2182	34-036	LG 821
2183	34-044	LG 821
2185	78-640	LG 835
2186	78-641	LG 835
2187	78-643	LG 835
2188	78-031	LG 826
2190	34-027	LG 821
2191	34-028	LG 821
2192	34-029	LG 821
2209	45-103	LG 938
2210	45-104	LG 939
2212	45-114	LG 938
2213	45-301	LG 804
2214	45-302	LG 804
2215	45-305	LG 804
2216	45-306	LG 804
2218	48-200	LG 694
2224	43-075	
2228	73-560	LG 844
223	60-100	LG 721
2234	31-908	LG 929
2235	07-308	LG 772
2238	09-801	LG 229
2239	31-100	LG 929
2243	48-205	LG 694
228	60-522	LG 715
2281	35-016	LG 809
2282	35-028	LG 810
2283	35-015	LG 810
2284	35-032	LG 809
2294	35-001	LG 806
2294	35-007	LG 806
2296	35-005	LG 806
231	60-353	LG 719
233	60-061	LG 718
234	60-991	LG 718
235	60-209	LG 700
236	60-365	LG 700
237	60-122	LG 721
239	60-426	LG 699
241	60-409	LG 700
244	60-408	LG 700
2444	43-685	LG 936
2445	43-699	LG 936
245	74-054	LG 721
246	74-072	LG 721
248	74-732	LG 721
249	02-108	LG 723
250	02-115	LG 723
252	02-103	LG 722
253	33-240	LG 948
257	46-200	LG 722
262	60-048	LG 722
263	60-065	LG 722
264	60-060	LG 722
2658	40-843	LG 588
2661	40-845	LG 588
2663	40-140	LG 584
2668	40-132	LG 586
2669	40-132	LG 586
267	02-098	LG 722
2670	40-131	LG 586
2671	40-130	LG 586
2672	40-130	LG 586
2673	40-503	LG 589
2681	49-667	LG 750
2690	95-011	
27	02-416	
2700	46-024	LG 719
2701	02-111	LG 723
271	72-450	LG 1037
272	72-510	LG 1036
273	72-301	LG 1037
2733	49-107	LG 749
2734	49-100	LG 749
2735	49-112	LG 749
2736	49-120	LG 759
274	72-427	LG 1029
2745	50-302	LG 758
276	72-430	LG 1034
2760	50-548	LG 759
2761	50-025-0	LG 747
2762	50-033	LG 759
2764	50-041	LG 757
2772	36-100	LG 750
2773	30-097	LG 179
2774	30-098	LG 206
2775	30-100	LG 217
2777	30-101	LG 179
2778	30-105	LG 179
278	72-437	LG 1030
2780	30-125	LG 206
2782	30-954	LG 220
2784	30-301	LG 217
2786	30-920	LG 186
2788	30-094	LG 180
2789	30-700	LG 180
2790	30-430	LG 211
2792	30-432	
2797	30-929	LG 187
280	72-106	LG 1029
2803	30-303	LG 198
2805	30-933	LG 195
2806	30-104	LG 180
2808	30-405	LG 193
281	72-107	LG 1029
282	72-108	LG 1031
2828	30-304	LG 199
2829	30-111	LG 217
2838	30-710	LG 181
2839	30-711	LG 218
2840	30-106	LG 179
2841	30-720	LG 180
2842	30-117	LG 219
2843	30-421	LG 220
2844	30-946	LG 207
285	72-410	LG 1030
286	72-442	LG 1037
2884	49-102	LG 602

X

ROTARY

PART No.	OREGON	Page
2885	49-989	LG 602
2886	49-401	LG 605
289	72-449	LG 1030
2892	82-244	LG 910
2904	85-001	LG 908
2915	34-022	LG 822
2916	78-027	LG 832
2917	34-004	LG 832
2917	78-021	LG 832
2918	34-824	LG 832
2919	34-043	LG 823
2922	33-386	LG 942
2925	82-243	LG 902
2926	44-323	LG 838
2932	42-008	LG 945
2934	48-001	LG 914
2936	45-087	LG 243
2937	85-005	
2938	42-009	LG 945
2950	49-035	LG 629
2961	50-502	LG 756
2966	72-436	LG 1034
2976	72-508	LG 1034
2977	72-500	LG 1034
2980	72-436	LG 1034
2985	72-510	LG 1036
2989	72-436	LG 1034
2991	72-117	LG 1036
2998	72-746	LG 1032
2999	72-747	LG 1036
300	76-067-0	LG 726
301	51-001-0	LG 727
30127	55-545	LG 992
30130	55-305-1	LG 992
3023	43-562	LG 936
3037	43-540	LG 936
304	71-108	LG 957
305	71-107	LG 957
3068	43-694	LG 936
3105	55-218	LG 209
3108	55-214	LG 209
3109	55-212	LG 209
3111	55-207	LG 191
3112	55-226	LG 212
3116	55-240	LG 214
3200	45-082	LG 854
3202	45-088	LG 240
3209	45-091	LG 249
3211	45-092	LG 854
3216	45-019	LG 239
3217	45-220	LG 232
3221	84-010	LG 913
3222	45-094	LG 249
3223	05-060	LG 914
3228	45-208	LG 245
3229	45-209	LG 246
3236	34-004	LG 832
3239	72-745	LG 1033
324	45-112	LG 241
3244	45-110	LG 245
325	45-012	LG 224
326	45-058	LG 232
3264	71-408	LG 957
3265	71-105	LG 957
3266	71-275	LG 956
3268	71-402	LG 956
327	45-034	LG 224
3275	58-332	LG 959
3276	72-796	LG 1043
328	45-000	LG 237
329	45-080	LG 249
3305	45-098	LG 243
3306	05-060	LG 914
3316	78-676	LG 839
3317	44-332	LG 838
3319	33-331	LG 730
3320	72-100	
3320	72-304	LG 1038
3322	91-005	LG 458
3329	91-609	LG 469
3329	93-025	LG 482
3339	91-253	LG 415
3346	91-342	LG 447
3356	98-037	LG 574
3361	94-018	LG 565
3362	94-011	LG 572
3372	91-502	LG 477
3374	91-235	LG 461
3377	91-557	LG 545
3379	91-558	LG 448
3380	91-532	LG 448
3386	91-430	LG 497
339	45-079	LG 249
3390	97-110	LG 525
3392	95-015	LG 400
3393	94-039	LG 561
3395	94-038	LG 568
3400	93-009	LG 476
3401	93-010	LG 432
3402	93-011	LG 557
3403	91-266	LG 431
3404	91-622	LG 536
3405	94-022	LG 565
3406	96-005	
3421	91-761	LG 578
3423	91-911	LG 576
3424	91-128	LG 424
3425	91-547	LG 449
3430	97-330	LG 528
3434	91-626	LG 552
3441	94-026	LG 369
3442	91-623	LG 485
3445	91-912	LG 576
3446	91-913	LG 576
345	76-002	LG 726
3450	02-700	LG 765
3452	02-701	LG 765
3459	72-406	LG 1029
346	70-320	LG 959
3460	72-407	LG 1029
3461	72-408	LG 1029
3462	07-307	LG 770
3469	91-352	LG 482
347	58-071	LG 959
348	58-077	LG 959
349	58-132	LG 960
350	58-133	LG 960
3505	23-180	LG 983
3509	23-195	LG 983
3510	21-105	LG 981
3512	55-185	LG 1027
3513	21-505	LG 981
3515	23-131	LG 983
3518	23-780	LG 983
3519	23-795	LG 983
352	71-400	LG 956
3520	23-705	LG 983
3539	49-841	LG 626
354	71-101	LG 956
354	71-600	LG 956
355	71-103	LG 956
355	71-800	LG 956
3550	49-411	LG 759
3551	49-402	LG 758
3552	49-150	LG 758
3554	49-403	LG 758
3555	50-548	LG 759
357	71-405	LG 956
358	71-816	LG 956
359	70-312	LG 959
360	71-101	LG 956
362	58-075	LG 959
364	71-002	LG 957
3644	49-803	LG 610
3651	50-204	LG 758
3653	50-206	LG 758
3655	49-021	LG 629
3667	49-804	LG 610
367	45-108	LG 894
3672	49-111	LG 748
3673	49-131	LG 745
368	71-001	LG 957
371	72-800	LG 1047
373	72-804	LG 1047
379	72-804	LG 1047
382	45-277	LG 242
383	32-100	LG 676
384	32-101	LG 676
385	32-105	LG 676
386	32-107	LG 676
387	32-111	LG 676
388	32-112	LG 676
389	32-114	LG 676
390	32-116	LG 676
3902	07-207	LG 779
3903	07-206	LG 776
3904	07-205	LG 779
3905	07-215	LG 776
392	32-110	LG 676
394	32-103	LG 676
395	32-108	LG 676
399	02-187	LG 676
400	02-188	LG 676
401	02-190	LG 676
402	02-191	LG 676
403	02-192	LG 676
404	02-194	LG 676
405	02-195	LG 676
406	02-196	LG 676
408	02-193	LG 676
411	02-175	LG 676
412	02-176	LG 676
413	02-177	LG 676
414	02-178	LG 676
415	02-179	LG 676
416	02-180	LG 676
417	02-182	LG 676
4179	49-812	LG 612
418	02-184	LG 676
4180	49-816	LG 612
4181	49-814	LG 614
4182	49-806	LG 611
4183	49-805	LG 609
4184	49-810	LG 612
4186	49-807	LG 611
4197	07-253	LG 761
4198	07-251	LG 761
4199	07-252	LG 761
420	02-181	LG 676
4200	07-250	
4209	49-809	LG 613
4210	49-854	LG 615
4215	57-010	LG 677
4218	57-017	LG 677
4219	57-002	LG 677
4220	57-006	LG 677
4223	57-001	LG 677
430	72-318	LG 1042
4301	49-835	LG 611
4302	49-846	LG 608
436	44-347	LG 840
4413	41-920	LG 1014
4414	41-921	LG 1014
442	45-259	LG 224
455	84-004	LG 675
456	84-002	LG 675
457	84-001	LG 675
458	84-007	LG 675
463	84-005	LG 675
464	84-008	LG 675
469	48-048	LG 725
470	48-049	LG 725
4720	33-207	LG 949
4793	04-008	LG 686
483	45-243	LG 243
4833	56-025	LG 687
484	45-295	LG 232
487	45-035	LG 226
4918	55-340	LG 627
4923	49-844	LG 612
4971	07-009	LG 762
4972	07-008	LG 762
4995	07-200	LG 778
4996	49-860	LG 616
4998	75-005	LG 307
4999	75-010	LG 311
5007	75-324	LG 334
5008	75-625	LG 313
5010	75-327	LG 334
5011	75-328	LG 334
5012	75-329	LG 334
5013	75-330	LG 334
5014	75-631	LG 314
5017	75-634	LG 314

2019 Aftermarket X-Reference

ROTARY

PART No.	OREGON	Page
5018	75-635	LG 314
50188	45-253	LG 224
50189	45-255	LG 224
5019	75-336	LG 334
50190	45-227	LG 234
50190	45-264	LG 224
50191	45-207	LG 236
5020	75-337	LG 334
5021	75-338	LG 334
5022	75-339	LG 334
5023	75-340	LG 334
50238	33-330	LG 729
50239	33-431	LG 729
5024	75-341	LG 334
5025	75-342	LG 334
5026	75-343	LG 334
5027	75-344	LG 334
5028	75-345	LG 334
5029	75-346	LG 334
5031	75-348	LG 334
5051	75-418	LG 334
5052	75-120	LG 300
5053	75-420	LG 334
5054	75-421	LG 334
5056	75-423	LG 334
5057	75-724	LG 310
5060	75-727	LG 319
5062	75-429	LG 334
5063	75-101	LG 269
5064	75-431	LG 334
5065	75-432	LG 334
5066	75-433	LG 334
5067	75-434	LG 334
5068	75-435	LG 334
5069	75-436	LG 334
5070	75-437	LG 334
5071	75-438	LG 334
5072	75-439	LG 334
5073	75-440	LG 334
5074	75-441	LG 334
5075	75-442	LG 334
5076	75-443	LG 334
5077	75-444	LG 334
5078	75-090	LG 301
5079	75-367	LG 306
5080	75-447	LG 334
5081	75-448	LG 334
5082	75-449	LG 334
5083	75-450	LG 334
5084	75-451	LG 334
5085	75-452	LG 334
5087	75-454	LG 334
5088	75-455	LG 334
5089	75-456	LG 334
5090	75-457	LG 334
5091	75-458	LG 334
5092	75-459	LG 334
5093	75-460	LG 334
5094	75-461	LG 334
5095	75-462	LG 334
5096	75-463	LG 334
5097	75-464	LG 334
5098	75-465	LG 334
5099	75-466	LG 334
5100	75-467	LG 334
5101	75-468	LG 334
5102	75-469	LG 335
5103	75-470	LG 335
5104	75-471	LG 335
5105	75-472	LG 335
5106	75-473	LG 335
5107	75-474	LG 335
5108	75-475	LG 335
5109	75-476	LG 335
5110	75-477	LG 335
5111	75-478	LG 335
5112	75-479	LG 335
5113	75-480	LG 335
5114	75-481	LG 335
5115	75-482	LG 335
5116	75-483	LG 335
5117	75-484	LG 335
5118	75-485	LG 335
5119	75-486	LG 335
5120	75-487	LG 335
5121	75-488	LG 335
5122	75-489	LG 335
5123	75-490	LG 335
5124	75-491	LG 335
5125	75-492	LG 335
5126	75-493	LG 335
5127	75-494	LG 335
5128	75-495	LG 335
5129	75-496	LG 335
5130	75-497	LG 335
5131	75-498	LG 335
5132	75-499	LG 335
5133	75-400	LG 335
5134	73-028	LG 850
5152	75-525	LG 334
5154	75-527	LG 334
5155	75-528	LG 334
5156	75-529	LG 334
5157	75-530	LG 334
5158	75-531	LG 334
5159	75-532	LG 334
5160	75-533	LG 334
5161	75-534	LG 334
5162	75-535	LG 334
5163	75-536	LG 334
5164	75-537	LG 334
5165	75-538	LG 334
5166	75-539	LG 334
5167	75-540	LG 334
5168	75-541	LG 334
5169	75-542	LG 334
5170	75-543	LG 334
5171	75-544	LG 334
5172	75-545	LG 334
5173	75-546	LG 334
5174	75-547	LG 334
5175	75-548	LG 334
5176	75-549	LG 334
5177	75-550	LG 334
5178	75-551	LG 334
5179	75-552	LG 334
5180	75-553	LG 334
5181	75-554	LG 334
5182	75-555	LG 334
5183	75-556	LG 334
5184	75-557	LG 334
5185	75-558	LG 253
5186	75-559	LG 334
5187	75-560	LG 334
5188	75-561	LG 334
5189	75-562	LG 334
5190	75-563	LG 253
5191	75-564	LG 334
5192	75-565	LG 253
5193	75-566	LG 334
5194	75-567	LG 334
5195	75-568	LG 334
5196	75-145	LG 300
5197	75-570	LG 335
5198	75-168	LG 310
5199	75-572	LG 335
5200	75-573	LG 335
5201	75-574	LG 335
5202	75-575	LG 335
5203	75-576	LG 335
5204	75-577	LG 335
5205	75-578	LG 335
5206	75-579	LG 335
5207	75-580	LG 335
5208	75-581	LG 335
5209	75-582	LG 254
5210	75-583	LG 335
5211	75-584	LG 335
5212	75-585	LG 335
5213	75-586	LG 335
5214	75-587	LG 335
5215	75-588	LG 335
5216	75-589	LG 335
5217	75-590	LG 335
5218	75-591	LG 335
5219	75-592	LG 335
5220	75-593	LG 335
5221	75-594	LG 335
5222	75-595	LG 335
5223	75-596	LG 335
5224	75-597	LG 335
5225	75-598	LG 335
5226	75-599	LG 335
5227	75-600	LG 276
5231	75-205	LG 322
5232	75-036	LG 297
5233	75-221	LG 280
5235	75-260	LG 312
5236	75-054	LG 312
5237	75-223	LG 269
5241	75-221	LG 280
5242	75-240	LG 297
5327	75-223	LG 269
5505	73-006	LG 846
5508	73-001	LG 847
5509	73-003	LG 847
5513	73-008	LG 848
5514	73-013	LG 849
5515	73-014	LG 849
5520	73-023	LG 847
5521	73-016	LG 846
5522	73-824	LG 847
5523	73-017	LG 848
5524	73-018	LG 849
55241	75-221	LG 280
5525	73-019	LG 849
5527	73-036	LG 849
5528	73-044	LG 849
5531	73-022	LG 847
5532	73-023	LG 847
5534	43-037	LG 927
5535	67-020	LG 965
5536	73-048	LG 846
5537	73-049	LG 847
5539	73-046	LG 847
5540	80-017	LG 852
5541	80-018	LG 852
5547	84-014	LG 856
5548	67-004	LG 965
5549	80-749	LG 853
5550	67-020	LG 965
5551	67-013	LG 965
5552	67-012	LG 965
5553	67-010	LG 965
5554	67-001	LG 965
5556	67-015	LG 965
5557	67-018	LG 965
5558	67-017	LG 965
5559	67-005	LG 965
5561	67-015	LG 965
5565	67-008	LG 965
5566	73-029	LG 847
5568	73-028	LG 850
5569	67-001	LG 965
5570	67-002	LG 965
5571	67-014	LG 965
5572	67-019	LG 965
5574	67-011	LG 965
5585	73-030	LG 849
5589	73-052	LG 850
5590	73-053	LG 850
5591	73-054	LG 848
5592	73-057	LG 848
5593	73-058	LG 848
5594	73-055	LG 848
5595	73-056	LG 848
5596	73-037	LG 847
5597	73-046	LG 847
5600	80-036	LG 727
5601	80-014	LG 727
5602	80-014	LG 727
5704	04-125	LG 694
5707	48-320	LG 238
5712	34-206	LG 826
5713	45-127	LG 244
5714	34-007	LG 826
5721	45-078	LG 230
5722	82-350	LG 889
5803	41-005	LG 728
5810	31-230	LG 937
5811	32-106	LG 676
5812	45-053	LG 230
5823	75-058	LG 255
5829	49-827	LG 608

ROTARY

PART No.	OREGON	Page
5831	07-007	LG 689
5834	55-236	LG 213
5840	49-282	LG 619
5840	49-885-0	LG 619
5841	07-406	LG 767
5842	07-408	LG 766
5861	30-935	LG 201
5862	30-951	LG 219
5863	30-947	LG 207
5864	55-231	LG 212
5865	75-221	LG 280
5867	75-031	LG 278
5870	78-113	LG 829
5873	72-316	LG 1042
5875	36-022	LG 750
5876	43-403	LG 936
5889	57-003	LG 677
5891	70-349	LG 959
5894	70-343	LG 958
5903	02-041	LG 765
5904	02-040	LG 765
5906	55-242	LG 214
5907	55-241	LG 214
5909	83-283	LG 818
5921	21-265	LG 981
5922	21-280	LG 981
5923	21-295	LG 981
5924	21-205	LG 981
5925	21-230	LG 981
5927	23-395	LG 983
5928	23-380	LG 983
5929	23-331	LG 983
5933	33-334	LG 730
5935	65-208	LG 342
5939	30-924	LG 186
5940	30-112	LG 218
5941	30-107	LG 180
5945	70-316	LG 959
5947	70-326	LG 959
5951	81-102	LG 805
5952	81-101	
5953	82-013	LG 891
5989	78-642	LG 841
5991	78-649	LG 841
5999	82-305	LG 908
6000	07-101	LG 775
6002	94-770	LG 569
6003	98-487	LG 513
6005	98-001	LG 517
6006	98-044	LG 409
6009	91-621	LG 563
6011	191-392	LG 488
6012	91-393	LG 485
6014	91-256	LG 437
6017	97-107	LG 524
6018	97-105	LG 523
6019	98-486	LG 512
6020	91-501	LG 413
6026	91-627	LG 482
6027	97-330	LG 528
6028	98-499	LG 519
6034	97-109	LG 525
6035	91-123	LG 395
6037	95-024	LG 465
6038	95-023	LG 380
6042	98-002	LG 401
6044	90-620	LG 368
6045	90-621	LG 368
6046	90-622	LG 368
6052	90-618	LG 368
6053	90-619	LG 368
6060	91-003	LG 370
6066	91-097	LG 388
6068	91-096	LG 389
6069	91-714	LG 543
6081	91-414	LG 405
6082	91-415	LG 406
6083	91-506	LG 473
6087	91-167	LG 416
6088	91-508	LG 419
6096	98-002	LG 401
6105	95-031	LG 377
6107	40-141	LG 585
6110	99-121	LG 551
6111	97-010	LG 524
6112	97-006	LG 525
6113	97-123	LG 537
6119	97-118	LG 524
6120	95-034	LG 377
6122	91-443	LG 489
6123	95-036	LG 463
6124	195-033	LG 400
6124	95-038	LG 523
6125	195-032	LG 425
6126	98-537	LG 516
6129	97-119	LG 525
6139	98-007	LG 401
6143	98-496	LG 515
6144	97-005	LG 527
6145	97-004	
6146	97-003	
6162	97-008	LG 526
6166	97-014	LG 527
6167	91-127	LG 396
6167	91-547	LG 449
6168	91-127	LG 396
6169	91-919	LG 576
6170	91-920	LG 576
6171	91-254	LG 456
6172	40-121	LG 584
6173	91-417	LG 500
6174	97-001	LG 527
6175	91-368	LG 460
6178	91-218	LG 420
6180	91-253	LG 415
6184	94-032	LG 568
6185	91-126	LG 548
6186	91-403	LG 488
6189	195-005	LG 373
6190	195-003	LG 400
6192	91-380	LG 538
6196	95-018	LG 399
6205	95-006	LG 397
6206	91-381	LG 483
6208	91-433	LG 498
6209	91-438	LG 500
6210	91-764	LG 579
6212	98-005	LG 521
6218	95-047	LG 378
6221	91-384	LG 487
6223	91-383	LG 484
6224	91-508	LG 419
6235	95-051	LG 465
6236	195-021	LG 468
6237	91-332	LG 412
6238	91-329	LG 409
6239	91-440	LG 408
6240	91-056	LG 406
6248	690-617-0	LG 368
6250	91-188	LG 439
6251	94-019	LG 570
6252	91-395	LG 493
6253	91-394	LG 489
6254	191-015	LG 372
6255	91-395	LG 493
6256	91-127	LG 396
6261	40-142	LG 584
6262	195-048	LG 430
6263	95-049	LG 459
6264	95-050	LG 461
6265	91-436	LG 498
6269	91-217	LG 558
6270	94-029	LG 414
6271	94-040	LG 573
6272	93-013	LG 480
6276	40-840	LG 588
6279	40-703	LG 590
6285	91-239	LG 454
6290	91-311	LG 439
6291	91-335	LG 420
6294	96-344	LG 536
6296	96-310	LG 444
6296	96-321	LG 436
6297	96-630	LG 556
6298	96-323	LG 477
6299	96-347	LG 387
6300	96-308	LG 456
6301	96-633	LG 556
6302	96-628	LG 528
6303	96-319	LG 415
6308	96-600	LG 569
6309	96-329	LG 449
6310	96-309	LG 488
6311	96-346	LG 449
6312	96-303	LG 416
6315	96-306	LG 538
6316	396-714	LG 413
6317	96-620	LG 551
6323	91-535	LG 448
6326	94-061	LG 561
6328	91-399	LG 493
6401	91-547	LG 449
6402	91-544	LG 397
6403	91-533	LG 394
6404	91-507	LG 415
6405	91-259	LG 432
6408	97-017	LG 537
6410	94-618	LG 506
6415	96-343	LG 395
6421	96-309	LG 488
6422	96-900	LG 526
6423	198-049	LG 518
6424	98-051	LG 521
6425	98-050	LG 521
6426	99-617	LG 395
6430	91-517	LG 457
6431	91-516	LG 457
6432	91-761	LG 578
6434	91-766	LG 579
6437	95-045	LG 374
6438	98-066	LG 409
6439	98-068	LG 389
6441	91-509	LG 424
6448	98-065	LG 515
6450	98-098	LG 410
6460	97-601	LG 527
6467	91-762	LG 578
6470	97-018	LG 523
6471	97-001	LG 527
6475	97-024	LG 525
6477	40-139	LG 584
6479	91-078	LG 490
6480	91-138	LG 488
6481	91-374	LG 442
6491	97-606	LG 522
6495	95-052	LG 398
6496	96-394	LG 538
6500	99-127	LG 375
6501	75-111	LG 306
6502	75-026	LG 307
6503	75-038	LG 307
6505	75-045	LG 307
6507	75-057	LG 307
6508	75-061	LG 307
6509	75-063	LG 307
6515	30-141	LG 217
6517	30-937	LG 202
6518	30-305	LG 198
6519	30-936	LG 202
6521	49-160	LG 747
6524	30-917	LG 186
6534	45-031	LG 232
6535	45-256	LG 224
6541	58-088	LG 959
6545	33-387	LG 945
6553	30-116	LG 219
6567	30-303	LG 198
6568	49-839	LG 613
6571	71-110	LG 956
6572	78-026	LG 822
6572	78-300	LG 833
6573	45-010	LG 238
6581	48-135	LG 694
6593	07-304	LG 770
6594	58-300	LG 963
6600	83-282	LG 817
6601	30-736	LG 185
6603	30-184	LG 186
6604	30-134	LG 180
6605	30-085	LG 203
6606	30-942	LG 206
6608	78-678	LG 835
6616	07-155	LG 761
6617	07-153	LG 761

2019 Aftermarket X-Reference

ROTARY

PART No.	OREGON	Page
6618	07-151	LG 761
6619	07-152	LG 761
6620	07-150	LG 761
6626	65-221	LG 341
6627	71-418	LG 957
6657	60-860	LG 701
6658	60-160	LG 701
6659	30-758	LG 209
6676	83-028	LG 817
6677	83-283	LG 818
6680	83-300	LG 819
6681	83-301	LG 816
6684	30-187	LG 192
6684	30-401	LG 193
6688	30-403	LG 192
669	75-508	LG 319
6690	30-404	LG 192
6691	30-506	LG 195
6692	30-406	LG 193
6693	30-934	LG 195
6694	30-410	LG 220
6694	55-983	LG 992
6697	30-924	LG 186
6698	30-412	LG 220
670	75-353	LG 319
6700	30-413	LG 221
6702	30-414	LG 221
6704	30-418	LG 221
6705	30-309	LG 199
6706	30-311	LG 199
6710	33-208	LG 866
673	175-068	LG 318
673	75-068	LG 318
6737	91-400	LG 488
675	175-073	LG 319
675	75-073	LG 319
6757	36-102	LG 750
6758	36-104	LG 750
6762	40-951	LG 587
6766	91-146	LG 419
6780	31-904	LG 930
6781	33-186	LG 789
6783	45-118	LG 760
6785	90-669	LG 420
6788	40-010	LG 588
6790	91-505	LG 477
6793	65-230	LG 342
6813	82-678	LG 904
6815	42-080	LG 742
6816	42-081	LG 742
6820	91-373	LG 383
6821	91-369	LG 434
6832	70-363	LG 963
6833	91-515	LG 415
6837	75-165	LG 322
6838	75-016	LG 301
6839	175-002	LG 301
6839	75-002	LG 301
684	84-006	LG 675
6840	75-281	LG 301
6841	75-018	LG 301
6842	175-029	LG 303
6842	75-029	LG 253
6843	175-021	LG 274
6843	75-021	LG 274
6844	75-035	LG 302
6845	175-028	LG 302
6845	75-028	LG 302
6863	45-107	LG 245
6871	31-912	LG 929
6876	75-112	LG 306
6880	51-000	LG 727
6885	09-808	LG 697
6886	09-803	LG 697
6890	85-008	LG 909
6893	49-826	LG 606
6901	75-107	LG 254
6902	175-171	LG 261
6902	75-171	LG 289
6903	75-022	LG 307
6904	175-041	LG 307
6904	75-041	LG 255
6906	175-012	LG 301
6906	75-012	LG 301
6907	75-009	LG 301
6908	175-119	LG 302
6908	75-119	LG 302
6915	72-306	LG 1038
6916	72-094	LG 1042
6918	72-307	LG 1038
6925	98-600	LG 85
6929	83-013	LG 817
6930	51-222	LG 727
6949	75-023	LG 302
6950	75-091	LG 302
6952	75-142	LG 310
6953	71-107	LG 957
6954	71-106	LG 957
6969	75-212	LG 268
6970	75-179	LG 310
6985	55-227	LG 191
6986	55-231	LG 212
6989	30-938	LG 202
6991	30-959	LG 219
7003	55-550	LG 992
7004	55-551	LG 992
7010	95-058	LG 458
7015	33-376	LG 942
7018	76-070-0	LG 726
7023	58-397	LG 958
7023	70-397	LG 958
7025	70-317	LG 959
7026	70-321	LG 960
7027	70-329	LG 960
7028	70-328	LG 959
7029	70-335	LG 959
7030	70-338	LG 959
7031	70-349	LG 959
7033	70-351	LG 959
7035	30-023	LG 205
7036	30-713	LG 221
7038	30-419	LG 221
7040	30-418	LG 221
7042	30-317	LG 194
7044	30-318	LG 193
7046	30-316	LG 208
7050	30-953	LG 211
7050	30-974	LG 188
7051	30-960	LG 187
7052	30-939	LG 202
7081	56-019	LG 772
7083	56-018	LG 690
7094	30-049	LG 181
7095	30-925	LG 187
7119	65-228	LG 341
7124	78-673	LG 839
7125	48-202	LG 694
7126	34-820	LG 833
7126	34-822	LG 832
7127	34-824	LG 832
7128	75-136	LG 309
714	34-011	LG 821
7141	55-460-1	LG 1026
7144	71-417	LG 957
7145	71-415	LG 956
7146	71-406	LG 956
7147	71-003	LG 956
715	34-001	LG 821
7154	85-011	LG 909
7155	82-500	LG 893
7156	82-501	LG 894
7157	78-043	LG 824
7158	76-110	LG 726
7159	55-110	LG 765
7162	45-018	LG 247
7164	30-968	LG 222
7168	49-170	LG 758
7176	78-023	LG 822
7178	45-220	LG 232
7179	33-391	LG 945
718	34-002	LG 821
7180	44-370	LG 834
7182	34-820	LG 833
7183	75-143	LG 310
7184	75-936	LG 290
719	34-005	LG 821
720	34-006	LG 821
7201	70-340	LG 959
7202	70-339	LG 959
7209	30-953	LG 211
721	34-009	LG 821
7210	45-257	LG 245
7213	36-001	
7214	30-048	LG 182
7215	49-843	LG 612
7216	49-281	LG 613
7216	49-843	LG 612
722	34-012	LG 821
723	34-015	LG 821
7233	55-120	LG 770
7234	49-185	LG 752
7239	35-033	LG 809
724	34-017	LG 821
7241	45-037	LG 242
7245	75-065	LG 307
7246	49-115	LG 746
7248	49-110	LG 746
725	34-018	LG 821
7250	75-902	LG 331
7251	82-020	LG 903
7255	49-018	LG 728
7258	45-043	LG 243
7259	07-004	LG 769
726	34-019	LG 821
7260	71-407	LG 956
7261	71-004	LG 956
7261	71-409	LG 956
7262	45-188	LG 230
727	34-020	LG 821
7279	45-128	LG 228
728	34-034	LG 821
7280	33-394	LG 944
7282	85-012	LG 909
7286	33-344	LG 784
7287	33-342	LG 784
7288	33-340	LG 784
729	34-031	LG 821
7290	31-004	LG 929
7293	07-010	LG 764
7298	07-109	LG 778
730	34-033	LG 821
7301	31-914	LG 930
731	34-034	LG 821
732	34-035	LG 821
7327	31-909	LG 928
7328	58-302	LG 959
733	34-037	LG 821
734	78-029	LG 831
736	34-810	LG 725
7408	55-017	LG 772
7417	44-341	LG 839
7429	75-324	LG 334
7430	75-325	LG 334
7431	75-326	LG 334
7432	75-327	LG 334
7433	75-328	LG 334
7434	75-329	LG 334
7435	75-330	LG 334
7436	75-331	LG 334
7437	75-332	LG 334
7438	75-333	LG 334
7439	75-334	LG 334
7440	75-335	LG 334
7441	75-336	LG 334
7442	75-337	LG 334
7443	75-338	LG 334
7444	75-339	LG 334
7445	75-340	LG 334
7446	75-341	LG 334
7447	75-342	LG 334
7448	75-343	LG 334
7449	75-344	LG 334
7450	75-345	LG 334
7451	75-346	LG 334
7453	75-348	LG 334
7454	75-349	LG 334
7455	75-350	LG 334
7466	75-423	LG 334
7467	75-424	LG 334
7468	75-425	LG 334
7469	75-426	LG 334
7470	75-427	LG 334
7471	75-428	LG 334
7472	75-429	LG 334

X

ROTARY

PART No.	OREGON	Page
7474	75-431	LG 334
7475	75-432	LG 334
7476	75-433	LG 334
7477	175-913	LG 262
7477	75-434	LG 334
7478	75-435	LG 334
7479	75-436	LG 334
7480	75-437	LG 334
7481	75-438	LG 334
7482	75-439	LG 334
7483	75-440	LG 334
7484	75-441	LG 334
7485	75-442	LG 334
7486	75-443	LG 334
7487	75-444	LG 334
7488	75-445	LG 334
7489	75-446	LG 334
7490	75-447	LG 334
7491	75-448	LG 334
7492	75-449	LG 334
7493	75-450	LG 334
7494	75-451	LG 334
7495	75-452	LG 334
7496	75-453	LG 334
7497	75-454	LG 334
7498	75-455	LG 334
7499	75-456	LG 334
750	44-301	LG 840
7500	75-457	LG 334
7501	75-458	LG 334
7502	75-459	LG 334
7503	75-460	LG 334
7504	75-461	LG 334
7505	75-462	LG 334
7506	75-463	LG 334
7507	75-464	LG 334
7508	75-465	LG 334
7509	75-466	LG 334
7510	75-467	LG 334
7511	75-468	LG 334
7512	75-469	LG 335
7513	75-470	LG 335
7514	75-471	LG 335
7515	75-472	LG 335
7516	75-473	LG 335
7517	75-474	LG 335
7518	75-475	LG 335
7519	75-476	LG 335
752	44-306	LG 840
7520	75-477	LG 335
7521	75-478	LG 335
7522	75-479	LG 335
7523	75-480	LG 335
7524	75-481	LG 335
7525	75-482	LG 335
7526	75-483	LG 335
7527	75-484	LG 335
7528	75-485	LG 335
7529	75-486	LG 335
7530	75-487	LG 335
7531	175-099	LG 262
7531	75-488	LG 335
7532	75-489	LG 335
7533	75-490	LG 335
7534	75-491	LG 335
7535	75-492	LG 335
7536	75-493	LG 335
7537	75-494	LG 335
7538	75-495	LG 335
7539	75-496	LG 335
7540	75-497	LG 335
7541	75-498	LG 335
7542	75-499	LG 335
7543	75-400	LG 335
7544	75-401	LG 335
7545	75-402	LG 335
7546	75-403	LG 256
7547	75-404	LG 335
7548	75-405	LG 335
7549	75-406	LG 335
7550	75-407	LG 335
7551	75-408	LG 335
7552	75-409	LG 335
7553	75-410	LG 335
7554	75-411	LG 335
7555	75-412	LG 335
7556	75-413	LG 335
7557	75-414	LG 335
756	44-310	LG 840
7570	75-525	LG 334
7572	75-527	LG 334
7573	75-528	LG 334
7574	75-529	LG 334
7575	75-530	LG 334
7576	75-531	LG 334
7577	75-532	LG 334
7578	75-533	LG 334
7579	75-534	LG 334
758	44-312	LG 840
7580	75-535	LG 334
7581	75-536	LG 334
7582	75-537	LG 334
7583	75-538	LG 334
7584	75-539	LG 334
7585	75-540	LG 334
7586	75-541	LG 334
7587	75-542	LG 334
7588	75-543	LG 334
7589	75-544	LG 334
759	44-313	LG 840
7590	75-545	LG 334
7591	75-546	LG 334
7592	75-547	LG 334
7593	75-548	LG 334
7594	75-549	LG 334
7595	75-550	LG 334
7596	75-551	LG 334
7597	75-552	LG 334
7598	75-553	LG 334
7599	75-554	LG 334
7600	75-555	LG 334
7601	75-556	LG 334
7602	75-557	LG 334
7603	75-558	LG 253
7604	75-559	LG 334
7605	75-560	LG 334
7606	75-561	LG 334
7607	75-562	LG 334
7608	75-563	LG 253
7609	75-564	LG 334
7610	75-565	LG 253
7611	75-566	LG 334
7612	75-567	LG 334
7613	75-568	LG 334
7614	75-569	LG 335
7615	75-570	LG 335
7616	75-571	LG 335
7617	75-572	LG 335
7618	75-573	LG 335
7619	75-574	LG 335
762	44-316	LG 840
7620	75-575	LG 335
7621	75-576	LG 335
7622	75-577	LG 335
7623	75-578	LG 335
7624	75-579	LG 335
7625	75-580	LG 335
7626	75-581	LG 335
7627	75-582	LG 254
7628	75-583	LG 335
7629	75-584	LG 335
7630	75-585	LG 335
7631	75-586	LG 335
7632	75-587	LG 335
7633	75-588	LG 335
7634	75-589	LG 335
7635	75-590	LG 335
7636	75-591	LG 335
7637	75-592	LG 335
7638	75-593	LG 335
7639	75-594	LG 335
764	44-318	LG 840
7640	75-595	LG 335
7641	75-596	LG 335
7642	75-597	LG 335
7643	75-598	LG 335
7644	75-599	LG 335
7645	75-500	LG 335
7648	75-503	LG 256
765	44-319	LG 840
767	44-321	LG 840
7672	75-001	LG 308
7673	75-152	LG 308
7675	33-384	LG 947
768	44-322	LG 840
7680	84-012	LG 675
7681	84-013	LG 675
769	44-348	LG 840
7694	70-301	LG 959
7695	70-338	LG 959
7696	70-355	LG 959
7712	30-417	LG 193
7713	30-400	LG 193
7714	30-313	LG 201
7716	45-023	LG 249
772	44-351	LG 840
7720	45-095	LG 855
7721	49-007	LG 622
7723	31-907	LG 929
7726	30-933	LG 195
7730	07-392	LG 767
7732	30-024	LG 218
774	44-353	LG 840
7746	30-952	LG 219
7765	82-250	LG 902
7766	73-020	LG 850
7769	04-009	LG 686
777	78-046	LG 826
7771	56-011	LG 687
7773	56-008	LG 687
7777	55-111	LG 1026
7781	49-127	LG 746
7785	30-944	LG 207
7787	48-145	LG 698
7789	75-154	LG 312
7790	75-055	LG 255
7791	75-043	LG 312
7801	49-157	LG 759
7804	33-399	LG 944
7810	65-220	LG 340
7811	71-102	LG 956
7812	60-786	LG 719
7813	34-020	LG 821
7813	78-020	LG 825
7821	71-410	LG 956
7822	71-412	LG 956
7825	71-411	LG 956
7828	71-100	LG 956
7836	45-100	LG 239
7838	175-073	LG 319
7838	75-073	LG 319
7841	30-456	LG 201
7847	78-103	LG 823
7850	78-102	LG 823
7851	78-101	LG 249
7852	78-100	LG 249
7854	41-922	LG 1014
7855	41-923	LG 1014
7856	41-935	LG 1014
7857	41-937	LG 1014
7858	41-927	LG 1014
7859	41-929	LG 1014
7862	41-924	LG 1014
7863	41-925	LG 1014
7864	55-092	LG 768
7867	35-027	LG 807
7877	30-735	LG 181
7879	30-108	LG 180
7880	30-028	LG 182
7882	55-109	LG 773
7883	55-102	LG 773
7885	80-745	LG 728
7897	55-995	
7913	75-720	LG 270
7915	75-221	LG 280
7916	83-284	LG 818
7918	34-107	LG 823
7922	33-410	LG 947
7928	55-121	LG 1024
7929	55-253	LG 1024
7932	55-097	LG 772
7933	55-139	LG 763
7934	33-337	LG 730
7935	33-335	LG 730

2019 Aftermarket X-Reference

PART No.	OREGON	Page
ROTARY		
7937	78-021	LG 832
7941	49-109	LG 748
7943	49-123	LG 746
7949	30-926	LG 187
7950	45-000	LG 237
7952	75-060	LG 322
7961	60-400	LG 700
7963	49-067	LG 748
7966	49-095	LG 746
7968	49-989	LG 602
7974	60-426	LG 699
7975	60-426	LG 699
7976	33-023	LG 949
7978	34-826	LG 833
7978	78-027	LG 832
7979	30-932	LG 196
7980	30-165	LG 204
7980	30-709	LG 194
7983	34-100	LG 830
7986	44-340	LG 838
7991	44-341	LG 839
7993	44-342	LG 839
7995	44-343	LG 841
7997	30-416	LG 214
7998	07-107	LG 774
7998	07-112	LG 774
7999	55-122	LG 770
8001	35-006	LG 808
8003	35-022	LG 807
8005	34-009	LG 821
8006	70-361	LG 958
8007	70-356	LG 958
8051	33-345	LG 784
8071	43-509	LG 936
8077	48-211	LG 233
8083	70-147	LG 960
8084	70-379	LG 963
8087	33-031	LG 742
8088	33-033	LG 742
8089	33-035	LG 742
8092	75-552	LG 334
8098	72-795	LG 1044
8112	49-023	LG 629
8121	55-342	LG 627
8122	55-343	LG 627
8123	55-333	LG 633
8124	55-334	LG 633
813	45-205	LG 228
8134	49-262	LG 621
814	45-002	LG 237
8161	55-332	LG 633
8187	82-308	LG 874
8190	09-804	LG 233
8198	45-242	LG 243
8201	72-309	LG 1042
8207	51-013	LG 725
8208	53-001	LG 623
8216	72-099	LG 1040
8219	55-903	
8221	55-804-1	LG 994
8224	72-129	LG 1041
8225	49-132	LG 749
8226	49-129	LG 745
8227	49-213	LG 623
8228	49-114	LG 746
8235	30-088	LG 203
8238	55-611	LG 192
8240	48-320	LG 238
8242	50-545	LG 748
8243	50-546	LG 748
8244	72-098	LG 1040
8248	48-051	LG 725
8255	49-038	LG 628
8260	49-877	LG 613
8261	49-875	LG 612
8264	70-701	LG 964
8278	72-728	LG 1044
8279	30-025	LG 208
828	58-063	LG 959
8285	07-314	LG 773
8286	43-014	LG 932
8287	55-811	LG 933
8288	55-800	LG 934
8289	55-820	LG 935
8295	82-100	LG 802
8298	72-100	
8299	72-322	LG 1041
8300	72-323	LG 1041
8305	45-127	LG 244
8320	45-250	LG 243
8323	04-006-0	LG 686
8324	04-007	LG 686
8327	30-019	LG 208
8328	30-026	LG 208
8329	30-089	LG 204
8330	30-740	LG 218
8332	30-102	LG 220
8340	49-834	LG 611
8341	49-833	LG 611
8342	49-832	LG 611
8343	04-125	LG 694
8351	45-012	LG 224
8364	49-001	LG 622
8365	49-017	LG 760
837	58-150	LG 960
8372	48-141	LG 249
8373	34-039	LG 834
8377	72-800	LG 1047
8380	49-008	LG 623
8386	07-157	LG 761
8388	41-926	LG 1014
8390	41-928	LG 1014
8391	41-936	LG 1014
8397	56-001	LG 687
8398	56-002	LG 687
8399	56-003	LG 687
8406	49-050	LG 954
8407	49-051	LG 954
8409	48-009	LG 697
8413	50-543	LG 748
8414	49-119	LG 746
8415	46-300	LG 717
8425	75-084	LG 265
8426	75-336	LG 334
8427	75-439	LG 334
8428	75-096	LG 265
8429	75-333	LG 334
8431	75-117	LG 265
8432	75-098	LG 251
8437	45-130	LG 232
8442	75-103	LG 308
8443	75-151	LG 308
8444	75-094	LG 252
8445	45-007	LG 853
8446	45-006	LG 249
845	91-398	LG 488
8456	70-315	LG 960
8457	70-314	LG 959
8458	41-930	LG 1014
8459	41-931	LG 1014
8460	41-932	LG 1014
8461	41-933	LG 1014
8462	75-163	LG 261
8463	75-097	LG 289
8465	75-108	LG 289
8476	48-320	LG 238
8478	34-021	LG 833
8479	82-225	LG 871
8480	30-450	LG 189
8481	30-927	LG 187
8482	30-038	LG 187
8483	30-928	
8487	84-027	LG 675
8488	45-225	LG 232
849	92-011	LG 490
8490	30-930	LG 187
8491	33-032	LG 742
8498	33-005	LG 927
8505	30-457	LG 202
8507	45-257	LG 245
851	91-804	LG 560
8510	75-218	LG 316
8511	75-106	LG 261
8514	58-110	LG 960
8516	175-099	LG 262
8516	75-099	LG 262
8518	55-821	LG 988
852	43-011	LG 935
8521	55-816	LG 988
8525	45-004	LG 235
8526	55-132	LG 773
853	45-083	LG 246
8530	60-420	LG 717
8532	55-118	LG 630
8533	55-119	LG 764
8534	55-112	LG 778
8535	07-011	LG 763
854	45-081	LG 249
8540	70-308	LG 959
8541	70-330	LG 959
8542	58-072	LG 959
8547	78-690	LG 840
8548	82-220	LG 871
8549	85-017	LG 907
855	72-109	LG 1037
8550	72-795	LG 1044
8552	72-723	LG 1043
8568	46-302	LG 709
8570	55-186	LG 1027
8585	30-931	LG 191
8586	48-007	LG 1039
8588	34-014	LG 831
859	35-026	LG 807
8591	49-307	LG 625
8593	33-500-0	LG 744
8596	47-689	LG 743
8597	47-051	LG 744
8598	47-050	LG 744
860	43-012	LG 927
8601	33-393	LG 943
8602	34-041	LG 831
8610	84-102	LG 954
8611	84-103	LG 954
8620	84-101	LG 954
8627	80-743	LG 852
8628	80-746	LG 852
863	81-012	LG 802
863	81-013	LG 802
8631	83-012	LG 819
8635	73-030	LG 849
8636	58-398	LG 959
864	84-006	LG 675
8645	07-266	LG 761
8647	82-495	LG 870
8648	82-680	LG 870
8649	82-679	LG 870
865	84-009	LG 675
8657	44-100	LG 837
866	60-009	LG 709
8660	79-000	LG 802
8662	30-037	LG 199
867	60-188	LG 718
8675	07-404	LG 766
8678	07-390	LG 766
8679	07-391	LG 766
868	07-403	LG 766
8687	70-380	LG 958
8688	70-357	LG 958
869	75-354	LG 319
8692	33-343	LG 787
8693	33-346	LG 786
8694	71-109	LG 956
8694	71-401	LG 956
870	175-105	LG 319
870	75-105	LG 319
8712	30-943	LG 206
8713	55-510	LG 212
8714	75-044	LG 313
8716	30-956	LG 216
872	72-420	LG 1047
8720	40-707	LG 590
8721	73-561	LG 843
8733	75-144	LG 284
8735	55-201	LG 190
8737	55-018	LG 771
8746	49-069	LG 746
8747	75-122	LG 307
875	43-100	LG 932
8750	55-186	LG 1027
8751	49-034	LG 630
8752	65-006	LG 340
8753	65-007	LG 342
8755	41-008	LG 590
876	43-200	LG 932

ROTARY

PART No.	OREGON	Page
8761	75-123	LG 300
8765	60-428	LG 720
8771	33-341	LG 784
878	71-511	LG 956
8781	75-196	LG 290
8784	75-167	LG 289
8785	30-030	LG 218
8786	33-053	LG 789
8789	49-413	LG 749
879	58-001	LG 961
8796	45-013	LG 853
8797	49-031	LG 746
880	71-274	LG 956
8803	75-180	LG 254
8805	75-113	LG 281
8809	75-130	LG 269
8810	75-095	LG 268
8811	75-125	LG 269
8814	30-762	LG 183
8815	30-029	LG 181
8825	49-204	LG 749
8828	73-031	LG 850
8829	34-032	LG 834
883	58-064	LG 959
8831	45-242	LG 243
884	71-250	LG 956
8861	45-243	LG 243
8869	45-255	LG 224
8869	45-267	LG 235
8887	75-938	LG 250
8888	70-377	LG 960
8896	70-142	LG 958
8897	33-034	LG 742
8898	76-073-0	LG 726
8899	07-024	LG 771
8903	30-027	LG 194
8904	30-452	LG 195
8906	30-015	LG 194
891	35-021	LG 810
8915	70-376	LG 958
8918	70-375	LG 958
8919	70-358	LG 958
892	35-004	LG 806
8926	49-308	LG 625
8934	07-317	LG 771
8935	07-309	LG 772
8936	07-309	LG 772
8938	80-748	LG 852
8939	70-333	LG 963
8943	33-336	LG 730
8950	76-100	LG 939
8951	49-412	LG 745
8952	49-831	LG 612
8953	02-403	LG 790
8955	02-406	LG 790
8958	49-058	LG 768
8959	49-079	LG 768
8961	60-427	LG 717
8965	44-368	LG 837
8966	30-945	LG 207
8967	82-502	LG 894
8968	82-503	LG 895
8969	33-401	LG 732
8972	175-135	LG 308
8972	75-135	LG 308
8977	57-017	LG 677
8979	86-019	LG 781
898	71-104	LG 956
8984	45-040	LG 249
8985	48-006	LG 694
899	71-098	LG 956
8993	73-026	LG 851
8998	45-060	LG 234
8999	45-015	LG 233
900	71-097	LG 956
9000	45-014	LG 225
9014	75-188	LG 256
9016	75-186	LG 281
9024	07-214	LG 779
9025	07-219	LG 779
9026	55-008	LG 771
903	58-011	LG 957
9044	45-022	LG 243
9045	55-813	LG 933
9046	73-025	LG 855
9048	55-122	LG 770
9064	31-020	LG 923
9065	31-910	LG 929
9066	30-003	LG 190
9067	30-009	LG 190
9078	72-024	LG 1035
908	58-131	LG 960
9091	42-552	
9108	75-910	LG 331
9114	31-911	LG 929
9119	75-159	LG 303
9120	75-161	LG 255
9122	73-100	LG 850
9131	60-012-0	LG 712
9133	46-323	LG 712
9134	46-319	LG 712
9135	60-184	LG 720
9137	07-208	LG 779
9138	07-209	LG 779
9139	07-210	LG 779
9140	07-211	LG 779
9142	06-003	LG 805
9143	06-004	LG 805
9145	44-364	LG 728
9146	07-104	LG 776
9147	07-011	LG 763
9148	44-371	LG 834
9153	82-325	LG 903
9154	70-353	LG 958
9157	21-555	LG 981
9158	33-397	LG 942
9159	45-132	LG 939
916	80-740	LG 852
9160	45-404	LG 234
9166	33-398	LG 944
9167	30-761	LG 183
9168	30-033	LG 183
917	80-741	LG 852
9170	95-045	LG 374
9170	95-052	LG 398
9171	91-503	LG 424
918	80-742	LG 852
9185	70-365	LG 961
9186	70-366	LG 961
9187	70-367	LG 961
9188	70-368	LG 961
9189	70-370	LG 961
9190	70-373	LG 961
9199	49-270	LG 619
9200	30-031	LG 218
9201	58-399	LG 960
9204	33-402	LG 731
9206	33-414	LG 741
9207	33-415	LG 741
9219	33-761	LG 926
9224	55-741	LG 1019
9227	07-213	LG 777
9229	96-344	LG 536
9244	49-817-0	LG 616
9244	49-864	LG 616
9245	30-944	LG 207
9257	75-177	LG 281
9261	50-412	LG 745
9268	05-070	LG 914
9273	30-032	LG 182
9284	82-512	LG 895
9285	82-511	LG 895
9286	82-515	LG 896
9287	82-516	LG 896
9288	82-513-2	LG 896
9289	49-085	LG 769
9292	30-329	LG 202
9293	33-347	LG 784
9294	07-125	LG 766
9297	49-865	LG 616
9298	49-866	LG 617
9299	55-069-0	LG 993
9300	55-069-0	LG 993
9303	45-003	LG 244
9304	30-914	LG 187
9307	45-303	LG 804
9311	45-300	LG 804
9313	75-129	LG 255
9325	70-349	LG 959
9327	45-113	LG 242
9330	33-396	LG 944
9331	33-392	LG 944
9332	21-155	LG 981
9336	175-000	LG 262
9336	75-000	LG 262
9341	31-140	LG 937
9342	31-642	LG 937
9343	31-650	LG 937
9344	31-152	LG 937
9345	31-160	LG 937
9353	33-762-0	LG 926
9358	33-244	LG 786
9361	83-010	LG 819
9362	33-003	LG 926
9363	33-007	LG 926
9367	175-195	LG 289
9367	75-195	LG 254
9368	175-169	LG 290
9368	75-169	LG 290
9369	33-317-0	LG 729
9370	33-200	LG 866
9375	82-320	LG 874
9376	34-046	LG 824
9377	78-065	LG 832
9380	83-011	LG 819
9383	55-069-0	LG 993
9397	78-680	LG 840
9477	49-026	LG 769
9478	49-020	LG 631
9479	49-027	LG 769
9480	75-675	LG 303
9482	75-118	LG 302
9487	91-313	LG 494
9488	31-063	LG 932
9495	58-360	LG 958
9496	55-326	LG 1021
9500	70-409	LG 960
9506	30-322	LG 200
9508	44-500	LG 840
9514	44-331	LG 841
9518	85-049	LG 906
9519	82-510	LG 872
9520	85-023	LG 907
9521	82-221	LG 872
9527	43-425	LG 936
9533	30-142	LG 217
9542	78-055	LG 833
9543	78-049	LG 833
9544	78-129	LG 830
9549	70-362	LG 958
9550	30-075	LG 185
9565	81-012	LG 802
9566	46-325	LG 701
9570	75-024	LG 302
9575	85-034	LG 908
9577	35-038	LG 808
9581	75-109	LG 303
9583	30-055	LG 204
9584	30-054	LG 200
9585	30-527	LG 202
9587	44-369	LG 837
9589	44-101	LG 837
9591	30-309	LG 199
9592	30-915	LG 187
9594	19-003	LG 983
9595	19-002	LG 983
9596	19-005	LG 983
9597	19-001	LG 983
9600	78-003	LG 839
9603	07-319	LG 771
9604	55-126	LG 771
9607	55-157	LG 763
9608	55-249	LG 215
9609	55-245	LG 215
9611	30-940	LG 202
9614	30-331	LG 203
9617	55-158	LG 934
9618	71-096	LG 956
9618	71-610	LG 956
9620	71-276	LG 956
9621	71-096	LG 956
9622	33-024	LG 945
9623	33-383	LG 944
9627	30-148	LG 198

2019 Aftermarket X-Reference

PART No.	OREGON	Page
ROTARY		
965	69-262-0	
9652	55-124	LG 771
9655	33-074	LG 944
9656	33-081	LG 946
9656	33-093	LG 946
9657	33-002	LG 946
9658	33-027	LG 947
9659	33-028	LG 947
9660	33-015	LG 948
9661	33-084	LG 948
9662	33-085	LG 948
9664	33-019	LG 948
9665	33-026	LG 947
9679	60-000	LG 702
9680	60-004	LG 701
9681	60-002	LG 710
9682	60-124	LG 710
9683	60-003	LG 710
9685	60-006	LG 716
9686	55-255	LG 1019
9687	55-256	LG 1019
9693	60-125	LG 718
9694	46-416	LG 718
9697	175-197	LG 290
9697	75-197	LG 262
9698	175-170	LG 290
9698	75-170	LG 290
9711	70-364	LG 961
9712	75-266	LG 254
9713	75-210	LG 309
9714	75-267	LG 309
9715	75-964	LG 309
9717	05-001	LG 913
9728	30-056	LG 208
9731	50-414	LG 751
9732	50-419	LG 751
9744	70-372	LG 961
9745	45-073	LG 227
9765	75-889	LG 252
977	90-142	LG 368
9772	78-005	LG 823
9776	55-244	LG 215
978	90-143	LG 368
9782	50-416	LG 751
9783	50-417	LG 751
9784	50-418	LG 751
9785	50-556	LG 753
9786	50-554	LG 753
979	90-144	LG 368
9790	30-066	
9796	33-700	LG 915
9797	33-771	LG 916
9798	33-708	LG 915
9798	33-778	LG 915
9799	33-709	LG 916
980	90-145	LG 368
9800	33-702	LG 919
9802	33-704	LG 919
9802	33-774	LG 919
9807	49-231	LG 630
981	90-146	LG 368
9810	195-067	LG 380
9814	33-707	LG 920
9814	33-777	LG 920
9815	80-145	LG 341
9816	42-081	LG 742
9826	36-521	LG 755
9827	36-522	LG 755
9829	36-523	LG 755
9830	36-325	LG 755
9831	36-326	LG 755
9832	36-140	LG 755
9833	36-141	LG 755
9834	36-142	LG 755
9837	36-143	LG 755
9838	50-553	LG 752
9841	30-018	LG 198
9843	50-415	LG 751
9844	78-007	LG 833
9847	75-160	LG 303
9848	175-164	LG 262
9848	75-164	LG 262
9849	34-049	LG 824
9852	30-321	LG 199
9853	33-399	LG 944
9854	33-006	LG 927
9855	60-014	LG 712
9861	75-066	LG 251
9862	75-960	LG 257
9863	75-234	LG 281
9864	78-011	LG 827
9865	78-048	LG 833
9875	72-450	LG 1037
9881	70-302	LG 959
9883	96-341	LG 446
9884	96-327	LG 417
9885	94-615	LG 370
9888	70-392	LG 961
9891	78-009	LG 827
9895	78-010	LG 827
9896	97-012	LG 537
9897	97-013	LG 526
9900	75-079	LG 301
9901	75-339	LG 334
9903	175-824	LG 274
9903	75-824	LG 274
9906	85-028	LG 908
9907	195-062	LG 376
9909	30-068	LG 212
9910	33-110	LG 735
9911	33-112	LG 735
9912	33-111	LG 735
9913	33-113	LG 740
9928	55-247	LG 214
9931	33-038	LG 742
9932	75-674	LG 303
9935	75-361	LG 254
9945	75-194	LG 289
9947	72-741	LG 1046
9948	07-084	LG 768
9948	49-028	LG 769
9953	30-347	LG 194
9959	91-449	LG 492
9962	73-039	LG 846
9964	75-898	LG 262
9966	70-369	LG 961
9970	95-614	LG 375
9971	49-009	LG 625
9972	48-236	LG 724
9974	33-719	LG 915
9975	33-710	LG 918
9976	33-715	LG 919
9977	33-718	LG 919
9979	33-712	LG 921
9980	33-711	LG 921
9980	33-791	LG 921
9981	33-713	LG 921
9981	33-739	LG 921
9987	91-209	LG 552
9988	91-368	LG 460
9990	33-716	LG 921
9994	75-042	LG 308
9995	75-209	LG 308
9997	33-722	LG 918
RURAL KING		
066891923	98-072	LG 408
18900260	195-021	LG 468
18900299	195-033	LG 400
18900309	195-005	LG 373
18900310	195-032	LG 425
18900370	69-260-0	
18901230	69-260-0	
18901243	69-261-0	
18901256	69-262-0	
66291109	195-021	LG 468
66291167	195-072	LG 530
66291196	195-062	LG 376
66291206	195-033	LG 400
66291219	195-032	LG 425
66291222	95-044	LG 465
66291426	95-074	LG 533
66891172	98-499	LG 519
66891198	98-057	LG 513
66891350	198-058	LG 517
66891363	198-059	LG 403
66891376	98-054	LG 574
66891402	98-051	LG 521
66891787	198-049	LG 518
66891907	98-629	LG 412
66891965	198-086	LG 565
66891978	191-392	LG 488
66891981	191-139	LG 491
66891994	191-108	LG 484
66892029	98-093	LG 411
66892300	98-096	LG 404
66892301	95-051	LG 465
66892302	95-057	LG 380
66892303	98-054	LG 574
66892304	195-003	LG 400
66892305	97-024	LG 525
66892306	96-900	LG 526
66892307	92-615	LG 491
SEARS		
07133022000P	98-093	LG 411
07133032000P	198-153	LG 520
07133034000P	95-602	LG 403
07133049000P	98-629	LG 412
07133058000P	95-621	LG 402
07133256000P	195-021	LG 468
STENS		
“		
450-007”	33-182-0	LG 789
025-503	27-500	LG 724
025-507	27-502	LG 725
025-515	27-501	LG 724
050-009	30-419	LG 221
050-017	30-423	LG 221
050-021	30-412	LG 220
050-029	30-418	LG 221
050-804	69-395	LG 206
050-808	30-845	LG 208
050-814	30-835	LG 200
050-814	69-322	LG 200
050-821	30-717	LG 221
051-579	4205M	LG 761
054-007	69-322	LG 200
054-012	30-441	LG 202
054-023	30-327	LG 199
054-043	30-935	LG 201
054-059	07-062	LG 775
054-063	30-527	LG 202
054-071	07-122	LG 775
054-095	33-246	LG 732
054-095	33-407	LG 732
054-163	30-328	LG 200
054-187	30-940	LG 202
054-239	30-966	LG 203
054-259	30-164	LG 200
054-303	30-157	LG 201
054-307	30-158	LG 201
054-900	30-185	LG 203
055-025	69-395	LG 206
055-053	30-125	LG 206
055-057	30-941	LG 219
055-065	30-946	LG 207
055-069	30-947	LG 207
055-085	30-944	LG 207
055-109	83-503	LG 818
055-117	07-331	LG 776
055-121	07-332	LG 776
055-145	33-628	LG 789
055-233	33-518	LG 785
055-266	30-459	LG 207
055-481	33-519	LG 785
055-513	49-700	LG 605
055-565	30-845	LG 208
056-006	30-205	LG 219
056-010	49-840	LG 609
056-066	69-331	LG 218
056-070	31-904	LG 930
056-074	31-907	LG 929
056-086	49-029	LG 609
056-094	49-239	LG 609
056-102	33-606	LG 789
056-118	33-346	LG 786
056-126	33-343	LG 787
056-146	31-116	LG 925
056-154	49-916	LG 629

X

STENS

PART No.	OREGON	Page
056-158	49-019	LG 609
092-410	58-012	LG 957
092-4107	58-012	LG 957
095-362	58-112	LG 960
095-3627	58-112	LG 960
100-008	30-070	LG 216
100-008	30-822	LG 216
100-009	30-325	LG 199
100-012	30-417	LG 193
100-012	30-454	LG 195
100-012	69-007	LG 193
100-016	30-095	LG 206
100-016	69-395	LG 206
100-024	30-081	LG 205
100-032	30-082	LG 205
100-036	30-136	LG 182
100-040	30-080	LG 205
100-040	30-819	LG 205
100-044	30-305	LG 198
100-048	30-936	LG 202
100-052	30-311	LG 199
100-056	30-938	LG 202
100-065	30-093	LG 206
100-069	30-102	LG 220
100-073	30-044	LG 179
100-081	30-132	LG 179
100-085	30-049	LG 181
100-089	30-048	LG 182
100-089	30-820	LG 182
100-093	30-033	LG 183
100-099	30-097	LG 179
100-107	30-098	LG 206
100-115	30-100	LG 217
100-131	30-101	LG 179
100-149	30-430	LG 211
100-149	30-846	LG 211
100-153	30-032	LG 182
100-153	30-136	LG 182
100-160	30-322	LG 200
100-160	30-835	LG 200
100-160	69-322	LG 200
100-164	30-104	LG 180
100-168	30-940	LG 202
100-176	30-914	LG 187
100-180	30-091	LG 217
100-184	30-029	LG 181
100-188	30-309	LG 199
100-192	30-930	LG 187
100-198	30-105	LG 179
100-202	30-939	LG 202
100-210	30-321	LG 199
100-214	30-094	LG 180
100-219	30-925	LG 187
100-222	30-301	LG 217
100-226	30-038	LG 187
100-227	30-926	LG 187
100-234	30-928	
100-238	30-018	LG 198
100-238	30-329	LG 202
100-256	30-037	LG 199
100-256	30-457	LG 202
100-263	30-421	LG 220
100-287	30-067	LG 212
100-293	55-201	LG 190
100-317	30-030	LG 218
100-325	30-721	LG 213
100-347	30-303	LG 198
100-354	30-935	LG 201
100-374	30-810	LG 198
100-378	30-190	LG 207
100-378	30-709	LG 194
100-378	30-828	LG 194
100-378	30-932	LG 196
100-392	55-510	LG 212
100-412	30-711	LG 218
100-416	30-003	LG 190
100-428	30-317	LG 194
100-442	30-961	LG 187
100-446	30-927	LG 187
100-450	30-740	LG 218
100-465	30-025	LG 208
100-469	30-019	LG 208
100-479	30-117	LG 219
100-487	30-106	LG 179
100-503	30-903	LG 186
100-511	30-906	LG 185
100-519	30-026	LG 208
100-529	30-907	LG 186
100-533	30-075	LG 185
100-533	30-708	LG 204
100-537	30-908	LG 185
100-541	30-712	LG 205
100-545	30-909	LG 186
100-552	30-910	LG 186
100-560	30-911	
100-564	30-959	LG 219
100-572	30-702	LG 185
100-576	30-931	LG 191
100-582	55-231	LG 212
100-586	30-950	LG 209
100-606	30-957	LG 209
100-610	30-205	LG 219
100-622	30-054	LG 200
100-622	30-163	LG 200
100-622	30-527	LG 202
100-632	30-919	LG 188
100-640	30-073	LG 183
100-648	30-077	LG 188
100-656	30-157	LG 201
100-660	30-158	LG 201
100-667	30-706	LG 201
100-669	30-923	LG 186
100-673	30-172	LG 184
100-685	30-920	LG 186
100-713	30-956	LG 216
100-719	30-400	LG 193
100-727	30-954	LG 220
100-743	30-929	LG 187
100-750	15-890	LG 327
100-750	30-941	LG 219
100-754	30-945	LG 207
100-758	30-089	LG 204
100-766	30-159	LG 205
100-768	30-946	LG 207
100-770	30-460	LG 207
100-774	30-130	LG 205
100-780	30-056	LG 208
100-784	30-404	LG 192
100-784	30-506	LG 195
100-788	30-139	LG 183
100-792	30-403	LG 192
100-800	30-134	LG 180
100-808	30-066	
100-812	30-031	LG 218
100-812	69-331	LG 218
100-818	30-406	LG 193
100-834	30-123	LG 183
100-842	30-924	LG 186
100-859	55-611	LG 192
100-871	30-039	LG 182
100-875	30-953	LG 211
100-883	30-112	LG 218
100-887	30-736	LG 185
100-891	30-107	LG 180
100-895	30-024	LG 218
100-909	30-111	LG 217
100-913	30-161	LG 184
100-929	30-167	LG 184
100-937	30-815	LG 203
100-941	30-085	LG 203
100-945	30-416	LG 214
100-945	30-837	LG 214
100-949	55-247	LG 214
100-953	30-943	LG 206
100-957	30-088	LG 203
100-957	30-834	LG 203
100-958	30-318	LG 193
100-978	69-007	LG 193
102-008	30-145	LG 184
102-020	30-731	LG 180
102-024	30-735	LG 181
102-024	30-826	LG 181
102-032	30-182	LG 185
102-087	30-412	LG 220
102-091	30-915	LG 187
102-095	30-410	LG 220
102-111	30-951	LG 219
102-119	30-087	LG 182
102-129	30-184	LG 186
102-149	30-027	LG 194
102-149	30-452	LG 195
102-164	30-436	LG 194
102-182	30-327	LG 199
102-190	30-186	LG 184
102-194	30-916	LG 185
102-218	30-064	LG 194
102-226	30-762	LG 183
102-230	30-028	LG 182
102-236	30-304	LG 199
102-244	30-405	LG 193
102-263	30-015	LG 194
102-263	30-843	LG 194
102-285	30-141	LG 217
102-305	30-055	LG 204
102-305	30-845	LG 208
102-309	30-023	LG 205
102-319	30-430	LG 211
102-331	30-944	LG 207
102-335	30-947	LG 207
102-350	30-125	LG 206
102-354	30-057	LG 200
102-358	30-706	LG 201
102-362	30-441	LG 202
102-366	30-966	LG 203
102-370	30-705	LG 200
102-396	30-173	LG 184
102-400	30-116	LG 219
102-404	55-079	LG 214
102-414	30-137	LG 214
102-418	30-942	LG 206
102-422	30-346	LG 195
102-442	30-164	LG 200
102-450	30-443	LG 218
102-491	30-937	LG 202
102-495	30-952	LG 219
102-525	30-917	LG 186
102-533	30-700	LG 180
102-541	30-720	LG 180
102-549	30-710	LG 181
102-561	30-121	LG 190
102-561	30-831	LG 190
102-565	30-119	LG 191
102-565	30-830	LG 191
102-569	30-439-1	LG 190
102-573	30-183	LG 189
102-582	30-187	LG 192
102-582	30-401	LG 193
102-602	30-068	LG 212
102-606	30-955	LG 212
102-644	55-515	LG 211
102-664	30-974	LG 188
102-676	30-921	LG 202
102-689	30-963	LG 195
102-713	30-347	LG 194
102-715	30-413	LG 221
102-719	30-437	LG 192
102-731	30-704	LG 194
102-851	30-168	LG 185
102-863	30-960	LG 187
102-871	30-076	LG 188
102-875	30-074	LG 183
102-875	30-122	LG 183
102-875	30-829	LG 183
102-902	30-761	LG 183
102-910	30-108	LG 180
102-918	30-188	
1031	98-099	LG 412
10421	92-742	LG 475
105-007	35-001	LG 806
105-007	35-007	LG 806
105-049	35-003	LG 809
105-064	35-002	LG 806
105-106	35-005	LG 806
105-114	35-015	LG 810
105-122	35-006	LG 808
105-130	35-008	LG 808
105-148	35-004	LG 806
105-155	35-014	LG 806
105-163	35-012	LG 806
105-189	35-016	LG 809
105-205	35-028	LG 810
105-213	35-032	LG 809
105-254	35-026	LG 807
105-262	35-543	LG 807

2019 Aftermarket X-Reference

STENS

PART No.	OREGON	Page
105-288	35-022	LG 807
105-304	35-033	LG 809
105-346	35-021	LG 810
105-501	35-023	LG 806
105-701	35-034	LG 807
105-701	35-043	LG 808
105-705	35-036	LG 807
105-705	35-044	LG 808
105-709	35-041	LG 808
11494	92-919	LG 435
115-193	07-259	LG 761
115-200	07-261	LG 761
115-204	07-257	LG 761
115-212	07-260	LG 761
115-220	07-258	LG 761
115-284	07-254	LG 761
115-295	07-016	LG 762
115-315	07-154	LG 761
115-319	07-156	LG 761
115-323	07-155	LG 761
115-323	07-255	LG 761
115-327	07-153	LG 761
115-327	07-253	LG 761
115-331	07-157	LG 761
115-335	07-152	LG 761
115-335	07-252	LG 761
115-339	07-150	LG 761
115-339	07-250	
115-343	07-151	LG 761
115-343	07-251	LG 761
115-943	07-450	LG 761
11784	92-915	LG 440
120-006	07-102	LG 774
120-014	07-100	LG 774
12003	92-912	LG 436
120-030	07-001	LG 765
120-048	49-128	LG 747
120-071	02-860	LG 766
120-089	02-861	LG 766
120-101	33-541	LG 950
120-113	02-040	LG 765
120-113	02-041	LG 765
120-114	02-040	LG 765
120-122	02-041	LG 765
120-139	02-700	LG 765
120-140	02-700	LG 765
120-158	07-063	LG 775
120-158	07-107	LG 774
120-158	07-110	LG 776
120-174	49-079	LG 768
120-178	49-058	LG 768
120-188	07-101	LG 775
120-196	07-390	LG 766
120-200	49-034	LG 630
120-212	07-406	LG 767
120-224	07-408	LG 766
120-228	07-125	LG 766
120-251	02-040	LG 765
120-253	07-404	LG 766
120-265	83-300	LG 819
120-279	07-400	LG 767
12028	92-910	LG 443
120-295	55-110	LG 765
120-327	07-393	LG 765
120-345	83-283	LG 818
120-345	83-503	LG 818
120-360	83-301	LG 816
120-372	83-012	LG 819
120-380	83-010	LG 819
120-380	83-400	LG 819
120-388	55-112	LG 778
120-392	07-017	LG 1022
120-394	07-010	LG 764
120-410	07-112	LG 774
120-414	07-118	LG 777
120-430	33-540	LG 950
120-434	33-542	LG 950
120-436	07-103	LG 775
120-436	07-160	LG 774
120-450	07-124	LG 776
120-483	83-401	LG 817
120-485	69-281	LG 814
120-485	83-013	LG 817
120-485	83-280	LG 815
120-513	83-404	LG 818
120-523	83-284	LG 818
120-562	07-107	LG 774
120-562	07-122	LG 775
120-566	07-122	LG 775
120-570	07-122	LG 775
120-626	83-028	LG 817
120-634	69-282	LG 817
120-634	83-029	LG 815
120-634	83-282	LG 817
120-634	83-285	LG 814
120-634	83-501	LG 817
120-658	49-085	LG 769
120-678	07-104	LG 776
120-722	83-302	LG 816
120-810	49-231	LG 630
120-818	83-011	LG 819
120-818	83-014	LG 819
120-914	07-111	LG 776
120-970	83-403	LG 818
120-970	83-503	LG 818
120-990	83-402	LG 817
120-990	83-501	LG 817
125-005	07-303	LG 770
125-017	55-124	LG 771
125-033	07-315	LG 772
125-051	07-314	LG 773
125-070	07-304	LG 770
125-078	07-307	LG 770
125-086	07-024	LG 771
125-094	55-122	LG 770
125-096	55-120	LG 770
125-096	55-123	LG 770
125-120	07-317	LG 771
125-157	07-013	LG 773
125-179	07-308	LG 772
125-179	07-312	LG 773
125-195	55-109	LG 773
125-215	55-018	LG 771
125-219	55-017	LG 772
125-237	45-118	LG 760
125-334	49-413	LG 749
125-336	07-392	LG 767
125-364	07-319	LG 771
125-364	55-125	LG 771
125-368	55-126	LG 771
125-381	07-309	LG 772
125-436	07-025	LG 771
125-508	45-118	LG 760
125-560	07-600	LG 770
125-568	07-601	LG 770
125-568	07-602	LG 770
125-660	07-304	LG 770
125-684	50-454	LG 756
125-688	49-667	LG 750
125-692	49-196	LG 756
125-696	50-453	LG 756
130-096	77-302-1	LG 864
130-130	77-355-1	LG 865
130-138	77-304-1	LG 865
130-146	77-300-1	LG 864
130-211	77-301-1	LG 864
130-211	77-313-1	LG 865
130-526	77-303-1	LG 865
130-698	77-400-0	
130-728	77-404	
131-003	77-300-1	LG 864
131-007	77-301-1	LG 864
131-011	77-302-1	LG 864
131-019	77-305-1	LG 865
131-023	77-307-1	LG 865
131-027	77-309-1	LG 865
131-031	77-310-1	LG 865
131-035	77-314-1	LG 865
131-039	77-312-1	LG 865
131-043	77-314-1	LG 865
131-047	77-315-1	LG 865
131-051	77-319-1	LG 865
135-038	33-201	LG 867
135-053	33-208	LG 866
135-081	33-210	LG 867
135-226	33-215	LG 866
140-020	31-900-0	LG 929
140-020	31-909	LG 928
140-042	31-004	LG 929
140-046	31-100	LG 929
140-053	31-908	LG 929
140-061	31-904	LG 930
140-087	31-909	LG 928
140-103	31-907	LG 929
140-129	31-914	LG 930
140-160	31-004	LG 929
140-301	31-635	LG 937
140-377	31-912	LG 929
14078	95-095	LG 463
145-608	31-642	LG 937
145-612	31-650	LG 937
145-700	31-740	LG 937
145-704	31-742	LG 937
145-708	31-750	LG 937
145-712	31-752	LG 937
145-716	31-760	LG 937
146-027	31-140	LG 937
146-035	31-142	LG 937
146-043	31-150	LG 937
146-050	31-152	LG 937
146-068	31-160	LG 937
146-084	31-232	LG 937
146-092	31-240	LG 937
146-100	31-242	LG 937
146-118	31-250	LG 937
146-126	31-252	LG 937
146-134	31-260	LG 937
146-159	31-540	LG 937
146-167	31-542	LG 937
146-175	31-550	LG 937
150-003	31-051	LG 924
150-019	43-012	LG 927
150-029	43-404	LG 928
150-045	31-050	LG 924
150-094	43-100	LG 932
150-114	33-003	LG 926
150-118	33-005	LG 927
150-197	33-007	LG 926
150-213	31-061	LG 922
150-254	55-800	LG 934
150-262	55-820	LG 935
150-292	43-012	LG 927
150-298	55-813	LG 933
150-300	55-811	LG 933
150-320	31-068	LG 922
150-411	31-065	LG 922
150-419	31-062	LG 922
150-435	31-056	LG 927
150-443	31-918	LG 922
150-551	31-116	LG 925
150-563	31-047	LG 925
150-575	31-117	LG 925
150-611	31-057	LG 930
150-683	31-066	LG 923
150-703	31-052	LG 923
150-707	31-060	LG 922
150-711	31-049	LG 923
150-991	31-041	LG 932
150-991	43-014	LG 932
150-995	43-200	LG 932
155-002	43-400-0	LG 936
155-158	31-081	LG 936
155-244	43-509	LG 936
155-300	43-425	LG 936
155-304	31-083	LG 930
155-304	43-426	LG 936
155-580	43-685	LG 936
155-725	43-403	LG 936
160-010	58-132	LG 960
160-014	58-302	LG 959
160-036	58-133	LG 960
160-081	58-397	LG 958
160-097	58-300	LG 963
160-113	58-399	LG 960
160-127	58-150	LG 960
160-135	58-071	LG 959
160-150	58-131	LG 960
160-166	58-398	LG 959
160-176	58-110	LG 960
160-220	68-373	LG 962
160-224	68-374	LG 962
160-246	58-072	LG 959
160-283	58-011	LG 957
160-291	58-001	LG 961

X

STENS

PART No.	OREGON	Page
160-303	58-135	LG 960
160-307	58-041	LG 961
160-309	58-040	LG 961
160-317	58-088	LG 959
160-369	58-074	LG 959
160-405	66-203	LG 962
160-413	66-205	LG 962
160-417	66-206	LG 962
160-421	66-207	LG 962
160-437	68-211	LG 962
160-637	58-362	LG 958
160-801	58-114	LG 960
160-805	58-119	LG 960
160-933	58-075	LG 959
165-013	70-379	LG 963
165-023	70-301	LG 959
165-027	70-308	LG 959
165-031	68-214	LG 962
165-043	70-312	LG 959
165-050	70-320	LG 959
165-054	70-375	LG 958
165-059	70-321	LG 960
165-062	70-357	LG 958
165-066	70-340	LG 959
165-072	70-363	LG 963
165-076	70-343	LG 958
165-080	70-335	LG 959
165-092	70-326	LG 959
165-108	70-332	LG 959
165-116	70-315	LG 960
165-118	70-378	LG 958
165-122	70-376	LG 958
165-130	70-314	LG 959
165-138	70-330	LG 959
165-167	70-380	LG 958
165-191	70-356	LG 958
165-211	70-317	LG 959
165-215	70-328	LG 959
165-223	70-339	LG 959
165-308	70-316	LG 959
165-316	70-358	LG 958
165-332	70-334	LG 959
165-360	70-364	LG 961
165-364	70-366	LG 961
165-368	70-365	LG 961
165-372	70-367	LG 961
165-376	70-392	LG 961
165-380	70-368	LG 961
165-384	70-369	LG 961
165-388	70-370	LG 961
165-392	70-371	LG 961
165-396	70-372	LG 961
165-400	70-373	LG 961
165-560	70-351	LG 959
165-604	70-394	LG 958
165-620	70-306	LG 960
165-628	70-311	LG 960
170-001	71-400	LG 956
170-005	71-275	LG 956
170-019	71-500	
170-027	71-511	LG 956
170-035	71-600	LG 956
170-043	71-101	LG 956
170-043	71-404	
170-050	71-102	LG 956
170-054	71-405	LG 956
170-068	71-103	LG 956
170-068	71-800	LG 956
170-076	71-406	LG 956
170-076	71-816	LG 956
170-084	71-004	LG 956
170-084	71-104	LG 956
170-084	71-407	LG 956
170-100	71-003	LG 956
170-100	71-100	LG 956
170-118	71-105	LG 957
170-126	71-283	LG 957
170-126	71-408	LG 957
170-130	71-610	LG 956
170-138	71-276	LG 956
170-142	71-097	LG 956
170-159	71-107	LG 957
170-167	71-108	LG 957
170-175	71-250	LG 956
170-183	71-109	LG 956
170-183	71-401	LG 956
170-192	71-098	LG 956
170-225	71-274	LG 956
170-225	71-402	LG 956
172-633	72-736	LG 1045
175-018	72-804	LG 1047
175-067	72-420	LG 1047
175-075	72-729	LG 1044
175-109	72-745	LG 1033
175-133	72-741	LG 1046
175-133	72-795	LG 1044
175-165	72-322	LG 1041
175-224	72-728	LG 1044
175-425	70-710	LG 964
175-425	72-725	LG 1044
175-500	70-701	LG 964
175-500	72-796	LG 1043
175-505	71-001	LG 957
175-506	72-722	LG 1045
175-510	72-737	LG 1045
175-513	71-002	LG 957
175-515	72-723	LG 1043
175-520	70-706	LG 964
175-613	72-749	LG 1046
175-617	72-756	LG 1046
175-629	72-735	LG 1045
180-100	67-012	LG 965
180-104	67-009	LG 965
180-104	67-020	LG 965
180-108	67-010	LG 965
180-112	67-013	LG 965
180-116	67-001	LG 965
180-120	67-005	LG 965
180-124	67-018	LG 965
180-128	67-017	LG 965
180-132	67-014	LG 965
180-136	67-015	LG 965
180-376	67-011	LG 965
180-428	67-008	LG 965
180-432	67-007	LG 965
185-009	72-427	LG 1029
185-025	72-437	LG 1030
185-033	72-410	LG 1030
195-008	72-106	LG 1029
195-016	72-107	LG 1029
195-016	72-430	LG 1034
195-025	72-108	LG 1031
200-014	72-449	LG 1030
205-039	72-510	LG 1036
205-047	72-450	LG 1037
205-088	72-436	LG 1034
205-104	72-109	LG 1037
205-112	72-746	LG 1032
205-120	72-747	LG 1036
205-211	72-500	LG 1034
205-229	72-508	LG 1034
205-370	72-456	LG 1036
205-374	72-458	LG 1031
205-390	72-003	LG 1031
205-402	72-001	LG 1031
205-512	72-024	LG 1035
210-013	72-316	LG 1042
210-033	72-758	LG 1042
210-037	72-020	LG 1039
210-043	72-021	LG 1040
210-047	72-306	LG 1038
210-051	72-119	LG 1040
210-054	72-307	LG 1038
210-108	72-323	LG 1041
210-124	72-100	
210-124	72-304	LG 1038
210-132	72-161	LG 1038
210-142	72-135	LG 1040
210-146	72-309	LG 1042
210-165	72-311-1	LG 1039
210-169	72-051	LG 1039
210-179	72-318	LG 1042
210-199	72-027	LG 1039
210-203	72-025	LG 1039
210-203	72-094	LG 1042
210-203	72-165	LG 1041
210-203	72-308-1	LG 1042
210-220	72-162	LG 1038
210-247	72-099	LG 1040
210-259	72-098	LG 1040
210-263	72-129	LG 1041
210-275	72-015	LG 1039
210-303	72-131	LG 1041
210-443	72-134	LG 1040
210-451	72-133	LG 1040
210-455	72-164	LG 1040
215-012	45-112	LG 241
215-020	45-012	LG 224
215-038	45-058	LG 232
215-046	45-034	LG 224
215-061	45-258	LG 224
215-079	45-234	LG 224
215-087	45-206	LG 231
215-095	45-205	LG 228
215-145	45-079	LG 249
215-160	45-080	LG 249
215-202	45-260	LG 224
215-210	45-000	LG 237
215-211	45-000	LG 237
215-305	45-023	LG 249
215-370	45-047	LG 241
215-370	45-258	LG 224
215-557	45-003	LG 244
215-565	45-098	LG 243
225-029	45-043	LG 243
225-029	45-057	LG 249
225-086	45-087	LG 243
225-128	45-088	LG 240
225-144	45-092	LG 854
225-205	48-007	LG 1039
225-217	45-225	LG 232
225-235	45-082	LG 854
225-268	45-620	LG 225
225-276	45-019	LG 239
225-449	45-037	LG 242
225-482	45-009	LG 853
225-532	45-100	LG 239
225-714	48-320	LG 238
225-722	45-030	LG 245
225-722	45-127	LG 244
225-746	45-046	LG 241
225-750	45-095	LG 855
225-754	45-072	LG 242
225-837	45-831	LG 234
225-839	45-006	LG 249
225-854	45-007	LG 853
225-862	45-013	LG 853
225-987	15-107	LG 273
225-987	45-107	LG 245
230-003	45-242	LG 243
230-011	45-243	LG 243
230-015	45-243	LG 243
230-019	45-242	LG 243
230-029	45-259	LG 224
230-033	45-295	LG 232
230-041	45-207	LG 236
230-052	45-256	LG 224
230-056	48-211	LG 233
230-060	45-257	LG 245
230-086	45-220	LG 232
230-090	45-220	LG 232
230-102	45-025	LG 247
230-102	45-227	LG 234
230-106	45-209	LG 246
230-128	45-010	LG 238
230-144	45-208	LG 245
230-160	45-295	LG 232
230-221	45-269	LG 227
230-237	45-031	LG 232
230-237	45-063	LG 230
230-276	45-267	LG 235
230-283	45-270	LG 227
230-287	45-268	LG 227
230-300	45-035	LG 226
230-404	45-130	LG 232
230-437	45-404	LG 234
230-605	45-264	LG 224
230-665	45-121	LG 230
230-669	45-060	LG 234
238-020	75-320	LG 334
238-021	75-321	LG 334
238-022	75-322	LG 334
238-023	75-323	LG 334
238-024	75-324	LG 334

2019 Aftermarket X-Reference

STENS

PART No.	OREGON	Page
238-025	75-325	LG 334
238-026	15-267	LG 268
238-026	75-326	LG 334
238-027	75-327	LG 334
238-028	75-328	LG 334
238-029	75-329	LG 334
238-030	75-330	LG 334
238-031	75-331	LG 334
238-032	75-332	LG 334
238-033	15-193	LG 266
238-033	75-333	LG 334
238-034	75-334	LG 334
238-035	15-716	LG 315
238-035	75-335	LG 334
238-036	15-195	LG 265
238-036	15-268	LG 268
238-036	75-336	LG 334
238-037	75-337	LG 334
238-038	75-338	LG 334
238-039	75-339	LG 334
238-040	75-340	LG 334
238-041	75-341	LG 334
238-042	75-342	LG 334
238-043	75-343	LG 334
238-044	75-344	LG 334
238-045	75-345	LG 334
238-046	75-346	LG 334
238-048	75-348	LG 334
238-049	75-349	LG 334
238-050	75-350	LG 334
240-048	41-005	LG 728
240-068	76-070-0	LG 726
240-275	51-001-0	LG 727
240-325	76-002	LG 726
240-366	76-110	LG 726
240-394	76-067-0	LG 726
240-416	48-080	
240-440	51-000	LG 727
240-452	82-100	LG 802
240-507	49-050	LG 954
240-630	81-101	
240-648	81-102	LG 805
240-671	51-222	LG 727
240-680	51-013	LG 725
240-709	51-223	LG 726
240-804	49-051	LG 954
240-860	48-148	LG 695
240-975	76-014	LG 726
241-076	48-232	LG 724
241-200	48-236	LG 724
245-005	45-117	LG 938
245-013	45-132	LG 939
245-019	45-103	LG 938
245-027	45-104	LG 939
245-027	45-111	LG 939
245-043	45-114	LG 938
245-050	45-301	LG 804
245-054	45-303	LG 804
245-068	45-302	LG 804
245-076	45-305	LG 804
245-084	45-306	LG 804
248-018	75-418	LG 334
248-019	75-419	LG 334
248-020	75-420	LG 334
248-021	75-421	LG 334
248-022	75-422	LG 334
248-023	75-423	LG 334
248-024	75-424	LG 334
248-025	75-425	LG 334
248-026	75-426	LG 334
248-027	75-427	LG 334
248-028	75-010	LG 311
248-028	75-428	LG 334
248-029	75-429	LG 334
248-031	15-645	LG 306
248-031	75-431	LG 334
248-032	75-432	LG 334
248-033	75-433	LG 334
248-034	15-443	LG 284
248-034	15-649	LG 309
248-034	75-434	LG 334
248-035	15-646	LG 306
248-035	75-435	LG 334
248-036	75-436	LG 334
248-037	75-437	LG 334
248-038	75-438	LG 334
248-039	15-194	LG 265
248-039	75-439	LG 334
248-040	75-440	LG 334
248-041	15-719	LG 312
248-041	75-441	LG 334
248-041	75-890	LG 289
248-042	75-442	LG 334
248-043	75-443	LG 334
248-044	75-444	LG 334
248-045	75-445	LG 334
248-046	15-280	LG 270
248-046	75-446	LG 334
248-047	75-447	LG 334
248-048	15-801	LG 321
248-048	75-448	LG 334
248-049	75-449	LG 334
248-050	75-223	LG 269
248-050	75-450	LG 334
248-051	15-947	LG 328
248-051	75-451	LG 334
248-052	75-452	LG 334
248-052	75-889	LG 252
248-053	75-453	LG 334
248-054	75-454	LG 334
248-055	75-455	LG 334
248-056	75-456	LG 334
248-057	15-601	LG 274
248-057	75-457	LG 334
248-058	75-458	LG 334
248-059	15-485	LG 293
248-059	75-459	LG 334
248-060	15-499	LG 294
248-060	75-460	LG 334
248-060	75-974	LG 294
248-061	75-461	LG 334
248-062	75-462	LG 334
248-063	15-657	LG 259
248-063	75-463	LG 334
248-064	75-464	LG 334
248-065	75-465	LG 334
248-066	75-466	LG 334
248-067	75-467	LG 334
248-068	75-468	LG 334
248-069	75-469	LG 335
248-070	75-470	LG 335
248-071	75-471	LG 335
248-072	15-735	LG 316
248-072	75-472	LG 335
248-073	75-473	LG 335
248-074	75-474	LG 335
248-075	75-475	LG 335
248-076	75-476	LG 335
248-077	75-477	LG 335
248-078	15-625	LG 275
248-078	75-478	LG 335
248-079	15-729	LG 316
248-079	75-479	LG 335
248-080	15-695	LG 260
248-080	75-480	LG 335
248-081	75-481	LG 335
248-082	75-482	LG 335
248-083	75-483	LG 335
248-084	75-484	LG 335
248-085	75-485	LG 335
248-086	75-486	LG 335
248-087	75-487	LG 335
248-087	75-934	LG 310
248-088	75-488	LG 335
248-089	15-660	LG 309
248-089	75-489	LG 335
248-090	15-634	LG 307
248-090	15-733	LG 316
248-090	75-490	LG 335
248-091	15-732	LG 316
248-091	75-491	LG 335
248-092	15-691	LG 260
248-092	75-492	LG 335
248-093	15-724	LG 316
248-093	75-493	LG 335
248-094	75-494	LG 335
248-095	75-495	LG 335
248-096	75-496	LG 335
248-097	15-815	LG 321
248-097	75-497	LG 335
248-098	75-498	LG 335
248-099	75-499	LG 335
248-100	15-593	LG 301
248-100	75-400	LG 335
248-101	75-401	LG 335
248-102	15-788	LG 320
248-102	75-402	LG 335
248-102	75-975	LG 294
248-103	75-403	LG 256
248-104	75-404	LG 335
248-105	15-192	LG 265
248-105	15-589	LG 273
248-105	75-405	LG 335
248-106	75-406	LG 335
248-107	15-629	LG 304
248-107	75-407	LG 335
248-108	15-654	LG 309
248-108	75-408	LG 335
248-109	75-409	LG 335
248-110	75-410	LG 335
248-111	75-411	LG 335
248-112	75-412	LG 335
248-113	75-413	LG 335
248-114	15-829	LG 324
248-114	75-414	LG 335
248-117	75-417	LG 335
250-001	32-101	LG 676
250-005	32-100	LG 676
250-019	32-105	LG 676
250-027	32-107	LG 676
250-050	32-116	LG 676
250-081	02-187	LG 676
250-084	02-188	LG 676
250-085	02-188	LG 676
250-092	02-190	LG 676
250-093	02-190	LG 676
250-100	02-191	LG 676
250-101	02-191	LG 676
250-126	02-195	LG 676
250-127	02-195	LG 676
250-134	02-196	LG 676
250-135	02-196	LG 676
250-139	02-175	LG 676
250-142	02-176	LG 676
250-143	02-176	LG 676
250-159	02-177	LG 676
250-160	02-177	LG 676
250-167	02-178	LG 676
250-168	02-178	LG 676
250-183	02-182	LG 676
250-184	02-182	LG 676
250-191	02-184	LG 676
250-192	02-184	LG 676
250-223	32-110	LG 676
250-228	02-181	LG 676
250-232	02-193	LG 676
250-266	32-103	LG 676
250-274	32-108	LG 676
255-109	84-011	LG 675
255-117	84-007	LG 675
255-125	84-004	LG 675
255-133	84-001	LG 675
255-190	45-634	LG 675
255-285	33-133	LG 736
255-289	33-134	LG 736
255-297	33-104	LG 735
255-299	84-027	LG 675
255-307	84-009	LG 675
255-315	84-006	LG 675
255-319	33-117	LG 733
255-323	33-118-1	LG 733
255-331	33-119-1	LG 734
255-335	33-121	LG 734
255-351	33-110	LG 735
255-363	33-122-1	LG 734
255-375	33-184	LG 737
255-387	33-114	LG 734
255-407	75-368	LG 309
255-415	33-183	LG 735
255-423	33-116	LG 735
255-431	33-124	LG 736
255-435	33-127	LG 737
255-435	33-185	LG 737
255-455	33-132	LG 735

STENS

PART No.	OREGON	Page
255-475	33-139	LG 736
255-487	33-187	LG 738
255-488	33-157	LG 738
255-491	33-154	LG 741
255-511	33-112	LG 735
255-515	33-111	LG 735
255-519	33-113	LG 740
255-535	33-115	LG 738
255-539	33-125-1	LG 736
255-543	33-126-1	LG 736
255-547	33-128-1	LG 741
255-552	33-136	LG 737
255-555	33-135	LG 737
255-560	33-137	LG 737
255-560	33-153	LG 737
255-560	33-156	LG 738
255-627	33-120	LG 734
255-627	33-138	LG 738
255-642	33-155	LG 738
255-659	33-188	LG 738
255-887	33-190	LG 741
258-027	75-527	LG 334
258-028	75-528	LG 334
258-029	75-529	LG 334
258-030	75-530	LG 334
258-031	75-531	LG 334
258-032	75-532	LG 334
258-033	75-533	LG 334
258-034	75-534	LG 334
258-035	75-535	LG 334
258-036	75-536	LG 334
258-037	75-537	LG 334
258-038	75-538	LG 334
258-039	75-539	LG 334
258-040	75-540	LG 334
258-041	75-541	LG 334
258-042	75-542	LG 334
258-043	75-543	LG 334
258-044	75-544	LG 334
258-045	75-545	LG 334
258-046	75-546	LG 334
258-047	75-547	LG 334
258-048	75-548	LG 334
258-049	75-549	LG 334
258-050	15-682	LG 313
258-050	75-550	LG 334
258-051	75-551	LG 334
258-052	15-409	LG 280
258-052	75-552	LG 334
258-053	75-553	LG 334
258-054	75-554	LG 334
258-055	75-555	LG 334
258-056	75-556	LG 334
258-057	75-557	LG 334
258-058	75-558	LG 253
258-059	15-595	LG 274
258-059	75-559	LG 334
258-060	75-560	LG 334
258-061	75-561	LG 334
258-062	75-562	LG 334
258-063	15-274	LG 270
258-063	15-277	LG 270
258-063	75-563	LG 253
258-064	15-921	LG 329
258-064	75-564	LG 334
258-065	15-445	LG 284
258-065	75-565	LG 253
258-066	75-566	LG 334
258-067	75-567	LG 334
258-068	75-568	LG 334
258-069	15-190	LG 265
258-069	75-569	LG 335
258-070	75-570	LG 335
258-071	15-804	LG 321
258-071	75-571	LG 335
258-072	15-799	LG 320
258-072	75-572	LG 335
258-073	75-573	LG 335
258-074	15-650	LG 259
258-074	75-574	LG 335
258-075	75-575	LG 335
258-076	75-576	LG 335
258-077	75-577	LG 335
258-078	75-578	LG 335
258-079	75-579	LG 335
258-080	75-580	LG 335
258-081	15-922	LG 329
258-081	75-581	LG 335
258-082	75-582	LG 254
258-083	15-652	LG 259
258-083	75-583	LG 335
258-084	15-659	LG 309
258-084	75-584	LG 335
258-085	75-585	LG 335
258-086	75-586	LG 335
258-087	75-587	LG 335
258-088	75-588	LG 335
258-089	75-589	LG 335
258-090	75-590	LG 335
258-091	15-920	LG 329
258-091	75-591	LG 335
258-092	15-588	LG 275
258-092	75-592	LG 335
258-093	75-593	LG 335
258-094	15-408	LG 279
258-094	75-594	LG 335
258-095	75-595	LG 335
258-096	75-596	LG 335
258-097	75-597	LG 335
258-097	75-977	LG 310
258-098	75-598	LG 335
258-099	75-599	LG 335
258-100	75-500	LG 335
258-103	75-503	LG 256
258-114	15-242	LG 267
260-000	80-036	LG 727
260-018	80-014	LG 727
260-042	48-048	LG 725
260-059	48-049	LG 725
260-075	48-051	LG 725
260-133	48-043	
260-166	60-048	LG 722
260-170	60-065	LG 722
260-174	60-060	LG 722
260-182	60-092	LG 722
260-224	46-200	LG 722
260-232	46-200	LG 722
265-007	75-681	LG 313
265-012	75-724	LG 310
265-013	75-091	LG 302
265-014	75-246	LG 295
265-017	75-040	LG 306
265-018	75-114	LG 281
265-020	75-264	LG 304
265-022	75-266	LG 254
265-024	75-964	LG 309
265-025	15-630	LG 306
265-025	75-005	LG 307
265-026	75-209	LG 308
265-027	15-685	LG 315
265-027	75-210	LG 309
265-028	15-686	LG 315
265-028	75-267	LG 309
265-029	15-961	LG 297
265-030	75-129	LG 255
265-031	75-135	LG 308
265-033	75-112	LG 306
265-042	15-870	LG 326
265-042	75-167	LG 289
265-043	15-055	LG 331
265-047	115-029	LG 255
265-047	15-029	LG 291
265-048	75-898	LG 262
265-049	75-936	LG 290
265-050	75-042	LG 308
265-051	15-641	LG 308
265-053	75-107	LG 254
265-053	75-360	LG 294
265-056	75-161	LG 255
265-057	75-171	LG 289
265-057	75-892	LG 255
265-059	75-161	LG 255
265-060	115-204	LG 282
265-064	15-020	LG 291
265-065	75-024	LG 302
265-067	75-170	LG 290
265-069	75-000	LG 262
265-071	75-196	LG 290
265-073	75-195	LG 254
265-074	75-029	LG 253
265-078	75-887	LG 323
265-079	15-401	LG 279
265-083	75-816	LG 257
265-084	15-590	LG 300
265-087	15-457	LG 287
265-088	75-670	LG 288
265-089	75-671	LG 287
265-090	75-281	LG 301
265-092	75-099	LG 262
265-095	75-243	LG 288
265-096	15-051	LG 250
265-097	75-984	LG 257
265-098	75-242	LG 288
265-099	75-295	LG 295
265-100	75-824	LG 274
265-101	75-995	LG 303
265-102	15-455	LG 287
265-103	75-362	LG 256
265-105	75-364	LG 304
265-106	15-022	LG 292
265-107	75-380	LG 324
265-108	75-002	LG 301
265-109	75-278	LG 324
265-110	15-483	LG 293
265-111	15-321	LG 272
265-113	75-378	LG 324
265-114	75-277	LG 324
265-116	75-028	LG 302
265-117	15-046	LG 314
265-124	15-839	LG 324
265-124	75-136	LG 309
265-129	75-208	LG 277
265-131	75-199	LG 254
265-134	75-186	LG 281
265-135	75-960	LG 257
265-136	75-097	LG 289
265-137	75-188	LG 256
265-138	75-967	LG 258
265-141	75-234	LG 281
265-142	75-215	LG 313
265-145	75-270	LG 257
265-146	75-216	LG 257
265-147	75-268	LG 313
265-152	75-106	LG 261
265-153	75-263	LG 304
265-154	75-273	LG 320
265-155	15-037	LG 295
265-156	75-685	LG 324
265-157	15-826	LG 321
265-158	15-827	LG 322
265-159	15-828	LG 322
265-160	75-686	LG 324
265-162	15-115	LG 282
265-164	15-117	LG 283
265-167	75-682	LG 258
265-168	75-629	LG 314
265-170	15-116	LG 283
265-172	75-676	LG 304
265-173	75-221	LG 280
265-174	75-993	LG 303
265-177	75-648	LG 257
265-179	75-649	LG 258
265-181	15-009	LG 296
265-182	115-220	LG 264
265-183	15-399	LG 282
265-186	75-979	LG 255
265-187	75-709	LG 305
265-188	75-164	LG 262
265-189	75-631	LG 314
265-189	75-943	LG 283
265-190	75-961	LG 281
265-191	75-917	LG 282
265-194	15-025	LG 255
265-195	75-714	LG 276
265-196	75-814	LG 276
265-198	75-673	LG 305
265-199	75-073	LG 319
265-200	15-002	LG 311
265-201	75-813	LG 276
265-204	75-025	LG 253
265-206	75-677	LG 304
265-208	75-169	LG 290
265-211	75-886	LG 276
265-213	15-613	LG 305

2019 Aftermarket X-Reference

STENS

PART No.	OREGON	Page
265-214	15-021	LG 256
265-214	75-895	LG 263
265-215	75-260	LG 312
265-216	15-027	LG 306
265-217	75-810	LG 257
265-218	75-893	LG 263
265-219	15-028	LG 277
265-220	75-894	LG 263
265-222	15-026	LG 277
265-223	75-815	LG 277
265-226	75-600	LG 276
265-227	115-145	LG 323
265-228	75-823	LG 254
265-230	75-710	LG 257
265-234	15-623	LG 274
265-235	75-716	LG 276
265-237	75-806	LG 293
265-237	75-978	LG 293
265-238	75-800	LG 257
265-239	75-703	LG 295
265-241	75-297	LG 295
265-242	75-300	LG 295
265-243	75-240	LG 297
265-244	75-802	LG 296
265-245	15-604	LG 275
265-246	75-706	LG 256
265-247	75-072	LG 268
265-249	115-219	LG 305
265-252	75-249	LG 305
265-255	75-163	LG 261
265-256	75-157	LG 251
265-257	75-675	LG 303
265-258	75-363	LG 304
265-263	75-108	LG 289
265-264	75-994	LG 304
265-265	75-065	LG 307
265-272	75-068	LG 318
265-273	75-684	LG 322
265-275	115-146	LG 256
265-276	75-935	LG 255
265-280	75-194	LG 289
265-286	75-101	LG 269
265-293	15-138	LG 323
265-302	75-799	LG 293
265-303	15-498	LG 294
265-304	15-963	LG 297
265-306	75-061	LG 307
265-307	15-492	LG 294
265-308	15-490	LG 294
265-309	15-491	LG 294
265-313	15-497	LG 294
265-314	75-122	LG 307
265-316	75-803	LG 258
265-320	15-123	LG 284
265-322	75-041	LG 255
265-332	15-124	LG 284
265-348	75-043	LG 312
265-348	75-956	LG 278
265-349	75-669	LG 284
265-350	15-142	LG 323
265-357	15-603	LG 304
265-361	15-230	LG 260
265-363	75-353	LG 319
265-375	75-044	LG 313
265-376	15-135	LG 314
265-379	15-010	LG 296
265-384	75-204	LG 309
265-387	75-055	LG 255
265-401	75-052	LG 313
265-404	15-122	LG 284
265-413	75-075	LG 322
265-415	15-110	LG 273
265-417	75-094	LG 252
265-418	15-005	LG 282
265-421	75-508	LG 319
265-425	75-027	LG 302
265-430	15-128	LG 284
265-433	75-148	LG 300
265-437	75-727	LG 319
265-451	15-410	LG 280
265-454	15-139	LG 323
265-458	75-177	LG 281
265-459	15-404	LG 279
265-460	15-405	LG 279
265-462	15-130	LG 296
265-466	75-275	LG 322
265-467	15-143	LG 323
265-470	75-354	LG 319
265-474	75-205	LG 322
265-478	75-066	LG 251
265-488	75-045	LG 307
265-492	75-113	LG 281
265-494	75-152	LG 308
265-500	15-004	LG 282
265-504	75-098	LG 251
265-504	75-365	LG 862
265-513	15-113	LG 282
265-516	75-001	LG 308
265-524	115-209	LG 306
265-525	15-014	LG 251
265-533	75-980	LG 863
265-534	15-795	LG 320
265-535	15-111	LG 273
265-536	75-021	LG 274
265-545	15-127	LG 284
265-549	15-106	LG 273
265-550	75-035	LG 302
265-552	15-133	LG 306
265-555	15-118	LG 283
265-556	15-112	LG 305
265-557	75-119	LG 302
265-562	15-107	LG 273
265-563	15-047	
265-565	75-807	LG 255
265-570	15-140	LG 323
265-577	75-063	LG 307
265-603	75-038	LG 307
265-604	15-129	LG 292
265-617	15-119	LG 283
265-619	75-211	LG 277
265-623	75-371	LG 316
265-627	75-058	LG 255
265-628	15-114	LG 282
265-630	15-053	LG 305
265-631	15-054	LG 324
265-638	75-299	LG 295
265-639	75-973	LG 294
265-640	75-248	LG 294
265-641	115-206	LG 294
265-644	15-125	LG 284
265-645	75-057	LG 307
265-649	75-031	LG 278
265-650	15-121	LG 284
265-653	15-134	LG 314
265-656	75-212	LG 268
265-660	15-050	LG 323
265-662	15-013	LG 256
265-665	15-131	LG 296
265-668	15-056	LG 331
265-670	15-141	LG 323
265-672	75-272	LG 684
265-673	15-036	LG 295
265-675	15-132	LG 306
265-676	75-120	LG 300
265-678	75-060	LG 322
265-681	15-040	LG 296
265-683	15-039	LG 296
265-685	15-038	LG 296
265-686	15-746	LG 317
265-686	75-105	LG 319
265-690	15-741	LG 317
265-698	15-057	LG 331
265-700	15-605	LG 275
265-707	75-757	LG 256
265-709	75-759	LG 279
265-711	15-019	LG 279
265-716	15-137	LG 323
265-725	15-017	LG 279
265-726	75-755	LG 258
265-727	15-018	LG 279
265-730	75-756	LG 279
265-732	75-165	LG 322
265-740	75-154	LG 312
265-741	15-104	LG 269
265-744	75-955	LG 278
265-746	15-105	LG 269
265-748	75-054	LG 312
265-751	15-101	LG 269
265-753	15-108	LG 273
265-754	15-102	LG 269
265-757	15-103	LG 269
265-759	15-041	LG 297
265-764	15-144	LG 323
265-768	15-045	LG 314
265-777	15-042	LG 297
265-781	15-188	LG 285
265-793	75-145	LG 300
265-794	15-548	LG 298
265-800	15-109	LG 273
265-801	75-022	LG 307
265-802	75-812	LG 275
265-803	75-134	LG 275
265-804	115-208	LG 275
265-807	75-658	LG 275
265-808	75-912	LG 255
265-809	75-192	LG 251
265-810	75-674	LG 303
265-811	75-158	LG 251
265-812	75-118	LG 302
265-814	75-361	LG 254
265-815	75-151	LG 308
265-817	75-218	LG 316
265-818	75-913	LG 291
265-821	75-655	LG 274
265-824	75-659	LG 275
265-825	75-654	LG 263
265-826	75-919	LG 293
265-828	75-992	LG 293
265-829	75-178	LG 281
265-831	15-049	LG 323
265-832	75-235	LG 281
265-832	75-667	LG 282
265-833	75-230	LG 281
265-834	75-232	LG 281
265-835	15-731	LG 316
265-836	75-963	LG 281
265-838	75-225	LG 322
265-839	15-320	LG 272
265-842	75-231	LG 281
265-843	75-086	LG 265
265-845	75-292	LG 281
265-849	75-664	LG 279
265-850	75-662	LG 258
265-852	75-665	LG 279
265-853	75-712	LG 310
265-856	75-663	LG 279
265-858	75-957	LG 282
265-859	75-240	LG 297
265-860	15-052	LG 315
265-861	75-370	LG 257
265-862	75-632	LG 314
265-864	75-637	LG 253
265-865	75-641	LG 314
265-866	75-642	LG 314
265-867	75-372	LG 316
265-869	75-644	LG 314
265-870	75-645	LG 314
265-872	75-646	LG 257
265-873	75-047	LG 313
265-874	75-048	LG 313
265-876	75-058	LG 255
265-883	75-720	LG 270
265-887	15-016	LG 323
265-890	75-373	LG 322
265-903	75-906	LG 251
265-905	75-907	LG 264
265-907	75-908	LG 265
265-909	75-909	LG 251
265-910	75-672	LG 294
265-912	75-983	LG 862
265-913	75-159	LG 303
265-914	75-084	LG 265
265-918	75-160	LG 303
265-921	15-012	LG 299
265-924	15-011	LG 299
265-925	15-501	LG 294
265-926	75-713	LG 310
265-928	75-095	LG 268
265-929	75-939	LG 322
265-930	75-711	LG 310
265-932	75-949	LG 330
265-934	75-999	LG 253
265-938	75-197	LG 262
265-942	75-144	LG 284

STENS

PART No.	OREGON	Page
265-944	15-120	LG 284
265-948	75-207	LG 256
265-952	75-193	LG 269
265-953	15-136	LG 314
265-956	115-212	LG 325
265-957	15-843	LG 325
265-962	15-844	LG 325
265-978	115-218	LG 331
265-987	75-117	LG 265
265-991	75-096	LG 265
265-994	75-951	LG 331
265-995	75-087	LG 265
265-996	75-952	LG 330
265-998	75-948	LG 331
269-099	75-295	LG 295
269-924	15-011	LG 299
275-012	44-340	LG 838
275-020	78-690	LG 840
275-220	44-347	LG 840
275-240	44-342	LG 839
275-260	78-649	LG 841
275-272	78-121	LG 827
275-276	44-302	LG 841
275-280	44-371	LG 834
275-284	44-370	LG 834
275-339	44-306	LG 840
275-404	44-313	LG 840
275-450	44-368	LG 837
275-469	44-100	LG 837
275-487	44-319	LG 840
275-515	44-102	LG 85
275-519	44-369	LG 837
275-529	44-321	LG 840
275-537	44-322	LG 840
275-564	78-680	LG 840
275-594	44-323	LG 838
275-644	44-341	LG 839
275-697	78-673	LG 839
275-727	44-332	LG 838
275-780	44-366	LG 837
275-840	78-003	LG 839
275-875	78-640	LG 835
275-891	34-106	LG 830
275-891	34-107	LG 823
275-909	78-641	LG 835
275-945	78-642	LG 841
280-016	34-002	LG 821
280-020	34-210	LG 834
280-024	34-003	LG 821
280-028	34-021	LG 833
280-032	34-005	LG 821
280-040	34-006	LG 821
280-044	78-028	LG 831
280-052	34-820	LG 833
280-057	34-008	LG 821
280-065	34-009	LG 821
280-065	34-010	LG 831
280-073	34-011	LG 821
280-081	34-012	LG 821
280-084	78-118-0	LG 830
280-097	78-129	LG 830
280-099	34-015	LG 821
280-099	78-114	LG 829
280-107	34-017	LG 821
280-115	34-018	LG 821
280-123	34-019	LG 821
280-127	34-042	LG 823
280-131	34-020	LG 821
280-131	78-044-1	LG 834
280-135	34-041	LG 831
280-135	78-050	LG 831
280-143	34-102	LG 830
280-149	34-022	LG 822
280-156	34-023	LG 822
280-156	78-031	LG 826
280-164	34-007	LG 826
280-164	34-024	LG 822
280-164	78-021	LG 832
280-164	78-112	LG 829
280-214	34-015	LG 821
280-238	78-053	LG 824
280-239	78-052	LG 824
280-240	78-013	LG 825
280-241	34-103	LG 830
280-242	34-109	LG 831
280-242	78-133	LG 831
280-248	34-030	LG 821
280-248	78-019	LG 831
280-255	34-031	LG 821
280-263	34-033	LG 821
280-271	34-034	LG 821
280-279	34-209	LG 826
280-297	34-036	LG 821
280-301	78-128	LG 829
280-305	34-037	LG 821
280-309	78-131	LG 823
280-313	34-038	LG 821
280-321	34-044	LG 821
280-321	78-113	LG 829
280-333	78-010	LG 827
280-339	34-042	LG 823
280-339	34-824	LG 832
280-347	34-043	LG 823
280-362	34-022	LG 822
280-362	78-029	LG 831
280-362	78-041	LG 823
280-378	78-045	LG 828
280-382	34-822	LG 832
280-386	34-066	LG 832
280-438	34-013	LG 824
280-438	34-014	LG 831
280-446	34-028	LG 821
280-453	34-029	LG 821
280-499	34-826	LG 833
280-499	78-027	LG 832
280-529	78-032	LG 822
280-578	78-034	LG 822
280-586	78-033	LG 834
280-602	78-043	LG 824
280-651	78-046	LG 826
280-651	78-098	LG 832
280-651	78-110	LG 833
280-671	34-046	LG 824
280-685	34-004	LG 832
280-709	34-009	LG 821
280-719	34-024	LG 822
280-743	34-039	LG 834
280-750	34-032	LG 834
280-754	78-041	LG 823
280-770	34-049	LG 824
280-770	78-049	LG 833
280-773	34-104	LG 830
280-794	34-201	LG 822
280-798	34-205	LG 826
280-802	34-206	LG 826
280-810	34-100	LG 830
280-838	78-023	LG 822
280-850	78-009	LG 827
280-858	78-130	LG 829
280-862	78-011	LG 827
280-866	78-005	LG 823
280-874	78-006	LG 828
280-874	78-022	LG 827
280-954	78-134	LG 829
285-003	45-116	LG 939
285-011	09-803	LG 697
285-031	82-678	LG 904
285-041	82-510	LG 872
285-084	82-503	LG 895
285-088	82-502	LG 894
285-092	82-501	LG 894
285-093	82-356	LG 893
285-095	85-029	LG 909
285-097	85-028	LG 908
285-104	04-015	LG 899
285-105	82-517	LG 896
285-107	82-411	LG 878
285-108	82-015	
285-110	82-500	LG 893
285-112	82-516	LG 896
285-113	82-515	LG 896
285-114	84-010	LG 913
285-116	82-512	LG 895
285-117	82-511	LG 895
285-117	85-053	LG 907
285-119	82-513-2	LG 896
285-130	85-008	LG 909
285-174	82-245	
285-181	82-328	LG 891
285-187	85-012	LG 909
285-191	82-322	LG 883
285-194	82-347	LG 885
285-194	82-348	LG 885
285-201	82-350	LG 889
285-205	82-514	LG 869
285-213	82-677	LG 903
285-215	82-022	LG 886
285-217	82-308	LG 874
285-221	82-493	LG 869
285-239	85-001	LG 908
285-300	82-042	LG 891
285-312	82-403	LG 879
285-332	82-023	LG 902
285-332	82-243	LG 902
285-342	45-250	LG 243
285-354	82-040	LG 890
285-358	82-041	LG 890
285-369	82-221	LG 872
285-373	85-023	LG 907
285-383	82-014	LG 871
285-395	02-442	LG 803
285-427	82-244	LG 910
285-435	82-250	LG 902
285-441	82-024	LG 871
285-441	82-220	LG 871
285-445	46-024	LG 719
285-452	85-005	
285-456	82-225	LG 871
285-464	85-017	LG 907
285-487	45-110	LG 245
285-498	48-202	LG 694
285-544	05-061	LG 914
285-585	82-026	LG 872
285-597	82-325	LG 903
285-635	05-060	LG 914
285-639	82-344	LG 885
285-639	82-346	LG 885
285-688	48-200	LG 694
285-795	82-318	LG 884
285-809	82-306	LG 874
285-821	09-804	LG 233
285-866	48-205	LG 694
285-878	82-679	LG 870
285-886	82-495	LG 870
285-895	82-680	LG 870
285-920	48-145	LG 698
285-928	82-518	LG 897
285-936	82-408	LG 878
285-940	82-307-0	LG 874
285-952	76-100	LG 939
285-957	09-801	LG 229
290-015	60-860	LG 701
290-023	60-209	LG 700
290-064	60-408	LG 700
290-080	60-106	LG 701
290-102	46-300	LG 717
290-106	60-400	LG 700
290-110	60-220	LG 708
290-134	46-050	LG 711
290-155	60-046	LG 700
290-163	60-036	LG 701
290-175	60-420	LG 717
290-183	60-420	LG 717
290-191	60-427	LG 717
290-195	60-188	LG 718
290-203	60-426	LG 699
290-213	46-310	LG 713
290-245	46-325	LG 701
290-249	60-004	LG 701
290-253	60-000	LG 702
290-278	46-321	LG 707
290-282	60-003	LG 710
290-286	60-124	LG 710
290-288	60-160	LG 701
290-296	60-409	LG 700
290-316	60-002	LG 710
290-387	46-315	LG 717
290-411	60-991	LG 718
290-427	46-051	LG 712
290-435	46-302	LG 709
290-443	46-306	LG 708
290-451	46-319	LG 712
290-595	60-410	LG 703
290-623	46-322	LG 701

2019 Aftermarket X-Reference

STENS

PART No.	OREGON	Page
290-835	60-122	LG 721
290-899	60-014	LG 712
290-904	46-006	LG 712
295-014	74-732	LG 721
295-048	74-317	LG 721
295-055	74-054	LG 721
295-063	74-072	LG 721
295-174	79-000	LG 802
295-240	81-012	LG 802
295-261	02-107	LG 723
295-262	02-107	LG 723
295-279	02-115	LG 723
295-280	02-115	LG 723
295-287	02-099	LG 722
295-288	02-099	LG 722
295-295	02-098	LG 722
295-296	02-098	LG 722
295-547	60-012-0	LG 712
300-012	90-143	LG 368
300-020	90-144	LG 368
300-038	90-145	LG 368
300-046	90-146	LG 368
300-300	69-260-0	
300-304	69-261-0	
300-308	69-262-0	
300-509	90-622	LG 368
300-513	95-042	LG 468
300-517	90-621	LG 368
300-525	90-620	LG 368
300-529	95-041	LG 401
300-565	95-082	LG 372
300-722	97-021	LG 524
300-766	95-099	LG 400
300-914	91-266	LG 431
302-076	96-630	LG 556
302-204	96-343	LG 395
302-244	596-329	LG 578
302-248	96-346	LG 449
302-256	596-306	LG 487
302-260	96-309	LG 488
302-268	96-620	LG 551
302-284	96-600	LG 569
302-288	596-332	LG 484
302-400	96-900	LG 526
302-402	596-719	LG 488
302-404	98-629	LG 412
302-408	96-615	LG 461
302-410	95-601	LG 423
302-412	91-938	LG 514
302-414	96-332	LG 484
302-420	92-676	LG 491
302-422	96-401	LG 404
302-424	596-601	LG 474
302-426	96-370	LG 533
302-428	598-640	LG 405
302-430	95-605	LG 463
302-436	595-609	LG 461
302-438	96-354	LG 484
302-440	92-616	LG 485
302-444	92-675	LG 484
302-456	92-615	LG 491
302-460	396-709	LG 489
302-462	96-607	LG 571
302-470	98-631	LG 390
302-480	97-601	LG 527
302-536	596-900	LG 380
302-615	396-716	LG 451
302-616	96-310	LG 444
302-617	96-308	LG 456
302-619	96-322	LG 567
302-620	96-319	LG 415
302-621	96-347	LG 387
302-623	96-749	LG 433
302-624	94-620	LG 414
302-625	96-699	LG 442
302-630	96-363	LG 499
302-636	96-701	LG 568
302-648	96-346	LG 449
302-660	596-808	LG 472
302-686	96-708	LG 571
302-690	96-306	LG 538
302-694	96-802	LG 568
302-717	96-323	LG 477
302-718	392-206	LG 436
302-720	92-915	LG 440
302-817	96-308	LG 456
302-818	96-344	LG 536
302-820	96-319	LG 415
302-821	96-347	LG 387
302-821	96-702	LG 491
302-822	96-749	LG 433
302-825	396-764	LG 537
302-827	392-057	LG 443
302-827	92-911	LG 442
302-835	96-363	LG 499
302-837	96-372	LG 500
303-052	91-256	LG 437
303-060	91-308	LG 467
303-104	596-310	LG 447
303-108	96-308	LG 456
303-112	596-323	LG 453
303-116	96-344	LG 536
303-120	596-319	LG 415
303-124	596-347	LG 448
303-128	396-752	LG 415
303-136	91-183	LG 370
303-144	91-505	LG 477
303-148	94-053	LG 503
303-168	99-127	LG 375
303-184	91-378	LG 414
303-188	91-308	LG 467
303-196	91-254	LG 456
303-324	596-319	LG 415
303-332	596-347	LG 448
303-336	396-726	LG 391
303-348	596-310	LG 447
303-392	396-735	LG 452
303-396	596-323	LG 453
305-589	191-015	LG 372
305-599	96-005	
305-603	91-003	LG 370
305-730	91-005	LG 458
305-771	91-003	LG 370
30-872	98-099	LG 412
310-003	93-005	LG 447
310-011	93-006	LG 444
310-033	93-005	LG 447
310-045	93-005	LG 447
310-052	93-006	LG 444
310-078	93-008	LG 510
310-086	93-011	LG 557
310-102	93-009	LG 476
310-110	93-010	LG 432
310-300	91-096	LG 389
310-326	91-097	LG 388
310-366	91-117	LG 475
310-410	91-034	LG 583
315-006	91-500	LG 416
315-018	91-146	LG 419
315-036	91-167	LG 416
315-250	90-109	LG 414
315-254	91-507	LG 415
315-499	91-515	LG 415
315-511	92-038	LG 392
315-762	91-342	LG 447
315-792	91-253	LG 415
315-868	91-183	LG 370
315-872	91-209	LG 552
315-876	91-235	LG 461
320-006	91-547	LG 449
320-010	91-536	LG 395
320-014	91-534	LG 578
320-018	91-531	LG 393
320-026	91-544	LG 397
320-028	91-557	LG 545
320-036	91-532	LG 448
320-040	91-532	LG 448
320-044	91-558	LG 448
320-048	91-558	LG 448
320-406	92-158	LG 453
320-410	92-416	LG 456
320-507	91-244	LG 450
320-515	91-242	LG 371
320-519	91-254	LG 456
320-564	91-253	LG 415
320-564	91-255	LG 454
325-001	91-291	LG 457
325-005	91-444	LG 457
325-009	91-516	LG 457
325-013	91-517	LG 457
325-017	91-516	LG 457
325-100	92-101	LG 458
325-104	92-102	LG 458
325-134	91-327	LG 404
325-142	91-330	LG 513
325-175	91-329	LG 409
325-179	92-015	LG 407
325-183	198-086	LG 565
325-278	98-081	LG 406
325-286	91-057	LG 409
325-290	98-087	LG 407
325-294	98-080	LG 512
325-298	98-082	LG 513
325-302	98-083	LG 404
325-442	91-073	LG 512
325-735	91-058	LG 411
325-742	91-057	LG 409
325-746	91-056	LG 406
325-827	92-140	LG 516
325-837	91-414	LG 405
325-841	91-333	LG 406
325-845	91-415	LG 406
325-849	91-440	LG 408
325-856	91-332	LG 412
325-908	91-442	LG 518
330-005	91-435	LG 498
330-149	99-127	LG 375
330-150	92-144	LG 485
330-213	91-364	LG 481
330-217	91-363	LG 481
330-266	91-389	LG 538
330-282	91-391	LG 489
330-290	191-392	LG 488
330-302	92-025	LG 440
330-308	91-393	LG 485
330-316	91-400	LG 488
330-324	91-399	LG 493
330-356	91-448	LG 482
330-357	91-394	LG 489
330-365	91-380	LG 538
330-369	90-348	LG 484
330-373	91-381	LG 483
330-377	91-449	LG 492
330-389	91-383	LG 484
330-393	91-384	LG 487
330-401	91-404	LG 487
330-405	91-401	LG 483
330-429	91-443	LG 489
330-437	91-138	LG 488
330-441	192-106	LG 491
330-445	92-104	LG 485
330-453	92-119	LG 492
330-489	90-354	LG 488
330-501	92-113	LG 490
330-505	92-114	LG 493
330-542	91-436	LG 498
330-552	91-438	LG 500
330-555	91-430	LG 497
330-587	91-587	LG 490
330-591	91-078	LG 490
330-595	91-138	LG 488
330-615	191-139	LG 491
330-619	191-108	LG 484
330-688	91-395	LG 493
330-704	92-103	LG 487
330-724	92-109	LG 489
330-728	92-110	LG 491
330-736	91-403	LG 488
330-742	90-354	LG 488
330-823	92-049	LG 500
330-827	92-116	LG 500
330-845	92-011	LG 490
330-872	98-093	LG 411
3339	91-255	LG 454
335-008	97-010	LG 524
335-012	97-118	LG 524
335-016	97-119	LG 525
335-030	97-006	LG 525
335-038	97-123	LG 537
335-042	99-121	LG 551
335-050	97-017	LG 537
335-059	97-330	LG 528
335-063	97-014	LG 527
335-067	98-499	LG 519

STENS

PART No.	OREGON	Page
335-069	91-129	LG 396
335-071	97-024	LG 525
335-075	97-018	LG 523
335-083	98-002	LG 401
335-117	98-487	LG 513
335-125	98-486	LG 512
335-166	97-109	LG 525
335-168	91-313	LG 494
335-170	98-496	LG 515
335-174	97-105	LG 523
335-182	97-107	LG 524
335-214	198-049	LG 518
335-240	99-107	LG 551
335-307	99-112	LG 556
335-315	99-113	LG 528
335-331	99-117	LG 556
335-356	99-103	LG 551
335-414	79-724	LG 556
335-422	79-728	LG 556
335-471	97-005	LG 527
335-475	97-003	
335-479	97-004	
335-524	97-105	LG 523
335-525	98-057	LG 513
335-533	98-056	LG 512
335-553	98-056	LG 512
335-570	98-019	LG 516
335-586	198-052	LG 389
335-608	98-051	LG 521
335-624	198-058	LG 517
335-628	98-005	LG 521
335-632	98-050	LG 521
335-650	98-064-1	LG 514
335-653	98-037	LG 574
335-665	98-068	LG 389
335-677	98-098	LG 410
335-691	198-063	LG 513
335-695	98-061	LG 404
335-707	198-059	LG 403
335-711	198-153	LG 520
335-715	98-066	LG 409
335-719	98-054	LG 574
335-723	98-069	LG 404
335-757	98-096	LG 404
335-760	97-016	LG 524
335-764	97-020	LG 526
335-778	97-015	LG 527
335-790	98-537	LG 516
335-810	97-105	LG 523
335-814	98-007	LG 401
335-822	97-001	LG 527
335-855	98-072	LG 408
335-859	198-086	LG 565
335-869	97-110	LG 525
335-877	98-044	LG 409
335-943	98-001	LG 517
340-008	95-023	LG 380
340-012	95-024	LG 465
340-016	95-034	LG 377
340-022	95-031	LG 377
340-030	95-045	LG 374
340-034	95-014	LG 374
340-038	95-052	LG 398
340-042	95-015	LG 400
340-054	195-019	LG 466
340-062	195-021	LG 468
340-066	195-005	LG 373
340-070	95-052	LG 398
340-079	195-003	LG 400
340-091	95-068	LG 376
340-099	91-628	LG 387
340-109	91-620	LG 470
340-113	91-621	LG 563
340-117	91-626	LG 552
340-121	91-623	LG 485
340-125	95-027	LG 398
340-129	91-627	LG 482
340-130	91-627	LG 482
340-137	195-021	LG 468
340-145	95-006	LG 397
340-149	95-018	LG 399
340-153	95-036	LG 463
340-157	95-051	LG 465
340-158	91-312	LG 478
340-162	195-033	LG 400
340-166	95-026	LG 376
340-170	95-047	LG 378
340-172	99-126	LG 501
340-178	195-032	LG 425
340-218	95-044	LG 465
340-220	91-505	LG 477
340-222	195-062	LG 376
340-226	195-072	LG 530
340-230	195-070	LG 469
340-248	95-057	LG 380
3403	94-125	LG 563
340-440	195-048	LG 430
340-570	95-011	
340-622	95-073	LG 533
340-700	94-045	LG 571
340-878	91-637	LG 507
340-882	91-638	LG 426
345-037	94-322	LG 520
345-070	91-706	LG 550
345-074	92-147	LG 559
345-085	91-585	LG 493
345-102	91-701	LG 545
345-106	91-723	LG 508
345-108	91-713	LG 422
345-116	91-714	LG 543
345-124	91-715	LG 541
345-156	94-029	LG 414
345-165	94-032	LG 568
345-173	94-127	LG 569
345-177	94-040	LG 573
345-231	91-705	LG 540
345-235	91-703	LG 541
345-314	94-011	LG 572
345-397	94-017	LG 441
345-409	91-079	LG 485
345-411	91-610	LG 554
345-413	94-021	LG 573
345-421	94-019	LG 570
345-429	94-051	LG 570
345-447	94-038	LG 568
345-454	94-026	LG 369
345-462	94-022	LG 565
345-486	94-039	LG 561
345-496	94-770	LG 569
345-672	91-766	LG 579
345-762	91-766	LG 579
345-769	91-762	LG 578
345-777	91-761	LG 578
345-785	91-764	LG 579
350-098	98-071	LG 411
350-108	91-804	LG 560
350-116	91-805	LG 560
350-124	91-806	LG 447
350-148	95-076	LG 404
350-169	92-742	LG 475
350-181	92-039	LG 470
350-199	91-502	LG 477
350-203	98-094	LG 514
350-211	95-085	LG 462
350-219	94-063	LG 564
350-223	94-059	LG 564
350-227	94-069	LG 441
350-372	98-091	LG 516
350-450	91-482	LG 434
350-458	95-087	LG 460
350-528	92-139	LG 398
350-671	90-208	LG 502
350-675	90-207	LG 472
350-683	90-205	LG 501
350-687	92-045	LG 474
350-691	90-206	LG 414
350-695	92-208	LG 472
355-008	91-313	LG 494
355-016	91-181	LG 495
355-022	91-218	LG 420
355-024	91-913	LG 576
355-028	91-368	LG 460
355-032	91-912	LG 576
355-036	91-264	LG 473
355-044	91-312	LG 478
355-052	91-217	LG 558
355-061	91-256	LG 437
355-079	91-335	LG 420
355-085	91-369	LG 434
355-089	91-373	LG 383
355-100	94-052	LG 573
355-105	91-311	LG 439
355-117	91-374	LG 442
355-121	91-368	LG 460
355-177	492-730	LG 440
355-189	492-732	LG 442
355-201	92-910	LG 443
355-205	91-311	LG 439
355-229	92-029	LG 435
355-233	91-188	LG 439
355-275	92-027	LG 432
355-279	92-084	LG 442
355-283	92-033	LG 442
355-287	92-031	LG 433
355-291	92-030	LG 567
355-295	92-028	LG 433
355-331	91-506	LG 473
355-335	92-029	LG 435
355-339	92-030	LG 567
355-343	92-031	LG 433
355-347	92-033	LG 442
355-411	492-731	LG 436
355-411	92-912	LG 436
355-419	92-913	LG 438
355-707	198-059	LG 403
355-709	91-918	LG 576
355-709	91-920	LG 576
355-713	91-919	LG 576
365-015	86-005	LG 782
365-023	86-001	LG 781
365-023	86-009	LG 781
365-047	86-019	LG 781
365-080	86-008	LG 782
365-221	86-033	LG 781
370-302	84-102	LG 954
370-306	84-103	LG 954
370-350	84-101	LG 954
373-017	89-001	LG 590
373-018	89-001	LG 590
373-193	40-707	LG 590
375-014	40-402	LG 589
375-022	40-403	LG 589
375-022	40-409	LG 585
375-030	40-502	LG 586
375-048	40-807	LG 585
375-071	40-411	LG 589
375-147	40-514	LG 589
375-162	40-503	LG 589
375-170	40-518	LG 589
375-200	40-141	LG 585
375-214	40-130	LG 586
375-222	40-131	LG 586
375-230	40-502	LG 586
375-247	40-514	LG 589
375-258	40-518	LG 589
375-262	40-503	LG 589
375-270	40-518	LG 589
375-271	40-316	LG 586
375-287	40-316	LG 586
375-301	40-139	LG 584
375-311	40-843	LG 588
375-352	40-131	LG 586
375-360	40-130	LG 586
375-364	40-141	LG 585
375-382	40-140	LG 584
375-410	40-121	LG 584
375-444	40-010	LG 588
375-485	40-845	LG 588
375-489	40-402	LG 589
375-493	40-411	LG 589
375-525	40-840	LG 588
375-661	40-147	LG 588
380-010	19-044	LG 983
380-011	19-043	LG 983
380-012	19-042	LG 983
380-014	19-041	LG 983
380-135	69-195	LG 980
380-139	69-196	LG 980
380-2043	69-173	LG 981
380-2123	69-174	LG 981
380-2203	69-175	LG 981
380-228	20-020	LG 979
380-232	20-021	LG 979
380-236	20-022	LG 979

X

2019 Aftermarket X-Reference

STENS

PART No.	OREGON	Page
380-2383	69-176	LG 981
380-242	21-265	LG 981
380-246	21-280	LG 981
380-250	21-295	LG 981
380-254	21-205	LG 981
380-303	21-365	LG 981
380-311	21-380	LG 981
380-315	20-026	LG 979
380-319	20-027	LG 979
380-323	20-028	LG 979
380-329	21-395	LG 981
380-333	20-023	LG 979
380-337	21-330	LG 981
380-341	20-024	LG 979
380-345	21-305	
380-349	20-025	LG 979
380-410	21-180	LG 981
380-422	22-195	LG 980
380-426	22-105	LG 980
380-428	21-195	LG 981
380-436	21-105	LG 981
380-444	21-131	LG 981
380-455	22-130	LG 980
380-459	22-595	LG 980
380-463	22-505	LG 980
380-467	22-530	LG 980
380-469	21-595	LG 981
380-477	21-505	LG 981
380-485	21-530	LG 981
380-511	22-280	LG 980
380-512	22-295	LG 980
380-524	22-330	LG 980
380-531	22-180	LG 980
380-541	22-580	LG 980
380-625	21-355	LG 981
380-635	21-155	LG 981
380-641	21-580	LG 981
380-645	21-555	LG 981
380-695	19-005	LG 983
380-773	22-205	LG 980
380-777	22-380	LG 980
380-781	22-395	LG 980
380-785	22-305	LG 980
380-801	69-171	LG 981
380-811	21-980	LG 981
380-812	21-995	LG 981
380-821	21-480	LG 981
380-831	21-880	LG 981
380-832	21-895	LG 981
380-833	21-805	LG 981
380-842	21-095	LG 981
380-843	21-005	LG 981
380-844	21-030	LG 981
385-070	55-336	LG 986
385-074	55-349	LG 986
385-100	55-741	LG 1019
385-108	55-297	LG 986
385-112	55-002-1	LG 993
385-199	55-166	
385-204	15-302	LG 271
385-204	55-302-1	LG 992
385-272	55-286	LG 992
385-284	55-294	LG 986
385-288	55-265	LG 986
385-427	55-984	LG 991
385-429	55-053	
385-430	55-284	LG 992
385-451	55-182	LG 1023
385-505	55-804-1	LG 994
385-563	55-971	LG 988
385-567	55-996	LG 988
385-571	55-973	LG 988
385-575	55-972	LG 988
385-637	55-743	LG 988
385-637	55-821	LG 988
385-641	55-807	LG 994
385-649	55-816	LG 988
385-698	55-406-0	LG 995
385-730	55-140-0	LG 989
385-738	55-145-1	LG 989
385-752	55-147-1	
385-829	55-355-1	LG 994
385-833	55-356-0	LG 994
385-837	55-357-1	LG 994
385-853	55-491	LG 996
385-861	55-993	LG 988
385-904	55-812	LG 1022
385-906	55-803	LG 1022
390-039	55-460-1	LG 1026
390-223	55-106	LG 773
390-294	05-072	LG 1023
390-380	55-326	LG 1021
395-004	41-922	LG 1014
395-038	41-924	LG 1014
395-046	41-925	LG 1014
395-095	41-923	LG 1014
395-129	41-921	LG 1014
395-137	41-920	LG 1014
395-202	41-923	LG 1014
395-210	41-925	LG 1014
395-329	41-933	LG 1014
395-337	41-931	LG 1014
395-345	41-937	LG 1014
400-111	65-225	LG 341
400-283	65-229	LG 342
400-465	65-221	LG 341
400-489	65-228	LG 341
405-217	65-206	LG 342
405-221	65-007	LG 342
405-399	65-208	LG 342
405-403	65-230	LG 342
405-435	65-006	LG 340
405-630	65-224	LG 341
410-066	04-125	LG 694
410-294	48-141	LG 249
410-308	09-802	LG 233
416-818	02-901	LG 853
418-293	33-312	LG 743
418-301	33-313	LG 743
418-467	33-301	LG 743
418-715	02-531	
420-026	73-351	LG 843
420-046	73-560	LG 844
420-046	73-561	LG 843
420-111	73-819	LG 843
420-179	73-564-0	LG 843
425-033	47-050	LG 744
425-041	47-080	LG 744
425-058	47-120	LG 744
425-066	47-160	LG 744
425-074	47-200	LG 744
425-116	47-689	LG 743
425-124	47-014	LG 743
425-181	47-038	LG 743
425-215	47-081	LG 744
425-223	47-121	LG 744
425-231	47-161	LG 744
425-249	47-201	LG 744
425-264	47-051	LG 744
425-272	33-070	LG 742
425-306	33-038	LG 742
425-350	33-500-0	LG 744
425-504	33-035	LG 742
425-508	33-034	LG 742
425-512	33-033	LG 742
425-520	33-032	LG 742
425-524	33-031	LG 742
430-009	42-008	LG 945
430-013	33-395	LG 943
430-013	33-396	LG 944
430-017	33-207	LG 949
430-029	33-024	LG 945
430-066	33-206	LG 949
430-070	33-388	LG 943
430-110	33-398	LG 944
430-116	33-240	LG 948
430-128	33-377	LG 943
430-144	33-391	LG 945
430-161	33-392	LG 944
430-165	33-021	LG 950
430-173	33-397	LG 942
430-249	33-393	LG 943
430-300	33-317-0	LG 729
430-386	33-256	LG 946
430-401	33-002	LG 946
430-401	33-082	LG 946
430-405	33-015	LG 948
430-409	33-027	LG 947
430-445	33-376	LG 942
430-461	33-090	LG 948
430-492	33-089	LG 946
430-504	33-390	
430-508	33-384	LG 947
430-512	33-388	LG 943
430-512	33-389	LG 945
430-520	33-387	LG 945
430-538	33-386	LG 942
430-602	33-013	LG 949
430-662	33-394	LG 944
430-670	42-009	LG 945
430-674	33-383	LG 944
430-686	33-028	LG 947
430-690	33-019	LG 948
430-694	33-099	LG 946
430-702	33-026	LG 947
430-770	33-399	LG 944
430-789	33-083	LG 947
430-798	33-081	LG 946
430-810	33-410	LG 947
430-962	33-023	LG 949
435-008	33-332	LG 730
435-012	33-743	LG 918
435-020	33-733	LG 917
435-024	33-400	LG 732
435-032	33-330	LG 729
435-032	33-337	LG 730
435-040	33-320-0	LG 731
435-061	33-417	LG 731
435-065	33-335	LG 730
435-081	33-401	LG 732
435-097	33-331	LG 730
435-099	33-334	LG 730
435-103	33-334	LG 730
435-107	33-702	LG 919
435-115	33-415	LG 741
435-175	33-411	LG 732
435-195	33-402	LG 731
435-211	33-029-1	LG 927
435-227	33-418	LG 731
435-268	33-407	LG 732
435-295	33-740	LG 916
435-299	33-719	LG 915
435-303	33-700	LG 915
435-303	33-708	LG 915
435-303	33-770	LG 915
435-303	33-778	LG 915
435-307	33-771	LG 916
435-311	33-716	LG 921
435-315	33-712	LG 921
435-331	33-714	LG 918
435-351	33-713	LG 921
435-351	33-739	LG 921
435-355	33-711	LG 921
435-355	33-791	LG 921
435-371	33-730	LG 917
435-371	33-793	LG 918
435-375	33-729	LG 917
435-431	33-430	LG 729
435-435	33-336	LG 730
435-435	33-431	LG 729
435-461	33-430	LG 729
435-479	33-715	LG 919
435-487	33-710	LG 918
435-495	33-704	LG 919
435-495	33-774	LG 919
435-503	33-707	LG 920
435-503	33-777	LG 920
435-507	33-718	LG 919
435-511	33-722	LG 918
435-535	33-761	LG 926
435-563	33-419	LG 732
435-615	33-738	LG 921
435-815	33-759-0	LG 926
435-831	33-762-0	LG 926
435-843	33-526	LG 928
435-847	33-768-0	LG 926
435-851	33-527	LG 928
435-859	33-006	LG 927
435-907	33-735	LG 917
440-044	33-150	LG 787
440-101	33-521	LG 785
440-105	33-348	LG 785
440-401	33-340	LG 784
440-409	33-342	LG 784

X

STENS

PART No.	OREGON	Page
440-417	33-344	LG 784
440-425	33-341	LG 784
440-433	33-347	LG 784
440-441	33-345	LG 784
440-445	33-352-0	LG 784
440-465	33-053	LG 789
440-505	33-346	LG 786
445-039	02-405	LG 790
445-064	02-402	LG 790
445-064	02-407	LG 790
445-232	02-406	LG 790
445-236	02-403	LG 790
450-007	33-182-0	LG 789
450-148	33-601	LG 789
450-239	33-606	LG 789
450-403	33-628	LG 789
455-147	33-016	LG 789
455-162	33-008	LG 789
460-006	33-365	LG 784
460-014	33-362	LG 784
460-048	33-333	LG 786
460-063	33-363	LG 787
465-005	50-544	LG 747
465-009	50-545	LG 748
465-013	50-027	LG 747
465-013	50-448	LG 748
465-017	50-546	LG 748
465-021	50-542	LG 747
465-025	50-025-0	LG 747
465-029	50-543	LG 748
465-043	50-435	LG 747
465-054	50-541	LG 747
465-328	50-041	LG 757
465-344	50-043	LG 757
465-393	50-548	LG 759
465-443	50-032	LG 759
465-450	50-033	LG 759
465-674	50-556	LG 753
465-678	50-553	LG 752
465-682	50-554	LG 753
465-758	50-555	LG 753
470-005	50-101	LG 746
470-037	49-114	LG 746
470-088	49-115	LG 746
470-228	50-452	LG 753
470-232	50-450	LG 753
470-236	50-455	LG 753
470-419	50-204	LG 758
475-020	49-112	LG 749
475-192	49-161	LG 747
475-446	50-432	LG 753
475-450	50-431	LG 753
480-016	50-408	LG 745
480-028	50-410	LG 745
480-083	50-409	LG 745
480-091	49-412	LG 745
480-149	50-412	LG 745
480-363	50-415	LG 751
480-367	50-414	LG 751
480-375	50-416	LG 751
480-379	50-418	LG 751
480-383	50-417	LG 751
480-403	50-419	LG 751
485-023	49-069	LG 746
485-037	02-644-0	LG 748
485-060	49-099	LG 748
485-110	49-355	LG 746
485-140	49-190	LG 752
485-148	49-187	LG 752
485-173	49-189	LG 752
485-181	49-185	LG 752
485-185	49-127	LG 746
485-189	49-184	LG 752
485-326	49-084	LG 759
485-334	49-123	LG 746
485-395	49-183	LG 752
485-399	49-191	LG 752
485-585	49-018	LG 728
485-706	49-402	LG 758
485-714	49-153	LG 758
485-722	49-150	LG 758
485-748	49-014	LG 759
485-755	49-403	LG 758
485-771	49-411	LG 759
485-789	49-016	LG 759
485-862	49-841	LG 626
485-904	49-157	LG 759
485-920	49-031	LG 746
485-995	49-095	LG 746
486-076	50-502	LG 756
486-255	49-129	LG 745
486-385	49-109	LG 748
486-503	50-423	LG 753
486-507	50-426	LG 753
486-511	50-425	LG 753
490-250	49-083	LG 913
495-002	49-041-0	LG 749
495-010	49-040-0	LG 749
495-028	49-045	LG 749
495-044	49-047	LG 749
495-055	49-204	LG 749
495-234	49-041-0	LG 749
495-703	49-208	LG 756
495-707	49-193	LG 756
495-711	49-207	LG 756
500-009	36-001	
500-074	36-005	LG 750
500-229	36-043	LG 754
500-233	36-044	LG 754
500-241	36-045	LG 754
500-245	36-046	LG 754
500-645	36-022	LG 750
510-016	36-101	LG 750
510-032	36-100	LG 750
510-040	36-103	LG 750
510-057	36-102	LG 750
510-065	36-104	LG 750
510-510	36-141	LG 755
510-514	36-142	LG 755
510-518	36-143	LG 755
515-390	49-054	LG 632
515-454	36-244	LG 754
515-458	36-245	LG 754
515-462	36-246	LG 754
515-786	36-535	LG 755
515-790	36-531	LG 755
520-015	49-101	LG 602
520-035	49-225	LG 604
520-049	49-693	LG 602
520-072	49-071	LG 602
520-080	49-070	LG 604
520-106	49-008	LG 623
520-114	49-029	LG 609
520-164	49-102	LG 602
520-175	49-007	LG 622
520-213	49-101	LG 602
520-213	49-401	LG 605
520-239	49-133	LG 609
520-247	49-229	LG 609
520-304	49-201	LG 608
520-312	49-239	LG 609
520-336	49-230	LG 609
520-338	49-840	LG 609
520-350	49-700	LG 605
520-516	49-305	LG 603
520-522	49-078	LG 603
520-526	49-149	LG 604
520-590	07-700	LG 767
520-630	49-989	LG 602
520-702	50-673	LG 597
520-718	50-670	LG 597
520-722	50-638	LG 596
520-722	50-668	LG 597
520-726	50-634	LG 597
520-730	50-669	LG 597
520-734	49-915	LG 597
520-738	50-637	LG 597
520-902	49-242	LG 624
520-902	50-640	LG 598
520-906	50-664	LG 600
520-922	50-646	LG 598
525-030	49-077	LG 628
525-063	49-033	LG 628
525-200	49-363	LG 624
525-204	49-039	LG 629
525-212	49-025	LG 629
525-212	49-916	LG 629
525-265	49-916	LG 629
525-281	49-209	LG 625
525-291	49-210	LG 628
525-303	49-035	LG 629
525-329	53-005	LG 632
525-390	49-054	LG 632
525-414	49-913	LG 624
525-422	49-995	LG 625
525-422	49-999	LG 626
525-554	49-997	LG 628
525-638	49-914	LG 165
525-691	49-912	LG 624
525-691	49-992	LG 624
525-699	49-996	LG 629
525-806	49-308	LG 625
525-808	49-307	LG 625
525-816	49-009	LG 625
525-840	49-036	LG 628
525-899	49-214	LG 624
525-901	49-038	LG 628
527-111	49-304	LG 603
527-705	49-300	LG 626
530-006	49-004	LG 622
530-014	49-003	LG 622
530-018	49-001	LG 622
530-030	49-006	LG 622
530-048	49-005	LG 622
530-055	49-213	LG 623
530-204	49-002	LG 623
530-228	49-037	LG 622
600-223	33-243	LG 786
600-227	33-244	LG 786
6026	95-094	LG 469
605-046	30-149	LG 211
605-059	30-148	LG 198
605-071	55-236	LG 213
605-105	55-211	LG 191
605-121	55-207	LG 191
605-139	55-610	LG 191
605-204	55-218	LG 209
605-208	30-153	LG 216
605-224	55-245	LG 215
605-228	30-153	LG 216
605-228	55-249	LG 215
605-238	55-214	LG 209
605-246	55-212	LG 209
605-341	30-170	LG 198
605-402	55-226	LG 212
605-428	55-613	LG 211
605-436	55-612	LG 211
605-448	55-263	LG 214
605-531	30-333	LG 216
605-691	55-241	LG 214
605-709	55-240	LG 214
605-713	55-248	LG 215
605-717	55-243	LG 215
605-725	55-242	LG 214
605-733	55-236	LG 213
605-741	30-838	LG 215
605-741	55-244	LG 215
605-805	30-155	LG 213
610-006	07-207	LG 779
610-022	07-201	LG 779
610-055	07-205	LG 779
610-063	07-215	LG 776
610-079	55-157	LG 763
610-089	07-200	LG 778
610-121	07-007	LG 689
610-170	07-109	LG 778
610-174	07-208	LG 779
610-178	07-209	LG 779
610-182	07-210	LG 779
610-186	07-211	LG 779
610-212	07-008	LG 762
610-220	07-213	LG 777
610-224	55-246	LG 214
610-238	07-009	LG 762
610-295	56-019	LG 772
610-345	07-004	LG 769
610-381	07-066	LG 778
610-381	07-206	LG 776
610-393	07-214	LG 779
610-717	07-219	LG 779
615-005	49-801	LG 610
615-013	49-802	LG 610
615-021	49-804	LG 610
615-039	49-800	LG 610

2019 Aftermarket X-Reference

STENS

PART No.	OREGON	Page
615-047	50-607	LG 595
615-054	49-827	LG 608
615-058	49-833	LG 611
615-078	49-898	LG 618
615-082	49-285	LG 617
615-082	49-891-0	LG 617
615-086	49-440	LG 618
615-090	49-857	LG 619
615-094	49-894	LG 619
615-098	49-884	LG 619
615-102	49-859	LG 616
615-104	49-803	LG 610
615-108	49-883	LG 618
615-112	49-805	LG 609
615-120	49-825	LG 606
615-128	50-619	LG 595
615-132	50-620	LG 595
615-211	49-021	LG 629
615-215	49-282	LG 619
615-223	50-603	LG 595
615-227	49-904	LG 614
615-229	49-023	LG 629
615-237	49-834	LG 611
615-241	49-880	LG 617
615-245	49-816	LG 612
615-253	49-903	LG 615
615-269	49-881	LG 618
615-277	49-855	LG 617
615-286	49-810	LG 612
615-290	49-908	LG 614
615-294	49-902	LG 614
615-356	49-897	LG 617
615-360	49-822-0	LG 616
615-360	49-865	LG 616
615-362	49-819-0	LG 615
615-362	49-861	LG 615
615-364	49-866	LG 617
615-366	49-818-0	LG 615
615-368	49-856	LG 619
615-370	49-817-0	LG 616
615-370	49-864	LG 616
615-374	49-437	LG 614
615-378	49-286	LG 615
615-378	49-901	LG 615
615-382	50-621	LG 595
615-390	49-287	LG 620
615-401	49-835	LG 611
615-405	49-807	LG 611
615-419	49-806	LG 611
615-423	49-906	LG 615
615-435	49-809	LG 613
615-441	49-441	LG 618
615-443	49-812	LG 612
615-463	49-831	LG 612
615-466	49-854	LG 615
615-488	49-442	LG 619
615-500	55-342	LG 627
615-504	49-438	LG 615
615-546	49-873	LG 612
615-550	49-875	LG 612
615-554	49-877	LG 613
615-562	49-281	LG 613
615-570	49-832	LG 611
615-582	49-853	LG 611
615-641	55-342	LG 627
615-674	53-006	LG 632
615-690	55-333	LG 633
615-706	49-288	LG 619
615-736	49-026	LG 769
615-740	49-020	LG 631
615-740	49-026	LG 769
615-744	49-027	LG 769
615-748	55-187	LG 631
615-752	55-188	LG 631
615-756	55-189	LG 631
615-764	49-088-0	LG 631
615-776	49-283	LG 616
615-776	49-887-0	LG 616
615-780	49-284	LG 617
615-780	49-888-0	LG 617
615-788	49-444	LG 630
615-792	49-028	LG 769
615-796	49-443	LG 630
615-827	49-836-0	LG 616
615-831	49-829	LG 605
615-839	49-823-0	LG 618
615-839	49-867	LG 618
615-843	49-863	LG 616
615-852	49-847	LG 610
615-854	49-839	LG 613
615-856	49-852	LG 611
615-860	49-844	LG 612
615-864	49-849	LG 610
615-870	49-882-0	LG 613
615-873	49-316	LG 613
625-541	43-694	LG 936
625-541	43-699	LG 936
625-616	43-540	LG 936
625-620	43-562	LG 936
630-103	31-092	LG 931
635-052	56-011	LG 687
635-110	56-001	LG 687
635-177	04-008	LG 686
635-178	04-008	LG 686
635-243	56-002	LG 687
635-293	04-009	LG 686
635-300	04-006-0	LG 686
6410	94-132	LG 566
705-517	57-002	LG 677
705-574	57-005	LG 677
705-574	57-016	LG 677
705-574	57-017	LG 677
705-590	57-008	LG 677
705-608	57-003	LG 677
705-632	57-006	LG 677
750-026	42-452	LG 867
750-455	42-455	LG 721
750-931	81-020	LG 803
751-830	73-039	LG 846
752-864	42-007	LG 744
752-872	42-005	LG 744
752-998	75-910	LG 331
780-007	73-003	LG 847
780-023	73-001	LG 847
780-027	73-016	LG 846
780-031	73-006	LG 846
780-092	73-019	LG 849
780-104	73-018	LG 849
780-106	73-014	LG 849
780-110	73-017	LG 848
780-114	73-008	LG 848
780-122	73-013	LG 849
780-180	73-046	LG 847
780-188	73-023	LG 847
780-205	80-740	LG 852
780-213	80-741	LG 852
780-221	80-742	LG 852
780-226	80-017	LG 852
780-233	80-743	LG 852
780-237	80-746	LG 852
780-241	80-749	LG 853
780-257	73-059	LG 850
780-266	73-029	LG 847
780-282	73-028	LG 850
780-282	73-100	LG 850
780-299	80-747	LG 852
780-320	73-036	LG 849
780-324	73-037	LG 847
780-412	73-027	LG 850
780-416	73-020	LG 850
780-420	73-031	LG 850
780-420	73-826	
780-424	73-054	LG 848
780-428	73-057	LG 848
780-432	73-058	LG 848
780-436	73-055	LG 848
780-888	73-053	LG 850
780-892	73-052	LG 850
785-725	75-902	LG 331
890-200	55-185	LG 1027
890-244	55-994	LG 988
890-244	55-995	

SUNBELT

PART No.	OREGON	Page
B1073974	40-140	LG 584
B1112362	40-141	LG 585
B1112363	40-139	LG 584
B160011	33-317-0	LG 729
B1AC152	33-335	LG 730
B1AR1020	91-005	LG 458
B1BB101	41-925	LG 1014
B1BB102	41-923	LG 1014
B1BB113	41-920	LG 1014
B1BC1200	93-005	LG 447
B1BC1201	93-005	LG 447
B1BC1202	93-006	LG 444
B1BC1203	93-008	LG 510
B1BC1204	93-009	LG 476
B1BC1205	93-010	LG 432
B1BC1206	93-011	LG 557
B1BU1300	91-256	LG 437
B1CC1400	91-414	LG 405
B1CC1401	91-333	LG 406
B1CC1402	91-330	LG 513
B1CC1403	92-015	LG 407
B1CC1404	91-329	LG 409
B1CC1405	91-332	LG 412
B1CC1407	91-415	LG 406
B1CC1410	91-440	LG 408
B1CC1412	91-327	LG 404
B1CC1413	98-091	LG 516
B1CC1418	98-071	LG 411
B1CC1419	98-087	LG 407
B1CC1421	91-144	LG 454
B1CC1423	198-086	LG 565
B1CC1425	91-058	LG 411
B1CC1427	98-072	LG 408
B1CC1428	91-938	LG 514
B1CO128	89-001	LG 590
B1DC1500	91-502	LG 477
B1DC1501	91-506	LG 473
B1DC1502	91-502	LG 477
B1DC1503	91-503	LG 424
B1DC1506	91-509	LG 424
B1DC1507	91-515	LG 415
B1DC1510	91-507	LG 415
B1DC1511	91-508	LG 419
B1DX1602	91-167	LG 416
B1EM1800	91-311	LG 439
B1EM1802	91-312	LG 478
B1EM1803	91-135	LG 387
B1EM1810	91-335	LG 420
B1EM1815	91-368	LG 460
B1EM1816	91-373	LG 383
B1EM1817	91-369	LG 434
B1EM1850	91-374	LG 442
B1EM1870	492-726	LG 436
B1EM1878	392-203	LG 442
B1EM1880	92-031	LG 433
B1EM1890	92-026	LG 435
B1EM1891	92-027	LG 432
B1EM1892	92-028	LG 433
B1EP1001	95-014	LG 374
B1EP1003	95-015	LG 400
B1EP1004	95-024	LG 465
B1EP1005	95-023	LG 380
B1EP1006	95-031	LG 377
B1EP1007	95-034	LG 377
B1EP1008	95-036	LG 463
B1EP1009	195-033	LG 400
B1EP1010	195-032	LG 425
B1EP1011	195-005	LG 373
B1EP1012	195-003	LG 400
B1EP1013	95-027	LG 398
B1EP1014	95-018	LG 399
B1EP1015	95-006	LG 397
B1EP1016	95-038	LG 523
B1EP1018	95-051	LG 465
B1EP1019	195-021	LG 468
B1EP1021	95-049	LG 459
B1EP1022	95-050	LG 461
B1EP1023	195-019	LG 466
B1EP1025	95-044	LG 465
B1EP1026	95-052	LG 398
B1EP1027	95-045	LG 374
B1EP1029	95-057	LG 380
B1EP1031	95-045	LG 374
B1EP1035	195-062	LG 376
B1EP1040	95-068	LG 376
B1EP1050	195-072	LG 530
B1GH1900	91-558	LG 448
B1GH1901	91-532	LG 448
B1GH1902	91-547	LG 449

X

SUNBELT

PART No.	OREGON	Page
B1GH1903	91-128	LG 424
B1GH1904	91-531	LG 393
B1GH1905	91-534	LG 578
B1GH1906	91-535	LG 448
B1GH1908	91-536	LG 395
B1GR2001	91-253	LG 415
B1GR2002	91-244	LG 450
B1HN2100	91-291	LG 457
B1HS1001	90-205	LG 501
B1HS1002	90-206	LG 414
B1HS1003	90-207	LG 472
B1HS1004	90-208	LG 502
B1HS1005	92-038	LG 392
B1HS1009	91-308	LG 467
B1HS1010	92-037	LG 423
B1HS1011	92-045	LG 474
B1HV1013	95-058	LG 458
B1HV1016	99-127	LG 375
B1HV1017	195-070	LG 469
B1JD1038	92-118	LG 488
B1JD1039	91-138	LG 488
B1JD1040	91-078	LG 490
B1JD1042	91-138	LG 488
B1JD1043	96-354	LG 484
B1JD1044	90-348	LG 484
B1JD1046	92-119	LG 492
B1JD1047	91-395	LG 493
B1JD1049	90-309	LG 492
B1JD1051	91-079	LG 485
B1JD1052	90-354	LG 488
B1JD1091	92-110	LG 491
B1JD1092	92-113	LG 490
B1JD5000	91-389	LG 538
B1JD5003	91-380	LG 538
B1JD5004	91-384	LG 487
B1JD5006	91-381	LG 483
B1JD5007	91-443	LG 489
B1JD5008	91-394	LG 489
B1JD5009	91-383	LG 484
B1JD5011	91-393	LG 485
B1JD5015	91-403	LG 488
B1JD5016	91-398	LG 488
B1JD5101	191-392	LG 488
B1JD5105	91-400	LG 488
B1JD6012	91-448	LG 482
B1JD6013	91-449	LG 492
B1JD6014	191-108	LG 484
B1JD6015	191-139	LG 491
B1JD6016	192-106	LG 491
B1JD6017	92-104	LG 485
B1JD6018	92-114	LG 493
B1JD6019	92-103	LG 487
B1KU1020	91-433	LG 498
B1KU1021	91-438	LG 500
B1KU1022	91-436	LG 498
B1KU1024	92-049	LG 500
B1KU1025	92-116	LG 500
B1LB2300	92-011	LG 490
B1MA2400	98-019	LG 516
B1MA2401	98-487	LG 513
B1MA2402	198-063	LG 513
B1MA2404	98-044	LG 409
B1MA2406	98-499	LG 519
B1MA2407	98-537	LG 516
B1MA2409	98-007	LG 401
B1MA2410	98-496	LG 515
B1MA2411	98-057	LG 513
B1MA2412	98-056	LG 512
B1MA2413	198-058	LG 517
B1MA2414	198-059	LG 403
B1MA2415	198-052	LG 389
B1MA2416	198-153	LG 520
B1MA2417	198-049	LG 518
B1MA2418	98-050	LG 521
B1MA2420	98-005	LG 521
B1MA2421	98-051	LG 521
B1MA2423	98-068	LG 389
B1MA2424	98-069	LG 404
B1MA2425	98-054	LG 574
B1MA2428	98-002	LG 401
B1MA2430	98-066	LG 409
B1MA2431	98-061	LG 404
B1MA2432	98-064-1	LG 514
B1MAX122525	41-932	LG 1014
B1MU2600	97-105	LG 523
B1MU2601	97-015	LG 527
B1MU2602	96-005	
B1MU2604	97-107	LG 524
B1MU2605	97-105	LG 523
B1MU2608	97-330	LG 528
B1MU2609	97-109	LG 525
B1MU2610	97-010	LG 524
B1MU2611	97-006	LG 525
B1MU2612	97-123	LG 537
B1MU2613	97-118	LG 524
B1MU2615	97-005	LG 527
B1MU2616	97-004	
B1MU2617	97-003	
B1MU2619	97-008	LG 526
B1MU2620	97-014	LG 527
B1MU2621	97-001	LG 527
B1MU2623	97-017	LG 537
B1MU2628	97-013	LG 526
B1MU2629	97-012	LG 537
B1MU2631	97-119	LG 525
B1MU2632	97-018	LG 523
B1MU2634	97-024	LG 525
B1MU2637	97-021	LG 524
B1PD1014	95-602	LG 403
B1PD1022	96-346	LG 449
B1PD1023	96-394	LG 538
B1PD1024	96-332	LG 484
B1PD1028	98-600	LG 85
B1PD1030	96-620	LG 551
B1PD1031	94-618	LG 506
B1PD1038	396-770	LG 485
B1PD1039	96-364	LG 488
B1PD1044	92-675	LG 484
B1PD1045	92-676	LG 491
B1PD1054	396-719	LG 488
B1PD1062	396-738	LG 485
B1PD1063	396-734	LG 489
B1PD1065	396-775	LG 493
B1PD1068	396-771	LG 492
B1PD1072	95-601	LG 423
B1PD1073	96-900	LG 526
B1PD1074	96-615	LG 461
B1PD1095	98-629	LG 412
B1PD2000	97-606	LG 522
B1PD2001	597-602	LG 524
B1PD2002	97-604	LG 525
B1PD2007	96-323	LG 477
B1PD2015	96-341	LG 446
B1PD2037	96-628	LG 528
B1PD2038	96-630	LG 556
B1PD2039	96-633	LG 556
B1PD5003	97-601	LG 527
B1PD5005	96-310	LG 444
B1PD5006	96-308	LG 456
B1PD5008	96-344	LG 536
B1PD5009	96-319	LG 415
B1PD5010	396-702	LG 480
B1PD5010	96-702	LG 491
B1PD5016	92-615	LG 491
B1PD5017	92-616	LG 485
B1PD5018	396-743	LG 493
B1PD5023	96-394	LG 538
B1PD5024	96-618	LG 483
B1PD5026	96-306	LG 538
B1PD5039	96-364	LG 488
B1PD5041	396-730	LG 490
B1PD5044	92-675	LG 484
B1PD5045	92-676	LG 491
B1PD5051	94-615	LG 370
B1PD5054	396-719	LG 488
B1PD5063	396-734	LG 489
B1PD5068	396-771	LG 492
B1PD5073	96-900	LG 526
B1PD5125	396-352	LG 489
B1PD5138	396-770	LG 485
B1PD5144	96-346	LG 449
B1PD5145	596-808	LG 472
B1PD5146	92-617	LG 487
B1PD5147	96-372	LG 500
B1PD5148	96-363	LG 499
B1PD5206	396-702	LG 480
B1SB10066	97-022	LG 524
B1SB10071	91-256	LG 437
B1SB10636	91-073	LG 512
B1SB10928	94-051	LG 570
B1SB1100	91-500	LG 416
B1SB11229	92-033	LG 442
B1SB11231	92-029	LG 435
B1SB11244	92-084	LG 442
B1SB11267	96-322	LG 567
B1SB11279	96-321	LG 436
B1SB1137	40-408	LG 589
B1SB1138	40-402	LG 589
B1SB1139	40-411	LG 589
B1SB1143	40-403	LG 589
B1SB11469	96-749	LG 433
B1SB1147	40-807	LG 585
B1SB1148	40-409	LG 585
B1SB11495	92-030	LG 567
B1SB11821	94-068	LG 441
B1SB12122	95-084	LG 494
B1SB12123	95-087	LG 460
B1SB12124	95-085	LG 462
B1SB12125	95-086	LG 425
B1SB1927	33-320-0	LG 731
B1SB2012	97-016	LG 524
B1SB2078	91-714	LG 543
B1SB2120	91-391	LG 489
B1SB2148	40-316	LG 586
B1SB2658	40-843	LG 588
B1SB2661	40-845	LG 588
B1SB2669	40-132	LG 586
B1SB2670	40-131	LG 586
B1SB2671	40-130	LG 586
B1SB2672	40-130	LG 586
B1SB2673	40-503	LG 589
B1SB2690	95-011	
B1SB3329	93-025	LG 482
B1SB3346	91-342	LG 447
B1SB3356	98-037	LG 574
B1SB3377	91-557	LG 545
B1SB3386	91-430	LG 497
B1SB3390	97-110	LG 525
B1SB3393	94-039	LG 561
B1SB3395	94-038	LG 568
B1SB3423	91-911	LG 576
B1SB3424	91-539	LG 393
B1SB3469	91-352	LG 482
B1SB6019	98-486	LG 512
B1SB6020	91-501	LG 413
B1SB6035	91-123	LG 395
B1SB6046	90-622	LG 368
B1SB6060	91-003	LG 370
B1SB6061	91-003	LG 370
B1SB6066	91-097	LG 388
B1SB6068	91-096	LG 389
B1SB6088	91-508	LG 419
B1SB6171	91-254	LG 456
B1SB6172	40-121	LG 584
B1SB6173	91-417	LG 500
B1SB6178	91-218	LG 420
B1SB6185	91-126	LG 548
B1SB6194	91-253	LG 415
B1SB6210	91-764	LG 579
B1SB6216	91-188	LG 439
B1SB6217	91-170	LG 437
B1SB6254	191-015	LG 372
B1SB6256	94-127	LG 569
B1SB6271	94-040	LG 573
B1SB6272	93-013	LG 480
B1SB6276	40-840	LG 588
B1SB6279	40-703	LG 590
B1SB6285	91-239	LG 454
B1SB6327	91-399	LG 493
B1SB6328	91-399	LG 493
B1SB6401	91-547	LG 449
B1SB6402	91-544	LG 397
B1SB6403	91-533	LG 394
B1SB6430	91-517	LG 457
B1SB6431	91-516	LG 457
B1SB6434	91-766	LG 579
B1SB6448	98-065	LG 515
B1SB6467	91-762	LG 578
B1SB6762	40-951	LG 587
B1SB7934	33-337	LG 730
B1SB847	91-399	LG 493
B1SB851	91-804	LG 560
B1SB9171	91-503	LG 424
B1SB9988	91-368	LG 460

2019 Aftermarket X-Reference

SUNBELT

PART No.	OREGON	Page
B1SC2800	91-620	LG 470
B1SC2801	91-622	LG 536
B1SC2802	91-626	LG 552
B1SC2803	91-623	LG 485
B1SC2804	91-621	LG 563
B1SC2806	91-627	LG 482
B1SC2807	91-628	LG 387
B1SC3800	91-621	LG 563
B1SC3801	91-637	LG 507
B1SC3802	91-638	LG 426
B1SN3001	99-117	LG 556
B1SN3003	99-112	LG 556
B1SN3004	99-114	LG 555
B1SN3006	99-103	LG 551
B1SN3007	99-107	LG 551
B1SN3011	99-121	LG 551
B1SP2900	91-713	LG 422
B1SP2902	91-723	LG 508
B1SP2903	91-701	LG 545
B1SP2904	91-705	LG 540
B1SP2905	91-706	LG 550
B1TR3100	94-017	LG 441
B1TR3101	94-018	LG 565
B1TR3102	94-011	LG 572
B1TR3103	94-022	LG 565
B1TR3104	94-032	LG 568
B1TR3105	94-061	LG 561
B1TR3106	94-019	LG 570
B1TR3107	94-029	LG 414
B1TR3108	91-805	LG 560
B1TR3109	91-806	LG 447
B1TR3110	94-021	LG 573
B1TR3111	94-026	LG 369
B1TR3115	94-322	LG 520
B1UN3200	90-620	LG 368
B1UN3201	90-621	LG 368
B1UN3202	90-146	LG 368
B1UN3203	90-143	LG 368
B1UN3204	90-144	LG 368
B1UN3205	90-145	LG 368
B1UN3206	90-146	LG 368
B1WA3400	91-912	LG 576
B1WA3401	91-913	LG 576
B1WA3402	91-919	LG 576
B1WA3403	91-920	LG 576
B1WD3500	91-761	LG 578

TRACTOR SUPPLY

PART No.	OREGON	Page
1000765	93-005	LG 447
1009968	98-093	LG 411
1009976	98-090	LG 519
1010765	92-615	LG 491
4415029	98-499	LG 519
4415249	198-049	LG 518
4415346	198-058	LG 517
4415354	198-059	LG 403
4415370	98-051	LG 521
4421363	91-050	LG 559
4425309	98-072	LG 408
4429824	98-090	LG 519
4435388	91-506	LG 473
4435613	195-072	LG 530
4435647	97-001	LG 527
4441232	198-049	LG 518
4441258	98-050	LG 521
4441290	98-050	LG 521
4441957	95-051	LG 465
4441999	97-024	LG 525
4442238	195-003	LG 400
4442246	95-045	LG 374
4442254	95-068	LG 376
4442262	95-018	LG 399
4442296	92-015	LG 407
4442301	195-062	LG 376
4442327	91-440	LG 408
4442432	198-059	LG 403
4442547	98-072	LG 408
4445008	191-392	LG 488
4445016	91-389	LG 538
4445024	91-380	LG 538
4445032	191-139	LG 491
4445040	191-108	LG 484
4445058	195-005	LG 373
4445066	195-032	LG 425
4445074	195-021	LG 468
4445082	95-052	LG 398
4445090	195-033	LG 400
4445105	195-067	LG 380
4445113	198-086	LG 565
4445171	98-087	LG 407
4452039	91-057	LG 409
4452144	91-058	LG 411
4452178	198-049	LG 518
4454277	69-262-0	
4457102	98-095	LG 521
4457110	98-096	LG 404
490-110-0038	95-045	LG 374
60-7118-6	198-059	LG 403

X

OREGON®

Numerical & Alphabetical Indexes

2019 Numerical Index

OREGON	Page	Code	Pk.
02-002	SFS 100	X	10
02-006	SFS 100	X	10
02-007	SFS 100	X	10
02-008	SFS 100	X	10
02-009	SFS 100	X	10
02-010-1	SFS 101	X	10
02-011-1	SFS 101	X	10
02-015-1	SFS 101	X	10
02-017	LG 742	X	1
02-020		X	10
02-034		X	1
02-035	LG 368	X	1
02-040	LG 765	X	10
02-041	LG 765	X	10
02-050-0	SFS 105	X	10
02-098	LG 722	X	10
02-099	LG 722	X	10
02-100-0		X	10
02-101	LG 721	X	10
02-103	LG 722	X	10
02-106	LG 723	X	10
02-107	LG 723	X	10
02-108	LG 723	X	10
02-111	LG 723	X	10
02-115	LG 723	X	10
02-136	LG 686	N	1
02-137	LG 686	N	1
02-138	LG 686	N	1
02-139	LG 686	N	1
02-168	SFS 106	X	10
02-175	LG 676	X	10
02-176	LG 676	X	10
02-177	LG 676	X	10
02-178	LG 676	X	10
02-179	LG 676	X	10
02-180	LG 676	X	10
02-181	LG 676	X	10
02-182	LG 676	X	10
02-184	LG 676	X	10
02-187	LG 676	X	10
02-188	LG 676	X	10
02-190	LG 676	X	10
02-191	LG 676	X	10
02-192	LG 676	X	10
02-193	LG 676	X	10
02-194	LG 676	X	10
02-195	LG 676	X	10
02-196	LG 676	X	10
02-209	SFS 100	X	10
02-216	SFS 100	X	10
02-217	SFS 100	X	10
02-220	SFS 100	X	10
02-301	SFS 105	X	10
02-304	SFS 105	X	10
02-325	SFS 102	X	10
02-327	SFS 102	X	10
02-401	LG 790	X	10
02-402	LG 790	X	10
02-403	LG 790	X	10
02-404	LG 790	X	10
02-405	LG 790	X	10
02-406	LG 790	X	10
02-407	LG 790	X	10
02-411	SFS 100	X	10
02-414	SFS 100	X	10
02-416		X	10
02-417	SFS 100	X	10
02-419	SFS 100	X	10
02-424	SFS 100	X	10
02-432	SFS 100	X	10
02-442	LG 803	X	1

OREGON	Page	Code	Pk.
02-443	SFS 104	X	10
02-444	SFS 104	X	10
02-445	SFS 104	X	10
02-446	SFS 104	X	10
02-486	SFS 103	X	10
02-490	SFS 103	X	10
02-509	SFS 101	X	10
02-531		X	10
02-535		X	10
02-635	SFS 102	X	10
02-640	SFS 102	X	10
02-644-0	LG 748	X	10
02-648	SFS 102	X	10
02-700	LG 765	X	10
02-701	LG 765	X	10
02-860	LG 766	X	10
02-861	LG 766	X	10
02-901	LG 853	X	10
03-100	LG 796	X	1
03-101	LG 794	X	1
03-102	LG 795	X	10
03-103	LG 794	X	1
03-104	LG 794	X	1
03-105	LG 794	X	10
03-106	LG 795	X	10
03-107	LG 795	X	1
03-108	LG 795	X	10
03-109	LG 795	X	1
03-110	LG 795	X	10
03-111	LG 794	X	10
03-112	LG 796	X	1
03-113	LG 796	X	1
03-114	LG 795	X	1
03-115	LG 794	X	1
03-116	LG 795	X	1
03-117	LG 795	X	1
03-118	LG 795	X	1
03-119	LG 796	X	1
03-120	LG 794	X	1
03-121	LG 796	X	1
03-122	LG 795	X	1
03-123	LG 796	X	1
03-124	LG 794	X	1
03-125	LG 795	X	1
03-126	LG 795	X	1
03-127	LG 794	X	1
03-128	LG 793	X	1
03-129	LG 793	X	1
03-130	LG 796	X	1
03-131	LG 795	X	1
03-132	LG 795	X	1
03-133	LG 793	X	1
03-134	LG 796	X	1
03-135	LG 793	X	1
03-136	LG 793	X	1
03-137	LG 794	X	1
03-138	LG 795	X	1
03-139	LG 796	X	1
03-140	LG 795	X	1
03-141	LG 793	X	1
03-142	LG 794	X	1
03-143	LG 794	X	1
03-144	LG 796	X	1
03-145	LG 793	X	1
03-146	LG 794	X	1
03-147	LG 793	X	1
03-148	LG 793	X	1
03-149	LG 795	X	1
03-150	LG 793	X	1
03-151	LG 793	X	1
03-152	LG 795	X	1

OREGON	Page	Code	Pk.
03-153	LG 794	X	1
03-154	LG 793	X	1
03-155	LG 793	X	1
03-156	LG 793	X	1
03-157	LG 793	X	1
03-300	LG 800	X	1
03-301	LG 799	X	1
03-304	LG 800	X	1
03-305	LG 799	X	1
03-306	LG 800	X	1
03-307	LG 801	X	1
03-309	LG 800	X	1
03-310	LG 801	X	1
03-311	LG 801	X	1
03-312	LG 799	X	1
03-313	LG 801	X	1
03-314	LG 800	X	2
03-316	LG 800	X	1
03-317	LG 800	X	2
03-318	LG 800	X	2
03-319	LG 800	X	10
03-320	LG 799	X	1
03-321	LG 800	X	1
03-322	LG 800	X	1
03-324	LG 800	X	5
03-325	LG 800	X	1
03-326	LG 800	X	2
03-328	LG 801	X	1
03-500	LG 796	X	1
03-501	LG 796	X	1
03-502	LG 797	X	1
03-503	LG 797	X	1
03-504	LG 797	X	1
03-505	LG 798	X	1
03-506	LG 797	X	1
03-507	LG 798	X	1
03-508	LG 798	X	1
04-001	SFS 105	X	1
04-006-0	LG 686	X	1
04-007	LG 686	X	1
04-008	LG 686	X	10
04-009	LG 686	X	10
04-015	LG 899	X	10
04-111	SFS 105	X	10
04-112	SFS 105	X	10
04-114	SFS 105	X	10
04-116	SFS 105	X	10
04-117	SFS 105	X	10
04-118	SFS 105	X	10
04-119	SFS 105	X	10
04-121	SFS 105	X	10
04-125	LG 694	X	1
04-150	SFS 103	X	10
04-151	SFS 105	X	10
04-152	SFS 103	X	10
04-153	SFS 103	X	10
04-154	SFS 103	X	10
04-155	SFS 103	X	10
04-157	SFS 103	X	10
04-158	SFS 103	X	10
04-159	SFS 103	X	10
04-160	SFS 103	X	10
04-163	SFS 104	X	1
04-164	SFS 104	X	10
04-170	SFS 103	X	1
04-555	SFS 105	X	10
04-556	SFS 103	X	10
04-720	SFS 105	X	10
04-721		X	10
04-722		X	10
04-723		X	10

N = New Item
F = NLA after inventories are sold

D = Discontinued after 2019 catalog
X = Active part number

2019 Numerical Index

OREGON	Page	Code	Pk.
04-725	SFS 105	X	10
05-001	LG 913	X	1
05-020	LG 913	X	1
05-021	LG 913	X	1
05-022	LG 913	X	1
05-023	LG 914	X	1
05-027	LG 913	N	1
05-060	LG 914	X	10
05-061	LG 914	X	10
05-070	LG 914	X	10
05-072	LG 1023	X	1
06-003	LG 805	X	1
06-004	LG 805	X	1
07-001	LG 765	X	1
07-004	LG 769	X	10
07-007	LG 689	X	1
07-008	LG 762	X	1
07-009	LG 762	X	1
07-010	LG 764	X	1
07-011	LG 763	X	1
07-013	LG 773	X	1
07-016	LG 762	X	1
07-017	LG 1022	X	1
07-022	LG 764	X	1
07-024	LG 771	X	1
07-025	LG 771	X	1
07-026	LG 772	X	1
07-060	LG 762	X	1
07-061	LG 762	X	1
07-062	LG 775	X	1
07-063	LG 775	X	1
07-064	LG 775	X	1
07-066	LG 778	X	1
07-071	LG 1020	X	1
07-072	LG 763	X	1
07-073	LG 768	X	1
07-074	LG 1026	X	1
07-075	LG 763	X	1
07-076	LG 762	X	1
07-084	LG 768	X	1
07-085	LG 764	X	1
07-086		X	1
07-088	LG 768	X	1
07-090	LG 764	X	1
07-092	LG 778	X	1
07-094	LG 778	X	1
07-097	LG 764	X	1
07-098	LG 765	X	1
07-099	LG 764	X	1
07-100	LG 774	X	10
07-101	LG 775	X	10
07-102	LG 774	X	10
07-103	LG 775	X	1
07-104	LG 776	X	1
07-107	LG 774	X	1
07-109	LG 778	X	10
07-110	LG 776	X	1
07-111	LG 776	X	1
07-112	LG 774	X	1
07-118	LG 777	X	1
07-122	LG 775	X	1
07-124	LG 776	X	1
07-125	LG 766	X	1
07-126	LG 764	X	10
07-127	LG 764	X	1
07-129	LG 774	X	10
07-131	LG 772	X	1
07-132	LG 773	X	1
07-133	LG 778	X	10
07-134	LG 763	X	1
07-135	LG 762	X	1

OREGON	Page	Code	Pk.
07-136	LG 762	X	1
07-137	LG 779	X	10
07-138		N	1
07-140	LG 765	X	1
07-141	LG 775	X	1
07-142	LG 763	N	1
07-143	LG 776	N	1
07-144	LG 762	N	1
07-145	LG 762	X	1
07-146	LG 762	X	1
07-147	LG 780	N	1
07-148	LG 780	N	1
07-149	LG 689	N	1
07-150	LG 761	X	1
07-151	LG 761	X	1
07-152	LG 761	X	1
07-153	LG 761	X	1
07-154	LG 761	X	1
07-155	LG 761	X	1
07-156	LG 761	X	1
07-157	LG 761	X	1
07-158	LG 761	X	1
07-160	LG 774	X	1
07-162	LG 763	X	1
07-163	LG 777	N	1
07-164	LG 777	N	1
07-165	LG 777	N	1
07-166	LG 777	N	1
07-167	LG 763	N	1
07-200	LG 778	X	10
07-201	LG 779	X	10
07-204	LG 778	X	10
07-205	LG 779	X	10
07-206	LG 776	X	10
07-207	LG 779	X	10
07-208	LG 779	X	1
07-209	LG 779	X	1
07-210	LG 779	X	1
07-211	LG 779	X	1
07-213	LG 777	X	1
07-214	LG 779	X	1
07-215	LG 776	X	10
07-217	LG 778	X	1
07-219	LG 779	X	1
07-250		X	1
07-251	LG 761	X	1
07-252	LG 761	X	1
07-253	LG 761	X	1
07-254	LG 761	X	1
07-255	LG 761	X	1
07-256	LG 761	X	1
07-257	LG 761	X	1
07-258	LG 761	X	1
07-259	LG 761	X	1
07-260	LG 761	X	1
07-261	LG 761	X	1
07-262	LG 761	X	1
07-263	LG 761	X	1
07-264	LG 761	X	1
07-265	LG 761	X	1
07-266	LG 761	X	1
07-267	LG 761	X	1
07-268	LG 761	X	1
07-303	LG 770	X	10
07-304	LG 770	X	1
07-307	LG 770	X	1
07-308	LG 772	X	1
07-309	LG 772	X	1
07-312	LG 773	X	1
07-314	LG 773	X	1
07-315	LG 772	X	1

OREGON	Page	Code	Pk.
07-317	LG 771	X	1
07-318	LG 771	X	1
07-319	LG 771	X	1
07-331	LG 776	X	1
07-332	LG 776	X	1
07-390	LG 766	X	1
07-391	LG 766	X	10
07-392	LG 767	X	10
07-393	LG 765	X	1
07-400	LG 767	X	10
07-403	LG 766	X	1
07-404	LG 766	X	10
07-406	LG 767	X	10
07-407	LG 767	X	10
07-408	LG 766	X	10
07-409	LG 766	X	1
07-410		N	1
07-411		N	1
07-450	LG 761	X	1
07-551	LG 761	X	10
07-552	LG 761	X	10
07-553	LG 761	X	10
07-555	LG 761	X	10
07-600	LG 770	X	1
07-601	LG 770	X	1
07-602	LG 770	X	1
07-700	LG 767	X	1
08-002		N	1
08-010	SFS 103	X	1
08-016	SFS 101	X	1
08-023	SFS 104	X	1
08-075-0	SFS 103	X	1
08-150	SFS 100	X	1
08-152	SFS 100	X	1
08-200	SFS 101	X	1
08-201	SFS 104	X	1
08-225	SFS 102	X	1
08-240	SFS 101	X	1
08-300	SFS 100	X	1
08-331	SFS 103	X	1
08-375	SFS 102	X	1
08-410	SFS 100	X	1
08-422	SFS 104	X	1
08-423	SFS 104	X	1
08-710	SFS 102	X	1
09-006	SFS 106	X	10
09-009	SFS 106	X	10
09-010		N	6
09-011	SFS 106	X	10
09-022		X	1
09-238	SFS 106	X	10
09-255	SFS 106	X	10
09-260	LG 870	X	10
09-801	LG 229	X	10
09-802	LG 233	X	10
09-803	LG 697	X	1
09-804	LG 233	X	1
09-808	LG 697	X	1
09-901	SFS 106	X	10
09-905	SFS 106	X	10
10-002	SFS 22	X	1
115-029	LG 255	X	1
115-145	LG 323	X	1
115-146	LG 256	X	1
115-200	LG 287	X	1
115-201	LG 266	X	1
115-202	LG 271	X	1
115-203	LG 271	X	1
115-204	LG 282	X	1
115-205	LG 258	X	1
115-206	LG 294	X	1

N = New Item
F = NLA after inventories are sold

D = Discontinued after 2019 catalog
X = Active part number

2019 Numerical Index

OREGON	Page	Code	Pk.
115-207	LG 275	X	1
115-208	LG 275	X	1
115-209	LG 306	X	1
115-212	LG 325	X	1
115-213	LG 328	X	1
115-214	LG 325	X	1
115-215	LG 329	X	1
115-216	LG 327	X	1
115-217	LG 325	X	1
115-218	LG 331	X	1
115-219	LG 305	X	1
115-220	LG 264	X	1
115-221	LG 862	X	1
115-222	LG 264	X	1
115-223	LG 250	X	1
115-703	LG 299	N	1
115-704	LG 282	N	1
115-705	LG 283	N	1
115-706	LG 283	N	1
1215R	SFS 88	X	1
1215Y	SFS 88	X	1
15-001	LG 311	X	1
15-002	LG 311	X	1
15-004	LG 282	X	1
15-005	LG 282	X	1
15-009	LG 296	X	1
15-010	LG 296	X	1
15-011	LG 299	X	1
15-012	LG 299	X	1
15-013	LG 256	X	1
15-014	LG 251	X	1
15-016	LG 323	X	1
15-017	LG 279	X	1
15-018	LG 279	X	1
15-019	LG 279	X	1
15-020	LG 291	X	1
15-021	LG 256	X	1
15-022	LG 292	X	1
15-023	LG 256	X	1
15-024	LG 292	X	1
15-025	LG 255	X	1
15-026	LG 277	X	1
15-027	LG 306	X	1
15-028	LG 277	X	1
15-029	LG 291	X	1
15-030	LG 285	X	1
15-031	LG 287	X	1
15-032	LG 287	X	1
15-033	LG 287	X	1
15-034	LG 293	X	1
15-035	LG 295	X	1
15-036	LG 295	X	1
15-037	LG 295	X	1
15-038	LG 296	X	1
15-039	LG 296	X	1
15-040	LG 296	X	1
15-041	LG 297	X	1
15-042	LG 297	X	1
15-043	LG 299	X	1
15-045	LG 314	X	1
15-046	LG 314	X	1
15-047		X	1
15-049	LG 323	X	1
15-050	LG 323	X	1
15-051	LG 250	X	1
15-052	LG 315	X	1
15-053	LG 305	X	1
15-054	LG 324	X	1
15-055	LG 331	X	1
15-056	LG 331	X	1
15-057	LG 331	X	1

OREGON	Page	Code	Pk.
15-100	LG 306	X	1
15-101	LG 269	X	1
15-102	LG 269	X	1
15-103	LG 269	X	1
15-104	LG 269	X	1
15-105	LG 269	X	1
15-106	LG 273	X	1
15-107	LG 273	X	1
15-108	LG 273	X	1
15-109	LG 273	X	1
15-110	LG 273	X	1
15-111	LG 273	X	1
15-112	LG 305	X	1
15-113	LG 282	X	1
15-114	LG 282	X	1
15-115	LG 282	X	1
15-116	LG 283	X	1
15-117	LG 283	X	1
15-118	LG 283	X	1
15-119	LG 283	X	1
15-120	LG 284	X	1
15-121	LG 284	X	1
15-122	LG 284	X	1
15-123	LG 284	X	1
15-124	LG 284	X	1
15-125	LG 284	X	1
15-126	LG 284	X	1
15-127	LG 284	X	1
15-128	LG 284	X	1
15-129	LG 292	X	1
15-130	LG 296	X	1
15-131	LG 296	X	1
15-132	LG 306	X	1
15-133	LG 306	X	1
15-134	LG 314	X	1
15-135	LG 314	X	1
15-136	LG 314	X	1
15-137	LG 323	X	1
15-138	LG 323	X	1
15-139	LG 323	X	1
15-140	LG 323	X	1
15-141	LG 323	X	1
15-142	LG 323	X	1
15-143	LG 323	X	1
15-144	LG 323	X	1
15-151	LG 285	X	1
15-152	LG 264	X	1
15-153	LG 286	X	1
15-154	LG 286	X	1
15-155	LG 264	X	1
15-156	LG 286	X	1
15-157	LG 286	X	1
15-158	LG 286	X	1
15-159	LG 286	X	1
15-160	LG 253	X	1
15-164	LG 286	X	1
15-165	LG 286	X	1
15-167	LG 286	X	1
15-169	LG 266	X	1
15-170	LG 266	X	1
15-171	LG 286	X	1
15-173	LG 287	X	1
15-174	LG 287	X	1
15-179	LG 287	X	1
15-180	LG 287	X	1
15-181	LG 266	X	1
15-184	LG 285	X	1
15-185	LG 285	X	1
15-187	LG 285	X	1
15-188	LG 285	X	1
15-190	LG 265	X	1

OREGON	Page	Code	Pk.
15-192	LG 265	X	1
15-193	LG 266	X	1
15-194	LG 265	X	1
15-195	LG 265	X	1
15-200	LG 285	X	1
15-201	LG 285	X	1
15-202	LG 285	X	1
15-203	LG 286	X	1
15-205	LG 266	X	1
15-208	LG 266	X	1
15-210	LG 266	X	1
15-211	LG 266	X	1
15-213	LG 286	X	1
15-215	LG 287	X	1
15-216	LG 266	X	1
15-217	LG 287	X	1
15-218	LG 285	X	1
15-220	LG 285	X	1
15-221	LG 265	X	1
15-222	LG 285	X	1
15-223	LG 259	X	1
15-224	LG 260	X	1
15-225	LG 260	X	1
15-226	LG 260	X	1
15-227	LG 260	X	1
15-228	LG 260	X	1
15-229	LG 260	X	1
15-230	LG 260	X	1
15-231	LG 260	X	1
15-232	LG 266	X	1
15-233	LG 266	X	1
15-234	LG 267	X	1
15-235	LG 267	X	1
15-236	LG 267	X	1
15-237	LG 267	X	1
15-238	LG 267	X	1
15-239	LG 267	X	1
15-240	LG 267	X	1
15-241	LG 267	X	1
15-242	LG 267	X	1
15-243	LG 267	X	1
15-244	LG 267	X	1
15-247	LG 268	X	1
15-248	LG 268	X	1
15-249	LG 268	X	1
15-250	LG 268	X	1
15-253	LG 267	X	1
15-254	LG 267	X	1
15-255	LG 267	X	1
15-256	LG 267	X	1
15-257	LG 267	X	1
15-258	LG 267	X	1
15-259	LG 267	X	1
15-260	LG 268	X	1
15-261	LG 268	X	1
15-262	LG 268	X	1
15-264	LG 268	X	1
15-265	LG 268	X	1
15-266	LG 268	X	1
15-267	LG 268	X	1
15-268	LG 268	X	1
15-269	LG 270	X	1
15-270	LG 270	X	1
15-271	LG 270	X	1
15-272	LG 270	X	1
15-274	LG 270	X	1
15-275	LG 270	X	1
15-276	LG 270	X	1
15-277	LG 270	X	1
15-278	LG 270	X	1
15-279	LG 270	X	1

N = New Item
F = NLA after inventories are sold

D = Discontinued after 2019 catalog
X = Active part number

2019 Numerical Index

OREGON	Page	Code	Pk.
15-280	LG 270	X	1
15-281	LG 270	X	1
15-282	LG 270	X	1
15-283	LG 270	X	1
15-286	LG 270	X	1
15-287	LG 270	X	1
15-288	LG 270	X	1
15-289	LG 269	X	1
15-290	LG 269	X	1
15-291	LG 269	X	1
15-292	LG 270	X	1
15-293	LG 270	X	1
15-294	LG 270	X	1
15-295	LG 271	X	1
15-296	LG 270	X	1
15-297	LG 270	X	1
15-299	LG 271	X	1
15-302	LG 271	X	1
15-303	LG 271	X	1
15-304	LG 271	X	1
15-305	LG 271	X	1
15-306	LG 271	X	1
15-307	LG 271	X	1
15-308	LG 271	X	1
15-309	LG 271	X	1
15-310	LG 271	X	1
15-313	LG 271	X	1
15-314	LG 271	X	1
15-315	LG 271	X	1
15-316	LG 271	X	1
15-317	LG 271	X	1
15-318	LG 271	X	1
15-320	LG 272	X	1
15-321	LG 272	X	1
15-322	LG 272	X	1
15-331	LG 272	X	1
15-333	LG 272	X	1
15-335	LG 272	X	1
15-337	LG 272	X	1
15-339	LG 272	X	1
15-350	LG 272	X	1
15-351	LG 272	X	1
15-352	LG 272	X	1
15-353	LG 272	X	1
15-354	LG 272	X	1
15-355	LG 272	X	1
15-356	LG 272	X	1
15-357	LG 272	X	1
15-358	LG 272	X	1
15-359	LG 272	X	1
15-360	LG 272	X	1
15-361	LG 272	X	1
15-363	LG 272	X	1
15-364	LG 272	X	1
15-366	LG 277	X	1
15-367	LG 277	X	1
15-368	LG 277	X	1
15-369	LG 278	X	1
15-370	LG 278	X	1
15-371	LG 278	X	1
15-372	LG 278	X	1
15-373	LG 278	X	1
15-374	LG 278	X	1
15-375	LG 278	X	1
15-376	LG 278	X	1
15-386	LG 278	X	1
15-388	LG 278	X	1
15-389	LG 278	X	1
15-390	LG 278	X	1
15-394	LG 278	X	1
15-395	LG 278	X	1

OREGON	Page	Code	Pk.
15-398	LG 282	X	1
15-399	LG 282	X	1
15-401	LG 279	X	1
15-404	LG 279	X	1
15-405	LG 279	X	1
15-408	LG 279	X	1
15-409	LG 280	X	1
15-410	LG 280	X	1
15-411	LG 280	X	1
15-412	LG 280	X	1
15-413	LG 280	X	1
15-415	LG 280	X	1
15-416	LG 280	X	1
15-417	LG 280	X	1
15-418	LG 280	X	1
15-419	LG 280	X	1
15-420	LG 280	X	1
15-421	LG 280	X	1
15-424	LG 280	X	1
15-425	LG 280	X	1
15-426	LG 280	X	1
15-427	LG 282	X	1
15-428	LG 283	X	1
15-429	LG 283	X	1
15-430	LG 283	X	1
15-431	LG 283	X	1
15-432	LG 283	X	1
15-434	LG 283	X	1
15-435	LG 283	X	1
15-436	LG 283	X	1
15-437	LG 283	X	1
15-438	LG 283	X	1
15-440	LG 283	X	1
15-443	LG 284	X	1
15-444	LG 284	X	1
15-445	LG 284	X	1
15-446	LG 284	X	1
15-449	LG 284	X	1
15-450	LG 285	X	1
15-451	LG 285	X	1
15-452	LG 287	X	1
15-453	LG 287	X	1
15-454	LG 287	X	1
15-455	LG 287	X	1
15-457	LG 287	X	1
15-458	LG 287	X	1
15-459	LG 288	X	1
15-460	LG 288	X	1
15-461	LG 288	X	1
15-462	LG 288	X	1
15-463	LG 288	X	1
15-464	LG 288	X	1
15-465	LG 288	X	1
15-466	LG 288	X	1
15-467	LG 288	X	1
15-472	LG 259	X	1
15-473	LG 288	X	1
15-474	LG 288	X	1
15-477	LG 288	X	1
15-483	LG 293	X	1
15-485	LG 293	X	1
15-486	LG 293	X	1
15-487	LG 293	X	1
15-488	LG 293	X	1
15-490	LG 294	X	1
15-491	LG 294	X	1
15-492	LG 294	X	1
15-493	LG 294	X	1
15-494	LG 294	X	1
15-497	LG 294	X	1
15-498	LG 294	X	1

OREGON	Page	Code	Pk.
15-499	LG 294	X	1
15-500	LG 294	X	1
15-501	LG 294	X	1
15-507	LG 296	X	1
15-508	LG 296	X	1
15-511	LG 292	X	1
15-512	LG 298	X	1
15-513	LG 298	X	1
15-514	LG 298	X	1
15-515	LG 298	X	1
15-516	LG 298	X	1
15-517	LG 298	X	1
15-519	LG 298	X	1
15-522	LG 298	X	1
15-525	LG 298	X	1
15-526	LG 298	X	1
15-529	LG 298	X	1
15-535	LG 298	X	1
15-536	LG 298	X	1
15-538	LG 298	X	1
15-539	LG 298	X	1
15-541	LG 298	X	1
15-544	LG 298	X	1
15-545	LG 298	X	1
15-546	LG 298	X	1
15-547	LG 298	X	1
15-548	LG 298	X	1
15-549	LG 299	X	1
15-550	LG 299	X	1
15-553	LG 299	X	1
15-559	LG 299	X	1
15-561	LG 299	X	1
15-566	LG 299	X	1
15-567	LG 299	X	1
15-568	LG 299	X	1
15-570	LG 299	X	1
15-571	LG 299	X	1
15-572	LG 299	X	1
15-573	LG 299	X	1
15-574	LG 299	X	1
15-575	LG 299	X	1
15-576	LG 299	X	1
15-577	LG 300	X	1
15-578	LG 300	X	1
15-579	LG 300	X	1
15-580	LG 300	X	1
15-581	LG 273	X	1
15-583	LG 273	X	1
15-588	LG 275	X	1
15-589	LG 273	X	1
15-590	LG 300	X	1
15-593	LG 301	X	1
15-594	LG 274	X	1
15-595	LG 274	X	1
15-598	LG 301	X	1
15-601	LG 274	X	1
15-602	LG 304	X	1
15-603	LG 304	X	1
15-604	LG 275	X	1
15-605	LG 275	X	1
15-606	LG 275	X	1
15-609	LG 305	X	1
15-613	LG 305	X	1
15-616	LG 303	X	1
15-619	LG 274	X	1
15-623	LG 274	X	1
15-625	LG 275	X	1
15-627	LG 275	X	1
15-628	LG 275	X	1
15-629	LG 304	X	1
15-630	LG 306	X	1

N = New Item
F = NLA after inventories are sold

D = Discontinued after 2019 catalog
X = Active part number

2019 Numerical Index

OREGON	Page	Code	Pk.
15-634	LG 307	X	1
15-638	LG 308	X	1
15-641	LG 308	X	1
15-642	LG 308	X	1
15-643	LG 308	X	1
15-644	LG 308	X	1
15-645	LG 306	X	1
15-646	LG 306	X	1
15-647	LG 306	X	1
15-648	LG 306	X	1
15-649	LG 309	X	1
15-650	LG 259	X	1
15-651	LG 259	X	1
15-652	LG 259	X	1
15-653	LG 310	X	1
15-654	LG 309	X	1
15-655	LG 309	X	1
15-657	LG 259	X	1
15-659	LG 309	X	1
15-660	LG 309	X	1
15-661	LG 310	X	1
15-662	LG 310	X	1
15-663	LG 310	X	1
15-664	LG 311	X	1
15-665	LG 311	X	1
15-667	LG 311	X	1
15-668	LG 311	X	1
15-669	LG 311	X	1
15-670	LG 311	X	1
15-672	LG 311	X	1
15-673	LG 311	X	1
15-674	LG 312	X	1
15-677	LG 313	X	1
15-678	LG 313	X	1
15-679	LG 313	X	1
15-680	LG 312	X	1
15-681	LG 313	X	1
15-682	LG 313	X	1
15-683	LG 313	X	1
15-684	LG 313	X	1
15-685	LG 315	X	1
15-686	LG 315	X	1
15-688	LG 315	X	1
15-691	LG 260	X	1
15-693	LG 311	X	1
15-695	LG 260	X	1
15-700	LG 259	X	1
15-704	LG 311	X	1
15-705	LG 315	X	1
15-708	LG 312	X	1
15-711	LG 259	X	1
15-712	LG 260	X	1
15-715	LG 315	X	1
15-716	LG 315	X	1
15-717	LG 260	X	1
15-718	LG 259	X	1
15-719	LG 312	X	1
15-724	LG 316	X	1
15-729	LG 316	X	1
15-731	LG 316	X	1
15-732	LG 316	X	1
15-733	LG 316	X	1
15-734	LG 316	X	1
15-735	LG 316	X	1
15-737	LG 316	X	1
15-739	LG 316	X	1
15-740	LG 316	X	1
15-741	LG 317	X	1
15-742	LG 317	X	1
15-744	LG 317	X	1
15-746	LG 317	X	1

OREGON	Page	Code	Pk.
15-748	LG 317	X	1
15-749	LG 317	X	1
15-750	LG 317	X	1
15-751	LG 317	X	1
15-753	LG 317	X	1
15-756	LG 317	X	1
15-760	LG 317	X	1
15-761	LG 317	X	1
15-762	LG 317	X	1
15-763	LG 318	X	1
15-764	LG 318	X	1
15-765	LG 318	X	1
15-766	LG 318	X	1
15-767	LG 318	X	1
15-768	LG 318	X	1
15-769	LG 318	X	1
15-771	LG 318	X	1
15-773	LG 318	X	1
15-774	LG 318	X	1
15-776	LG 318	X	1
15-780	LG 320	X	1
15-781	LG 320	X	1
15-782	LG 320	X	1
15-783	LG 320	X	1
15-784	LG 320	X	1
15-785	LG 320	X	1
15-786	LG 320	X	1
15-788	LG 320	X	1
15-789	LG 320	X	1
15-790	LG 320	X	1
15-791	LG 320	X	1
15-792	LG 320	X	1
15-794	LG 320	X	1
15-795	LG 320	X	1
15-797	LG 320	X	1
15-798	LG 320	X	1
15-799	LG 320	X	1
15-800	LG 320	X	1
15-801	LG 321	X	1
15-802	LG 321	X	1
15-803	LG 321	X	1
15-804	LG 321	X	1
15-805	LG 321	X	1
15-807	LG 321	X	1
15-809	LG 321	X	1
15-810	LG 321	X	1
15-812	LG 321	X	1
15-813	LG 321	X	1
15-814	LG 321	X	1
15-815	LG 321	X	1
15-820	LG 321	X	1
15-821	LG 321	X	1
15-824	LG 321	X	1
15-825	LG 321	X	1
15-826	LG 321	X	1
15-827	LG 322	X	1
15-828	LG 322	X	1
15-829	LG 324	X	1
15-833	LG 324	X	1
15-836	LG 324	X	1
15-837	LG 324	X	1
15-838	LG 324	X	1
15-839	LG 324	X	1
15-842	LG 325	X	1
15-843	LG 325	X	1
15-844	LG 325	X	1
15-845	LG 325	X	1
15-847	LG 325	X	1
15-848	LG 325	X	1
15-849	LG 325	X	1
15-850	LG 325	X	1

OREGON	Page	Code	Pk.
15-851	LG 325	X	1
15-852	LG 325	X	1
15-853	LG 325	X	1
15-854	LG 325	X	1
15-855	LG 258	X	1
15-856	LG 325	X	1
15-858	LG 325	X	1
15-860	LG 325	X	1
15-861	LG 325	X	1
15-863	LG 326	X	1
15-864	LG 326	X	1
15-865	LG 326	X	1
15-867	LG 326	X	1
15-868	LG 326	X	1
15-869	LG 326	X	1
15-870	LG 326	X	1
15-871	LG 326	X	1
15-872	LG 326	X	1
15-873	LG 326	X	1
15-874	LG 326	X	1
15-875	LG 326	X	1
15-876	LG 326	X	1
15-877	LG 326	X	1
15-878	LG 327	X	1
15-879	LG 327	X	1
15-881	LG 327	X	1
15-882	LG 327	X	1
15-883	LG 327	X	1
15-884	LG 327	X	1
15-885	LG 327	X	1
15-886	LG 327	X	1
15-887	LG 327	X	1
15-888	LG 327	X	1
15-889	LG 327	X	1
15-890	LG 327	X	1
15-891	LG 327	X	1
15-892	LG 327	X	1
15-893	LG 328	X	1
15-894	LG 328	X	1
15-895	LG 328	X	1
15-896	LG 328	X	1
15-897	LG 328	X	1
15-898	LG 328	X	1
15-899	LG 328	X	1
15-900	LG 328	X	1
15-901	LG 328	X	1
15-902	LG 328	X	1
15-903	LG 328	X	1
15-904	LG 328	X	1
15-905	LG 328	X	1
15-906	LG 328	X	1
15-907	LG 329	X	1
15-908	LG 329	X	1
15-911	LG 329	X	1
15-913	LG 329	X	1
15-914	LG 329	X	1
15-916	LG 329	X	1
15-918	LG 329	X	1
15-920	LG 329	X	1
15-921	LG 329	X	1
15-922	LG 329	X	1
15-923	LG 330	X	1
15-924	LG 330	X	1
15-926	LG 330	X	1
15-928	LG 330	X	1
15-929	LG 330	X	1
15-930	LG 330	X	1
15-931	LG 330	X	1
15-932	LG 330	X	1
15-933	LG 330	X	1
15-934	LG 330	X	1

N = New Item
F = NLA after inventories are sold

D = Discontinued after 2019 catalog
X = Active part number

2019 Numerical Index

OREGON	Page	Code	Pk.
15-935	LG 330	X	1
15-936	LG 330	X	1
15-938	LG 326	X	1
15-939	LG 329	X	1
15-940	LG 329	X	1
15-943	LG 329	X	1
15-945	LG 325	X	1
15-947	LG 328	X	1
15-948	LG 253	X	1
15-949	LG 255	X	1
15-951	LG 297	X	1
15-952	LG 297	X	1
15-954	LG 297	X	1
15-955	LG 297	X	1
15-956	LG 297	X	1
15-957	LG 297	X	1
15-958	LG 297	X	1
15-959	LG 297	X	1
15-961	LG 297	X	1
15-962	LG 297	X	1
15-963	LG 297	X	1
1620E	SFS 89	X	1
1632E	SFS 89	X	1
1633E	SFS 89	X	1
1635E	SFS 89	X	1
1647E	SFS 89	X	1
1689E	SFS 89	X	1
16PB	SFS 93	X	12
175-000	LG 262	X	1
175-002	LG 301	X	1
175-012	LG 301	X	1
175-021	LG 274	X	1
175-025	LG 302	X	1
175-028	LG 302	X	1
175-029	LG 303	X	1
175-041	LG 307	X	1
175-068	LG 318	X	1
175-073	LG 319	X	1
175-099	LG 262	X	1
175-105	LG 319	X	1
175-106	LG 261	X	1
175-119	LG 302	X	1
175-135	LG 308	X	1
175-164	LG 262	X	1
175-169	LG 290	X	1
175-170	LG 290	X	1
175-171	LG 261	X	1
175-195	LG 289	X	1
175-197	LG 290	X	1
175-248	LG 294	X	1
175-295	LG 295	X	1
175-299	LG 295	X	1
175-300	LG 295	X	1
175-654	LG 263	X	1
175-673	LG 305	X	1
175-676	LG 304	X	1
175-677	LG 304	X	1
175-706	LG 276	X	1
175-710	LG 276	X	1
175-714	LG 276	X	1
175-800		D	1
175-803	LG 296	X	1
175-810	LG 263	X	1
175-813	LG 276	X	1
175-814	LG 276	X	1
175-815	LG 277	X	1
175-824	LG 274	X	1
175-893	LG 263	X	1
175-894	LG 291	X	1
175-895	LG 263	X	1
175-912	LG 291	X	1

OREGON	Page	Code	Pk.
175-913	LG 262	X	1
175-919	LG 293	X	1
175-992	LG 293	X	1
175-993	LG 303	X	1
175-994	LG 304	X	1
175-995	LG 303	X	1
19-001	LG 983	X	20
19-002	LG 983	X	20
19-003	LG 983	X	20
19-004	LG 983	X	20
19-005	LG 983	X	20
19-006	LG 983	X	20
19-007	LG 983	X	20
19-016	LG 984	X	16
19-017	LG 984	X	16
19-018	LG 984	X	16
19-019	LG 984	X	16
19-025	LG 984	X	16
19-026	LG 984	X	16
19-027	LG 984	X	16
19-028	LG 984	X	16
19-031	LG 983	X	3
19-032	LG 983	X	3
19-033	LG 983	X	3
19-034	LG 983	X	3
19-037	LG 996	X	12
19-038	LG 996	X	12
19-041	LG 983	X	30
19-042	LG 983	X	30
19-043	LG 983	X	30
19-044	LG 983	X	30
191-015	LG 372	X	12
191-108	LG 484	X	12
191-139	LG 491	X	12
191-392	LG 488	X	12
191-518	LG 458	N	6
191-519	LG 458	N	6
1910G	SFS 90	X	1
192-106	LG 491	X	6
1926E	SFS 90	X	1
1932E	SFS 89	X	1
1947E	SFS 89	X	1
195-003	LG 400	X	12
195-005	LG 373	X	12
195-019	LG 466	X	6
195-021	LG 468	X	12
195-032	LG 425	X	12
195-033	LG 400	X	12
195-039	LG 430	X	12
195-048	LG 430	X	12
195-062	LG 376	X	12
195-067	LG 380	X	12
195-070	LG 469	X	6
195-072	LG 530	X	6
195-089	LG 467	N	6
195-093	LG 466	N	6
197-019	LG 539	X	12
198-049	LG 518	X	6
198-052	LG 389	X	12
198-058	LG 517	X	6
198-059	LG 403	X	6
198-063	LG 513	X	12
198-086	LG 565	X	12
198-153	LG 520	X	6
20-002		X	1
20-020	LG 979	X	12
20-021	LG 979	X	12
20-022	LG 979	X	12
20-023	LG 979	X	4
20-024	LG 979	X	4
20-025	LG 979	X	4

OREGON	Page	Code	Pk.
20-026	LG 979	X	4
20-027	LG 979	X	4
20-028	LG 979	X	4
20-034	LG 979	X	12
20-035	LG 979	X	4
20-036	LG 979	X	4
20-100	LG 979	X	12
20-101	LG 979	X	12
20-102	LG 979	X	4
20-103	LG 979	X	4
20-104	LG 979	X	18
20-106	LG 979	X	18
20-107	LG 979	X	12
20-108	LG 979	X	12
20-109	LG 979	X	4
20-110	LG 979	X	4
20-111	LG 979	X	4
20-112	LG 979	X	4
20-113	LG 979	X	4
20-114	LG 979	X	4
20-115	LG 979	X	4
20-116	LG 979	X	4
20-117	LG 979	X	18
20-118	LG 979	X	12
20-119	LG 979	X	4
20-123	LG 979	X	12
20-124	LG 979	X	4
20-125	LG 979	X	4
21-000	LG 985	X	10
21-005	LG 981	X	4
21-030	LG 981	X	4
21-055	LG 981	X	4
21-080	LG 981	X	4
21-095	LG 981	X	4
21-105	LG 981	X	4
21-131	LG 981	X	4
21-155	LG 981	X	4
21-170	LG 981	X	4
21-180	LG 981	X	4
21-195	LG 981	X	4
21-205	LG 981	X	18
21-230	LG 981	X	18
21-231	LG 981	X	12
21-232	LG 981	X	4
21-233	LG 981	X	4
21-234	LG 981	X	12
21-235	LG 981	X	4
21-236	LG 981	X	4
21-255	LG 981	X	18
21-265	LG 981	X	18
21-280	LG 981	X	18
21-295	LG 981	X	18
21-305		X	12
21-330	LG 981	X	12
21-355	LG 981	X	12
21-365	LG 981	X	12
21-370	LG 981	X	12
21-380	LG 981	X	12
21-395	LG 981	X	12
21-405	LG 981	X	12
21-430	LG 981	X	12
21-455	LG 981	X	12
21-470	LG 981	X	12
21-480	LG 981	X	12
21-495	LG 981	X	12
21-505	LG 981	X	4
21-530	LG 981	X	4
21-555	LG 981	X	4
21-580	LG 981	X	4
21-595	LG 981	X	4
21-600	LG 984	X	8

N = New Item
F = NLA after inventories are sold

D = Discontinued after 2019 catalog
X = Active part number

2019 Numerical Index

OREGON	Page	Code	Pk.
21-601	LG 984	X	8
21-602	LG 984	X	8
21-603	LG 984	X	8
21-604	LG 984	X	8
21-605	LG 984	X	4
21-606	LG 984	X	4
21-607	LG 984	X	4
21-608	LG 984	X	4
21-609	LG 984	X	4
21-805	LG 981	X	4
21-830	LG 981	X	4
21-855	LG 981	X	4
21-880	LG 981	X	4
21-895	LG 981	X	4
21-905	LG 981	X	18
21-930	LG 981	X	18
21-955	LG 981	X	18
21-980	LG 981	X	18
21-995	LG 981	X	18
22-005	LG 980	X	4
22-030	LG 980	X	4
22-055	LG 980	X	4
22-070	LG 980	X	4
22-080	LG 980	X	4
22-095	LG 980	X	4
22-105	LG 980	X	4
22-130	LG 980	X	4
22-155	LG 980	X	4
22-170	LG 980	X	4
22-180	LG 980	X	4
22-195	LG 980	X	4
22-205	LG 980	X	18
22-230	LG 980	X	18
22-255	LG 980	X	18
22-270	LG 980	X	18
22-280	LG 980	X	18
22-295	LG 980	X	18
22-305	LG 980	X	12
22-330	LG 980	X	12
22-355	LG 980	X	12
22-370	LG 980	X	12
22-380	LG 980	X	12
22-395	LG 980	X	12
22-405	LG 980	X	12
22-430	LG 980	X	12
22-455	LG 980	X	12
22-470	LG 980	X	12
22-480	LG 980	X	12
22-495	LG 980	X	12
22-505	LG 980	X	4
22-530	LG 980	X	4
22-555	LG 980	X	4
22-570	LG 980	X	4
22-580	LG 980	X	4
22-595	LG 980	X	4
22-805	LG 980	X	4
22-830	LG 980	X	4
22-855	LG 980	X	4
22-870	LG 980	X	4
22-880	LG 980	X	4
22-895	LG 980	X	4
22-905	LG 980	X	18
22-930	LG 980	X	18
22-955	LG 980	X	18
22-970	LG 980	X	18
22-980	LG 980	X	18
22-995	LG 980	X	18
22STD	SFS 22	X	1
22TALL	SFS 22	X	1
23-131	LG 983	X	4
23-180	LG 983	X	4
23-195	LG 983	X	4
23-331	LG 983	X	12
23-380	LG 983	X	12
23-395	LG 983	X	12
23-530	LG 983	X	4
23-580	LG 983	X	4
23-595	LG 983	X	4
23-705	LG 983	X	12
23-780	LG 983	X	12
23-795	LG 983	X	12
24-008	LG 973	X	10
24-009	LG 973	X	1
24-010	LG 973	X	10
24-011	LG 973	X	10
24-012	LG 973	X	10
24-101	LG 973	X	1
24-102	LG 973	X	1
24-103	LG 973	X	1
24-104	LG 973	X	1
24-200	LG 972	X	1
24-200-B		X	6
24-200-C	LG 972	D	
24-250	LG 972	X	1
24-250-B		X	6
24-250-C	LG 972	D	
24-275	LG 972	X	1
24-280-03	LG 973	X	1
24-280-10	LG 973	X	1
24-280-25	LG 973	X	1
24-295-03	LG 973	X	1
24-295-10	LG 973	X	1
24-295-25	LG 973	X	1
24-500	LG 972	X	1
24-500-B		X	1
24-518-03	LG 973	X	1
24-518-10	LG 973	X	11
24-518-25	LG 973	X	1
24-550	LG 972	X	1
24-595-03	LG 973	X	1
24-595-10	LG 973	X	1
24-595-25	LG 973	X	1
24010E	SFS 96	X	6
26STD	SFS 22	X	1
27-001		X	1
27-500	LG 724	X	1
27-501	LG 724	X	1
27-502	LG 725	X	1
27-503	LG 724	X	1
27-504	LG 725	X	1
30-003	LG 190	X	1
30-009	LG 190	X	1
30-015	LG 194	X	1
30-018	LG 198	X	1
30-019	LG 208	X	1
30-022	LG 179	X	1
30-023	LG 205	X	1
30-024	LG 218	X	1
30-025	LG 208	X	1
30-026	LG 208	X	1
30-027	LG 194	X	1
30-028	LG 182	X	1
30-029	LG 181	X	1
30-030	LG 218	X	1
30-031	LG 218	X	1
30-032	LG 182	X	1
30-033	LG 183	X	1
30-037	LG 199	X	1
30-038	LG 187	X	1
30-039	LG 182	X	1
30-044	LG 179	X	1
30-048	LG 182	X	1
30-049	LG 181	X	1
30-054	LG 200	X	1
30-055	LG 204	X	1
30-056	LG 208	X	1
30-057	LG 200	X	1
30-064	LG 194	X	1
30-066		X	1
30-067	LG 212	X	1
30-068	LG 212	X	1
30-070	LG 216	X	1
30-073	LG 183	X	1
30-074	LG 183	X	1
30-075	LG 185	X	1
30-076	LG 188	X	1
30-077	LG 188	X	1
30-080	LG 205	X	1
30-081	LG 205	X	1
30-082	LG 205	X	1
30-083	LG 219	X	1
30-085	LG 203	X	1
30-087	LG 182	X	1
30-088	LG 203	X	1
30-089	LG 204	X	1
30-091	LG 217	X	1
30-093	LG 206	X	1
30-094	LG 180	X	1
30-095	LG 206	X	1
30-097	LG 179	X	1
30-098	LG 206	X	1
30-100	LG 217	X	1
30-101	LG 179	X	1
30-102	LG 220	X	1
30-104	LG 180	X	1
30-105	LG 179	X	1
30-106	LG 179	X	1
30-107	LG 180	X	1
30-108	LG 180	X	1
30-111	LG 217	X	1
30-112	LG 218	X	1
30-116	LG 219	X	1
30-117	LG 219	X	1
30-119	LG 191	X	1
30-121	LG 190	X	1
30-122	LG 183	X	1
30-123	LG 183	X	1
30-124	LG 197	X	1
30-125	LG 206	X	1
30-130	LG 205	X	1
30-132	LG 179	X	1
30-134	LG 180	X	1
30-135	LG 182	X	1
30-136	LG 182	X	1
30-137	LG 214	X	1
30-139	LG 183	X	1
30-141	LG 217	X	1
30-142	LG 217	X	1
30-145	LG 184	X	1
30-148	LG 198	X	1
30-149	LG 211	X	1
30-153	LG 216	X	1
30-154	LG 213	X	1
30-155	LG 213	X	1
30-156	LG 213	X	1
30-157	LG 201	X	1
30-158	LG 201	X	1
30-159	LG 205	X	1
30-161	LG 184	X	1
30-162	LG 222	X	1
30-163	LG 200	X	1
30-164	LG 200	X	1
30-165	LG 204	X	1

N = New Item
F = NLA after inventories are sold

D = Discontinued after 2019 catalog
X = Active part number

2019 Numerical Index

OREGON	Page	Code	Pk.
30-166	LG 210	X	1
30-167	LG 184	X	1
30-168	LG 185	X	1
30-170	LG 198	X	1
30-172	LG 184	X	1
30-173	LG 184	X	1
30-181	LG 189	X	1
30-182	LG 185	X	1
30-183	LG 189	X	1
30-184	LG 186	X	1
30-185	LG 203	X	1
30-186	LG 184	X	1
30-187	LG 192	X	1
30-188		X	1
30-189	LG 207	X	1
30-190	LG 207	X	1
30-205	LG 219	X	1
30-206	LG 192	N	1
30-207	LG 210	N	1
30-208	LG 188	N	1
30-209	LG 210	N	1
30-210	LG 189	N	1
30-211	LG 179	N	1
30-212	LG 203	N	1
30-215	LG 681	N	1
30-216	LG 681	N	1
30-218	LG 681	N	1
30-220	LG 213	N	1
30-221	LG 213	N	1
30-222	LG 216	N	1
30-223	LG 213	N	1
30-224	LG 200	N	1
30-225	LG 203	N	1
30-301	LG 217	X	1
30-303	LG 198	X	1
30-304	LG 199	X	1
30-305	LG 198	X	1
30-309	LG 199	X	1
30-311	LG 199	X	1
30-313	LG 201	X	1
30-316	LG 208	X	1
30-317	LG 194	X	1
30-318	LG 193	X	1
30-321	LG 199	X	1
30-322	LG 200	X	1
30-325	LG 199	X	1
30-327	LG 199	X	1
30-328	LG 200	X	1
30-329	LG 202	X	1
30-331	LG 203	X	1
30-332	LG 196	X	1
30-333	LG 216	X	1
30-334	LG 196	X	1
30-337	LG 213	X	1
30-345	LG 195	X	1
30-346	LG 195	X	1
30-347	LG 194	X	1
30-365	LG 1025	N	1
30-400	LG 193	X	1
30-401	LG 193	X	1
30-403	LG 192	X	1
30-404	LG 192	X	1
30-405	LG 193	X	1
30-406	LG 193	X	1
30-410	LG 220	X	1
30-412	LG 220	X	1
30-413	LG 221	X	1
30-414	LG 221	X	1
30-415		X	1
30-416	LG 214	X	1
30-417	LG 193	X	1

OREGON	Page	Code	Pk.
30-418	LG 221	X	1
30-419	LG 221	X	1
30-421	LG 220	X	1
30-423	LG 221	X	1
30-430	LG 211	X	1
30-432		X	1
30-436	LG 194	X	1
30-437	LG 192	X	1
30-438	LG 196	X	1
30-439-1	LG 190	X	1
30-441	LG 202	X	1
30-443	LG 218	X	1
30-444	LG 187	X	1
30-445	LG 189	X	1
30-446	LG 188	X	1
30-447	LG 186	X	1
30-448	LG 188	X	1
30-449	LG 188	X	1
30-450	LG 189	X	1
30-451	LG 196	X	1
30-452	LG 195	X	1
30-453	LG 195	X	1
30-454	LG 195	X	1
30-455	LG 196	X	1
30-456	LG 201	X	1
30-457	LG 202	X	1
30-458	LG 207	X	1
30-459	LG 207	X	1
30-460	LG 207	X	1
30-498	LG 210	N	1
30-506	LG 195	X	1
30-527	LG 202	X	1
30-605	LG 204	N	1
30-606	LG 204	N	1
30-608	LG 207	N	1
30-609	LG 204	N	1
30-610	LG 210	N	1
30-611	LG 210	N	1
30-612	LG 195	N	1
30-613	LG 192	N	1
30-616	LG 190	N	1
30-617	LG 190	N	1
30-618	LG 189	N	1
30-619	LG 190	N	1
30-620	LG 189	N	1
30-621	LG 189	N	1
30-622	LG 197	N	1
30-623	LG 198	N	1
30-624	LG 190	N	1
30-625	LG 189	N	1
30-627	LG 197	N	1
30-628	LG 681	N	1
30-629	LG 210	N	1
30-630	LG 197	N	1
30-631	LG 197	N	1
30-632	LG 681	N	1
30-633	LG 198	N	1
30-634	LG 197	N	1
30-636	LG 681	N	1
30-637	LG 197	N	1
30-639	LG 215	N	1
30-640	LG 210	N	1
30-641	LG 198	N	1
30-642	LG 214	N	1
30-643	LG 215	N	1
30-644	LG 215	N	1
30-645	LG 197	N	1
30-646	LG 681	N	1
30-648	LG 197	N	1
30-649	LG 1025	N	1
30-650	LG 221	N	1

OREGON	Page	Code	Pk.
30-651		N	1
30-652	LG 212	N	1
30-653	LG 216	N	1
30-655	LG 191	N	1
30-656	LG 191	N	1
30-657	LG 220	N	1
30-658		N	1
30-700	LG 180	X	1
30-702	LG 185	X	1
30-703	LG 192	X	1
30-704	LG 194	X	1
30-705	LG 200	X	1
30-706	LG 201	X	1
30-708	LG 204	X	1
30-709	LG 194	X	1
30-710	LG 181	X	1
30-711	LG 218	X	1
30-712	LG 205	X	1
30-713	LG 221	X	1
30-717	LG 221	X	1
30-719	LG 212	X	1
30-720	LG 180	X	1
30-721	LG 213	X	1
30-731	LG 180	X	1
30-735	LG 181	X	1
30-736	LG 185	X	1
30-740	LG 218	X	1
30-758	LG 209	X	1
30-761	LG 183	X	1
30-762	LG 183	X	1
30-800	LG 181	X	1
30-801	LG 217	X	1
30-802	LG 192	X	1
30-803	LG 181	X	1
30-804	LG 199	X	1
30-805	LG 193	X	1
30-806	LG 193	X	1
30-807	LG 218	X	1
30-808	LG 193	X	1
30-809	LG 179	X	1
30-810	LG 198	X	1
30-811	LG 180	X	1
30-812	LG 206	X	1
30-813	LG 180	X	1
30-814	LG 199	X	1
30-815	LG 203	X	1
30-816	LG 193	X	1
30-817	LG 218	X	1
30-818	LG 206	X	1
30-819	LG 205	X	1
30-820	LG 182	X	1
30-821	LG 181	X	1
30-822	LG 216	X	1
30-823	LG 182	X	1
30-824	LG 183	X	1
30-825	LG 179	X	1
30-826	LG 181	X	1
30-827	LG 180	X	1
30-828	LG 194	X	1
30-829	LG 183	X	1
30-830	LG 191	X	1
30-831	LG 190	X	1
30-832	LG 194	X	1
30-833	LG 200	X	1
30-834	LG 203	X	1
30-835	LG 200	X	1
30-836	LG 680	X	1
30-837	LG 214	X	1
30-838	LG 215	X	1
30-839	LG 215	X	1
30-840	LG 218	X	1

N = New Item
F = NLA after inventories are sold

D = Discontinued after 2019 catalog
X = Active part number

2019 Numerical Index

OREGON	Page	Code	Pk.
30-841	LG 217	X	1
30-842	LG 217	X	1
30-843	LG 194	X	1
30-844	LG 204	X	1
30-845	LG 208	X	1
30-846	LG 211	X	1
30-847	LG 205	X	1
30-848	LG 206	X	1
30-849	LG 204	X	1
30-850	LG 218	X	1
30-851	LG 184	X	1
30-852	LG 184	X	1
30-853	LG 213	X	1
30-903	LG 186	X	1
30-906	LG 185	X	1
30-907	LG 186	X	1
30-908	LG 185	X	1
30-909	LG 186	X	1
30-910	LG 186	X	1
30-911		X	1
30-913	LG 185	X	1
30-914	LG 187	X	1
30-915	LG 187	X	1
30-916	LG 185	X	1
30-917	LG 186	X	1
30-919	LG 188	X	1
30-920	LG 186	X	1
30-921	LG 202	X	1
30-923	LG 186	X	1
30-924	LG 186	X	1
30-925	LG 187	X	1
30-926	LG 187	X	1
30-927	LG 187	X	1
30-928		X	1
30-929	LG 187	X	1
30-930	LG 187	X	1
30-931	LG 191	X	1
30-932	LG 196	X	1
30-933	LG 195	X	1
30-934	LG 195	X	1
30-935	LG 201	X	1
30-936	LG 202	X	1
30-937	LG 202	X	1
30-938	LG 202	X	1
30-939	LG 202	X	1
30-940	LG 202	X	1
30-941	LG 219	X	1
30-942	LG 206	X	1
30-943	LG 206	X	1
30-944	LG 207	X	1
30-945	LG 207	X	1
30-946	LG 207	X	1
30-947	LG 207	X	1
30-949	LG 209	X	1
30-950	LG 209	X	1
30-951	LG 219	X	1
30-952	LG 219	X	1
30-953	LG 211	X	1
30-954	LG 220	X	1
30-955	LG 212	X	1
30-956	LG 216	X	1
30-957	LG 209	X	1
30-959	LG 219	X	1
30-960	LG 187	X	1
30-961	LG 187	X	1
30-962	LG 188	X	1
30-963	LG 195	X	1
30-964	LG 212	X	1
30-965	LG 212	X	1
30-966	LG 203	X	1
30-968	LG 222	X	1

OREGON	Page	Code	Pk.
30-974	LG 188	X	1
30-975	LG 188	X	1
3010E	SFS 89	X	1
30STD	SFS 22	X	1
31-002	LG 933	X	1
31-004	LG 929	X	10
31-006	LG 935	X	1
31-010	LG 935	X	1
31-011	LG 931	X	1
31-013	LG 928	X	1
31-014	LG 934	X	1
31-020	LG 923	X	1
31-023	LG 933	X	1
31-025	LG 930	X	1
31-026	LG 928	X	1
31-027	LG 931	X	1
31-028	LG 928	X	1
31-032	LG 928	X	1
31-034	LG 933	X	1
31-037	LG 928	X	1
31-041	LG 932	X	1
31-047	LG 925	X	1
31-049	LG 923	X	1
31-050	LG 924	X	1
31-051	LG 924	X	1
31-052	LG 923	X	1
31-054	LG 924	X	1
31-056	LG 927	X	1
31-057	LG 930	X	1
31-058	LG 931	X	1
31-060	LG 922	X	1
31-061	LG 922	X	1
31-062	LG 922	X	1
31-063	LG 932	X	1
31-064	LG 931	X	1
31-065	LG 922	X	1
31-066	LG 923	X	1
31-067	LG 935	X	1
31-068	LG 922	X	1
31-070	LG 922	X	1
31-071	LG 923	X	1
31-072	LG 923	X	1
31-074	LG 923	X	1
31-075	LG 923	X	1
31-081	LG 936	X	1
31-083	LG 930	X	1
31-087	LG 930	X	1
31-090	LG 930	X	1
31-091	LG 930	X	1
31-092	LG 931	X	1
31-093	LG 932	X	10
31-094	LG 932	X	1
31-100	LG 929	X	10
31-103	LG 933	X	1
31-105	LG 934	X	1
31-108	LG 931	X	1
31-109	LG 929	X	1
31-114	LG 936	X	1
31-115	LG 934	X	1
31-116	LG 925	X	1
31-117	LG 925	X	1
31-119	LG 924	X	1
31-120	LG 924	X	1
31-121	LG 924	X	1
31-140	LG 937	X	1
31-142	LG 937	X	1
31-150	LG 937	X	1
31-152	LG 937	X	1
31-160	LG 937	X	1
31-180	LG 937	X	1
31-230	LG 937	X	1

OREGON	Page	Code	Pk.
31-232	LG 937	X	1
31-240	LG 937	X	1
31-242	LG 937	X	1
31-250	LG 937	X	1
31-252	LG 937	X	1
31-260	LG 937	X	1
31-540	LG 937	X	1
31-542	LG 937	X	1
31-550	LG 937	X	1
31-552	LG 937	X	1
31-604	LG 937	X	1
31-635	LG 937	X	1
31-642	LG 937	X	1
31-650	LG 937	X	1
31-732	LG 937	X	1
31-740	LG 937	X	1
31-742	LG 937	X	1
31-750	LG 937	X	1
31-752	LG 937	X	1
31-760	LG 937	X	1
31-900-0	LG 929	X	1
31-904	LG 930	X	10
31-907	LG 929	X	1
31-908	LG 929	X	1
31-909	LG 928	X	1
31-910	LG 929	X	1
31-911	LG 929	X	1
31-912	LG 929	X	1
31-913	LG 930	X	1
31-914	LG 930	X	1
31-918	LG 922	X	1
31-919	LG 922	X	1
31-920	LG 922	X	1
32-100	LG 676	X	1
32-101	LG 676	X	1
32-103	LG 676	X	1
32-105	LG 676	X	1
32-106	LG 676	X	1
32-107	LG 676	X	1
32-108	LG 676	X	1
32-110	LG 676	X	1
32-111	LG 676	X	1
32-112	LG 676	X	1
32-114	LG 676	X	1
32-116	LG 676	X	1
33-002	LG 946	X	1
33-003	LG 926	X	1
33-005	LG 927	X	1
33-006	LG 927	X	1
33-007	LG 926	X	1
33-008	LG 789	X	1
33-013	LG 949	X	1
33-015	LG 948	X	1
33-016	LG 789	X	1
33-019	LG 948	X	1
33-021	LG 950	X	1
33-023	LG 949	X	1
33-024	LG 945	X	1
33-026	LG 947	X	1
33-027	LG 947	X	1
33-028	LG 947	X	1
33-029-1	LG 927	X	1
33-031	LG 742	X	10
33-032	LG 742	X	10
33-033	LG 742	X	10
33-034	LG 742	X	10
33-035	LG 742	X	10
33-038	LG 742	X	1
33-053	LG 789	X	1
33-070	LG 742	X	1
33-074	LG 944	X	1

N = New Item
F = NLA after inventories are sold

D = Discontinued after 2019 catalog
X = Active part number

2019 Numerical Index

OREGON	Page	Code	Pk.
33-081	LG 946	X	1
33-082	LG 946	X	1
33-083	LG 947	X	1
33-084	LG 948	X	1
33-085	LG 948	X	1
33-086	LG 948	X	1
33-089	LG 946	X	1
33-090	LG 948	X	1
33-093	LG 946	X	1
33-094	LG 946	X	1
33-099	LG 946	X	1
33-104	LG 735	X	1
33-105	LG 943	X	1
33-106	LG 943	X	1
33-110	LG 735	X	1
33-111	LG 735	X	1
33-112	LG 735	X	1
33-113	LG 740	X	1
33-114	LG 734	X	1
33-115	LG 738	X	1
33-116	LG 735	X	1
33-117	LG 733	X	1
33-118-1	LG 733	X	1
33-119-1	LG 734	X	1
33-120	LG 734	X	1
33-121	LG 734	X	1
33-122-1	LG 734	X	1
33-124	LG 736	X	1
33-125-1	LG 736	X	1
33-126-1	LG 736	X	1
33-127	LG 737	X	1
33-128-1	LG 741	X	1
33-130	LG 733	X	1
33-132	LG 735	X	1
33-133	LG 736	X	1
33-134	LG 736	X	1
33-135	LG 737	X	1
33-136	LG 737	X	1
33-137	LG 737	X	1
33-138	LG 738	X	1
33-139	LG 736	X	1
33-150	LG 787	X	1
33-151	LG 785	X	1
33-152	LG 942	X	1
33-153	LG 737	X	1
33-154	LG 741	X	1
33-155	LG 738	X	1
33-156	LG 738	X	1
33-157	LG 738	X	1
33-158	LG 949	X	1
33-159	LG 733	X	1
33-180	LG 949	X	1
33-182-0	LG 789	X	1
33-183	LG 735	X	1
33-184	LG 737	X	1
33-185	LG 737	X	1
33-186	LG 789	X	1
33-187	LG 738	X	1
33-188	LG 738	X	1
33-189	LG 740	X	1
33-190	LG 741	X	1
33-200	LG 866	X	1
33-201	LG 867	X	10
33-204	LG 787	X	1
33-206	LG 949	X	1
33-207	LG 949	X	1
33-208	LG 866	X	1
33-210	LG 867	X	10
33-213	LG 787	X	1
33-215	LG 866	X	1
33-216	LG 866	X	1

OREGON	Page	Code	Pk.
33-240	LG 948	X	1
33-242	LG 729	X	1
33-243	LG 786	X	1
33-244	LG 786	X	1
33-245	LG 786	X	1
33-246	LG 732	X	1
33-247	LG 731	X	1
33-248	LG 731	X	1
33-249	LG 731	X	1
33-253	LG 731	X	1
33-254	LG 785	X	1
33-255	LG 736	X	1
33-256	LG 946	X	1
33-261	LG 733	X	1
33-263	LG 739	X	1
33-264	LG 739	X	1
33-265	LG 739	X	1
33-266	LG 739	X	1
33-267	LG 739	X	1
33-269	LG 739	X	1
33-270	LG 739	X	1
33-271	LG 739	X	1
33-272	LG 740	X	1
33-273	LG 740	X	1
33-274	LG 740	X	1
33-275	LG 740	X	1
33-276	LG 740	X	1
33-277	LG 740	X	1
33-301	LG 743	X	10
33-302	LG 743	X	10
33-307	LG 743	X	10
33-312	LG 743	X	10
33-313	LG 743	X	10
33-317-0	LG 729	X	1
33-318-0	LG 729	X	1
33-319-0	LG 729	X	1
33-320-0	LG 731	X	1
33-330	LG 729	X	1
33-331	LG 730	X	1
33-332	LG 730	X	1
33-333	LG 786	X	1
33-334	LG 730	X	1
33-335	LG 730	X	1
33-336	LG 730	X	1
33-337	LG 730	X	1
33-340	LG 784	X	1
33-341	LG 784	X	1
33-342	LG 784	X	1
33-343	LG 787	X	1
33-344	LG 784	X	1
33-345	LG 784	X	1
33-346	LG 786	X	1
33-347	LG 784	X	1
33-348	LG 785	X	1
33-350	LG 949	X	1
33-351	LG 949	X	10
33-352-0	LG 784	X	1
33-353	LG 785	X	1
33-362	LG 784	X	1
33-363	LG 787	X	1
33-365	LG 784	X	1
33-375	LG 942	X	1
33-376	LG 942	X	1
33-377	LG 943	X	1
33-379	LG 945	X	1
33-382	LG 947	X	1
33-383	LG 944	X	1
33-384	LG 947	X	1
33-385	LG 942	X	1
33-386	LG 942	X	1
33-387	LG 945	X	1

OREGON	Page	Code	Pk.
33-388	LG 943	X	1
33-389	LG 945	X	1
33-390		D	1
33-391	LG 945	X	1
33-392	LG 944	X	1
33-393	LG 943	X	1
33-394	LG 944	X	1
33-395	LG 943	X	1
33-396	LG 944	X	1
33-397	LG 942	X	1
33-398	LG 944	X	1
33-399	LG 944	X	1
33-400	LG 732	X	1
33-401	LG 732	X	1
33-402	LG 731	X	1
33-407	LG 732	X	1
33-410	LG 947	X	1
33-411	LG 732	X	1
33-414	LG 741	X	1
33-415	LG 741	X	1
33-417	LG 731	X	1
33-418	LG 731	X	1
33-419	LG 732	X	1
33-420	LG 741	X	1
33-430	LG 729	X	1
33-431	LG 729	X	1
33-500-0	LG 744	X	1
33-502	LG 743	X	1
33-516	LG 866	X	1
33-518	LG 785	X	1
33-519	LG 785	X	1
33-520	LG 785	X	1
33-521	LG 785	X	1
33-522	LG 785	X	1
33-525	LG 786	X	1
33-526	LG 928	X	1
33-527	LG 928	X	1
33-540	LG 950	X	1
33-541	LG 950	X	1
33-542	LG 950	X	1
33-601	LG 789	X	1
33-606	LG 789	X	1
33-628	LG 789	X	1
33-700	LG 915	X	1
33-702	LG 919	X	1
33-704	LG 919	X	1
33-707	LG 920	X	1
33-708	LG 915	X	1
33-709	LG 916	X	1
33-710	LG 918	X	1
33-711	LG 921	X	1
33-712	LG 921	X	1
33-713	LG 921	X	1
33-714	LG 918	X	1
33-715	LG 919	X	1
33-716	LG 921	X	1
33-718	LG 919	X	1
33-719	LG 915	X	1
33-720	LG 920	X	1
33-721	LG 920	X	1
33-722	LG 918	X	1
33-728	LG 917	X	1
33-729	LG 917	X	1
33-730	LG 917	X	1
33-732	LG 920	X	1
33-733	LG 917	X	1
33-734	LG 917	X	1
33-735	LG 917	X	1
33-738	LG 921	X	1
33-739	LG 921	X	1
33-740	LG 916	X	1

N = New Item
F = NLA after inventories are sold

D = Discontinued after 2019 catalog
X = Active part number

OREGON	Page	Code	Pk.
33-741	LG 917	X	1
33-742		X	1
33-743	LG 918	X	1
33-744	LG 918	X	1
33-745	LG 920	X	1
33-746	LG 920	X	1
33-751	LG 927	X	1
33-754	LG 927	X	1
33-759-0	LG 926	X	1
33-760-0	LG 926	X	1
33-761	LG 926	X	1
33-762-0	LG 926	X	1
33-768-0	LG 926	X	1
33-770	LG 915	X	1
33-771	LG 916	X	1
33-772	LG 916	X	1
33-774	LG 919	X	1
33-777	LG 920	X	1
33-778	LG 915	X	1
33-779	LG 916	X	1
33-791	LG 921	X	1
33-792	LG 918	X	1
33-793	LG 918	X	1
33-794	LG 918	X	1
33-795	LG 917	X	1
34-001	LG 821	X	1
34-002	LG 821	X	1
34-003	LG 821	X	1
34-004	LG 832	X	1
34-005	LG 821	X	1
34-006	LG 821	X	1
34-007	LG 826	X	1
34-008	LG 821	X	1
34-009	LG 821	X	1
34-010	LG 831	X	1
34-011	LG 821	X	1
34-012	LG 821	X	1
34-013	LG 824	X	1
34-014	LG 831	X	1
34-015	LG 821	X	1
34-016	LG 824	X	1
34-017	LG 821	X	1
34-018	LG 821	X	1
34-019	LG 821	X	1
34-020	LG 821	X	1
34-021	LG 833	X	1
34-022	LG 822	X	1
34-023	LG 822	X	1
34-024	LG 822	X	1
34-025	LG 821	X	1
34-027	LG 821	X	1
34-028	LG 821	X	1
34-029	LG 821	X	1
34-030	LG 821	X	1
34-031	LG 821	X	1
34-032	LG 834	X	1
34-033	LG 821	X	1
34-034	LG 821	X	1
34-035	LG 821	X	1
34-036	LG 821	X	1
34-037	LG 821	X	1
34-038	LG 821	X	1
34-039	LG 834	X	1
34-041	LG 831	X	1
34-042	LG 823	X	1
34-043	LG 823	X	1
34-044	LG 821	X	1
34-046	LG 824	X	1
34-049	LG 824	X	1
34-050	LG 823	X	1
34-051	LG 823	X	1

OREGON	Page	Code	Pk.
34-052	LG 823	X	1
34-053	LG 823	X	1
34-055	LG 823	X	1
34-056	LG 823	X	1
34-057	LG 823	X	1
34-058	LG 823	X	1
34-060	LG 823	X	1
34-061	LG 823	X	1
34-062	LG 823	X	1
34-063	LG 823	X	1
34-064	LG 823	X	1
34-065	LG 837	X	1
34-066	LG 832	X	1
34-100	LG 830	X	1
34-102	LG 830	X	1
34-103	LG 830	X	1
34-104	LG 830	X	1
34-106	LG 830	X	1
34-107	LG 823	X	1
34-109	LG 831	X	1
34-201	LG 822	X	1
34-205	LG 826	X	1
34-206	LG 826	X	1
34-209	LG 826	X	1
34-210	LG 834	X	1
34-301	LG 827	N	1
34-302	LG 828	N	1
34-308	LG 827	N	1
34-309	LG 828	N	1
34-313	LG 828	N	1
34-318	LG 825	N	1
34-810	LG 725	X	1
34-820	LG 833	X	1
34-822	LG 832	X	1
34-824	LG 832	X	1
34-826	LG 833	X	1
34-901	LG 825	N	1
34-902	LG 825	N	1
34-903	LG 825	N	1
34-904	LG 825	N	1
34-905	LG 825	N	1
34-906	LG 828	N	1
34-907		N	1
34-908	LG 828	N	1
35-001	LG 806	X	1
35-002	LG 806	X	1
35-003	LG 809	X	1
35-004	LG 806	X	1
35-005	LG 806	X	1
35-006	LG 808	X	1
35-007	LG 806	X	1
35-008	LG 808	X	1
35-010	LG 809	X	1
35-012	LG 806	X	1
35-014	LG 806	X	1
35-015	LG 810	X	1
35-016	LG 809	X	1
35-021	LG 810	X	1
35-022	LG 807	X	1
35-023	LG 806	X	1
35-026	LG 807	X	1
35-027	LG 807	X	1
35-028	LG 810	X	1
35-032	LG 809	X	1
35-033	LG 809	X	1
35-034	LG 807	X	1
35-036	LG 807	X	1
35-037	LG 808	X	1
35-038	LG 808	X	1
35-041	LG 808	X	1
35-043	LG 808	X	1

OREGON	Page	Code	Pk.
35-044	LG 808	X	1
35-045	LG 808	X	1
35-050	LG 809	X	1
35-543	LG 807	X	1
36-001		D	1
36-005	LG 750	X	1
36-022	LG 750	X	1
36-027	LG 750	X	1
36-028	LG 750	X	1
36-041	LG 754	X	1
36-042	LG 754	X	1
36-043	LG 754	X	1
36-044	LG 754	X	1
36-045	LG 754	X	1
36-046	LG 754	X	1
36-100	LG 750	X	1
36-101	LG 750	X	1
36-102	LG 750	X	1
36-103	LG 750	X	1
36-104	LG 750	X	1
36-140	LG 755	X	1
36-141	LG 755	X	1
36-142	LG 755	X	1
36-143	LG 755	X	1
36-243	LG 754	X	1
36-244	LG 754	X	1
36-245	LG 754	X	1
36-246	LG 754	X	1
36-325	LG 755	X	1
36-326	LG 755	X	1
36-414	LG 780	N	1
36-416	LG 757	N	1
36-419	LG 689	N	1
36-420	LG 690	N	1
36-422	LG 866	N	1
36-423	LG 866	N	1
36-424	LG 866	N	1
36-425	LG 866	N	1
36-427	LG 866	N	1
36-428	LG 867	N	1
36-429		N	1
36-521	LG 755	X	1
36-522	LG 755	X	1
36-523	LG 755	X	1
36-524	LG 755	X	1
36-530	LG 755	X	1
36-531	LG 755	X	1
36-535	LG 755	X	1
37-619		D	10
37-622		D	10
37-624		D	20
37-633		D	1
37-638		D	10
37-643		D	5
37-645		D	5
37-648		D	20
37-654		D	5
37-663		D	5
37-664		D	1
37-666		D	1
37-669		D	10
37-670		D	10
37-671		D	10
37-672		D	10
37-673		D	10
390-698	LG 542	X	6
391-526	LG 416	X	6
391-574	LG 559	X	6
391-591	LG 481	X	6
391-595	LG 493	X	6
391-598	LG 583	X	6

N = New Item
F = NLA after inventories are sold

D = Discontinued after 2019 catalog
X = Active part number

2019 Numerical Index

OREGON	Page	Code	Pk.
391-605	LG 544	X	6
391-606	LG 547	X	6
391-607	LG 511	X	6
391-608	LG 443	X	6
391-610	LG 554	X	6
391-612	LG 500	X	6
391-613	LG 498	X	6
391-614	LG 548	X	6
391-617	LG 497	X	6
391-731	LG 558	X	6
392-013	LG 480	X	6
392-025	LG 440	X	6
392-047	LG 497	X	6
392-057	LG 443	X	6
392-133	LG 382	X	6
392-138	LG 397	X	6
392-139	LG 398	X	6
392-141	LG 413	X	6
392-142	LG 413	X	6
392-165	LG 580	X	6
392-201	LG 440	X	6
392-203	LG 442	X	6
392-204	LG 443	X	6
392-205	LG 436	X	6
392-206	LG 436	X	6
392-208	LG 472	X	6
392-300	LG 382	X	6
392-301	LG 382	X	6
392-302	LG 382	X	6
392-416	LG 374	X	6
392-677	LG 559	X	6
393-026	LG 388	X	6
393-601	LG 582	X	6
394-075	LG 571	X	6
394-129	LG 441	X	6
396-321	LG 562	X	6
396-322	LG 438	X	6
396-352	LG 489	X	6
396-354	LG 484	X	6
396-524	LG 415	X	6
396-612	LG 499	X	6
396-629	LG 393	X	6
396-702	LG 480	X	6
396-703	LG 502	X	6
396-704	LG 414	X	6
396-706	LG 538	X	6
396-707	LG 395	X	6
396-709	LG 489	X	6
396-710	LG 492	X	6
396-712	LG 449	X	6
396-713	LG 577	X	6
396-714	LG 413	X	6
396-716	LG 451	X	6
396-719	LG 488	X	6
396-723	LG 413	X	6
396-725	LG 538	X	6
396-726	LG 391	X	6
396-727	LG 467	X	6
396-728	LG 503	X	6
396-729	LG 449	X	6
396-730	LG 490	X	6
396-731	LG 427	X	6
396-732	LG 484	X	6
396-734	LG 489	X	6
396-735	LG 452	X	6
396-737	LG 583	X	6
396-738	LG 485	X	6
396-739	LG 479	X	6
396-740	LG 415	X	6
396-743	LG 493	X	6
396-748	LG 499	X	6

OREGON	Page	Code	Pk.
396-752	LG 415	X	6
396-764	LG 537	X	6
396-769	LG 488	X	6
396-770	LG 485	X	6
396-771	LG 492	X	6
396-775	LG 493	X	6
396-778	LG 394	X	6
396-787	LG 500	X	6
396-796	LG 498	X	6
396-798	LG 469	X	6
396-800	LG 464	X	6
396-803	LG 438	X	6
396-805	LG 452	X	6
396-806	LG 453	X	6
396-807	LG 454	X	6
396-809	LG 370	X	6
396-810	LG 499	X	6
396-812	LG 498	X	6
396-814	LG 501	X	6
396-815	LG 521	X	6
396-816	LG 500	X	6
398-672	LG 515	X	6
40-002	LG 588	X	50
40-004	LG 588	X	50
40-009	LG 588	X	50
40-010	LG 588	X	50
40-110	LG 584	X	50
40-121	LG 584	X	50
40-130	LG 586	X	50
40-131	LG 586	X	50
40-132	LG 586	X	50
40-139	LG 584	X	50
40-140	LG 584	X	50
40-141	LG 585	X	50
40-142	LG 584	X	50
40-143	LG 587	X	50
40-144	LG 587	X	50
40-147	LG 588	X	50
40-316	LG 586	X	50
40-402	LG 589	X	50
40-403	LG 589	X	50
40-408	LG 589	X	50
40-409	LG 585	X	50
40-411	LG 589	X	50
40-502	LG 586	X	50
40-503	LG 589	X	50
40-514	LG 589	X	50
40-518	LG 589	X	50
40-519	LG 584	X	1
40-703	LG 590	X	1
40-707	LG 590	X	1
40-807	LG 585	X	50
40-840	LG 588	X	50
40-843	LG 588	X	50
40-845	LG 588	X	50
40-951	LG 587	X	50
40092	SFS 82	X	48
4020L	SFS 116	X	1
4020XL	SFS 116	X	1
4049H		X	12
4050T	SFS 92	X	10
4067V	SFS 83	X	12
4086KH	SFS 94	X	12
4090L	SFS 116	X	1
4090XL	SFS 116	X	1
41-005	LG 728	X	1
41-008	LG 590	X	1
41-899	LG 590	X	1
41-920	LG 1014	X	10
41-921	LG 1014	X	10
41-922	LG 1014	X	10

OREGON	Page	Code	Pk.
41-923	LG 1014	X	10
41-924	LG 1014	X	10
41-925	LG 1014	X	10
41-926	LG 1014	X	10
41-927	LG 1014	X	10
41-928	LG 1014	X	10
41-929	LG 1014	X	10
41-930	LG 1014	X	10
41-931	LG 1014	X	10
41-932	LG 1014	X	10
41-933	LG 1014	X	10
41-935	LG 1014	X	10
41-936	LG 1014	X	10
41-937	LG 1014	X	10
41-938	LG 1014	X	20
41-939	LG 1014	X	20
4117D	SFS 94	X	1
4120H	SFS 92	X	12
4126P	SFS 94	X	12
42-001	LG 744	X	1
42-005	LG 744	X	12
42-007	LG 744	X	12
42-008	LG 945	X	10
42-009	LG 945	X	1
42-031	SFS 65	X	1
42-032	SFS 74	X	1
42-041	SFS 76	X	1
42-043	SFS 74	X	1
42-044	SFS 74	X	1
42-047	SFS 63	X	1
42-050	SFS 77	X	1
42-061	LG 1018	N	1
42-063	SFS 74	X	1
42-064	SFS 75	X	1
42-066	SFS 77	X	1
42-073	SFS 65	X	1
42-079	SFS 78	X	1
42-080	LG 742	X	1
42-081	LG 742	X	1
42-086		X	1
42-087	SFS 65	X	1
42-090	SFS 64	X	1
42-091	SFS 64	X	1
42-095	SFS 64	X	30
42-100	SFS 63	X	1
42-115-0		X	1
42-130	SFS 118	X	10
42-131	SFS 118	X	10
42-132	SFS 118	X	10
42-133	SFS 118	X	10
42-134	SFS 118	X	10
42-135	SFS 119	X	10
42-136	SFS 118	X	10
42-137	SFS 119	X	10
42-138	SFS 119	X	10
42-139	SFS 119	X	10
42-141	SFS 117	X	10
42-142	SFS 117	X	10
42-143	SFS 117	X	10
42-144	SFS 117	X	10
42-149	SFS 21	X	1
42-152	SFS 119	X	10
42-160	SFS 120	X	1
42-161	SFS 120	X	1
42-162	SFS 120	X	1
42-163	SFS 119	X	10
42-171		X	1
42-172	SFS 78	X	1
42-173	SFS 78	X	1
42-174	SFS 78	X	1
42-175	SFS 78	X	1

N = New Item
F = NLA after inventories are sold

D = Discontinued after 2019 catalog
X = Active part number

OREGON	Page	Code	Pk.
42-176	SFS 78	X	1
42-178	SFS 78	X	1
42-179		X	1
42-183	SFS 78	X	1
42-184		X	1
42-185		X	1
42-187	SFS 78	X	1
42-188	SFS 78	X	1
42-189	SFS 75	X	1
42-192	SFS 78	X	1
42-195	SFS 78	X	1
42-196	SFS 74	X	1
42-199	SFS 75	X	1
42-204	SFS 75	X	1
42-205		X	1
42-206	SFS 78	X	1
42-207	SFS 76	X	1
42-208	SFS 76	X	1
42-215	SFS 21	X	10
42-217	SFS 66	X	1
42-218	SFS 78	X	1
42-219	LG 42	X	1
42-301	SFS 66	X	1
42-311	SFS 66	X	1
42-333	SFS 66	X	1
42-411	SFS 65	X	1
42-422	SFS 65	X	1
42-423	SFS 67	X	1
42-424	SFS 66	X	1
42-427-0	SFS 66	X	1
42-430-0	SFS 64	X	1
42-431-0	SFS 64	X	1
42-432-0	SFS 64	X	1
42-434-0	SFS 64	X	1
42-441	SFS 65	X	1
42-446-0	SFS 65	X	1
42-450-0	SFS 67	X	1
42-452	LG 867	X	1
42-455	LG 721	X	1
42-480-0	SFS 66	X	1
42-505-0	SFS 65	X	1
42-516	SFS 67	X	1
42-550		X	1
42-551		X	1
42-552		X	1
42-555	LG 803	X	1
42-557	LG 803	X	1
42-560-0	SFS 121	X	1
42-561-0	SFS 121	X	1
42-961	SFS 67	X	6
4205M	LG 761	X	12
4244M	SFS 93	X	12
43-011	LG 935	X	1
43-012	LG 927	X	10
43-014	LG 932	X	1
43-018	LG 936	X	1
43-019	LG 931	X	1
43-021	LG 934	X	1
43-025	LG 913	X	1
43-034	LG 934	N	1
43-035	LG 913	N	1
43-037	LG 927	N	1
43-075		D	1
43-100	LG 932	X	1
43-200	LG 932	X	1
43-400-0	LG 936	X	1
43-403	LG 936	X	1
43-404	LG 928	X	1
43-417	LG 936	X	1
43-425	LG 936	X	1
43-426	LG 936	X	1

OREGON	Page	Code	Pk.
43-509	LG 936	X	1
43-532	LG 936	X	1
43-540	LG 936	X	1
43-562	LG 936	X	1
43-685	LG 936	X	1
43-694	LG 936	X	1
43-699	LG 936	X	1
44-100	LG 837	X	1
44-101	LG 837	X	1
44-102	LG 85	X	1
44-103	LG 838	X	1
44-301	LG 840	X	1
44-302	LG 841	X	1
44-306	LG 840	X	1
44-310	LG 840	X	1
44-312	LG 840	X	1
44-313	LG 840	X	1
44-316	LG 840	X	1
44-318	LG 840	X	1
44-319	LG 840	X	1
44-321	LG 840	X	1
44-322	LG 840	X	1
44-323	LG 838	X	1
44-331	LG 841	X	1
44-332	LG 838	X	1
44-339	LG 841	X	1
44-340	LG 838	X	1
44-341	LG 839	X	1
44-342	LG 839	X	1
44-343	LG 841	X	1
44-347	LG 840	X	1
44-348	LG 840	X	1
44-351	LG 840	X	1
44-353	LG 840	X	1
44-356	LG 839	X	1
44-364	LG 728	X	1
44-365	LG 837	X	1
44-366	LG 837	X	1
44-367	LG 838	X	1
44-368	LG 837	X	1
44-369	LG 837	X	1
44-370	LG 834	X	1
44-371	LG 834	X	1
44-500	LG 840	X	1
44-501	LG 836	X	1
44-502	LG 836	X	1
44-503	LG 836	X	1
44-504	LG 836	X	1
44-505	LG 836	X	1
44-506	LG 836	X	1
45-000	LG 237	X	1
45-002	LG 237	X	1
45-003	LG 244	X	1
45-004	LG 235	X	1
45-006	LG 249	X	1
45-007	LG 853	X	1
45-008	LG 853	X	1
45-009	LG 853	X	1
45-010	LG 238	X	1
45-012	LG 224	X	1
45-013	LG 853	X	1
45-014	LG 225	X	1
45-015	LG 233	X	1
45-018	LG 247	X	1
45-019	LG 239	X	1
45-022	LG 243	X	1
45-023	LG 249	X	1
45-025	LG 247	X	1
45-030	LG 245	X	1
45-031	LG 232	X	1
45-034	LG 224	X	1

OREGON	Page	Code	Pk.
45-035	LG 226	X	1
45-037	LG 242	X	1
45-038	LG 224	X	1
45-040	LG 249	X	1
45-043	LG 243	X	1
45-045	LG 249	X	1
45-046	LG 241	X	1
45-047	LG 241	X	1
45-048	LG 854	X	1
45-050	LG 224	X	1
45-053	LG 230	X	1
45-057	LG 249	X	1
45-058	LG 232	X	1
45-060	LG 234	X	1
45-063	LG 230	X	1
45-064	LG 236	X	1
45-065	LG 236	X	1
45-066	LG 236	X	1
45-070	LG 242	X	1
45-071	LG 242	X	1
45-072	LG 242	X	1
45-073	LG 227	X	1
45-074	LG 242	X	1
45-075	LG 241	X	1
45-078	LG 230	X	1
45-079	LG 249	X	1
45-080	LG 249	X	1
45-081	LG 249	X	1
45-082	LG 854	X	1
45-083	LG 246	X	1
45-087	LG 243	X	1
45-088	LG 240	X	1
45-091	LG 249	X	1
45-092	LG 854	X	1
45-094	LG 249	X	1
45-095	LG 855	X	1
45-098	LG 243	X	1
45-100	LG 239	X	1
45-103	LG 938	X	1
45-104	LG 939	X	1
45-107	LG 245	X	1
45-108	LG 894	X	1
45-109	LG 939	X	1
45-110	LG 245	X	10
45-111	LG 939	X	1
45-112	LG 241	X	1
45-113	LG 242	X	1
45-114	LG 938	X	1
45-116	LG 939	X	1
45-117	LG 938	X	1
45-118	LG 760	X	1
45-120		N	1
45-121	LG 230	X	1
45-124	LG 938	X	1
45-127	LG 244	X	1
45-128	LG 228	X	1
45-130	LG 232	X	1
45-132	LG 939	X	1
45-135	LG 894	X	1
45-142	LG 939	X	1
45-143	LG 939	X	1
45-144	LG 941	X	1
45-145	LG 804	X	1
45-146	LG 804	X	1
45-188	LG 230	X	1
45-205	LG 228	X	1
45-206	LG 231	X	1
45-207	LG 236	X	1
45-208	LG 245	X	1
45-209	LG 246	X	1
45-216	LG 224	X	1

N = New Item
F = NLA after inventories are sold

D = Discontinued after 2019 catalog
X = Active part number

2019 Numerical Index

OREGON	Page	Code	Pk.
45-220	LG 232	X	1
45-225	LG 232	X	1
45-227	LG 234	X	1
45-234	LG 224	X	1
45-241	LG 224	X	1
45-242	LG 243	X	1
45-243	LG 243	X	1
45-244	LG 224	X	1
45-245	LG 224	X	1
45-249	LG 224	X	1
45-250	LG 243	X	1
45-253	LG 224	X	1
45-254	LG 224	X	1
45-255	LG 224	X	1
45-256	LG 224	X	1
45-257	LG 245	X	1
45-258	LG 224	X	1
45-259	LG 224	X	1
45-260	LG 224	X	1
45-263	LG 224	X	1
45-264	LG 224	X	1
45-266	LG 247	X	1
45-267	LG 235	X	1
45-268	LG 227	X	1
45-269	LG 227	X	1
45-270	LG 227	X	1
45-271	LG 227	X	1
45-272	LG 227	X	1
45-273		X	1
45-275	LG 225	X	10
45-276	LG 231	X	1
45-277	LG 242	X	1
45-278	LG 240	X	1
45-279	LG 855	X	1
45-280	LG 231	X	1
45-281	LG 240	X	1
45-295	LG 232	X	1
45-300	LG 804	X	1
45-301	LG 804	X	1
45-302	LG 804	X	1
45-303	LG 804	X	1
45-305	LG 804	X	1
45-306	LG 804	X	1
45-404	LG 234	X	1
45-620	LG 225	X	1
45-634	LG 675	X	1
45-831	LG 234	X	1
45-833	LG 855	X	1
45-834	LG 242	X	1
4510E	SFS 90	X	1
4521K	SFS 93	X	12
4525I	SFS 94	X	12
46-002	LG 856	X	1
46-004	LG 707	X	1
46-005	LG 707	X	1
46-006	LG 712	X	1
46-024	LG 719	X	1
46-032	LG 705	X	1
46-033	LG 714	X	1
46-034	LG 714	X	1
46-035	LG 714	X	1
46-036	LG 714	X	1
46-038	LG 715	X	1
46-039	LG 705	X	1
46-041	LG 706	X	1
46-042	LG 715	X	1
46-043	LG 715	X	1
46-044	LG 710	X	1
46-046	LG 704	X	1
46-047	LG 704	X	1
46-048	LG 711	X	1

OREGON	Page	Code	Pk.
46-049	LG 705	X	1
46-050	LG 711	X	1
46-051	LG 712	X	1
46-200	LG 722	X	1
46-300	LG 717	X	1
46-302	LG 709	X	1
46-304	LG 723	X	1
46-306	LG 708	X	1
46-310	LG 713	X	1
46-315	LG 717	X	1
46-316	LG 707	X	1
46-317	LG 707	X	1
46-319	LG 712	X	1
46-320	LG 707	X	1
46-321	LG 707	X	1
46-322	LG 701	X	1
46-323	LG 712	X	1
46-325	LG 701	X	1
46-327	LG 717	X	1
46-328	LG 717	X	1
46-330	LG 701	X	1
46-332	LG 720	X	1
46-333	LG 709	X	1
46-334	LG 719	X	1
46-335	LG 719	X	1
46-336	LG 709	X	1
46-337	LG 713	X	1
46-338	LG 704	X	1
46-339	LG 710	X	1
46-340	LG 711	X	1
46-341	LG 711	X	1
46-342	LG 713	X	1
46-416	LG 718	X	1
47-014	LG 743	X	10
47-020	LG 743	X	1
47-038	LG 743	X	10
47-050	LG 744	X	1
47-051	LG 744	X	1
47-080	LG 744	X	1
47-081	LG 744	X	1
47-120	LG 744	X	1
47-121	LG 744	X	1
47-160	LG 744	X	1
47-161	LG 744	X	1
47-200	LG 744	X	1
47-201	LG 744	X	1
47-689	LG 743	X	1
48-001	LG 914	X	1
48-006	LG 694	X	1
48-007	LG 1039	X	1
48-009	LG 697	X	1
48-011	SFS 105	X	1
48-043		X	1
48-048	LG 725	X	1
48-049	LG 725	X	1
48-051	LG 725	X	1
48-080		X	1
48-135	LG 694	X	1
48-141	LG 249	X	1
48-145	LG 698	X	1
48-148	LG 695	X	1
48-200	LG 694	X	1
48-202	LG 694	X	1
48-205	LG 694	X	1
48-206	LG 246	X	10
48-211	LG 233	X	1
48-232	LG 724	X	1
48-233	LG 724	X	1
48-235	LG 886	X	1
48-236	LG 724	X	1
48-237	LG 695	X	1

OREGON	Page	Code	Pk.
48-320	LG 238	X	1
49-001	LG 622	X	10
49-002	LG 623	X	1
49-003	LG 622	X	10
49-004	LG 622	X	10
49-005	LG 622	X	1
49-006	LG 622	X	1
49-007	LG 622	X	1
49-008	LG 623	X	1
49-009	LG 625	X	1
49-010	SFS 92	X	12
49-014	LG 759	X	1
49-015	SFS 92	X	12
49-016	LG 759	X	10
49-017	LG 760	X	10
49-018	LG 728	X	1
49-019	LG 609	X	1
49-020	LG 631	X	1
49-021	LG 629	X	10
49-023	LG 629	X	1
49-025	LG 629	X	1
49-026	LG 769	X	1
49-027	LG 769	X	1
49-028	LG 769	X	10
49-029	LG 609	X	1
49-031	LG 746	X	10
49-033	LG 628	X	1
49-034	LG 630	X	1
49-035	LG 629	X	1
49-036	LG 628	X	1
49-037	LG 622	X	1
49-038	LG 628	X	1
49-039	LG 629	X	1
49-040-0	LG 749	X	10
49-041-0	LG 749	X	10
49-045	LG 749	X	10
49-047	LG 749	X	10
49-050	LG 954	X	1
49-051	LG 954	X	1
49-054	LG 632	X	1
49-058	LG 768	X	1
49-067	LG 748	X	10
49-069	LG 746	X	10
49-070	LG 604	X	1
49-071	LG 602	X	1
49-077	LG 628	X	1
49-078	LG 603	X	1
49-079	LG 768	X	1
49-083	LG 913	X	1
49-084	LG 759	X	10
49-085	LG 769	X	10
49-088-0	LG 631	X	1
49-095	LG 746	X	10
49-099	LG 748	X	10
49-100	LG 749	X	10
49-101	LG 602	X	1
49-102	LG 602	X	1
49-107	LG 749	X	10
49-109	LG 748	X	10
49-110	LG 746	X	10
49-111	LG 748	X	10
49-112	LG 749	X	10
49-114	LG 746	X	10
49-115	LG 746	X	10
49-119	LG 746	X	10
49-120	LG 759	X	10
49-123	LG 746	X	10
49-127	LG 746	X	10
49-128	LG 747	X	1
49-129	LG 745	X	10
49-131	LG 745	X	10

N = New Item
F = NLA after inventories are sold

D = Discontinued after 2019 catalog
X = Active part number

2019 Numerical Index

OREGON	Page	Code	Pk.
49-132	LG 749	X	10
49-133	LG 609	X	1
49-143	LG 752	X	10
49-145	LG 603	X	1
49-146	LG 603	X	1
49-147	LG 603	X	1
49-148	LG 603	X	1
49-149	LG 604	X	1
49-150	LG 758	X	10
49-152	LG 758	X	10
49-153	LG 758	X	10
49-156	LG 759	X	10
49-157	LG 759	X	10
49-160	LG 747	X	10
49-161	LG 747	X	1
49-170	LG 758	X	10
49-181	LG 752	X	1
49-182	LG 752	X	1
49-183	LG 752	X	1
49-184	LG 752	X	1
49-185	LG 752	X	1
49-186	LG 751	X	1
49-187	LG 752	X	1
49-189	LG 752	X	1
49-190	LG 752	X	1
49-191	LG 752	X	1
49-192	LG 752	X	1
49-193	LG 756	X	1
49-194	LG 755	X	1
49-196	LG 756	X	1
49-201	LG 608	X	1
49-204	LG 749	X	1
49-206	LG 755	X	10
49-207	LG 756	X	1
49-208	LG 756	X	1
49-209	LG 625	X	1
49-210	LG 628	X	1
49-213	LG 623	X	10
49-214	LG 624	X	1
49-216	LG 602	X	1
49-218	LG 628	X	1
49-219	LG 625	X	1
49-220	LG 603	X	1
49-221	LG 604	X	1
49-222	LG 604	X	1
49-223	LG 604	X	1
49-224	LG 623	X	1
49-225	LG 604	X	1
49-226	LG 596	X	1
49-227	LG 596	X	1
49-228	LG 596	X	1
49-229	LG 609	X	1
49-230	LG 609	X	1
49-231	LG 630	X	1
49-233	LG 601	X	1
49-234	LG 601	X	1
49-235	LG 625	X	1
49-236	LG 601	X	1
49-237	LG 626	X	1
49-238	LG 626	X	1
49-239	LG 609	X	1
49-240	LG 626	X	1
49-241	LG 626	X	1
49-242	LG 624	X	1
49-243	LG 624	X	1
49-244	LG 629	X	1
49-246	LG 627	X	1
49-262	LG 621	X	10
49-270	LG 619	X	1
49-271	LG 614	X	1
49-272	LG 614	X	1

OREGON	Page	Code	Pk.
49-273	LG 620	X	1
49-274	LG 614	X	1
49-275	LG 620	X	1
49-276	LG 620	X	1
49-277	LG 620	X	1
49-281	LG 613	X	1
49-282	LG 619	X	1
49-283	LG 616	X	1
49-284	LG 617	X	1
49-285	LG 617	X	1
49-286	LG 615	X	1
49-287	LG 620	X	1
49-288	LG 619	X	1
49-300	LG 626	X	1
49-301	LG 606	X	1
49-304	LG 603	X	1
49-305	LG 603	X	1
49-307	LG 625	X	1
49-308	LG 625	X	1
49-312	LG 605	X	1
49-313	LG 620	X	1
49-314	LG 910	X	1
49-315	LG 627	X	10
49-316	LG 613	X	1
49-317	LG 613	X	1
49-318	LG 621	X	1
49-319	LG 620	X	1
49-320	LG 621	X	1
49-322	LG 620	X	1
49-323	LG 621	X	1
49-324	LG 752	X	1
49-325	LG 605	X	1
49-326	LG 768	X	1
49-327	LG 606	X	1
49-328	LG 606	X	1
49-329	LG 604	X	1
49-331	LG 604	X	1
49-333	LG 910	X	1
49-355	LG 746	X	10
49-359	LG 628	X	1
49-360	LG 628	X	1
49-361	LG 628	X	1
49-362	LG 624	X	1
49-363	LG 624	X	1
49-401	LG 605	X	1
49-402	LG 758	X	10
49-403	LG 758	X	10
49-411	LG 759	X	1
49-412	LG 745	X	1
49-413	LG 749	X	1
49-420	LG 606	X	1
49-421	LG 607	X	1
49-422	LG 607	X	1
49-426	LG 607	X	1
49-427	LG 607	X	1
49-428	LG 607	X	1
49-429	LG 607	X	1
49-430	LG 607	X	1
49-432	LG 607	X	1
49-433	LG 608	X	1
49-435	LG 608	X	1
49-436	LG 608	X	1
49-437	LG 614	X	1
49-438	LG 615	X	1
49-439	LG 614	X	1
49-440	LG 618	X	1
49-441	LG 618	X	1
49-442	LG 619	X	1
49-443	LG 630	X	1
49-444	LG 630	X	1
49-603	LG 757	N	1

OREGON	Page	Code	Pk.
49-604	LG 757	N	1
49-605	LG 757	N	1
49-606	LG 622	N	1
49-607	LG 757	N	1
49-608	LG 627	N	1
49-609	LG 630	N	1
49-610	LG 632	N	1
49-611	LG 630	N	1
49-612	LG 631	N	1
49-667	LG 750	X	10
49-693	LG 602	X	1
49-700	LG 605	X	1
49-800	LG 610	X	1
49-801	LG 610	X	1
49-802	LG 610	X	1
49-803	LG 610	X	1
49-804	LG 610	X	1
49-805	LG 609	X	1
49-806	LG 611	X	1
49-807	LG 611	X	1
49-809	LG 613	X	1
49-810	LG 612	X	1
49-812	LG 612	X	1
49-813-1	LG 610	X	1
49-814	LG 614	X	1
49-815	LG 626	X	1
49-816	LG 612	X	1
49-817-0	LG 616	X	1
49-818-0	LG 615	X	1
49-819-0	LG 615	X	1
49-822-0	LG 616	X	1
49-823-0	LG 618	X	1
49-825	LG 606	X	1
49-826	LG 606	X	1
49-827	LG 608	X	1
49-828	LG 608	X	1
49-829	LG 605	X	1
49-831	LG 612	X	1
49-832	LG 611	X	1
49-833	LG 611	X	1
49-834	LG 611	X	1
49-835	LG 611	X	1
49-836-0	LG 616	X	1
49-837-0	LG 615	X	1
49-839	LG 613	X	1
49-840	LG 609	X	1
49-841	LG 626	X	10
49-843	LG 612	X	1
49-844	LG 612	X	1
49-845	LG 611	X	1
49-846	LG 608	X	1
49-847	LG 610	X	1
49-848	LG 613	X	1
49-849	LG 610	X	1
49-852	LG 611	X	1
49-853	LG 611	X	1
49-854	LG 615	X	1
49-855	LG 617	X	1
49-856	LG 619	X	1
49-857	LG 619	X	1
49-859	LG 616	X	1
49-860	LG 616	X	1
49-861	LG 615	X	1
49-863	LG 616	X	1
49-864	LG 616	X	1
49-865	LG 616	X	1
49-866	LG 617	X	1
49-867	LG 618	X	1
49-868	LG 602	X	1
49-872	LG 612	X	1
49-873	LG 612	X	1

N = New Item
F = NLA after inventories are sold

D = Discontinued after 2019 catalog
X = Active part number

2019 Numerical Index

OREGON	Page	Code	Pk.
49-875	LG 612	X	1
49-877	LG 613	X	1
49-879	LG 618	X	1
49-880	LG 617	X	1
49-881	LG 618	X	1
49-882-0	LG 613	X	1
49-883	LG 618	X	1
49-884	LG 619	X	1
49-885-0	LG 619	X	1
49-887-0	LG 616	X	1
49-888-0	LG 617	X	1
49-891-0	LG 617	X	1
49-893	LG 617	X	1
49-894	LG 619	X	1
49-897	LG 617	X	1
49-898	LG 618	X	1
49-899	LG 617	X	1
49-901	LG 615	X	1
49-902	LG 614	X	1
49-903	LG 615	X	1
49-904	LG 614	X	1
49-906	LG 615	X	1
49-908	LG 614	X	1
49-911	LG 624	X	1
49-912	LG 624	X	1
49-913	LG 624	X	1
49-914	LG 165	X	1
49-915	LG 597	X	1
49-916	LG 629	X	1
49-917	LG 623	N	10
49-918	LG 623	N	10
49-919	LG 623	N	10
49-920	LG 623	N	10
49-921	LG 618	N	1
49-922	LG 623	N	10
49-923	LG 620	N	1
49-924	LG 619	N	1
49-978	LG 609	X	1
49-985	LG 625	X	1
49-986	LG 627	X	1
49-989	LG 602	X	1
49-991	LG 602	X	1
49-992	LG 624	X	1
49-993	LG 624	X	1
49-994	LG 625	X	1
49-995	LG 625	X	1
49-996	LG 629	X	1
49-997	LG 628	X	1
49-998	LG 626	X	1
49-999	LG 626	X	1
491-530	LG 416	X	10
492-726	LG 436	X	6
492-730	LG 440	X	6
492-731	LG 436	X	6
492-732	LG 442	X	6
496-399	LG 416	X	6
49981		X	6
50-025-0	LG 747	X	1
50-027	LG 747	X	1
50-032	LG 759	X	1
50-033	LG 759	X	1
50-034	LG 598	N	1
50-041	LG 757	X	1
50-043	LG 757	X	1
50-101	LG 746	X	10
50-204	LG 758	X	10
50-206	LG 758	X	10
50-302	LG 758	X	1
50-407	LG 758	X	1
50-408	LG 745	X	1
50-409	LG 745	X	1

OREGON	Page	Code	Pk.
50-410	LG 745	X	1
50-411	LG 745	X	1
50-412	LG 745	X	1
50-414	LG 751	X	1
50-415	LG 751	X	1
50-416	LG 751	X	1
50-417	LG 751	X	1
50-418	LG 751	X	1
50-419	LG 751	X	1
50-420	LG 751	X	10
50-421	LG 751	X	10
50-422	LG 751	X	10
50-423	LG 753	X	1
50-425	LG 753	X	1
50-426	LG 753	X	1
50-428	LG 752	X	1
50-431	LG 753	X	1
50-432	LG 753	X	1
50-433	LG 753	X	1
50-435	LG 747	X	1
50-437	LG 745	X	1
50-438	LG 747	X	1
50-441	LG 748	X	1
50-445	LG 748	X	1
50-446		X	1
50-448	LG 748	X	1
50-450	LG 753	X	1
50-452	LG 753	X	1
50-453	LG 756	X	1
50-454	LG 756	X	1
50-455	LG 753	X	1
50-502	LG 756	X	10
50-541	LG 747	X	1
50-542	LG 747	X	1
50-543	LG 748	X	1
50-544	LG 747	X	1
50-545	LG 748	X	1
50-546	LG 748	X	1
50-548	LG 759	X	1
50-553	LG 752	X	1
50-554	LG 753	X	1
50-555	LG 753	X	1
50-556	LG 753	X	1
50-603	LG 595	X	1
50-607	LG 595	X	1
50-619	LG 595	X	1
50-620	LG 595	X	1
50-621	LG 595	X	1
50-634	LG 597	X	1
50-635	LG 596	X	1
50-636	LG 596	X	1
50-637	LG 597	X	1
50-638	LG 596	X	1
50-640	LG 598	X	1
50-641	LG 598	X	1
50-642	LG 598	X	1
50-646	LG 598	X	1
50-647	LG 598	X	1
50-649	LG 598	X	1
50-650	LG 599	X	1
50-651	LG 599	X	1
50-652	LG 599	X	1
50-653	LG 599	X	1
50-654	LG 599	X	1
50-655	LG 600	X	1
50-656	LG 600	X	1
50-657	LG 596	X	1
50-658	LG 596	X	1
50-659	LG 600	X	1
50-661	LG 600	X	1
50-662	LG 600	X	1

OREGON	Page	Code	Pk.
50-663	LG 600	X	1
50-664	LG 600	X	1
50-665	LG 601	X	1
50-666	LG 601	X	1
50-667	LG 600	X	1
50-668	LG 597	X	1
50-669	LG 597	X	1
50-670	LG 597	X	1
50-673	LG 597	X	1
50-674	LG 597	X	1
51-000	LG 727	X	1
51-001-0	LG 727	X	1
51-011	LG 727	X	1
51-013	LG 725	X	1
51-014	LG 941	X	1
51-222	LG 727	X	1
51-223	LG 726	X	1
51-224	LG 726	X	1
51-225	LG 725	X	1
514316		D	1
514363	SFS 63	X	6
514364	SFS 63	X	6
514366	LG 700	X	1
514371	LG 721	X	1
515952		X	1
518769	LG 911	X	1
518771	LG 911	X	1
53-001	LG 623	X	10
53-005	LG 632	X	10
53-006	LG 632	X	10
54-001	SFS 82	X	48
54-002	SFS 82	X	48
54-005	SFS 82	X	12
54-006	SFS 82	X	1
54-007	SFS 82	X	1
54-021	SFS 92	X	1
54-026	SFS 84	X	12
54-059	SFS 84	X	4
54-063	SFS 84	X	1
55-001	SFS 63	X	1
55-002-1	LG 993	X	10
55-008	LG 771	X	1
55-017	LG 772	X	1
55-018	LG 771	X	1
55-053		D	1
55-069-0	LG 993	X	10
55-079	LG 214	X	1
55-092	LG 768	X	1
55-097	LG 772	X	1
55-102	LG 773	X	1
55-106	LG 773	X	1
55-109	LG 773	X	1
55-110	LG 765	X	1
55-111	LG 1026	X	1
55-112	LG 778	X	1
55-115	LG 932	X	1
55-116	LG 1018	X	1
55-118	LG 630	X	1
55-119	LG 764	X	1
55-120	LG 770	X	1
55-121	LG 1024	X	1
55-122	LG 770	X	1
55-123	LG 770	X	1
55-124	LG 771	X	1
55-125	LG 771	X	1
55-126	LG 771	X	1
55-127	LG 772	X	1
55-132	LG 773	X	1
55-136-1	LG 990	X	1
55-137-1	LG 990	X	1
55-138	LG 768	X	1

N = New Item
F = NLA after inventories are sold

D = Discontinued after 2019 catalog
X = Active part number

2019 Numerical Index

OREGON	Page	Code	Pk.
55-139	LG 763	X	1
55-140-0	LG 989	X	1
55-142-1	LG 990	X	1
55-145-1	LG 989	X	1
55-147-1		X	1
55-150-1	LG 989	X	10
55-156-1	LG 993	X	1
55-157	LG 763	X	1
55-158	LG 934	X	1
55-159	LG 989	X	1
55-164	LG 1020	X	1
55-166		D	1
55-168	LG 933	X	1
55-179	LG 1023	X	1
55-182	LG 1023	X	1
55-184	LG 1019	X	1
55-185	LG 1027	X	1
55-186	LG 1027	X	1
55-187	LG 631	X	1
55-188	LG 631	X	1
55-189	LG 631	X	1
55-191	LG 996	X	12
55-192		D	1
55-193		D	1
55-194	LG 996	X	6
55-201	LG 190	X	1
55-206	LG 209	X	1
55-207	LG 191	X	1
55-211	LG 191	X	1
55-212	LG 209	X	1
55-214	LG 209	X	1
55-218	LG 209	X	1
55-226	LG 212	X	1
55-227	LG 191	X	1
55-231	LG 212	X	1
55-236	LG 213	X	1
55-240	LG 214	X	1
55-241	LG 214	X	1
55-242	LG 214	X	1
55-243	LG 215	X	1
55-244	LG 215	X	1
55-245	LG 215	X	1
55-246	LG 214	X	1
55-247	LG 214	X	1
55-248	LG 215	X	1
55-249	LG 215	X	1
55-252	LG 1019	X	1
55-253	LG 1024	X	1
55-255	LG 1019	X	1
55-256	LG 1019	X	1
55-262	LG 215	X	1
55-263	LG 214	X	1
55-265	LG 986	X	6
55-281	LG 1027	X	1
55-284	LG 992	X	1
55-285	LG 1027	X	1
55-286	LG 992	X	1
55-287	LG 986	X	10
55-288	LG 986	X	10
55-289	LG 986	X	10
55-294	LG 986	X	6
55-295	LG 986	X	1
55-296	LG 986	X	1
55-297	LG 986	X	1
55-298	LG 986	X	1
55-299	LG 986	X	1
55-302-1	LG 992	X	1
55-304-1	LG 992	X	1
55-305-1	LG 992	X	1
55-326	LG 1021	X	1
55-328	LG 992	X	1

OREGON	Page	Code	Pk.
55-332	LG 633	X	10
55-333	LG 633	X	10
55-334	LG 633	X	10
55-336	LG 986	X	10
55-337	LG 986	X	10
55-338	LG 986	X	10
55-339	LG 986	X	10
55-340	LG 627	X	10
55-342	LG 627	X	10
55-343	LG 627	X	10
55-344	LG 986	X	10
55-345	LG 986	X	10
55-347	LG 986	X	1
55-348	LG 986	X	1
55-349	LG 986	X	1
55-352	LG 986	X	1
55-355-1	LG 994	X	1
55-356-0	LG 994	X	1
55-357-1	LG 994	X	1
55-403	LG 995	X	22
55-406-0	LG 995	X	1
55-417	LG 995	X	10
55-460-1	LG 1026	X	10
55-485	LG 995	X	1
55-488	LG 995	X	1
55-491	LG 996	X	6
55-492	LG 996	X	4
55-493		X	4
55-510	LG 212	X	1
55-515	LG 211	X	1
55-516	LG 985	X	10
55-517	LG 985	X	10
55-518	LG 985	X	1
55-519	LG 985	X	1
55-520	LG 985	X	1
55-521	LG 985	X	10
55-522	LG 985	X	1
55-523	LG 985	X	1
55-524	LG 985	X	1
55-545	LG 992	X	10
55-546		D	10
55-549	LG 992	X	1
55-550	LG 992	X	1
55-551	LG 992	X	1
55-553	LG 991	X	10
55-554		D	1
55-555	LG 991	X	1
55-556	LG 991	X	10
55-557		D	1
55-558	LG 991	X	10
55-559	LG 991	X	1
55-560	LG 991	X	1
55-561		D	1
55-562	LG 991	X	10
55-563	LG 991	X	1
55-564		D	1
55-610	LG 191	X	1
55-611	LG 192	X	1
55-612	LG 211	X	1
55-613	LG 211	X	1
55-741	LG 1019	X	1
55-743	LG 988	X	1
55-800	LG 934	X	1
55-803	LG 1022	X	1
55-804-1	LG 994	X	1
55-807	LG 994	X	1
55-808-1	LG 994	X	1
55-809-1	LG 994	X	1
55-811	LG 933	X	1
55-812	LG 1022	X	1
55-813	LG 933	X	1

OREGON	Page	Code	Pk.
55-816	LG 988	X	1
55-820	LG 935	X	1
55-821	LG 988	X	1
55-822	LG 1027	X	1
55-903		D	1
55-970		D	1
55-971	LG 988	X	1
55-972	LG 988	X	10
55-973	LG 988	X	1
55-974	LG 989	X	1
55-977		D	1
55-978		D	1
55-979		D	1
55-983	LG 992	X	6
55-984	LG 991	X	6
55-985	LG 991	X	6
55-986	LG 991	X	6
55-987		D	1
55-988		D	1
55-989	LG 985	X	1
55-990	LG 985	X	1
55-993	LG 988	X	1
55-994	LG 988	X	1
55-995		D	1
55-996	LG 988	X	1
559046	LG 978	X	16
559047	LG 978	X	16
559050	LG 978	X	8
559051	LG 978	X	8
559213		X	1
56-001	LG 687	X	1
56-002	LG 687	X	1
56-003	LG 687	X	1
56-004	LG 686	X	1
56-008	LG 687	X	1
56-011	LG 687	X	1
56-018	LG 690	X	1
56-019	LG 772	X	1
56-022	LG 686	X	1
56-023	LG 687	X	1
56-024	LG 687	X	1
56-025	LG 687	X	1
56-030	LG 693	X	1
57-001	LG 677	X	1
57-002	LG 677	X	1
57-003	LG 677	X	1
57-005	LG 677	X	1
57-006	LG 677	X	1
57-008	LG 677	X	1
57-010	LG 677	X	1
57-014	LG 677	X	1
57-016	LG 677	X	1
57-017	LG 677	X	1
57-019	LG 677	X	1
57-039		X	1
57-050	LG 1024	X	1
572015	LG 912	X	1
572017	LG 911	X	1
572018	LG 911	X	1
572030	LG 911	X	1
572031	LG 911	X	1
572037	LG 911	X	1
572049	LG 911	X	1
575377	SFS 58	X	1
575378	SFS 58	X	1
58-001	LG 961	X	1
58-011	LG 957	X	1
58-012	LG 957	X	1
58-013	LG 957	X	1
58-020	LG 957	X	1
58-021	LG 957	X	1

N = New Item
F = NLA after inventories are sold

D = Discontinued after 2019 catalog
X = Active part number

2019 Numerical Index

OREGON	Page	Code	Pk.
58-022	LG 957	X	1
58-023	LG 957	X	1
58-024	LG 957	X	1
58-040	LG 961	X	1
58-041	LG 961	X	1
58-043	LG 961	X	1
58-050	LG 958	X	1
58-061	LG 959	X	1
58-063	LG 959	X	1
58-064	LG 959	X	1
58-065	LG 959	X	1
58-066	LG 959	X	1
58-067	LG 959	X	1
58-068	LG 959	X	1
58-069	LG 959	X	1
58-071	LG 959	X	1
58-072	LG 959	X	1
58-074	LG 959	X	1
58-075	LG 959	X	1
58-076	LG 959	X	1
58-077	LG 959	X	1
58-078	LG 959	X	1
58-079	LG 959	X	1
58-087	LG 959	X	1
58-088	LG 959	X	1
58-110	LG 960	X	1
58-112	LG 960	X	1
58-114	LG 960	X	1
58-117	LG 960	X	1
58-119	LG 960	X	1
58-131	LG 960	X	1
58-132	LG 960	X	1
58-133	LG 960	X	1
58-135	LG 960	X	1
58-150	LG 960	X	1
58-160	LG 963	X	1
58-242	LG 958	X	1
58-300	LG 963	X	1
58-302	LG 959	X	1
58-329	LG 960	X	1
58-332	LG 959	X	1
58-356	LG 958	X	1
58-358	LG 958	X	1
58-360	LG 958	X	1
58-361	LG 958	X	1
58-362	LG 958	X	1
58-375	LG 958	X	1
58-397	LG 958	X	1
58-398	LG 959	X	1
58-399	LG 960	X	1
584996		X	1
59-200	LG 783	X	1
59-201	LG 783	X	1
59-202	LG 783	X	1
59-203	LG 783	X	1
590-669	LG 420	X	6
590-685	LG 540	X	6
590-698	LG 510	X	6
591-259	LG 438	X	6
591-585	LG 493	X	6
591-594	LG 482	X	6
591-611	LG 527	X	6
591-635	LG 411	X	6
591-938	LG 407	X	6
592-015	LG 515	X	6
592-033	LG 443	X	6
592-124	LG 497	X	6
592-137	LG 396	X	6
592-160	LG 419	X	6
592-608	LG 434	X	6
592-615	LG 491	X	6

OREGON	Page	Code	Pk.
592-616	LG 485	X	6
592-617	LG 487	X	6
593-600	LG 385	X	6
593-601	LG 386	X	6
594-078	LG 564	X	6
594-085	LG 564	X	6
594-601	LG 434	X	6
595-024	LG 465	X	6
595-077	LG 461	X	6
595-085	LG 462	X	6
595-087	LG 417	X	6
595-088	LG 458	X	6
595-601	LG 400	X	6
595-602	LG 403	X	6
595-605	LG 422	X	6
595-609	LG 461	X	6
595-613	LG 463	X	6
595-614	LG 459	X	6
595-621	LG 467	X	6
595-622	LG 468	X	6
595-623	LG 466	X	6
595-807	LG 382	X	6
595420		X	1
596-300	LG 519	X	6
596-303	LG 416	X	6
596-306	LG 487	X	6
596-308	LG 548	X	6
596-309	LG 489	X	6
596-310	LG 447	X	6
596-319	LG 415	X	6
596-321	LG 562	X	6
596-322	LG 438	X	6
596-323	LG 453	X	6
596-327	LG 434	X	6
596-329	LG 578	X	6
596-330	LG 406	X	6
596-332	LG 484	X	6
596-333	LG 408	X	6
596-341	LG 482	X	6
596-344	LG 495	X	6
596-346	LG 393	X	6
596-347	LG 448	X	6
596-351	LG 408	X	6
596-354	LG 484	X	6
596-362	LG 441	X	6
596-370	LG 427	X	6
596-373	LG 512	X	6
596-387	LG 407	X	6
596-601	LG 474	X	6
596-615	LG 529	X	6
596-627	LG 502	X	6
596-628	LG 528	X	6
596-629	LG 393	X	6
596-702	LG 388	X	6
596-704	LG 471	X	6
596-717	LG 501	X	6
596-719	LG 488	X	6
596-722	LG 492	X	6
596-730	LG 490	X	6
596-734	LG 489	X	6
596-743	LG 493	X	6
596-749	LG 433	X	6
596-752	LG 415	X	6
596-769	LG 488	X	6
596-771	LG 492	X	6
596-775	LG 493	X	6
596-787	LG 500	X	6
596-808	LG 472	X	6
596-810	LG 499	X	6
596-812	LG 498	X	6
596-815	LG 578	X	6

OREGON	Page	Code	Pk.
596-816	LG 451	X	6
596-817	LG 371	X	6
596-818	LG 453	X	6
596-900	LG 380	X	6
597-601	LG 527	X	6
597-602	LG 524	X	6
597-606	LG 522	X	6
598-064	LG 514	X	6
598-600	LG 519	X	6
598-628	LG 517	X	6
598-629	LG 575	X	6
598-631	LG 390	X	6
598-640	LG 405	X	6
598-672	LG 515	X	6
599-132	LG 522	X	6
599-133	LG 422	X	6
60-000	LG 702	X	1
60-001	LG 708	X	1
60-002	LG 710	X	1
60-003	LG 710	X	1
60-004	LG 701	X	1
60-005	LG 704	X	1
60-006	LG 716	X	1
60-007	LG 704	X	1
60-008	LG 703	X	1
60-009	LG 709	X	1
60-012-0	LG 712	X	1
60-014	LG 712	X	1
60-015	LG 716	X	1
60-016	LG 710	X	1
60-021	LG 706	X	1
60-025-0	LG 716	X	1
60-026-0	LG 716	X	1
60-027	LG 718	X	1
60-028	LG 718	X	1
60-030-0	LG 716	X	1
60-031-0	LG 716	X	1
60-032-0	LG 716	X	1
60-033-0	LG 716	X	1
60-036	LG 701	X	1
60-039	LG 706	X	1
60-041	LG 711	X	1
60-042	LG 712	X	1
60-043	LG 716	X	1
60-045	LG 707	X	1
60-046	LG 700	X	1
60-048	LG 722	X	1
60-053	LG 708	X	1
60-054	LG 708	X	1
60-056	LG 706	X	1
60-057	LG 706	X	1
60-059	LG 706	X	1
60-060	LG 722	X	1
60-061	LG 718	X	1
60-062	LG 706	X	1
60-065	LG 722	X	1
60-079	LG 709	X	1
60-092	LG 722	X	1
60-100	LG 721	X	1
60-101	LG 702	X	1
60-102	LG 702	X	1
60-103	LG 702	X	1
60-104	LG 702	X	1
60-105	LG 702	X	1
60-106	LG 701	X	1
60-107	LG 703	X	1
60-108	LG 703	X	1
60-109	LG 703	X	1
60-110	LG 703	X	1
60-122	LG 721	X	1
60-123	LG 717	X	1

N = New Item
F = NLA after inventories are sold

D = Discontinued after 2019 catalog
X = Active part number

OREGON	Page	Code	Pk.
60-124	LG 710	X	1
60-125	LG 718	X	1
60-137	LG 705	X	1
60-140	LG 715	X	1
60-160	LG 701	X	1
60-184	LG 720	X	1
60-188	LG 718	X	1
60-201	LG 718	X	1
60-209	LG 700	X	1
60-210	LG 700	X	1
60-220	LG 708	X	1
60-226	LG 700	X	1
60-240	LG 719	X	1
60-353	LG 719	X	1
60-365	LG 700	X	1
60-380	LG 717	X	1
60-400	LG 700	X	1
60-408	LG 700	X	1
60-409	LG 700	X	1
60-410	LG 703	X	1
60-420	LG 717	X	1
60-426	LG 699	X	1
60-427	LG 717	X	1
60-428	LG 720	X	1
60-522	LG 715	X	1
60-525	LG 702	X	1
60-526	LG 702	X	1
60-527	LG 714	X	1
60-528	LG 708	X	1
60-529	LG 720	X	1
60-530	LG 720	X	1
60-531	LG 720	X	1
60-687	LG 720	X	1
60-786	LG 719	X	1
60-860	LG 701	X	1
60-991	LG 718	X	1
605531	LG 912	N	1
605532	LG 912	N	1
605533	LG 911	N	1
605534	LG 912	N	1
605535	LG 912	N	1
65-002	LG 340	X	1
65-006	LG 340	X	1
65-007	LG 342	X	1
65-008	LG 340	X	1
65-009	LG 341	X	1
65-204	LG 342	X	1
65-206	LG 342	X	1
65-208	LG 342	X	1
65-220	LG 340	X	1
65-221	LG 341	X	1
65-222	LG 341	X	1
65-224	LG 341	X	1
65-225	LG 341	X	1
65-226	LG 341	X	1
65-228	LG 341	X	1
65-229	LG 342	X	1
65-230	LG 342	X	1
66-200	LG 962	X	1
66-202	LG 962	X	1
66-203	LG 962	X	1
66-205	LG 962	X	1
66-206	LG 962	X	1
66-207	LG 962	X	1
66-208	LG 962	X	1
66-209	LG 962	X	1
67-001	LG 965	X	1
67-002	LG 965	X	1
67-003	LG 965	X	1
67-004	LG 965	X	1
67-005	LG 965	X	1

OREGON	Page	Code	Pk.
67-007	LG 965	X	1
67-008	LG 965	X	1
67-009	LG 965	X	1
67-010	LG 965	X	1
67-011	LG 965	X	1
67-012	LG 965	X	1
67-013	LG 965	X	1
67-014	LG 965	X	1
67-015	LG 965	X	1
67-017	LG 965	X	1
67-018	LG 965	X	1
67-019	LG 965	X	1
67-020	LG 965	X	1
67-021	LG 965	X	1
67-022	LG 965	X	1
67-024	LG 965	X	1
67-026	LG 965	X	1
67-109-0	SFS 69	X	1
67-110	SFS 68	X	1
67-111	SFS 68	X	1
67-112	SFS 68	X	1
67-113	SFS 68	X	1
67-214	SFS 69	X	1
67-215	SFS 69	X	1
67-216	SFS 69	X	1
67-217	SFS 69	X	1
67-221	SFS 70	X	1
67-222		X	1
67-224	SFS 70	X	1
67-225	SFS 70	X	1
67-226	SFS 70	X	1
68-204	LG 962	X	1
68-210	LG 962	X	1
68-211	LG 962	X	1
68-213	LG 962	X	1
68-214	LG 962	X	1
68-373	LG 962	X	1
68-374	LG 962	X	1
69-001	LG 982	N	
69-004	LG 982	N	
69-005	LG 982	N	
69-007	LG 193	X	1
69-008	LG 982	N	
69-010	LG 982	N	
69-012	LG 982	N	
69-013		N	
69-014		N	
69-023	LG 192	X	1
69-030	LG 193	X	1
69-031	LG 199	X	1
69-032	LG 198	X	1
69-034	LG 217	X	1
69-036	LG 181	X	1
69-046	LG 979	X	10
69-170	LG 981	X	16
69-171	LG 981	X	16
69-172	LG 981	X	10
69-173	LG 981	X	16
69-174	LG 981	X	16
69-175	LG 981	X	16
69-176	LG 981	X	10
69-177	LG 981	X	18
69-190	LG 980	X	10
69-191	LG 980	X	10
69-194	LG 980	X	18
69-195	LG 980	X	16
69-196	LG 980	X	10
69-197	LG 980	X	18
69-200	LG 979	X	16
69-201	LG 979	X	10
69-202	LG 979	X	10

OREGON	Page	Code	Pk.
69-239-0		X	6
69-241-0		X	6
69-242-0		X	6
69-243-0		X	6
69-244-0		X	6
69-245-0		X	6
69-246-0		X	6
69-247-0		X	6
69-248-0		X	6
69-249-0		X	6
69-250-0		X	6
69-251-0		X	6
69-252-0		X	6
69-253-0		X	6
69-254-0		X	6
69-255-0		X	6
69-256-0		X	6
69-257-0		X	6
69-258-0		X	6
69-259-0		X	6
69-260-0		X	6
69-261-0		X	6
69-262-0		X	6
69-263-0		X	6
69-264-0		X	6
69-265-0		X	6
69-266-0		X	6
69-267-0		X	6
69-281	LG 814	X	12
69-282	LG 817	X	12
69-322	LG 200	X	1
69-331	LG 218	X	1
69-347	LG 194	X	1
69-350		X	216
69-352		X	32
69-353		X	12
69-354		X	6
69-356		X	180
69-358		X	32
69-359		X	12
69-360		X	6
69-362		X	180
69-364	LG 982	X	32
69-365	LG 982	X	12
69-366	LG 982	X	6
69-368		X	160
69-370		X	32
69-371		X	12
69-372		X	6
69-374		X	90
69-376		X	32
69-377		X	12
69-378		X	6
69-380		X	135
69-382	LG 982	X	32
69-383	LG 982	X	12
69-384	LG 982	X	6
69-386		X	32
69-387		X	12
69-388		X	6
69-389		X	32
69-390		X	12
69-391		X	6
69-395	LG 206	X	1
69-400		X	300
69-402		X	32
69-403		X	12
69-404		X	6
69-406		X	135
69-408		X	32
69-409		X	12

N = New Item
F = NLA after inventories are sold

D = Discontinued after 2019 catalog
X = Active part number

2019 Numerical Index

OREGON	Page	Code	Pk.
69-410		X	6
69-412		X	135
69-414	LG 982	X	32
69-415	LG 982	X	12
69-416	LG 982	X	6
69-418		X	120
69-420		X	32
69-421		X	12
69-422		X	6
69-424		X	108
69-426		X	32
69-427		X	12
69-428		X	6
69-430		X	180
69-432		X	32
69-433		X	12
69-434		X	6
69-440		X	300
69-442		X	32
69-443		X	12
69-444		X	6
69-446		X	300
69-448		X	32
69-449		X	12
69-450		X	6
69-452		X	240
69-454		X	32
69-455		X	12
69-456		X	6
69-458		X	200
69-460		X	32
69-461		X	12
69-462		X	6
69-464		X	120
69-466		X	32
69-467		X	12
69-468		X	6
69-470		X	135
69-472	LG 982	X	32
69-473	LG 982	X	12
69-474	LG 982	X	6
69-476		X	80
69-478		X	32
69-479		X	12
69-480		X	6
69-483		X	32
69-484		X	12
69-485		X	6
69-486		X	32
69-487		X	12
69-488		X	6
69-507	LG 767	X	5
69-508	LG 775	X	5
69-509	LG 774	X	5
69-510	LG 775	X	5
69-511	LG 774	X	5
69-520		X	240
69-522		X	32
69-523		X	12
69-524		X	6
69-526		X	300
69-528		X	32
69-529		X	12
69-530		X	6
69-532		X	240
69-534		X	32
69-535		X	12
69-536		X	6
69-538		X	240
69-540		X	32
69-541		X	12
69-542		X	6
69-544		X	160
69-546		X	32
69-547		X	12
69-548		X	6
69-550		X	160
69-552		X	32
69-553		X	12
69-554		X	6
69-556		X	108
69-558		X	32
69-559		X	12
69-560		X	6
69-592	LG 982	N	
69-593	LG 982	N	
69-594	LG 982	N	
69-595	LG 982	N	
69-596	LG 982	N	
69-597	LG 982	N	
69-598	LG 982	N	
69-599	LG 982	N	
69-600	LG 982	X	6
69-601	LG 982	X	1
69-602	LG 982	X	1
69-603	LG 982	X	1
69-604	LG 982	X	1
69-605	LG 982	X	1
69-606	LG 982	X	1
69-607	LG 982	X	1
69-608	LG 982	X	1
69-609	LG 982	X	1
69-610	LG 982	X	1
69-611	LG 982	X	1
690-521-0	LG 368	X	3
690-617-0	LG 368	X	3
690-618-0	LG 368	X	3
70-142	LG 958	X	1
70-143	LG 958	X	1
70-144	LG 959	X	1
70-145	LG 959	X	1
70-146	LG 959	X	1
70-147	LG 960	X	1
70-148	LG 960	X	1
70-149	LG 960	X	1
70-150	LG 960	X	1
70-151	LG 960	X	1
70-152	LG 960	X	1
70-153	LG 960	X	1
70-154	LG 961	X	1
70-156	LG 961	X	1
70-157	LG 960	X	1
70-158	LG 964	X	1
70-159	LG 964	X	1
70-160	LG 964	X	1
70-161	LG 964	X	1
70-162	LG 964	X	1
70-163	LG 964	X	1
70-164	LG 964	X	1
70-165	LG 964	X	1
70-166	LG 964	X	1
70-301	LG 959	X	1
70-302	LG 959	X	1
70-306	LG 960	X	1
70-307	LG 960	X	1
70-308	LG 959	X	1
70-311	LG 960	X	1
70-312	LG 959	X	1
70-314	LG 959	X	1
70-315	LG 960	X	1
70-316	LG 959	X	1
70-317	LG 959	X	1
70-320	LG 959	X	1
70-321	LG 960	X	1
70-326	LG 959	X	1
70-328	LG 959	X	1
70-329	LG 960	X	1
70-330	LG 959	X	1
70-331	LG 959	X	1
70-332	LG 959	X	1
70-333	LG 963	X	1
70-334	LG 959	X	1
70-335	LG 959	X	1
70-338	LG 959	X	1
70-339	LG 959	X	1
70-340	LG 959	X	1
70-343	LG 958	X	1
70-344	LG 959	X	1
70-349	LG 959	X	1
70-351	LG 959	X	1
70-352	LG 959	X	1
70-353	LG 958	X	1
70-355	LG 959	X	1
70-356	LG 958	X	1
70-357	LG 958	X	1
70-358	LG 958	X	1
70-359	LG 958	X	1
70-361	LG 958	X	1
70-362	LG 958	X	1
70-363	LG 963	X	1
70-364	LG 961	X	1
70-365	LG 961	X	1
70-366	LG 961	X	1
70-367	LG 961	X	1
70-368	LG 961	X	1
70-369	LG 961	X	1
70-370	LG 961	X	1
70-371	LG 961	X	1
70-372	LG 961	X	1
70-373	LG 961	X	1
70-375	LG 958	X	1
70-376	LG 958	X	1
70-377	LG 960	X	1
70-378	LG 958	X	1
70-379	LG 963	X	1
70-380	LG 958	X	1
70-392	LG 961	X	1
70-393	LG 958	X	1
70-394	LG 958	X	1
70-396	LG 961	X	1
70-397	LG 958	X	1
70-398	LG 959	X	1
70-399	LG 960	X	1
70-403	LG 958	X	1
70-404	LG 958	X	1
70-405	LG 958	X	1
70-409	LG 960	X	1
70-410	LG 962	X	1
70-411	LG 962	X	1
70-412	LG 962	X	1
70-413	LG 962	X	1
70-414	LG 962	X	1
70-415	LG 962	X	1
70-416	LG 962	X	1
70-417	LG 962	X	1
70-418	LG 962	X	1
70-419	LG 962	X	1
70-420	LG 962	X	1
70-421	LG 962	X	1
70-422	LG 964	X	1
70-700	SFS 69	X	1
70-701	LG 964	X	1
70-703	SFS 69	X	1

N = New Item
F = NLA after inventories are sold

D = Discontinued after 2019 catalog
X = Active part number

OREGON	Page	Code	Pk.
70-706	LG 964	X	1
70-710	LG 964	X	1
70-721	SFS 69	X	1
71-001	LG 957	X	1
71-002	LG 957	X	1
71-003	LG 956	X	1
71-004	LG 956	X	1
71-096	LG 956	X	1
71-097	LG 956	X	1
71-098	LG 956	X	1
71-099	LG 956	X	1
71-100	LG 956	X	1
71-101	LG 956	X	1
71-102	LG 956	X	1
71-103	LG 956	X	1
71-104	LG 956	X	1
71-105	LG 957	X	1
71-106	LG 957	X	1
71-107	LG 957	X	1
71-108	LG 957	X	1
71-109	LG 956	X	1
71-110	LG 956	X	1
71-111	LG 957	X	1
71-250	LG 956	X	1
71-273	LG 957	X	1
71-274	LG 956	X	1
71-275	LG 956	X	1
71-276	LG 956	X	1
71-277	LG 956	X	1
71-278		X	1
71-280	LG 956	X	1
71-283	LG 957	X	1
71-322	LG 957	X	1
71-400	LG 956	X	1
71-401	LG 956	X	1
71-402	LG 956	X	1
71-403	LG 956	X	1
71-404		X	1
71-405	LG 956	X	1
71-406	LG 956	X	1
71-407	LG 956	X	1
71-408	LG 957	X	1
71-409	LG 956	X	1
71-410	LG 956	X	1
71-411	LG 956	X	1
71-412	LG 956	X	1
71-415	LG 956	X	1
71-417	LG 957	X	1
71-418	LG 957	X	1
71-424-0	LG 957	X	1
71-425-0	LG 957	X	1
71-500		X	1
71-511	LG 956	X	1
71-600	LG 956	X	1
71-602	LG 956	X	1
71-610	LG 956	X	1
71-800	LG 956	X	1
71-801	LG 956	X	1
71-816	LG 956	X	1
72-001	LG 1031	X	1
72-003	LG 1031	X	1
72-004	LG 1035	X	1
72-005	LG 1036	X	1
72-014	LG 1031	X	1
72-015	LG 1039	X	1
72-020	LG 1039	X	1
72-021	LG 1040	X	1
72-022	LG 1033	X	1
72-024	LG 1035	X	1
72-025	LG 1039	X	1
72-026	LG 1039	X	1

OREGON	Page	Code	Pk.
72-027	LG 1039	X	1
72-029	LG 1042	X	1
72-031	LG 1038	X	1
72-032	LG 1038	X	1
72-033	LG 1031	X	1
72-034	LG 1041	X	1
72-035	LG 1041	X	1
72-036	LG 1041	X	1
72-038	LG 1041	X	1
72-050	LG 1039	X	1
72-051	LG 1039	X	1
72-052	LG 1033	X	1
72-054	LG 1034	X	1
72-072	LG 1035	X	1
72-073	LG 1035	X	1
72-076	LG 1031	X	1
72-077	LG 1031	X	1
72-078		X	1
72-080	LG 241	N	1
72-094	LG 1042	X	1
72-098	LG 1040	X	1
72-099	LG 1040	X	1
72-100		X	1
72-106	LG 1029	X	1
72-107	LG 1029	X	1
72-108	LG 1031	X	1
72-109	LG 1037	X	1
72-110	LG 1030	X	1
72-112	LG 1034	X	1
72-113	LG 1035	X	1
72-114	LG 1035	X	1
72-115	LG 1033	X	1
72-117	LG 1036	X	1
72-119	LG 1040	X	1
72-129	LG 1041	X	1
72-131	LG 1041	X	1
72-133	LG 1040	X	1
72-134	LG 1040	X	1
72-135	LG 1040	X	1
72-136	LG 1032	X	1
72-137	LG 1032	X	1
72-138	LG 1032	X	1
72-139	LG 1032	X	1
72-161	LG 1038	X	1
72-162	LG 1038	X	1
72-163	LG 1040	X	1
72-164	LG 1040	X	1
72-165	LG 1041	X	1
72-166	LG 1037	X	1
72-167	LG 1037	X	1
72-168	LG 1037	X	1
72-169	LG 1033	X	1
72-170	LG 1033	X	1
72-172	LG 1033	X	1
72-301	LG 1037	X	1
72-304	LG 1038	X	1
72-306	LG 1038	X	1
72-307	LG 1038	X	1
72-308-1	LG 1042	X	1
72-309	LG 1042	X	1
72-311-1	LG 1039	X	1
72-312	LG 1038	X	1
72-313	LG 1038	X	1
72-316	LG 1042	X	1
72-318	LG 1042	X	1
72-319	LG 1042	X	1
72-322	LG 1041	X	1
72-323	LG 1041	X	1
72-341	LG 1045	N	1
72-342	LG 1043	N	1
72-343		N	1

OREGON	Page	Code	Pk.
72-344	LG 1032	N	1
72-345		N	1
72-346	LG 1035	N	1
72-347	LG 1046	N	1
72-348	LG 1046	N	1
72-406	LG 1029	X	1
72-407	LG 1029	X	1
72-408	LG 1029	X	1
72-409	LG 1030	X	1
72-410	LG 1030	X	1
72-413	LG 1030	X	1
72-414	LG 1030	X	1
72-420	LG 1047	X	1
72-427	LG 1029	X	1
72-430	LG 1034	X	1
72-436	LG 1034	X	1
72-437	LG 1030	X	1
72-442	LG 1037	X	1
72-446	LG 1030	X	1
72-449	LG 1030	X	1
72-450	LG 1037	X	1
72-456	LG 1036	X	1
72-458	LG 1031	X	1
72-500	LG 1034	X	1
72-508	LG 1034	X	1
72-510	LG 1036	X	1
72-701	LG 1044	X	1
72-722	LG 1045	X	1
72-723	LG 1043	X	1
72-725	LG 1044	X	1
72-728	LG 1044	X	1
72-729	LG 1044	X	1
72-735	LG 1045	X	1
72-736	LG 1045	X	1
72-737	LG 1045	X	1
72-738	LG 1045	X	1
72-739	LG 1046	X	1
72-741	LG 1046	X	1
72-745	LG 1033	X	1
72-746	LG 1032	X	1
72-747	LG 1036	X	1
72-749	LG 1046	X	1
72-756	LG 1046	X	1
72-758	LG 1042	X	1
72-765	LG 1043	X	1
72-795	LG 1044	X	1
72-796	LG 1043	X	1
72-800	LG 1047	X	1
72-804	LG 1047	X	1
73-001	LG 847	X	1
73-003	LG 847	X	1
73-006	LG 846	X	1
73-008	LG 848	X	1
73-013	LG 849	X	1
73-014	LG 849	X	1
73-016	LG 846	X	1
73-017	LG 848	X	1
73-018	LG 849	X	1
73-019	LG 849	X	1
73-020	LG 850	X	1
73-022	LG 847	X	1
73-023	LG 847	X	1
73-025	LG 855	X	1
73-026	LG 851	X	1
73-027	LG 850	X	1
73-028	LG 850	X	1
73-029	LG 847	X	1
73-030	LG 849	X	1
73-031	LG 850	X	1
73-036	LG 849	X	1
73-037	LG 847	X	1

N = New Item
F = NLA after inventories are sold

D = Discontinued after 2019 catalog
X = Active part number

2019 Numerical Index

OREGON	Page	Code	Pk.
73-038	LG 851	X	1
73-039	LG 846	X	1
73-040	LG 849	X	1
73-043	LG 847	X	1
73-044	LG 849	X	1
73-046	LG 847	X	1
73-048	LG 846	X	1
73-049	LG 847	X	1
73-050	LG 846	X	1
73-051	LG 846	X	1
73-052	LG 850	X	1
73-053	LG 850	X	1
73-054	LG 848	X	1
73-055	LG 848	X	1
73-056	LG 848	X	1
73-057	LG 848	X	1
73-058	LG 848	X	1
73-059	LG 850	X	1
73-100	LG 850	X	1
73-351	LG 843	X	1
73-352-0	LG 844	X	1
73-353-0	LG 844	X	1
73-560	LG 844	X	1
73-561	LG 843	X	1
73-562-0	LG 842	X	1
73-564-0	LG 843	X	1
73-800	LG 714	N	1
73-802	LG 714	N	1
73-819	LG 843	X	1
73-821	LG 842	X	1
73-822	LG 842	X	1
73-823	LG 849	X	1
73-824	LG 847	X	1
73-825	LG 850	X	1
73-826		X	1
73-827		X	1
73-828	LG 856	X	1
73-829	LG 856	X	1
73-830	LG 856	X	1
73-831	LG 856	X	1
73-832	LG 855	X	1
73-833	LG 855	X	1
73-834	LG 856	X	1
73-835	LG 849	X	1
73-836	LG 802	X	1
73-837	LG 802	X	1
74-015	LG 720	N	1
74-016	LG 709	N	1
74-018	LG 709	N	1
74-019	LG 715	N	1
74-020	LG 714	N	1
74-021	LG 703	N	1
74-054	LG 721	X	1
74-072	LG 721	X	1
74-317	LG 721	X	1
74-732	LG 721	X	1
75-000	LG 262	X	1
75-001	LG 308	X	1
75-002	LG 301	X	1
75-004	LG 301	X	1
75-005	LG 307	X	1
75-008	LG 301	X	1
75-009	LG 301	X	1
75-010	LG 311	X	1
75-012	LG 301	X	1
75-016	LG 301	X	1
75-018	LG 301	X	1
75-020	LG 302	X	1
75-021	LG 274	X	1
75-022	LG 307	X	1
75-023	LG 302	X	1

OREGON	Page	Code	Pk.
75-024	LG 302	X	1
75-025	LG 253	X	1
75-026	LG 307	X	1
75-027	LG 302	X	1
75-028	LG 302	X	1
75-029	LG 253	X	1
75-031	LG 278	X	1
75-035	LG 302	X	1
75-036	LG 297	X	1
75-038	LG 307	X	1
75-040	LG 306	X	1
75-041	LG 255	X	1
75-042	LG 308	X	1
75-043	LG 312	X	1
75-044	LG 313	X	1
75-045	LG 307	X	1
75-047	LG 313	X	1
75-048	LG 313	X	1
75-052	LG 313	X	1
75-054	LG 312	X	1
75-055	LG 255	X	1
75-057	LG 307	X	1
75-058	LG 255	X	1
75-059	LG 318	X	1
75-060	LG 322	X	1
75-061	LG 307	X	1
75-063	LG 307	X	1
75-065	LG 307	X	1
75-066	LG 251	X	1
75-067	LG 862	X	1
75-068	LG 318	X	1
75-072	LG 268	X	1
75-073	LG 319	X	1
75-075	LG 322	X	1
75-079	LG 301	X	1
75-080	LG 862	X	1
75-084	LG 265	X	1
75-086	LG 265	X	1
75-087	LG 265	X	1
75-090	LG 301	X	1
75-091	LG 302	X	1
75-092	LG 304	X	1
75-094	LG 252	X	1
75-095	LG 268	X	1
75-096	LG 265	X	1
75-097	LG 289	X	1
75-098	LG 251	X	1
75-099	LG 262	X	1
75-101	LG 269	X	1
75-103	LG 308	X	1
75-105	LG 319	X	1
75-106	LG 261	X	1
75-107	LG 254	X	1
75-108	LG 289	X	1
75-109	LG 303	X	1
75-111	LG 306	X	1
75-112	LG 306	X	1
75-113	LG 281	X	1
75-114	LG 281	X	1
75-115	LG 260	X	1
75-117	LG 265	X	1
75-118	LG 302	X	1
75-119	LG 302	X	1
75-120	LG 300	X	1
75-122	LG 307	X	1
75-123	LG 300	X	1
75-125	LG 269	X	1
75-128	LG 253	X	1
75-129	LG 255	X	1
75-130	LG 269	X	1
75-131	LG 269	X	1

OREGON	Page	Code	Pk.
75-133	LG 269	X	1
75-134	LG 275	X	1
75-135	LG 308	X	1
75-136	LG 309	X	1
75-137	LG 309	X	1
75-138	LG 310	X	1
75-142	LG 310	X	1
75-143	LG 310	X	1
75-144	LG 284	X	1
75-145	LG 300	X	1
75-148	LG 300	X	1
75-151	LG 308	X	1
75-152	LG 308	X	1
75-154	LG 312	X	1
75-155	LG 312	X	1
75-157	LG 251	X	1
75-158	LG 251	X	1
75-159	LG 303	X	1
75-160	LG 303	X	1
75-161	LG 255	X	1
75-163	LG 261	X	1
75-164	LG 262	X	1
75-165	LG 322	X	1
75-167	LG 289	X	1
75-168	LG 310	X	1
75-169	LG 290	X	1
75-170	LG 290	X	1
75-171	LG 289	X	1
75-177	LG 281	X	1
75-178	LG 281	X	1
75-179	LG 310	X	1
75-180	LG 254	X	1
75-181	LG 280	X	1
75-186	LG 281	X	1
75-188	LG 256	X	1
75-192	LG 251	X	1
75-193	LG 269	X	1
75-194	LG 289	X	1
75-195	LG 254	X	1
75-196	LG 290	X	1
75-197	LG 262	X	1
75-199	LG 254	X	1
75-204	LG 309	X	1
75-205	LG 322	X	1
75-207	LG 256	X	1
75-208	LG 277	X	1
75-209	LG 308	X	1
75-210	LG 309	X	1
75-211	LG 277	X	1
75-212	LG 268	X	1
75-214	LG 309	X	1
75-215	LG 313	X	1
75-216	LG 257	X	1
75-218	LG 316	X	1
75-219	LG 319	X	1
75-221	LG 280	X	1
75-222	LG 252	X	1
75-223	LG 269	X	1
75-225	LG 322	X	1
75-226	LG 281	X	1
75-227	LG 281	X	1
75-230	LG 281	X	1
75-231	LG 281	X	1
75-232	LG 281	X	1
75-234	LG 281	X	1
75-235	LG 281	X	1
75-236	LG 282	X	1
75-240	LG 297	X	1
75-242	LG 288	X	1
75-243	LG 288	X	1
75-246	LG 295	X	1

N = New Item
F = NLA after inventories are sold

D = Discontinued after 2019 catalog
X = Active part number

OREGON	Page	Code	Pk.
75-247	LG 295	X	1
75-248	LG 294	X	1
75-249	LG 305	X	1
75-260	LG 312	X	1
75-263	LG 304	X	1
75-264	LG 304	X	1
75-266	LG 254	X	1
75-267	LG 309	X	1
75-268	LG 313	X	1
75-269	LG 252	X	1
75-270	LG 257	X	1
75-272	LG 684	X	1
75-273	LG 320	X	1
75-274	LG 322	X	1
75-275	LG 322	X	1
75-277	LG 324	X	1
75-278	LG 324	X	1
75-281	LG 301	X	1
75-283	LG 256	X	1
75-289	LG 863	X	1
75-292	LG 281	X	1
75-295	LG 295	X	1
75-296	LG 295	X	1
75-297	LG 295	X	1
75-298	LG 295	X	1
75-299	LG 295	X	1
75-300	LG 295	X	1
75-320	LG 334	X	1
75-321	LG 334	X	1
75-322	LG 334	X	1
75-323	LG 334	X	1
75-324	LG 334	X	1
75-325	LG 334	X	1
75-326	LG 334	X	1
75-327	LG 334	X	1
75-328	LG 334	X	1
75-329	LG 334	X	1
75-330	LG 334	X	1
75-331	LG 334	X	1
75-332	LG 334	X	1
75-333	LG 334	X	1
75-334	LG 334	X	1
75-335	LG 334	X	1
75-336	LG 334	X	1
75-337	LG 334	X	1
75-338	LG 334	X	1
75-339	LG 334	X	1
75-340	LG 334	X	1
75-341	LG 334	X	1
75-342	LG 334	X	1
75-343	LG 334	X	1
75-344	LG 334	X	1
75-345	LG 334	X	1
75-346	LG 334	X	1
75-348	LG 334	X	1
75-349	LG 334	X	1
75-350	LG 334	X	1
75-353	LG 319	X	1
75-354	LG 319	X	1
75-360	LG 294	X	1
75-361	LG 254	X	1
75-362	LG 256	X	1
75-363	LG 304	X	1
75-364	LG 304	X	1
75-365	LG 862	X	1
75-367	LG 306	X	1
75-368	LG 309	X	1
75-370	LG 257	X	1
75-371	LG 316	X	1
75-372	LG 316	X	1
75-373	LG 322	X	1

OREGON	Page	Code	Pk.
75-378	LG 324	X	1
75-380	LG 324	X	1
75-400	LG 335	X	1
75-401	LG 335	X	1
75-402	LG 335	X	1
75-403	LG 256	X	1
75-404	LG 335	X	1
75-405	LG 335	X	1
75-406	LG 335	X	1
75-407	LG 335	X	1
75-408	LG 335	X	1
75-409	LG 335	X	1
75-410	LG 335	X	1
75-411	LG 335	X	1
75-412	LG 335	X	1
75-413	LG 335	X	1
75-414	LG 335	X	1
75-417	LG 335	X	1
75-418	LG 334	X	1
75-419	LG 334	X	1
75-420	LG 334	X	1
75-421	LG 334	X	1
75-422	LG 334	X	1
75-423	LG 334	X	1
75-424	LG 334	X	1
75-425	LG 334	X	1
75-426	LG 334	X	1
75-427	LG 334	X	1
75-428	LG 334	X	1
75-429	LG 334	X	1
75-430	SFS 59	X	1
75-431	LG 334	X	1
75-432	LG 334	X	1
75-433	LG 334	X	1
75-434	LG 334	X	1
75-435	LG 334	X	1
75-436	LG 334	X	1
75-437	LG 334	X	1
75-438	LG 334	X	1
75-439	LG 334	X	1
75-440	LG 334	X	1
75-441	LG 334	X	1
75-442	LG 334	X	1
75-443	LG 334	X	1
75-444	LG 334	X	1
75-445	LG 334	X	1
75-446	LG 334	X	1
75-447	LG 334	X	1
75-448	LG 334	X	1
75-449	LG 334	X	1
75-450	LG 334	X	1
75-451	LG 334	X	1
75-452	LG 334	X	1
75-453	LG 334	X	1
75-454	LG 334	X	1
75-455	LG 334	X	1
75-456	LG 334	X	1
75-457	LG 334	X	1
75-458	LG 334	X	1
75-459	LG 334	X	1
75-460	LG 334	X	1
75-461	LG 334	X	1
75-462	LG 334	X	1
75-463	LG 334	X	1
75-464	LG 334	X	1
75-465	LG 334	X	1
75-466	LG 334	X	1
75-467	LG 334	X	1
75-468	LG 334	X	1
75-469	LG 335	X	1
75-470	LG 335	X	1

OREGON	Page	Code	Pk.
75-471	LG 335	X	1
75-472	LG 335	X	1
75-473	LG 335	X	1
75-474	LG 335	X	1
75-475	LG 335	X	1
75-476	LG 335	X	1
75-477	LG 335	X	1
75-478	LG 335	X	1
75-479	LG 335	X	1
75-480	LG 335	X	1
75-481	LG 335	X	1
75-482	LG 335	X	1
75-483	LG 335	X	1
75-484	LG 335	X	1
75-485	LG 335	X	1
75-486	LG 335	X	1
75-487	LG 335	X	1
75-488	LG 335	X	1
75-489	LG 335	X	1
75-490	LG 335	X	1
75-491	LG 335	X	1
75-492	LG 335	X	1
75-493	LG 335	X	1
75-494	LG 335	X	1
75-495	LG 335	X	1
75-496	LG 335	X	1
75-497	LG 335	X	1
75-498	LG 335	X	1
75-499	LG 335	X	1
75-500	LG 335	X	1
75-501	LG 288	N	1
75-502	LG 300	N	1
75-503	LG 256	X	1
75-508	LG 319	X	1
75-509	LG 279	N	1
75-510	LG 279	N	1
75-513	LG 279	N	1
75-514	LG 282	N	1
75-515	LG 282	N	1
75-516	LG 282	N	1
75-517	LG 269	N	1
75-518	LG 301	N	1
75-525	LG 334	X	1
75-527	LG 334	X	1
75-528	LG 334	X	1
75-529	LG 334	X	1
75-530	LG 334	X	1
75-531	LG 334	X	1
75-532	LG 334	X	1
75-533	LG 334	X	1
75-534	LG 334	X	1
75-535	LG 334	X	1
75-536	LG 334	X	1
75-537	LG 334	X	1
75-538	LG 334	X	1
75-539	LG 334	X	1
75-540	LG 334	X	1
75-541	LG 334	X	1
75-542	LG 334	X	1
75-543	LG 334	X	1
75-544	LG 334	X	1
75-545	LG 334	X	1
75-546	LG 334	X	1
75-547	LG 334	X	1
75-548	LG 334	X	1
75-549	LG 334	X	1
75-550	LG 334	X	1
75-551	LG 334	X	1
75-552	LG 334	X	1
75-553	LG 334	X	1
75-554	LG 334	X	1

N = New Item
F = NLA after inventories are sold

D = Discontinued after 2019 catalog
X = Active part number

2019 Numerical Index

OREGON	Page	Code	Pk.
75-555	LG 334	X	1
75-556	LG 334	X	1
75-557	LG 334	X	1
75-558	LG 253	X	1
75-559	LG 334	X	1
75-560	LG 334	X	1
75-561	LG 334	X	1
75-562	LG 334	X	1
75-563	LG 253	X	1
75-564	LG 334	X	1
75-565	LG 253	X	1
75-566	LG 334	X	1
75-567	LG 334	X	1
75-568	LG 334	X	1
75-569	LG 335	X	1
75-570	LG 335	X	1
75-571	LG 335	X	1
75-572	LG 335	X	1
75-573	LG 335	X	1
75-574	LG 335	X	1
75-575	LG 335	X	1
75-576	LG 335	X	1
75-577	LG 335	X	1
75-578	LG 335	X	1
75-579	LG 335	X	1
75-580	LG 335	X	1
75-581	LG 335	X	1
75-582	LG 254	X	1
75-583	LG 335	X	1
75-584	LG 335	X	1
75-585	LG 335	X	1
75-586	LG 335	X	1
75-587	LG 335	X	1
75-588	LG 335	X	1
75-589	LG 335	X	1
75-590	LG 335	X	1
75-591	LG 335	X	1
75-592	LG 335	X	1
75-593	LG 335	X	1
75-594	LG 335	X	1
75-595	LG 335	X	1
75-596	LG 335	X	1
75-597	LG 335	X	1
75-598	LG 335	X	1
75-599	LG 335	X	1
75-600	LG 276	X	1
75-625	LG 313	X	1
75-629	LG 314	X	1
75-631	LG 314	X	1
75-632	LG 314	X	1
75-634	LG 314	X	1
75-635	LG 314	X	1
75-637	LG 253	X	1
75-641	LG 314	X	1
75-642	LG 314	X	1
75-644	LG 314	X	1
75-645	LG 314	X	1
75-646	LG 257	X	1
75-648	LG 257	X	1
75-649	LG 258	X	1
75-654	LG 263	X	1
75-655	LG 274	X	1
75-656	LG 274	X	1
75-658	LG 275	X	1
75-659	LG 275	X	1
75-661	LG 277	X	1
75-662	LG 258	X	1
75-663	LG 279	X	1
75-664	LG 279	X	1
75-665	LG 279	X	1
75-667	LG 282	X	1

OREGON	Page	Code	Pk.
75-669	LG 284	X	1
75-670	LG 288	X	1
75-671	LG 287	X	1
75-672	LG 294	X	1
75-673	LG 305	X	1
75-674	LG 303	X	1
75-675	LG 303	X	1
75-676	LG 304	X	1
75-677	LG 304	X	1
75-679	LG 309	X	1
75-681	LG 313	X	1
75-682	LG 258	X	1
75-684	LG 322	X	1
75-685	LG 324	X	1
75-686	LG 324	X	1
75-687	LG 297	X	1
75-688	LG 297	X	1
75-701	LG 273	X	1
75-703	LG 295	X	1
75-706	LG 256	X	1
75-708	LG 295	X	1
75-709	LG 305	X	1
75-710	LG 257	X	1
75-711	LG 310	X	1
75-712	LG 310	X	1
75-713	LG 310	X	1
75-714	LG 276	X	1
75-715	LG 313	X	1
75-716	LG 276	X	1
75-720	LG 270	X	1
75-724	LG 310	X	1
75-727	LG 319	X	1
75-755	LG 258	X	1
75-756	LG 279	X	1
75-757	LG 256	X	1
75-759	LG 279	X	1
75-798	LG 253	X	1
75-799	LG 293	X	1
75-800	LG 257	X	1
75-801	LG 296	X	1
75-802	LG 296	X	1
75-803	LG 258	X	1
75-804	LG 296	X	1
75-806	LG 293	X	1
75-807	LG 255	X	1
75-808	LG 256	X	1
75-810	LG 257	X	1
75-811	LG 254	X	1
75-812	LG 275	X	1
75-813	LG 276	X	1
75-814	LG 276	X	1
75-815	LG 277	X	1
75-816	LG 257	X	1
75-818	LG 253	X	1
75-819	LG 292	X	1
75-820	LG 273	X	1
75-821	LG 254	X	1
75-822	LG 254	X	1
75-823	LG 254	X	1
75-824	LG 274	X	1
75-886	LG 276	X	1
75-887	LG 323	X	1
75-888	LG 322	X	1
75-889	LG 252	X	1
75-890	LG 289	X	1
75-892	LG 255	X	1
75-893	LG 263	X	1
75-894	LG 263	X	1
75-895	LG 263	X	1
75-897	LG 262	X	1
75-898	LG 262	X	1

OREGON	Page	Code	Pk.
75-899	LG 263	X	1
75-902	LG 331	X	10
75-904	LG 313	X	1
75-906	LG 251	X	1
75-907	LG 264	X	1
75-908	LG 265	X	1
75-909	LG 251	X	1
75-910	LG 331	X	1
75-911	LG 262	X	1
75-912	LG 255	X	1
75-913	LG 291	X	1
75-914	LG 291	X	1
75-917	LG 282	X	1
75-918	LG 293	X	1
75-919	LG 293	X	1
75-934	LG 310	X	1
75-935	LG 255	X	1
75-936	LG 290	X	1
75-938	LG 250	X	1
75-939	LG 322	X	1
75-943	LG 283	X	1
75-944	LG 284	X	1
75-945	LG 284	X	1
75-946	LG 283	X	1
75-948	LG 331	X	1
75-949	LG 330	X	1
75-951	LG 331	X	1
75-952	LG 330	X	1
75-954	LG 284	X	1
75-955	LG 278	X	1
75-956	LG 278	X	1
75-957	LG 282	X	1
75-960	LG 257	X	1
75-961	LG 281	X	1
75-963	LG 281	X	1
75-964	LG 309	X	1
75-967	LG 258	X	1
75-972	LG 295	X	1
75-973	LG 294	X	1
75-974	LG 294	X	1
75-975	LG 294	X	1
75-976	LG 292	X	1
75-977	LG 310	X	1
75-978	LG 293	X	1
75-979	LG 255	X	1
75-980	LG 863	X	1
75-983	LG 862	X	1
75-984	LG 257	X	1
75-992	LG 293	X	1
75-993	LG 303	X	1
75-994	LG 304	X	1
75-995	LG 303	X	1
75-996	LG 309	X	1
75-999	LG 253	X	1
75-A100	LG 337	X	1
75-A101	LG 337	X	1
75-A102	LG 337	X	1
75-A103	LG 337	X	1
75-A104	LG 337	X	1
75-A105	LG 337	X	1
75-A106	LG 337	X	1
75-A107	LG 337	X	1
75-A108	LG 337	X	1
75-A109	LG 337	X	1
75-A110	LG 337	X	1
75-A111	LG 337	X	1
75-A112	LG 337	X	1
75-A113	LG 337	X	1
75-A114	LG 337	X	1
75-A115	LG 337	X	1
75-A116	LG 337	X	1

N = New Item
F = NLA after inventories are sold

D = Discontinued after 2019 catalog
X = Active part number

OREGON	Page	Code	Pk.
75-A117	LG 337	X	1
75-A118	LG 337	X	1
75-A119	LG 337	X	1
75-A120	LG 337	X	1
75-A121	LG 337	X	1
75-A122	LG 337	X	1
75-A123	LG 337	X	1
75-A124	LG 337	X	1
75-A125	LG 337	X	1
75-A126	LG 337	X	1
75-A127	LG 337	X	1
75-A128	LG 337	X	1
75-A129	LG 337	X	1
75-A130	LG 337	X	1
75-A131	LG 337	X	1
75-A132	LG 337	X	1
75-A133	LG 337	X	1
75-A134	LG 337	X	1
75-A135	LG 337	X	1
75-A136	LG 337	X	1
75-A137	LG 337	X	1
75-A138	LG 337	X	1
75-A139	LG 337	X	1
75-A14	LG 336	X	1
75-A140	LG 337	X	1
75-A141	LG 337	X	1
75-A142	LG 337	X	1
75-A143	LG 337	X	1
75-A144	LG 337	X	1
75-A145	LG 337	X	1
75-A146	LG 337	X	1
75-A147	LG 337	X	1
75-A148	LG 337	X	1
75-A149	LG 337	X	1
75-A15	LG 336	X	1
75-A150	LG 337	X	1
75-A16	LG 336	X	1
75-A17	LG 336	X	1
75-A18	LG 336	X	1
75-A19	LG 336	X	1
75-A20	LG 336	X	1
75-A21	LG 336	X	1
75-A22	LG 336	X	1
75-A23	LG 336	X	1
75-A24	LG 336	X	1
75-A25	LG 336	X	1
75-A26	LG 336	X	1
75-A27	LG 336	X	1
75-A28	LG 336	X	1
75-A29	LG 336	X	1
75-A30	LG 336	X	1
75-A31	LG 336	X	1
75-A32	LG 336	X	1
75-A33	LG 336	X	1
75-A34	LG 336	X	1
75-A35	LG 336	X	1
75-A36	LG 336	X	1
75-A37	LG 336	X	1
75-A38	LG 336	X	1
75-A39	LG 336	X	1
75-A40	LG 336	X	1
75-A41	LG 336	X	1
75-A42	LG 336	X	1
75-A43	LG 336	X	1
75-A44	LG 336	X	1
75-A45	LG 336	X	1
75-A46	LG 336	X	1
75-A47	LG 336	X	1
75-A48	LG 336	X	1
75-A49	LG 336	X	1
75-A50	LG 336	X	1

OREGON	Page	Code	Pk.
75-A51	LG 336	X	1
75-A52	LG 336	X	1
75-A53	LG 336	X	1
75-A54	LG 336	X	1
75-A55	LG 336	X	1
75-A56	LG 336	X	1
75-A57	LG 336	X	1
75-A58	LG 336	X	1
75-A59	LG 336	X	1
75-A60	LG 336	X	1
75-A61	LG 336	X	1
75-A62	LG 336	X	1
75-A63	LG 336	X	1
75-A64	LG 336	X	1
75-A65	LG 336	X	1
75-A66	LG 336	X	1
75-A67	LG 336	X	1
75-A68	LG 336	X	1
75-A69	LG 336	X	1
75-A70	LG 336	X	1
75-A71	LG 336	X	1
75-A72	LG 336	X	1
75-A73	LG 336	X	1
75-A74	LG 336	X	1
75-A75	LG 336	X	1
75-A76	LG 336	X	1
75-A77	LG 336	X	1
75-A78	LG 336	X	1
75-A79	LG 336	X	1
75-A80	LG 336	X	1
75-A81	LG 336	X	1
75-A82	LG 336	X	1
75-A83	LG 336	X	1
75-A84	LG 336	X	1
75-A85	LG 336	X	1
75-A86	LG 336	X	1
75-A87	LG 336	X	1
75-A88	LG 336	X	1
75-A89	LG 336	X	1
75-A90	LG 336	X	1
75-A91	LG 336	X	1
75-A92	LG 337	X	1
75-A93	LG 337	X	1
75-A94	LG 337	X	1
75-A95	LG 337	X	1
75-A96	LG 337	X	1
75-A97	LG 337	X	1
75-A98	LG 337	X	1
75-A99	LG 337	X	1
75-B100	LG 337	X	1
75-B101	LG 337	X	1
75-B102	LG 337	X	1
75-B103	LG 337	X	1
75-B104	LG 337	X	1
75-B105	LG 337	X	1
75-B106	LG 337	X	1
75-B107	LG 337	X	1
75-B108	LG 337	X	1
75-B109	LG 337	X	1
75-B110	LG 337	X	1
75-B111	LG 337	X	1
75-B112	LG 337	X	1
75-B113	LG 337	X	1
75-B114	LG 337	X	1
75-B115	LG 337	X	1
75-B116	LG 337	X	1
75-B117	LG 337	X	1
75-B118	LG 337	X	1
75-B119	LG 337	X	1
75-B120	LG 337	X	1
75-B121	LG 337	X	1

OREGON	Page	Code	Pk.
75-B122	LG 337	X	1
75-B123	LG 337	X	1
75-B124	LG 337	X	1
75-B125	LG 337	X	1
75-B126	LG 337	X	1
75-B127	LG 337	X	1
75-B128	LG 337	X	1
75-B129	LG 337	X	1
75-B130	LG 337	X	1
75-B131	LG 337	X	1
75-B132	LG 337	X	1
75-B133	LG 337	X	1
75-B134	LG 337	X	1
75-B135	LG 337	X	1
75-B136	LG 337	X	1
75-B137	LG 337	X	1
75-B138	LG 337	X	1
75-B139	LG 337	X	1
75-B140	LG 337	X	1
75-B141	LG 337	X	1
75-B142	LG 337	X	1
75-B143	LG 337	X	1
75-B144	LG 337	X	1
75-B145	LG 337	X	1
75-B146	LG 337	X	1
75-B147	LG 337	X	1
75-B148	LG 337	X	1
75-B149	LG 337	X	1
75-B150	LG 337	X	1
75-B19	LG 336	X	1
75-B20	LG 336	X	1
75-B21	LG 336	X	1
75-B22	LG 336	X	1
75-B23	LG 336	X	1
75-B24	LG 336	X	1
75-B25	LG 336	X	1
75-B26	LG 336	X	1
75-B27	LG 336	X	1
75-B28	LG 336	X	1
75-B29	LG 336	X	1
75-B30	LG 336	X	1
75-B31	LG 336	X	1
75-B32	LG 336	X	1
75-B33	LG 336	X	1
75-B34	LG 336	X	1
75-B35	LG 336	X	1
75-B36	LG 336	X	1
75-B37	LG 336	X	1
75-B38	LG 336	X	1
75-B39	LG 336	X	1
75-B40	LG 336	X	1
75-B41	LG 336	X	1
75-B42	LG 336	X	1
75-B43	LG 336	X	1
75-B44	LG 336	X	1
75-B45	LG 336	X	1
75-B46	LG 336	X	1
75-B47	LG 336	X	1
75-B48	LG 336	X	1
75-B49	LG 336	X	1
75-B50	LG 336	X	1
75-B51	LG 336	X	1
75-B52	LG 336	X	1
75-B53	LG 336	X	1
75-B54	LG 336	X	1
75-B55	LG 336	X	1
75-B56	LG 336	X	1
75-B57	LG 336	X	1
75-B58	LG 336	X	1
75-B59	LG 336	X	1
75-B60	LG 336	X	1

N = New Item
F = NLA after inventories are sold

D = Discontinued after 2019 catalog
X = Active part number

2019 Numerical Index

OREGON	Page	Code	Pk.
75-B61	LG 336	X	1
75-B62	LG 336	X	1
75-B63	LG 336	X	1
75-B64	LG 336	X	1
75-B65	LG 336	X	1
75-B66	LG 336	X	1
75-B67	LG 336	X	1
75-B68	LG 336	X	1
75-B69	LG 336	X	1
75-B70	LG 336	X	1
75-B71	LG 336	X	1
75-B72	LG 336	X	1
75-B73	LG 336	X	1
75-B74	LG 336	X	1
75-B75	LG 336	X	1
75-B76	LG 336	X	1
75-B77	LG 336	X	1
75-B78	LG 336	X	1
75-B79	LG 336	X	1
75-B80	LG 336	X	1
75-B81	LG 336	X	1
75-B82	LG 336	X	1
75-B83	LG 336	X	1
75-B84	LG 336	X	1
75-B85	LG 336	X	1
75-B86	LG 336	X	1
75-B87	LG 336	X	1
75-B88	LG 336	X	1
75-B89	LG 336	X	1
75-B90	LG 336	X	1
75-B91	LG 337	X	1
75-B92	LG 337	X	1
75-B93	LG 337	X	1
75-B94	LG 337	X	1
75-B95	LG 337	X	1
75-B96	LG 337	X	1
75-B97	LG 337	X	1
75-B98	LG 337	X	1
75-B99	LG 337	X	1
76-002	LG 726	X	1
76-014	LG 726	X	1
76-015	LG 804	X	1
76-018	LG 938	X	1
76-019	LG 938	X	1
76-020	LG 802	X	1
76-021	LG 938	X	1
76-025	LG 941	X	1
76-031	LG 804	X	1
76-034		X	10
76-039	LG 1037	X	1
76-040	LG 941	X	1
76-041	LG 940	X	1
76-042	LG 939	X	1
76-043	LG 940	X	1
76-044	LG 940	X	1
76-050	LG 941	N	1
76-051	LG 941	N	1
76-052	LG 940	N	1
76-053	LG 940	N	1
76-055	LG 940	N	1
76-056		N	1
76-057	LG 941	N	1
76-067-0	LG 726	X	1
76-070-0	LG 726	X	1
76-073-0	LG 726	X	1
76-075	LG 727	X	1
76-076	LG 727	X	1
76-100	LG 939	X	1
76-110	LG 726	X	1
76-143	LG 698	X	1
77-134	LG 864	N	10

OREGON	Page	Code	Pk.
77-145	LG 864	N	10
77-167	LG 864	N	10
77-189	LG 864	N	10
77-193	LG 864	N	10
77-194	LG 864	N	10
77-196	LG 864	N	10
77-197	LG 864	N	10
77-198	LG 864	N	10
77-199	LG 864	N	10
77-200	LG 864	N	10
77-300-1	LG 864	X	10
77-301-1	LG 864	X	10
77-302-1	LG 864	X	10
77-303-1	LG 865	X	10
77-304-1	LG 865	X	10
77-305-1	LG 865	X	10
77-306-1	LG 865	X	10
77-307-1	LG 865	X	10
77-308-1	LG 865	X	10
77-309-1	LG 865	X	10
77-310-1	LG 865	X	10
77-311-1	LG 865	X	10
77-312-1	LG 865	X	10
77-313-1	LG 865	X	10
77-314-1	LG 865	X	10
77-315-1	LG 865	X	10
77-316-1	LG 865	X	10
77-317-1	LG 865	X	10
77-318-1	LG 865	X	10
77-319-1	LG 865	X	10
77-321-1	LG 865	X	10
77-323-1	LG 865	X	10
77-324-1	LG 865	X	10
77-355-1	LG 865	X	10
77-366		N	10
77-400-0		X	1
77-401		X	1
77-404		X	1
77-407		X	1
77-411		X	1
77-414		X	1
77-415		X	1
77-416		X	1
78-000	LG 823	X	1
78-003	LG 839	X	1
78-005	LG 823	X	1
78-006	LG 828	X	1
78-007	LG 833	X	1
78-009	LG 827	X	1
78-010	LG 827	X	1
78-011	LG 827	X	1
78-013	LG 825	X	1
78-014	LG 825	X	1
78-019	LG 831	X	1
78-020	LG 825	X	1
78-021	LG 832	X	1
78-022	LG 827	X	1
78-023	LG 822	X	1
78-025	LG 829	X	1
78-026	LG 822	X	1
78-027	LG 832	X	1
78-028	LG 831	X	1
78-029	LG 831	X	1
78-031	LG 826	X	1
78-032	LG 822	X	1
78-033	LG 834	X	1
78-034	LG 822	X	1
78-037	LG 822	X	1
78-040	LG 823	X	1
78-041	LG 823	X	1
78-043	LG 824	X	1

OREGON	Page	Code	Pk.
78-044-1	LG 834	X	1
78-045	LG 828	X	1
78-046	LG 826	X	1
78-047	LG 832	X	1
78-048	LG 833	X	1
78-049	LG 833	X	1
78-050	LG 831	X	1
78-051	LG 824	X	1
78-052	LG 824	X	1
78-053	LG 824	X	1
78-054	LG 824	X	1
78-055	LG 833	X	1
78-056	LG 825	X	1
78-062	LG 835	X	1
78-065	LG 832	X	1
78-066	LG 838	X	1
78-098	LG 832	X	1
78-100	LG 249	X	10
78-101	LG 249	X	10
78-102	LG 823	X	10
78-103	LG 823	X	10
78-104	LG 823	X	1
78-105-0	LG 823	X	1
78-106-0	LG 823	X	1
78-110	LG 833	X	1
78-111	LG 826	X	1
78-112	LG 829	X	1
78-113	LG 829	X	1
78-114	LG 829	X	1
78-116	LG 826	X	1
78-118-0	LG 830	X	1
78-121	LG 827	X	1
78-128	LG 829	X	1
78-129	LG 830	X	1
78-130	LG 829	X	1
78-131	LG 823	X	1
78-132	LG 830	X	1
78-133	LG 831	X	1
78-134	LG 829	X	1
78-300	LG 833	X	1
78-640	LG 835	X	1
78-641	LG 835	X	1
78-642	LG 841	X	1
78-643	LG 835	X	1
78-644	LG 835	X	1
78-646	LG 841	X	1
78-649	LG 841	X	1
78-650	LG 835	X	1
78-651	LG 835	X	1
78-673	LG 839	X	1
78-675	LG 839	X	1
78-676	LG 839	X	1
78-677	LG 839	X	1
78-678	LG 835	X	1
78-680	LG 840	X	1
78-690	LG 840	X	1
79-000	LG 802	X	1
79-724	LG 556	X	1
79-728	LG 556	X	1
80-014	LG 727	X	1
80-015	LG 853	X	1
80-016	LG 853	X	10
80-017	LG 852	X	10
80-018	LG 852	X	10
80-019	LG 852	X	10
80-036	LG 727	X	1
80-037	LG 727	X	10
80-122	LG 340	X	1
80-145	LG 341	X	1
80-146	LG 341	X	1
80-740	LG 852	X	10

N = New Item
F = NLA after inventories are sold

D = Discontinued after 2019 catalog
X = Active part number

OREGON	Page	Code	Pk.
80-741	LG 852	X	10
80-742	LG 852	X	10
80-743	LG 852	X	10
80-745	LG 728	X	10
80-746	LG 852	X	10
80-747	LG 852	X	10
80-748	LG 852	X	10
80-749	LG 853	X	1
81-010		X	1
81-012	LG 802	X	1
81-013	LG 802	X	1
81-015	LG 802	X	1
81-020	LG 803	X	1
81-101		X	1
81-102	LG 805	X	1
82-010	LG 869	X	1
82-011	LG 869	X	1
82-012	LG 872	X	1
82-013	LG 891	X	1
82-014	LG 871	X	1
82-014-B	LG 871	X	1
82-015		X	1
82-016	LG 875	X	1
82-017	LG 875	X	1
82-018	LG 875	X	1
82-019	LG 875	X	1
82-020	LG 903	X	1
82-021	LG 884	X	1
82-022	LG 886	X	1
82-023	LG 902	X	1
82-023-B	LG 902	X	1
82-024	LG 871	X	1
82-026	LG 872	X	1
82-028	LG 902	X	1
82-029		X	1
82-040	LG 890	X	1
82-041	LG 890	X	1
82-042	LG 891	X	1
82-043	LG 899	X	1
82-044	LG 879	X	1
82-051	LG 898	X	1
82-053	LG 905	X	1
82-054	LG 898	X	1
82-055	LG 887	X	1
82-056	LG 886	X	1
82-057	LG 905	X	1
82-058	LG 898	X	1
82-100	LG 802	X	1
82-101	LG 888	N	1
82-102	LG 889	N	1
82-103	LG 889	N	1
82-104	LG 881	N	1
82-105	LG 900	N	1
82-106	LG 882	N	1
82-108	LG 873	N	1
82-109	LG 901	N	1
82-110	LG 882	N	1
82-111	LG 905	N	1
82-126	LG 873	X	1
82-127	LG 899	N	1
82-128	LG 881	N	1
82-129	LG 873	N	1
82-130	LG 880	N	1
82-131	LG 900	N	1
82-132	LG 900	N	1
82-220	LG 871	X	1
82-221	LG 872	X	1
82-225	LG 871	X	1
82-225-B	LG 871	X	1
82-243	LG 902	X	1
82-243-B	LG 902	X	1

OREGON	Page	Code	Pk.
82-244	LG 910	X	10
82-245		X	1
82-250	LG 902	X	1
82-305	LG 908	X	1
82-306	LG 874	X	1
82-307-0	LG 874	X	1
82-308	LG 874	X	1
82-318	LG 884	X	1
82-320	LG 874	X	1
82-322	LG 883	X	1
82-323	LG 883	X	1
82-325	LG 903	X	1
82-328	LG 891	X	1
82-332	LG 891	X	1
82-333	LG 892	X	1
82-340	LG 883	X	1
82-341	LG 884	X	1
82-342	LG 884	X	1
82-344	LG 885	X	1
82-346	LG 885	X	1
82-347	LG 885	X	1
82-348	LG 885	X	1
82-349	LG 886	X	1
82-350	LG 889	X	1
82-351	LG 890	X	1
82-352	LG 890	X	1
82-354	LG 892	X	1
82-355	LG 892	X	1
82-356	LG 893	X	1
82-357	LG 877	X	1
82-358	LG 892	X	1
82-359	LG 893	X	1
82-360	LG 893	X	1
82-361	LG 887	X	1
82-401	LG 879	X	1
82-402	LG 879	X	1
82-403	LG 879	X	1
82-405	LG 878	X	1
82-406	LG 880	X	1
82-407	LG 880	X	1
82-408	LG 878	X	1
82-409	LG 878	X	1
82-411	LG 878	X	1
82-412	LG 53	X	1
82-493	LG 869	X	1
82-495	LG 870	X	1
82-500	LG 893	X	1
82-500-B	LG 893	X	1
82-501	LG 894	X	1
82-502	LG 894	X	1
82-503	LG 895	X	1
82-510	LG 872	X	1
82-511	LG 895	X	1
82-512	LG 895	X	1
82-513-2	LG 896	X	1
82-514	LG 869	X	1
82-515	LG 896	X	1
82-516	LG 896	X	1
82-517	LG 896	X	1
82-518	LG 897	X	1
82-519	LG 897	X	1
82-520	LG 897	X	1
82-552	LG 876	X	1
82-553	LG 876	X	1
82-554	LG 876	X	1
82-555	LG 876	X	1
82-557	LG 877	X	1
82-558	LG 877	X	1
82-674	LG 904	X	1
82-675	LG 904	X	1
82-676	LG 904	X	1

OREGON	Page	Code	Pk.
82-677	LG 903	X	1
82-678	LG 904	X	1
82-679	LG 870	X	1
82-680	LG 870	X	1
83-000	LG 815	X	12
83-001	LG 816	N	1
83-003		N	1
83-010	LG 819	X	12
83-011	LG 819	X	12
83-012	LG 819	X	12
83-013	LG 817	X	12
83-014	LG 819	X	1
83-028	LG 817	X	12
83-029	LG 815	X	12
83-030	LG 815	X	12
83-280	LG 815	X	12
83-282	LG 817	X	12
83-283	LG 818	X	12
83-284	LG 818	X	12
83-285	LG 814	X	12
83-300	LG 819	X	12
83-301	LG 816	X	12
83-302	LG 816	X	1
83-400	LG 819	X	1
83-401	LG 817	X	1
83-402	LG 817	X	1
83-403	LG 818	X	1
83-404	LG 818	X	1
83-501	LG 817	X	1
83-502	LG 817	X	1
83-503	LG 818	X	1
84-001	LG 675	X	1
84-002	LG 675	X	1
84-004	LG 675	X	1
84-005	LG 675	X	1
84-006	LG 675	X	1
84-007	LG 675	X	1
84-008	LG 675	X	1
84-009	LG 675	X	1
84-010	LG 913	X	1
84-011	LG 675	X	1
84-012	LG 675	X	1
84-013	LG 675	X	1
84-014	LG 856	X	1
84-027	LG 675	X	1
84-028	LG 675	X	1
84-029	LG 675	X	1
84-030	LG 675	X	1
84-031	LG 675	X	1
84-101	LG 954	X	1
84-102	LG 954	X	1
84-103	LG 954	X	1
85-001	LG 908	X	1
85-005		X	1
85-008	LG 909	X	1
85-010		X	1
85-011	LG 909	X	1
85-012	LG 909	X	1
85-017	LG 907	X	1
85-023	LG 907	X	1
85-028	LG 908	X	1
85-029	LG 909	X	1
85-032		X	1
85-034	LG 908	X	1
85-035	LG 908	X	1
85-036	LG 908	X	1
85-040		X	1
85-041		X	1
85-043		X	1
85-044	LG 906	X	1
85-045	LG 906	X	1

N = New Item
F = NLA after inventories are sold

D = Discontinued after 2019 catalog
X = Active part number

2019 Numerical Index

OREGON	Page	Code	Pk.
85-047	LG 906	X	1
85-048	LG 906	X	1
85-049	LG 906	X	1
85-050	LG 907	X	1
85-051	LG 907	X	1
85-052	LG 907	X	1
85-053	LG 907	X	1
85-054	LG 906	X	1
85-055	LG 906	X	1
85-112		N	1
86-001	LG 781	X	1
86-002	LG 781	N	1
86-005	LG 782	X	1
86-008	LG 782	X	1
86-009	LG 781	X	1
86-010	LG 782	X	1
86-019	LG 781	X	1
86-025	LG 781	X	1
86-029	LG 782	X	1
86-033	LG 781	X	1
86-036	LG 781	X	1
86-037	LG 781	X	1
88-009	SFS 62	X	1
88-010	SFS 61	X	1
88-011	SFS 62	X	1
88-012	SFS 62	X	1
88-015	SFS 60	X	1
88-016	SFS 60	X	1
88-017	SFS 62	X	1
88-018	SFS 60	X	1
88-021	SFS 59	X	1
88-022	SFS 59	X	1
88-023	SFS 61	X	1
88-025	SFS 61	X	1
88-028	SFS 61	X	1
88-029	SFS 60	X	1
88-033	SFS 62	X	1
88-034	SFS 62	X	1
88-035	SFS 60	X	1
88-037	SFS 61	X	1
88-038	SFS 59	X	1
88-039	SFS 59	X	1
88-043	SFS 60	X	1
88-045	SFS 62	X	1
88-047	SFS 61	X	1
88-048	SFS 61	X	1
88-049	SFS 60	X	1
88-065	SFS 62	X	1
88-066	SFS 62	X	1
88-100	SFS 58	X	1
88-101	SFS 58	X	1
88-102	SFS 58	X	1
88-103	SFS 58	X	1
88-104	SFS 59	X	1
88-109	SFS 58	X	1
88-110	SFS 58	X	1
88-111	SFS 58	X	1
88-112	SFS 58	X	1
88-113	SFS 58	X	1
88-114	SFS 59	X	1
88-115	SFS 59	X	1
88-116	SFS 59	X	1
88-118	SFS 59	X	1
88-400	SFS 67	X	1
88-405	SFS 67	X	1
89-001	LG 590	X	1
89-801	LG 368	X	10
90-109	LG 414	X	10
90-142	LG 368	X	6
90-143	LG 368	X	10
90-144	LG 368	X	6

OREGON	Page	Code	Pk.
90-145	LG 368	X	6
90-146	LG 368	X	6
90-205	LG 501	X	10
90-206	LG 414	X	6
90-207	LG 472	X	6
90-208	LG 502	X	6
90-309	LG 492	X	10
90-348	LG 484	X	6
90-354	LG 488	X	6
90-618	LG 368	X	10
90-619	LG 368	X	10
90-620	LG 368	X	6
90-621	LG 368	X	6
90-622	LG 368	X	6
90-643	LG 560	X	10
90-644	LG 561	X	10
90-651	LG 457	X	6
90-656	LG 406	X	10
90-669	LG 420	X	6
90-685	LG 540	x	6
90-697	LG 406	x	6
90-698	LG 510	x	10
91-003	LG 370	X	6
91-005	LG 458	X	10
91-034	LG 583	X	6
91-035	LG 393	X	6
91-036	LG 450	X	5
91-039	LG 487	X	6
91-046	LG 384	X	6
91-047	LG 384	X	5
91-050	LG 559	X	6
91-051	LG 559	X	10
91-056	LG 406	X	10
91-057	LG 409	X	6
91-058	LG 411	X	6
91-071	LG 393	X	10
91-073	LG 512	X	6
91-078	LG 490	X	6
91-079	LG 485	X	10
91-080	LG 490	N	6
91-087	LG 502	X	6
91-093	LG 389	X	10
91-096	LG 389	X	10
91-097	LG 388	X	6
91-117	LG 475	X	6
91-123	LG 395	X	6
91-126	LG 548	X	10
91-127	LG 396	X	10
91-128	LG 424	X	6
91-129	LG 396	X	6
91-135	LG 387	X	6
91-138	LG 488	X	6
91-141	LG 394	X	6
91-142	LG 395	X	5
91-144	LG 454	X	6
91-146	LG 419	X	6
91-167	LG 416	X	6
91-170	LG 437	X	10
91-178	LG 471	X	10
91-180	LG 460	X	6
91-181	LG 495	X	6
91-183	LG 370	X	6
91-184	LG 421	X	6
91-188	LG 439	X	6
91-207	LG 447	X	10
91-209	LG 552	X	6
91-217	LG 558	X	10
91-218	LG 420	X	6
91-235	LG 461	X	10
91-239	LG 454	X	6
91-242	LG 371	X	10

OREGON	Page	Code	Pk.
91-244	LG 450	X	10
91-253	LG 415	X	6
91-254	LG 456	X	5
91-255	LG 454	N	6
91-256	LG 437	X	6
91-259	LG 432	X	6
91-264	LG 473	X	6
91-265	LG 431	X	6
91-266	LG 431	X	10
91-291	LG 457	X	6
91-308	LG 467	X	6
91-311	LG 439	X	10
91-312	LG 478	X	6
91-313	LG 494	X	10
91-327	LG 404	X	6
91-329	LG 409	X	10
91-330	LG 513	X	6
91-332	LG 412	X	10
91-333	LG 406	X	10
91-335	LG 420	X	10
91-342	LG 447	X	6
91-352	LG 482	X	6
91-363	LG 481	X	10
91-364	LG 481	X	10
91-368	LG 460	X	10
91-369	LG 434	X	6
91-373	LG 383	X	10
91-374	LG 442	X	6
91-378	LG 414	X	6
91-380	LG 538	X	6
91-381	LG 483	X	6
91-383	LG 484	X	6
91-384	LG 487	X	6
91-389	LG 538	X	6
91-391	LG 489	X	6
91-393	LG 485	X	6
91-394	LG 489	X	6
91-395	LG 493	X	5
91-398	LG 488	X	6
91-399	LG 493	X	5
91-400	LG 488	X	6
91-401	LG 483	X	6
91-403	LG 488	X	10
91-404	LG 487	X	10
91-414	LG 405	X	10
91-415	LG 406	X	10
91-417	LG 500	X	10
91-430	LG 497	X	10
91-433	LG 498	X	6
91-435	LG 498	X	10
91-436	LG 498	X	6
91-438	LG 500	X	6
91-440	LG 408	X	6
91-442	LG 518	X	10
91-443	LG 489	X	10
91-444	LG 457	X	6
91-446	LG 491	X	6
91-447	LG 538	X	6
91-448	LG 482	X	6
91-449	LG 492	X	10
91-452	LG 497	X	6
91-453	LG 497	X	6
91-456	LG 502	X	6
91-457	LG 502	X	6
91-482	LG 434	X	10
91-489	LG 394	X	6
91-493	LG 500	X	6
91-496	LG 484	X	6
91-500	LG 416	X	6
91-501	LG 413	X	6
91-502	LG 477	X	10

N = New Item
F = NLA after inventories are sold

D = Discontinued after 2019 catalog
X = Active part number

OREGON	Page	Code	Pk.
91-503	LG 424	X	10
91-505	LG 477	X	6
91-506	LG 473	X	6
91-507	LG 415	X	6
91-508	LG 419	X	6
91-509	LG 424	X	6
91-515	LG 415	X	6
91-516	LG 457	X	6
91-517	LG 457	X	6
91-525	LG 477	X	6
91-526	LG 416	X	6
91-527	LG 479	X	6
91-528	LG 415	X	6
91-531	LG 393	X	6
91-532	LG 448	X	6
91-533	LG 394	X	10
91-534	LG 578	X	10
91-535	LG 448	X	6
91-536	LG 395	X	6
91-537	LG 578	X	10
91-538	LG 577	X	6
91-539	LG 393	X	6
91-544	LG 397	X	6
91-547	LG 449	X	10
91-557	LG 545	X	6
91-558	LG 448	X	6
91-573	LG 559	X	6
91-574	LG 559	X	10
91-584	LG 578	X	6
91-585	LG 493	X	6
91-586	LG 485	X	6
91-587	LG 490	X	6
91-588	LG 493	X	6
91-589	LG 482	X	6
91-590	LG 492	X	6
91-591	LG 481	X	6
91-592		X	6
91-593	LG 534	X	6
91-594	LG 534	N	6
91-596	LG 446	X	6
91-598	LG 583	X	6
91-604	LG 492	X	6
91-605	LG 544	X	6
91-606	LG 509	X	6
91-607	LG 544	X	6
91-608	LG 443	X	6
91-609	LG 469	X	6
91-610	LG 554	X	6
91-611	LG 527	X	6
91-613	LG 498	X	6
91-615	LG 522	X	6
91-616	LG 543	X	6
91-620	LG 470	X	6
91-621	LG 563	X	6
91-622	LG 536	X	6
91-623	LG 485	X	6
91-626	LG 552	X	6
91-627	LG 482	X	10
91-628	LG 387	X	6
91-635	LG 411	X	10
91-636	LG 535	X	6
91-637	LG 507	X	6
91-638	LG 426	X	6
91-701	LG 545	X	10
91-703	LG 541	X	6
91-705	LG 540	X	6
91-706	LG 550	X	10
91-713	LG 422	X	10
91-714	LG 543	X	6
91-715	LG 541	X	6
91-723	LG 508	X	10

OREGON	Page	Code	Pk.
91-731	LG 558	X	10
91-732	LG 559	X	10
91-761	LG 578	X	6
91-762	LG 578	X	6
91-764	LG 579	X	6
91-766	LG 579	X	6
91-767	LG 577	X	6
91-802	LG 560	X	6
91-804	LG 560	X	6
91-805	LG 560	X	10
91-806	LG 447	X	10
91-911	LG 576	X	10
91-912	LG 576	X	6
91-913	LG 576	X	6
91-917	LG 576	X	6
91-918	LG 576	X	6
91-919	LG 576	X	5
91-920	LG 576	X	6
91-938	LG 514	X	6
92-011	LG 490	X	6
92-013	LG 480	X	10
92-014	LG 481	X	6
92-015	LG 407	X	6
92-025	LG 440	X	10
92-026	LG 435	X	6
92-027	LG 432	X	6
92-028	LG 433	X	6
92-029	LG 435	X	6
92-030	LG 567	X	6
92-031	LG 433	X	6
92-033	LG 442	X	6
92-035	LG 537	X	6
92-036	LG 428	X	6
92-037	LG 423	X	6
92-038	LG 392	X	6
92-039	LG 470	X	6
92-040	LG 369	X	10
92-042	LG 472	X	6
92-044	LG 471	X	6
92-045	LG 474	X	6
92-047	LG 497	X	6
92-048	LG 498	X	6
92-049	LG 500	X	6
92-054	LG 434	X	6
92-057	LG 442	X	6
92-082	LG 433	X	6
92-084	LG 442	X	10
92-101	LG 458	X	5
92-102	LG 458	X	10
92-103	LG 487	X	6
92-104	LG 485	X	6
92-105	LG 485	X	6
92-109	LG 489	X	10
92-110	LG 491	X	6
92-113	LG 490	X	6
92-114	LG 493	X	5
92-115	LG 499	X	6
92-116	LG 500	X	6
92-118	LG 488	X	6
92-119	LG 492	X	6
92-120	LG 492	X	10
92-121	LG 499	X	6
92-122	LG 499	X	6
92-123	LG 499	X	6
92-124	LG 497	X	6
92-127	LG 498	X	6
92-128	LG 499	X	6
92-130	LG 499	X	6
92-132	LG 498	X	6
92-133	LG 382	X	6
92-134	LG 393	X	6

OREGON	Page	Code	Pk.
92-135	LG 392	X	6
92-137	LG 396	X	6
92-138	LG 396	X	6
92-139	LG 398	X	6
92-140	LG 516	X	6
92-141	LG 413	X	6
92-142	LG 413	X	6
92-144	LG 485	X	6
92-145	LG 535	X	6
92-146	LG 539	X	6
92-147	LG 559	X	6
92-149	LG 392	X	6
92-150	LG 395	X	6
92-151	LG 453	X	6
92-152	LG 455	X	6
92-153	LG 370	X	6
92-154	LG 396	N	6
92-157	LG 453	X	6
92-158	LG 453	X	6
92-159	LG 578	X	6
92-160	LG 395	X	6
92-161	LG 395	X	6
92-162	LG 397	X	6
92-163	LG 396	X	6
92-164	LG 583	X	6
92-165	LG 580	X	6
92-166	LG 397	N	6
92-167	LG 443	X	6
92-168	LG 572	X	6
92-169	LG 497	X	6
92-170	LG 502	X	6
92-171	LG 503	X	6
92-172	LG 502	X	6
92-173	LG 502	X	6
92-174	LG 502	X	6
92-175	LG 502	X	6
92-176	LG 576	X	6
92-177	LG 576	X	6
92-178	LG 397	N	6
92-179	LG 396	N	6
92-180	LG 395	N	6
92-181	LG 397	N	6
92-184	LG 500	N	6
92-207	LG 456	X	6
92-208	LG 472	X	6
92-209	LG 433	X	6
92-211	LG 471	X	6
92-212	LG 471	X	6
92-213	LG 473	X	6
92-217	LG 369	X	6
92-300	LG 382	X	6
92-301	LG 382	X	6
92-302	LG 382	X	6
92-415	LG 374	X	6
92-416	LG 456	X	6
92-417	LG 456	N	6
92-602	LG 455	X	6
92-607	LG 434	X	6
92-615	LG 491	X	10
92-616	LG 485	X	6
92-617	LG 487	X	5
92-675	LG 484	X	6
92-676	LG 491	X	6
92-737	LG 418	X	6
92-738	LG 472	X	6
92-739	LG 474	X	6
92-743	LG 418	X	6
92-910	LG 443	N	6
92-912	LG 436	N	6
92-913	LG 438	N	6
92-919	LG 435	N	6

N = New Item
F = NLA after inventories are sold

D = Discontinued after 2019 catalog
X = Active part number

2019 Numerical Index

OREGON	Page	Code	Pk.
92-921	LG 441	N	6
93-005	LG 447	X	6
93-006	LG 444	X	10
93-008	LG 510	X	10
93-009	LG 476	X	6
93-010	LG 432	X	6
93-011	LG 557	X	6
93-013	LG 480	X	10
93-025	LG 482	X	5
93-601	LG 432	X	10
933-FL	SFS 88	X	1
935-FL	SFS 88	X	1
937-FL	SFS 88	X	1
94-011	LG 572	X	6
94-017	LG 441	X	6
94-018	LG 565	X	6
94-019	LG 570	X	6
94-021	LG 573	X	6
94-022	LG 565	X	10
94-026	LG 369	X	10
94-029	LG 414	X	6
94-032	LG 568	X	6
94-038	LG 568	X	6
94-039	LG 561	X	10
94-040	LG 573	X	5
94-043	LG 568	X	6
94-045	LG 571	X	10
94-049	LG 573	X	6
94-051	LG 570	X	6
94-052	LG 573	X	10
94-053	LG 503	X	10
94-055	LG 480	X	6
94-059	LG 564	X	6
94-060	LG 438	X	6
94-061	LG 561	X	6
94-063	LG 564	X	6
94-064	LG 565	X	10
94-068	LG 441	X	6
94-069	LG 441	X	6
94-070	LG 438	X	6
94-071	LG 571	X	6
94-072	LG 568	X	6
94-073	LG 573	X	6
94-074	LG 571	X	6
94-075	LG 481	X	6
94-076	LG 571	X	6
94-077	LG 571	X	6
94-079	LG 568	X	6
94-085	LG 564	X	6
94-121	LG 534	N	6
94-122	LG 534	N	6
94-123	LG 534	N	6
94-124	LG 534	N	6
94-125	LG 563	N	6
94-126	LG 569	N	6
94-127	LG 569	X	6
94-128	LG 564	X	6
94-130	LG 569	N	6
94-131	LG 572	N	6
94-132	LG 566	N	6
94-133	LG 568	N	6
94-134	LG 572	N	6
94-135	LG 565	N	6
94-136	LG 572	N	6
94-138	LG 568	N	6
94-322	LG 520	X	6
94-602	LG 568	X	6
94-615	LG 370	X	10
94-618	LG 506	X	6
94-620	LG 414	X	10
94-621	LG 570	X	10

OREGON	Page	Code	Pk.
94-770	LG 569	X	10
95-006	LG 397	X	6
95-011		D	10
95-014	LG 374	X	6
95-015	LG 400	X	6
95-018	LG 399	X	10
95-023	LG 380	X	6
95-024	LG 465	X	6
95-026	LG 376	X	6
95-027	LG 398	X	10
95-031	LG 377	X	6
95-034	LG 377	X	6
95-036	LG 463	X	10
95-038	LG 523	X	6
95-041	LG 401	X	6
95-042	LG 468	X	6
95-044	LG 465	X	6
95-045	LG 374	X	10
95-047	LG 378	X	6
95-049	LG 459	X	6
95-050	LG 461	X	10
95-051	LG 465	X	6
95-052	LG 398	X	6
95-057	LG 380	X	6
95-058	LG 458	X	10
95-068	LG 376	X	6
95-071	LG 402	X	6
95-073	LG 533	X	6
95-074	LG 533	X	6
95-076	LG 404	X	6
95-077	LG 461	X	6
95-078	LG 496	X	6
95-080		X	6
95-082	LG 372	X	6
95-084	LG 494	X	6
95-085	LG 462	X	6
95-086	LG 425	X	6
95-087	LG 460	X	6
95-088	LG 458	X	6
95-092	LG 423	X	6
95-095	LG 463	N	6
95-099	LG 400	X	10
95-370	LG 373	X	6
95-601	LG 423	X	10
95-602	LG 403	X	10
95-605	LG 463	X	6
95-607	LG 397	X	6
95-609	LG 376	X	10
95-613	LG 463	X	6
95-614	LG 375	X	10
95-615	LG 426	X	10
95-621	LG 402	X	10
95-623	LG 466	N	6
96-005		D	10
96-040	LG 369	X	6
96-041	LG 372	X	6
96-047	LG 497	X	6
96-075	LG 571	X	6
96-129	LG 396	X	6
96-133	LG 422	X	6
96-215	LG 475	X	6
96-216	LG 475	X	6
96-300	LG 519	X	10
96-302	LG 470	X	6
96-303	LG 416	X	10
96-306	LG 538	X	6
96-308	LG 456	X	6
96-309	LG 488	X	10
96-310	LG 444	X	6
96-318	LG 414	X	6
96-319	LG 415	X	6

OREGON	Page	Code	Pk.
96-321	LG 436	X	6
96-322	LG 567	X	10
96-323	LG 477	X	6
96-324	LG 431	X	6
96-327	LG 417	X	10
96-328	LG 431	X	6
96-329	LG 449	X	6
96-332	LG 484	X	6
96-333	LG 408	X	6
96-340	LG 539	X	6
96-341	LG 446	X	6
96-343	LG 395	X	6
96-344	LG 536	X	6
96-346	LG 449	X	6
96-347	LG 387	X	6
96-349	LG 458	X	10
96-350	LG 412	X	10
96-351	LG 408	X	10
96-354	LG 484	X	10
96-362	LG 570	X	10
96-363	LG 499	X	6
96-364	LG 488	X	6
96-370	LG 533	X	6
96-372	LG 500	X	5
96-374	LG 560	X	6
96-381	LG 406	X	6
96-382	LG 564	X	10
96-387	LG 515	X	6
96-394	LG 538	X	10
96-395	LG 565	X	10
96-398	LG 525	X	6
96-401	LG 404	X	6
96-415	LG 456	X	6
96-600	LG 569	X	10
96-602	LG 572	X	6
96-603	LG 394	X	10
96-605	LG 394	X	6
96-607	LG 571	X	10
96-612	LG 499	X	6
96-615	LG 461	X	6
96-618	LG 483	X	6
96-620	LG 551	X	10
96-624	LG 447	X	6
96-628	LG 528	X	6
96-630	LG 556	X	6
96-631	LG 428	X	10
96-632	LG 559	X	6
96-633	LG 556	X	10
96-654	LG 511	X	6
96-660	LG 441	X	6
96-661	LG 535	X	6
96-677	LG 372	X	6
96-696	LG 481	X	5
96-697	LG 517	X	6
96-699	LG 442	X	6
96-701	LG 568	X	6
96-702	LG 491	X	6
96-705	LG 573	X	6
96-708	LG 571	X	10
96-724	LG 430	X	6
96-741	LG 573	X	5
96-748	LG 499	X	6
96-749	LG 433	X	6
96-778	LG 394	X	6
96-787	LG 500	X	6
96-795	LG 481	X	6
96-801	LG 479	X	6
96-802	LG 568	X	6
96-803	LG 567	X	6
96-808	LG 450	X	6
96-809	LG 505	X	6

N = New Item
F = NLA after inventories are sold

D = Discontinued after 2019 catalog
X = Active part number

OREGON	Page	Code	Pk.
96-810	LG 439	X	6
96-811	LG 489	X	6
96-900	LG 526	X	6
97-001	LG 527	X	6
97-003		D	10
97-004		D	10
97-005	LG 527	X	10
97-006	LG 525	X	10
97-008	LG 526	X	10
97-010	LG 524	X	6
97-012	LG 537	X	6
97-013	LG 526	X	10
97-014	LG 527	X	6
97-015	LG 527	X	6
97-016	LG 524	X	6
97-017	LG 537	X	10
97-018	LG 523	X	6
97-020	LG 526	X	10
97-021	LG 524	X	10
97-022	LG 524	X	10
97-024	LG 525	X	6
97-105	LG 523	X	6
97-107	LG 524	X	6
97-109	LG 525	X	10
97-110	LG 525	X	10
97-118	LG 524	X	10
97-119	LG 525	X	6
97-123	LG 537	X	10
97-330	LG 528	X	6
97-601	LG 527	X	10
97-604	LG 525	X	10
97-606	LG 522	X	10
98-001	LG 517	X	10
98-002	LG 401	X	10
98-005	LG 521	X	10
98-007	LG 401	X	6
98-019	LG 516	X	6
98-037	LG 574	X	10
98-044	LG 409	X	6
98-050	LG 521	X	6
98-051	LG 521	X	6
98-054	LG 574	X	10
98-056	LG 512	X	6
98-057	LG 513	X	6
98-061	LG 404	X	6
98-064-1	LG 514	X	6
98-065	LG 515	X	6
98-066	LG 409	X	6
98-067	LG 520	N	6
98-068	LG 389	X	6
98-069	LG 404	X	6
98-071	LG 411	X	6
98-072	LG 408	X	6
98-080	LG 512	X	6
98-081	LG 406	X	10
98-082	LG 513	X	10
98-083	LG 404	X	10
98-084	LG 512	X	10
98-085	LG 561	X	6
98-087	LG 407	X	6
98-088	LG 519	X	6
98-090	LG 519	X	10
98-091	LG 516	X	6
98-093	LG 411	X	6
98-094	LG 514	X	6
98-095	LG 521	N	6
98-096	LG 404	X	10
98-097	LG 514	X	6
98-098	LG 410	X	6
98-099	LG 412	N	6
98-102	LG 410	X	6

OREGON	Page	Code	Pk.
98-151	LG 516	N	6
98-152	LG 514	N	6
98-486	LG 512	X	10
98-487	LG 513	X	6
98-493	LG 409	X	6
98-496	LG 515	X	10
98-499	LG 519	X	6
98-537	LG 516	X	10
98-600	LG 85	D	6
98-628	LG 389	X	10
98-629	LG 412	X	6
98-631	LG 390	X	6
98-634	LG 405	X	10
98-637	LG 512	X	10
98-640	LG 574	X	10
98-670	LG 512	X	10
98-671	LG 514	X	10
98-672	LG 408	X	6
99-103	LG 551	X	6
99-107	LG 551	X	10
99-112	LG 556	X	10
99-113	LG 528	X	10
99-114	LG 555	X	10
99-117	LG 556	X	6
99-119	LG 489	X	6
99-121	LG 551	X	6
99-126	LG 501	X	10
99-127	LG 375	X	10
99-131	LG 555	X	6
99-132	LG 539	X	6
99-133	LG 542	X	10
99-134	LG 527	X	6
99-500	LG 535	X	6
99-501	LG 536	X	6
99-502	LG 536	X	6
99-614	LG 551	X	10
99-615	LG 552	X	10
99-617	LG 395	X	6
AR64511	SFS 98	X	1
F-15	SFS 87	X	1
F00-230	SFS 22	X	1
F00-231	SFS 22	X	1
F00-232	SFS 22	X	1
F00-283	SFS 5	X	1
F00-283-A	SFS 5	X	1
F00-284	SFS 5	X	1
F110054	SFS 93	X	12
F110078	SFS 93	X	12
F24200	SFS 96	X	1
F25219	SFS 91	X	1
F27100	SFS 96	X	12
F29208	SFS 95	X	1
F50002	SFS 97	X	10
F50004	SFS 97	X	8
F51020	SFS 97	X	1
F51050	SFS 97	X	1
F80022	SFS 95	X	1
F80050	SFS 96	X	1
F81158	SFS 95	X	1
F81160	SFS 96	X	1
F82180	SFS 95	X	1
F8265	SFS 97	X	6
F8276	SFS 97	X	6
FD-25	SFS 88	X	1
OEP-FOR-1	SFS 23	X	1
OILDRI	SFS 68	X	1
PI-47	SFS 90	X	1
PSTFLL	SFS 93	X	12
PSTFLS	SFS 94	X	12
SB1G	SFS 98	X	2
SF16	SFS 81	X	24

OREGON	Page	Code	Pk.
SL07	SFS 98	X	6
SL09	SFS 98	X	6
SL11	SFS 98	X	6
SPS8715		X	1
U2-11-S	SFS 88	X	1
U2-26-S	SFS 88	X	1
U2-51-S	SFS 88	X	1
UI-10-FS	SFS 86	X	1
UI-10-FSB	SFS 86	X	1
UI-10-FSY	SFS 86	X	1
UI-20-FS	SFS 86	X	1
UI-20-FSB	SFS 86	X	1
UI-20-FSG	SFS 86	X	1
UI-20-FSY	SFS 86	X	1
UI-25-FS	SFS 87	X	1
UI-25-FSB		X	1
UI-25-FSG	SFS 87	X	1
UI-25-FSY	SFS 87	X	1
UI-4-FS	SFS 86	X	1
UI-50-FS	SFS 87	X	1
UI-50-FSB	SFS 87	X	1
UI-50-FSG	SFS 87	X	1
UI-50-FSY	SFS 87	X	1
VP2805	SFS 85	X	9
VP2807		X	1
VP2815	SFS 85	X	9
VP2817		X	1
VP2825	SFS 85	X	9
VP2827		X	1
VP2835	SFS 85	X	6
VP2837		X	1
VP2855	SFS 85	X	8
VP2857		X	1
VP2865	SFS 85	X	8
VP2867		X	1
VP2901	SFS 83	X	48
VP2902		X	1
VP2903	SFS 83	X	24
VP2904		X	1
VP2905	SFS 83	X	12
VP2906		X	1
VP2911	SFS 83	X	12
VP2912		X	1
VP2913	SFS 83	X	12
VP2914		X	1
VP2921	SFS 83	X	12
VP2922		X	1
VP2931	SFS 84	X	12
VP2932		X	1
VP2933	SFS 84	X	4
VP2934		X	1
VP2941	SFS 84	X	2
VP2942		X	1
VP3051	SFS 81	X	1
VP348	SFS 81	X	1
VP3698		X	1
VP3756		X	1
VP6201	SFS 79	X	6
VP6202	SFS 79	X	1
VP6204	SFS 79	X	1
VP6205	SFS 79	X	8
VP6206	SFS 79	X	1
VP6208	SFS 79	X	1
VP6231	SFS 79	X	6
VP6232	SFS 79	X	1
VP6234	SFS 79	X	1
VP6235	SFS 79	X	8
VP6236	SFS 79	X	1
VP6238	SFS 79	X	1
VP6291	SFS 80	X	6
VP6292	SFS 80	X	1

N = New Item
F = NLA after inventories are sold

D = Discontinued after 2019 catalog
X = Active part number

2019 Numerical Index

OREGON	Page	Code	Pk.
VP6294	SFS 80	X	1
VP6295	SFS 80	X	8
VP6296	SFS 80	X	1
VP6298	SFS 80	X	1
VP6632	SFS 81	X	1
VP6635	SFS 81	X	8
VP6638	SFS 81	X	1
VP68111	SFS 80	X	6
VP6812	SFS 80	X	1
VP6814	SFS 80	X	1
VP6815	SFS 80	X	8
VP6816		X	1
VP6818	SFS 80	X	1
VP6832	SFS 81	X	1
VP6834	SFS 81	X	1
VP6835	SFS 81	X	8
VP6838	SFS 81	X	1
VP9437		X	1
VPM10011	SFS 85	X	4

OREGON	Page	Code	Pk.

OREGON	Page	Code	Pk.

N = New Item
F = NLA after inventories are sold

D = Discontinued after 2019 catalog
X = Active part number

120v Professional Series™, accessoires multiples sans fil . . . . . OPE 27–29
120v Professional Series™, batteries . . . . . OPE 36
120v Professional Series™, câble d'outils pour long manche . . . . . OPE 36
120v Professional Series™, chargeur C1600 . . . . . OPE 36
120v Professional Series™, coupe-bordure ST120VX . . . . . OPE 33
120v Professional Series™, outils et accessoires . . . . . OPE 30–37
120v Professional Series™, présentoir de point de vente . . . . . OPE 37
120v Professional Series™, sacs à dos de batteries. . . . . OPE 36
120v Professional Series™, souffleur dorsal BL120VX . . . . . OPE 32
120v Professional Series™, taille-bordures EG120VX . . . . . OPE 35
120v Professional Series™, taille-haie BHT120VX . . . . . OPE 34

A

Accessoires d'accélérateur de cyclomoteur . . . . . LG 722
Accessoires d'accélérateur, assortiment. . . . . SFS 101
Accessoires multiples sans fil, coupe-bordure ST600 . . . . . OPE 13
Accessoires multiples sans fil, rallonge EX600 . . . . . OPE 12
Accessoires multiples sans fil, scie à long manche PS600 . . . . . OPE 12
Accessoires multiples sans fil, taille-bordures EG600 . . . . . OPE 13
Accessoires multiples sans fil, taille-haie HT600 . . . . . OPE 13
Accessoires multiples sans fil, tête motorisée PH600 . . . . . OPE 12
Accessoires, affûteuses de chaîne coupante . . . . . SFS 40–41
Accessoires, meuleuses de lame de tondeuse à gazon . . . . . SFS 62
Adaptateur de volant, AYP . . . . . LG 939–940
Adaptateur de volant, Husqvarna . . . . . LG 939–940
Adaptateurs de lame, AYP . . . . . LG 340
Adaptateurs de lame, Bobcat . . . . . LG 340
Adaptateurs de lame, Husqvarna . . . . . LG 340
Adaptateurs de lame, MTD. . . . . LG 340–341
Adaptateurs de lame, Murray . . . . . LG 342
Adaptateurs de lame, Sears . . . . . LG 342
Adaptateurs de lame, Snapper . . . . . LG 342
Adaptateurs de lame, Walker . . . . . LG 342
ADAPTATEURS DE LAMES . . . . . LG 340–342
Adhésif frein-filet, Permatex . . . . . SFS 96
Aérosol, nettoyant pour freins. . . . . SFS 94
Aérosol, nettoyant, de borne de batterie . . . . . SFS 95
Aérosol, protecteur de borne de batterie. . . . . SFS 95
Affûteuse de chaîne coupante Electric Sure Sharp® 12 V . . . . . SFS 11
Affûteuses à chaîne de scies à chaîne . . . . . SFS 26–31
Affûteuses, de chaîne coupante. . . . . SFS 32–40
Affûteuses, de lames de tondeuses. . . . . SFS 58–63
Affûteuses, de lames de tondeuses à gazon . . . . . SFS 58–63
Agrafes de type E, assortiment . . . . . SFS 100
Agrafes de type R. . . . . LG 795
Allis Chalmers, applications de pignon . . . . . FOR 187
Allis-Chalmers, lames . . . . . LG 369
Alpina, applications de pignon. . . . . FOR 187
AMF, arbres . . . . . LG 869
AMF, bagues. . . . . LG 243
AMF, courroies . . . . . LG 259
AMF, poulies de tension . . . . . LG 824
AMF, roues . . . . . LG 1029–1046
AMF, roues/roulettes anti-bascule . . . . . LG 1037–1042
AMF, roulements . . . . . LG 243
Amorceurs . . . . . LG 629–632
Ampoules d'amorce Walbro . . . . . LG 631–632
Anneaux de retenue, assortiment. . . . . SFS 103
Applications de guide et chaîne, Chicago Electric . . . . . FOR 22
Applications de guide et chaîne, Corona Clipper. . . . . FOR 23
APPLICATIONS DU GUIDE-CHAÎNE ET DE LA CHAÎNE. . . . FOR 21–97
Arbre de direction . . . . . LG 940
Arbre de direction, AYP. . . . . LG 940
Arbre de direction, Husqvarna. . . . . LG 940
Arbre de direction, MTD . . . . . LG 940
Arbre, de direction . . . . . LG 940
Arbres à broche. . . . . LG 906–910
Arbres creux, lame . . . . . LG 869–910
Arbres de torsion creux . . . . . LG 906–910
Arbres, à broche . . . . . LG 906–910
Arbres, AMF. . . . . LG 869
Arbres, Ariens . . . . . LG 869
Arbres, AYP . . . . . LG 870–876
Arbres, Bobcat . . . . . LG 874–875
Arbres, Bunton . . . . . LG 874–875
Arbres, Bush Hog . . . . . LG 876–877
Arbres, Caroni . . . . . LG 877
Arbres, creux de torsion . . . . . LG 906–910
Arbres, Cub Cadet . . . . . LG 878–883
Arbres, Dixie Chopper . . . . . LG 883
Arbres, Dixon . . . . . LG 883–884
Arbres, Excel . . . . . LG 884
Arbres, Exmark . . . . . LG 884–889
Arbres, Ferris . . . . . LG 889
Arbres, Gilson. . . . . LG 891
Arbres, Grasshopper . . . . . LG 890
Arbres, Gravely . . . . . LG 890–891
Arbres, Great Dane . . . . . LG 891
Arbres, Husqvarna . . . . . LG 870–876
Arbres, Hustler . . . . . LG 884
Arbres, John Deere . . . . . LG 891–893
Arbres, Lame . . . . . LG 869–910
Arbres, Lawn Chief . . . . . LG 869
Arbres, MTD. . . . . LG 893–901
Arbres, Murray . . . . . LG 902
Arbres, Noma . . . . . LG 869
Arbres, Roper . . . . . LG 903–904
Arbres, Scag . . . . . LG 903
Arbres, Sears . . . . . LG 903–904
Arbres, Toro . . . . . LG 905
Arbres, Wright Stander. . . . . LG 905
Ardillons de carburant . . . . . LG 765
Ariens, arbres. . . . . LG 869
Ariens, bagues . . . . . LG 225–227
Ariens, barres de raclage pour souffleuse à neige . . . . . LG 847
Ariens, courroies . . . . . LG 264–266
Ariens, embrayages PDF électrique . . . . . LG 733–741
Ariens, filtres à air . . . . . LG 179
Ariens, interrupteur d'allumage. . . . . LG 942–945
Ariens, interrupteurs de prise de force . . . . . LG 946–947
Ariens, interrupteurs de sécurité . . . . . LG 947–948
Ariens, lames . . . . . LG 369–374
Ariens, lames de coupe-bordures universelles . . . . . LG 584
Ariens, manchons pour souffleuse à neige . . . . . LG 853–854
Ariens, patins pour souffleuse à neige . . . . . LG 850
Ariens, patins pour souffleuse à neige . . . . . LG 850
Ariens, roues anti-crevaison semi-pneumatiques . . . . . LG 1044–1046
Ariens, roulements à billes . . . . . LG 225–227
Ariens, roulements pour souffleuse à neige . . . . . LG 853–854
Ariens, vis de cisaillement pour souffleuse à neige . . . . . LG 852–853
Armoires de rangement de liquides inflammables . . . . . SFS 89–90
Armoires de reangement, liquides inflammables . . . . . SFS 89–90
Articles de lunetterie de sécurité . . . . . SFS 117–119
Articles de lunetterie de sécurité, présentoir . . . . . SFS 20
Articulations de direction . . . . . LG 939
Assortiment d'esses . . . . . LG 794
Assortiment d'esses . . . . . LG 794
Assortiment, accessoires de commande de puissance . . . . . SFS 101
Assortiment, agrafes de type E . . . . . SFS 100
Assortiment, bagues élastiques . . . . . SFS 103
Assortiment, boulons à épaulement . . . . . SFS 104–105
Assortiment, colliers de serrage de tuyau . . . . . SFS 104
Assortiment, épingles . . . . . SFS 100
Assortiment, esses. . . . . SFS 104
Assortiment, filtres à essence pour intérieur du réservoir . . . . . SFS 103
Assortiment, goupilles cylindriques . . . . . SFS 102
Assortiment, goupilles de dent de gouvernail . . . . . SFS 102
Assortiment, goupilles fendues . . . . . SFS 100
Assortiment, goupilles-ressorts . . . . . SFS 102
Assortiment, graisseurs . . . . . SFS 101
Assortiment, joints d'étanchéité, admission moteurs à 2 temps. . . . . SFS 103
Assortiment, joints toriques. . . . . SFS 102
Assortiment, raccords et connecteurs électriques . . . . . SFS 100
Assortiment, ressorts d'extension . . . . . SFS 104
Assortiment, ressorts de torsion . . . . . SFS 104
Assortiment, vis à tête hexagonale et écrous métriques . . . . . SFS 101
Assortiment, vis de jeu de douilles . . . . . SFS 101
Assortiments . . . . . SFS 100–104
Attaches auto-bloquantes en plastique . . . . . LG 723
Attaches de câble. . . . . LG 742
Axes à épaulement, emballage de présentation. . . . . LG 799
AYP, adaptateur de volant de direction . . . . . LG 939
AYP, adaptateurs de lame . . . . . LG 340
AYP, arbre de direction . . . . . LG 940
AYP, arbres . . . . . LG 870–876
AYP, articulations de direction. . . . . LG 939
AYP, bague de direction . . . . . LG 939–940
AYP, bagues . . . . . LG 227–228
AYP, câbles de commande . . . . . LG 701–703
AYP, courroies. . . . . LG 259–264
AYP, embrayages PDF électriques . . . . . LG 733–741

2019 Index Alphabétique – FR

AYP, interrupteurs d'allumage . . . . . LG 942–945
AYP, interrupteurs de prise de force . . . . . LG 946–947
AYP, interrupteurs de sécurité . . . . . LG 947–948
AYP, lames . . . . . LG 374–382
AYP, patins de souffleuse à neige . . . . . LG 850
AYP, pièces de suspension de tondeuse . . . . . LG 804
AYP, poulies d'entraînement . . . . . LG 834
AYP, poulies de tension . . . . . LG 824–825
AYP, roues . . . . . LG 1029–1046
AYP, roues/roulettes anti-bascule . . . . . LG 1037–1042
AYP, roulements à billes . . . . . LG 227–228
AYP, sangles de verrouillage de capot de tondeuse . . . . . LG 803
AYP, secteur denté de direction . . . . . LG 939–940
AYP, support d'arbre de direction . . . . . LG 939
AYP, tiges d'entraînement . . . . . LG 939

B

Bac de récupération à huile . . . . . SFS 67
Bac de récupération, huile . . . . . SFS 67
Bad Boy, courroies . . . . . LG 266–267
Bague de réservoir à essence . . . . . LG 767
Bague, compresseur . . . . . SFS 66
Bague, machines . . . . . SFS 106
Bagues - Exmark . . . . . LG 233-234
Bagues de machines . . . . . SFS 106
Bagues de piston, Briggs & Stratton . . . . . LG 750
Bagues de piston, compresseur . . . . . SFS 66
Bagues de piston, Honda . . . . . LG 754
Bagues de type E, emballage de présentation . . . . . LG 799
Bagues par type, tableau . . . . . LG 249
Bagues, AMF . . . . . LG 243
Bagues, Ariens . . . . . LG 225–227
Bagues, AYP . . . . . LG 227–228
Bagues, Bobcat . . . . . LG 228–230
Bagues, Briggs & Stratton . . . . . LG 750
Bagues, Bunton . . . . . LG 230
Bagues, Cub Cadet . . . . . LG 231-232
Bagues, EHP . . . . . LG 227–228
Bagues, Encore . . . . . LG 232
Bagues, Gravely . . . . . LG 235
Bagues, Honda . . . . . LG 754
Bagues, John Deere . . . . . LG 237–238
Bagues, K&S . . . . . LG 238
Bagues, MTD . . . . . LG 239–242
Bagues, Murray . . . . . LG 242–243
Bagues, Noma . . . . . LG 243
Bagues, Roper . . . . . LG 227–228
Bagues, sauterelle . . . . . LG 234–235
Bagues, Scag . . . . . LG 244
Bagues, Sears . . . . . LG 227–228
Bagues, Simplicity . . . . . LG 244–245
Bagues, Snapper . . . . . LG 245–246
Balais, démarreurs électriques . . . . . LG 927
Balancer, lame de tondeuses . . . . . SFS 63
Bande de frein, Scag . . . . . LG 698
Bande de frein, Snapper . . . . . LG 698
Barres d'attelage . . . . . LG 793
Barres de raclage, souffleuses à neige . . . . . LG 847–849
Batterie B425E . . . . . OPE 10
Batterie B600E . . . . . OPE 10
Batterie B650E . . . . . OPE 10
Batterie, blocs . . . . . OPE 10
Batterie, câbles . . . . . LG 744
Batterie, chargeur . . . . . LG 743
Batterie, chargeurs . . . . . OPE 10
Batterie, conducteur de borne . . . . . LG 743
Batterie, couvre-bornes . . . . . LG 743
Batterie, densimètre . . . . . LG 744
Batterie, extrémité de câble . . . . . LG 744
Batterie, isolateur de borne . . . . . LG 743
Batterie, pulvérisateur de nettoyant pour bornes . . . . . SFS 95
Batterie, pulvérisateur de protecteur pour bornes . . . . . SFS 95
Batterie, Tender . . . . . LG 743
Batterie, tenon de câble . . . . . LG 743
Batteries . . . . . LG 744
Batteries de remplacement . . . . . OPE 10
Batteries lithium-ion . . . . . OPE 10
Batteries, 120v Professional Series™ . . . . . OPE 36
Befco, lames . . . . . LG 382
Better Outdoors, lames . . . . . LG 383
Bidon à carburant pour le Canada seulement . . . . . SFS 90–91
Bidons à carburant . . . . . SFS 86–88
Bidons à carburant, Canada uniquement . . . . . SFS 90–91
Bidons de sécurité de déchets d'huile, polyéthylène . . . . . SFS 88
Bidons de sécurité, déchets huileux, polyéthylène . . . . . SFS 88
Bidons, carburant . . . . . SFS 86–88
Bielles, Briggs & Stratton . . . . . LG 750
Bielles, Honda . . . . . LG 755
Big Bee, lames . . . . . LG 384
Black & Decker, applications de guide et chaîne . . . . . FOR 22
Black & Decker, lames de coupe-bordures . . . . . LG 584
Bobcat, adaptateurs de lame . . . . . LG 340
Bobcat, arbres . . . . . LG 874–875
Bobcat, bagues . . . . . LG 228–230
Bobcat, câbles de commande . . . . . LG 703
Bobcat, courroies . . . . . LG 267–269
Bobcat, embrayages PDF électriques . . . . . LG 733–741
Bobcat, filtres de conduite de carburant . . . . . LG 774–776
Bobcat, interrupteurs de prise de force . . . . . LG 946–947
Bobcat, interrupteurs de sécurité . . . . . LG 947–948
Bobcat, joints à rotule . . . . . LG 938–939
Bobcat, lames . . . . . LG 384–388
Bobcat, poulies d'entraînement . . . . . LG 835
Bobcat, poulies de tension . . . . . LG 825–826
Bobcat, roues . . . . . LG 1029–1046
Bobcat, roues pneumatiques . . . . . LG 1044–1046
Bobcat, roues semi-pneumatiques anti-crevaison . . . . . LG 1044–1046
Bobcat, roues/roulettes anti-bascule . . . . . LG 1037–1042
Bobcat, roulements . . . . . LG 228–230
Bobines d'allumage . . . . . LG 784–787
Bobines d'allumage - Briggs & Stratton . . . . . LG 784–787
Bobines d'allumage, Honda . . . . . LG 784–787
Bobines d'allumage, Husqvarna . . . . . LG 784–787
Bobines d'allumage, Kohler . . . . . LG 784–787
Bobines d'allumage, Lawn Boy . . . . . LG 784–787
Bobines d'allumage, Robin . . . . . LG 784–787
Bobines d'allumage, Stihl . . . . . LG 784–787
Bobines d'allumage, Tecumseh . . . . . LG 784–787
Bobines de magnéto . . . . . LG 784–787
Bobines, allumage . . . . . LG 784–787
Bobines, magnéto . . . . . LG 784–787
Boîtes, bac de pièces . . . . . SFS 21
Boîtes, lames de tondeuse . . . . . SFS 21
Bolens, lames . . . . . LG 388–390
Bolens, roues/roulettes anti-bascule . . . . . LG 1037–1042
Bons d'entretien . . . . . SFS 21
Bons, entretien . . . . . SFS 21
Borne de batterie au plomb . . . . . LG 743
Bornes de bougie d'allumage . . . . . LG 787–788
Bornes électriques et connecteurs, assortiment . . . . . SFS 100
Bottes de foresterie en caoutchouc . . . . . SFS 113
Bottes en cuir de qualité supérieure . . . . . SFS 113
Bottes en cuir, qualité supérieure . . . . . SFS 113
Bottes, caoutchouc forestier . . . . . SFS 113
Bottes, cuir de qualité supérieure . . . . . SFS 113
Bouchon de remplissage d'huile, Briggs & Stratton . . . . . LG 750
Bouchon de remplissage d'huile, Honda . . . . . LG 756
Bouchons d'huile, scies à chaîne . . . . . LG 690
Bouchons de réservoir de carburant . . . . . LG 770–773
Bouchons de réservoir de carburant, Briggs & Stratton . . . . . LG 770
Bouchons de réservoir de carburant, Echo . . . . . LG 770–771
Bouchons de réservoir de carburant, Exmark . . . . . LG 771
Bouchons de réservoir de carburant, Homelite . . . . . LG 771
Bouchons de réservoir de carburant, Honda . . . . . LG 771
Bouchons de réservoir de carburant, Kawasaki . . . . . LG 772
Bouchons de réservoir de carburant, Maruyama . . . . . LG 772
Bouchons de réservoir de carburant, MTD . . . . . LG 772
Bouchons de réservoir de carburant, Scag . . . . . LG 772
Bouchons de réservoir de carburant, scies à chaîne . . . . . LG 690
Bouchons de réservoir de carburant, Shindaiwa . . . . . LG 772
Bouchons de réservoir de carburant, Stihl . . . . . LG 773
Bouchons de réservoir de carburant, Tanaka . . . . . LG 773
Bouchons de réservoir de carburant, Toro . . . . . LG 773
BOUGIE D'ALLUMAGE . . . . . LG 864–867
Boulons à épaulement, assortiment . . . . . SFS 104–105
Boulons autotaraudeurs . . . . . SFS 105
Boulons de lames . . . . . SFS 105
Boulons de moyeu . . . . . LG 910
Boulons de poignée . . . . . SFS 105
Boulons hexagonaux métriques et écrous, assortiment . . . . . SFS 101
Boulons, arbres . . . . . LG 910

Boulons, épaulement . . . SFS 105
Boulons, lame . . . SFS 105
Boulons, poignée . . . SFS 105
Bouton de conduit de câble d'accélérateur . . . LG 721
Boutons de poignée . . . LG 802
Boutons, poignée . . . LG 802
Bras de direction, MTD . . . LG 939
Bras de levage . . . LG 794
Bras de stabilisateur . . . LG 793
Briggs & Stratton, bagues . . . LG 750
Briggs & Stratton, bagues de piston . . . LG 750
Briggs & Stratton, balais de démarreur électrique . . . LG 927
Briggs & Stratton, bielles . . . LG 750
Briggs & Stratton, bielles . . . LG 750
Briggs & Stratton, bobines d'allumage . . . LG 784–787
Briggs & Stratton, bouchon de remplissage d'huile . . . LG 750
Briggs & Stratton, Bouchons de réservoir de carburant . . . LG 770
Briggs & Stratton, carburateurs . . . LG 596
Briggs & Stratton, cliquets et ressorts de démarreur . . . LG 930–931
Briggs & Stratton, cuves de carburateur . . . LG 625
Briggs & Stratton, dent de loup de manivelle de mise en marche . . . LG 929
Briggs & Stratton, diaphragmes de carburateur . . . LG 622–623
Briggs & Stratton, engrenages de démarreur électrique . . . LG 927–928
Briggs & Stratton, ensembles de joints statiques . . . LG 745
Briggs & Stratton, entraînements de démarreur électrique . . . LG 926–927
Briggs & Stratton, filtres à air en mousse . . . LG 185–189
Briggs & Stratton, filtres à air en papier . . . LG 179–185
Briggs & Stratton, filtres à huile . . . LG 814–819
Briggs & Stratton, filtres de conduite de carburant . . . LG 774–776
Briggs & Stratton, flotteurs de carburateur . . . LG 624
Briggs & Stratton, joints . . . LG 749
Briggs & Stratton, joints étanches à l'huile . . . LG 749
Briggs & Stratton, joints statiques . . . LG 745–749
Briggs & Stratton, lanceurs . . . LG 923
Briggs & Stratton, moteurs de démarreur . . . LG 915–916
Briggs & Stratton, plots et condensateur . . . LG 789
Briggs & Stratton, poigné de démarreur . . . LG 930
Briggs & Stratton, pointeaux d'admission de carburateur . . . LG 628
Briggs & Stratton, poires d'amorçage . . . LG 629–632
Briggs & Stratton, poulies de lanceur . . . LG 933
Briggs & Stratton, régulateurs de tension . . . LG 731
Briggs & Stratton, ressorts de lanceur . . . LG 927
Briggs & Stratton, silencieux . . . LG 806–807
Briggs & Stratton, tableau de référence rapide . . . LG 1048–1071
Briggs & Stratton, trousses de carburateur . . . LG 602–604
Bunton, arbres . . . LG 874–875
Bunton, bagues . . . LG 230
Bunton, courroies . . . LG 269–270
Bunton, embrayages PDF électriques . . . LG 733–741
Bunton, interrupteurs de prise de force . . . LG 946–947
Bunton, interrupteurs de sécurité . . . LG 947–948
Bunton, lames . . . LG 390–392
Bunton, poulies de tension . . . LG 826–827
Bunton, roues . . . LG 1029–1046
Bunton, roulements à billes . . . LG 230
Bush Hog, arbres . . . LG 876–877
Bush Hog, courroies . . . LG 270–271
Bush Hog, lames . . . LG 392–394
Butées de pivot de fil d'accélérateur . . . LG 722

C

Câble d'outils pour long manche, 120v Professional Series™ . . . OPE 36
Câbles d'accélérateur . . . LG 701–720
Câbles d'engagement de plateau de coupe . . . LG 701–720
Câbles d'étrangleur . . . LG 701–720
CÂBLES DE COMMANDE . . . LG 699–723
Câbles de commande à double effet . . . LG 720–721
Câbles de commande d'autopropulsion . . . LG 701–720
Câbles de commande d'entraînement . . . LG 701–720
Câbles de commande, AYP . . . LG 701–703
Câbles de commande, Bobcat . . . LG 703
Câbles de commande, Cub Cadet . . . LG 703–708
Câbles de commande, Dixie hacheur . . . LG 708
Câbles de commande, Excel . . . LG 708
Câbles de commande, Gravely . . . LG 708
Câbles de commande, Honda . . . LG 708–709
Câbles de commande, Hustler . . . LG 708
Câbles de commande, John Deere . . . LG 709
Câbles de commande, McClane . . . LG 709
Câbles de commande, MTD . . . LG 710–715
Câbles de commande, Murray . . . LG 715–717
Câbles de commande, pousser-tirer . . . LG 720–721
Câbles de commande, Scag . . . LG 717–718
Câbles de commande, Snapper . . . LG 718–719
Câbles de commande, Toro . . . LG 719–720
Câbles de commande, universels . . . LG 699–701
Câbles de commande, Wisconsin . . . LG 720
Câbles de frein . . . LG 701–720
Câbles de zone de sécurité . . . LG 701–720
Câbles PDF . . . LG 701–720
Câbles, batterie . . . LG 744
Câbles, commande . . . LG 701–720
Câbles, commande d'auto-propulsion . . . LG 701–720
Câbles, commande d'entraînement . . . LG 701–720
Câbles, commande de direction pour souffleuse à neige . . . LG 701–720
Câbles, commande de goulotte pour souffleuse à neige . . . LG 701–720
Câbles, commande de puissance . . . LG 701–720
Câbles, commande de vis sans fin pour souffleuse à neige . . . LG 701–720
Câbles, engagement de plateau . . . LG 701–720
Câbles, étrangleur . . . LG 701–720
Câbles, frein . . . LG 701–720
Câbles, prise de force . . . LG 701–720
Caisses-cellules de pièces . . . SFS 21
Came interne . . . LG 956–957
Carburant sans éthanol, Carburants VP . . . SFS 79–81
Carburants VP, carburant sans éthanol . . . SFS 79–81
Carburants VP, Fix-It FuelMC . . . SFS 81
Carburants VP, PowerSpout . . . SFS 81
Carburants VP, siphon . . . SFS 81
Carburateur, Briggs & Stratton . . . LG 596
Carburateur, Honda . . . LG 596–597
Carburateur, Robin . . . LG 596
Carburateur, Tecumseh . . . LG 598–601
Carburateur, Tillotson . . . LG 595
Carburateur, Walbro . . . LG 595
Carburateur, Yamakoyo . . . LG 601
Carburateur, Zama . . . LG 595
Carburateurs de remplacement complets . . . LG 595–601
CARBURATEURS ET PIÈCES DE CARBURATEURS . . . LG 594–674
Carburateurs Walbro . . . LG 595
Carburateurs, complets . . . LG 595–601
Carburateurs, cuves . . . LG 625
Caroni, arbres . . . LG 877
Caroni, lames . . . LG 395
Cartouches de graisse . . . SFS 12
Casque de sécurité . . . SFS 112
Casque, sécurité . . . SFS 112
Catalogue, Oregon® . . . SFS 23
Chaîne à rouleau, demi-maillons . . . LG 676
Chaîne à rouleau, maillons coudés . . . LG 676
Chaîne à rouleau, maillons de jonction . . . LG 676
Chaîne à rouleaux . . . LG 676
CHAÎNE COUPANTE . . . FOR 103–147
Chaîne coupante pour scie à long manche sans fil PS250 . . . OPE 25
Chaîne coupante, affûteuses de chaîne automatiques . . . SFS 32–40
Chaîne coupante, caractéristiques . . . FOR 108–109
Chaîne de scie à long manche . . . OPE 20
Chaîne PowerSharp® de rechange pour matériel de plein air motorisé . . . OPE 25
Chaîne, demi-maillons de rouleau . . . LG 676
Chaîne, maillons coudés de rouleau . . . LG 676
Chaîne, maillons de jonction de rouleau . . . LG 676
Chaîne, scie à chaîne . . . FOR 103–147
Chaînes de pneus . . . LG 965
Chaînes, pneu . . . LG 965
Chambre à air . . . LG 956–957
Chambres à air, pneus . . . LG 956–957
Chargeur C1600, 120v Professional Series™ . . . OPE 36
Chargeur de batterie C600 . . . OPE 10
Chargeur de batterie rapide . . . OPE 10
Chargeur de batterie rapide C750 . . . OPE 10
Chargeur, batterie . . . LG 743
Chasse-rivet d'établi pour chaîne coupante . . . SFS 43
Chausson en néoprène . . . SFS 113
Chausson, néoprène . . . SFS 113
Chevilles d'attelage . . . LG 795
Chevilles d'attelage . . . LG 795
Chevilles d'attelage, pliées . . . LG 796
Chevilles d'attelage, tête rouge . . . LG 796
Cinétique, fendeuse de bûches . . . OPE 44–45
Clavette droite, en barre . . . LG 727
Clavettes de sécurité . . . LG 795

2019 Index Alphabétique – FR

Clavettes Woodruff, emballage de présentation . . . LG 801
Clés d'allumage . . . LG 945–946
Clés de machines, emballage de présentation . . . LG 801
Clés de volant . . . LG 789
Clés, allumage . . . LG 945–946
Clés, démarreur . . . LG 945–946
Clés, volant . . . LG 790
Coin à 4 directions, fendeuses de bûches . . . OPE 47
Coins d'abattage . . . SFS 14
Coins, d'abattage . . . SFS 14
Colle Gorilla . . . SFS 97
Colle, Gorilla . . . SFS 97
Colliers d'arbre, emballage de présentation . . . LG 801
Colliers de serrage de tuyau . . . LG 765
Colliers de serrage de tuyau, assortiment . . . SFS 104
Colliers de serrage, tuyau . . . LG 765
Comet, courroies . . . LG 272
Compresseur de ressort de soupape . . . SFS 66
Compresseur, anneaux . . . SFS 66
Compresseur, ressort de soupape . . . SFS 66
Compteur d'heures . . . LG 741
Compteur, heures . . . LG 741
Conduit d'essence . . . LG 761–763
CONDUIT D'ESSENCE ET ACCESSOIRES . . . LG 761–780
Conduit d'essence, Oregon® . . . LG 761
Conduit d'essence, Tygon® . . . LG 761
Conduit extérieur de câble d'accélérateur, rouleau . . . LG 721
Conduit, carburant . . . LG 761–763
Conduits d'essence Tygon® . . . LG 761
Conduits d'essence, scies à chaîne . . . LG 688–690
Contacteurs d'interdiction . . . LG 947–948
Contacteurs-relais . . . LG 729
Coquille de pluie . . . SFS 115
CORDE DE DÉMARREUR . . . LG 937
Corde de démarreur manuel . . . LG 937
Corde, démarreur . . . LG 937
Country Clipper, courroies . . . LG 272
Country Clipper, lames . . . LG 395–397
Coupe-bordure ST120VX, 120v Professional Series™ . . . OPE 33
Coupe-bordure ST600, accessoires multiples sans fil . . . OPE 13
Coupe-bordure/Taille-bordure . . . OPE 19
Coupe-bordure/taille-bordure . . . OPE 19
Coupe-bordure/Taille-bordure, ST275 Oregon® 40 V MAX . . . OPE 19
Coupe, chaîne coupante . . . FOR 103–147
Courroie de taille-bordures, universel . . . LG 1027
Courroie universelle pour taille-bordures . . . LG 1027
COURROIES . . . LG 250–339
Courroies de cordon en aramide supérieures . . . LG 334–335
Courroies par grosseur, table . . . LG 250–258
Courroies tissées de polyester industrielles . . . LG 336–337
Courroies, AMF . . . LG 259
Courroies, Ariens . . . LG 264–266
Courroies, AYP . . . LG 259–264
Courroies, Bad Boy . . . LG 266–267
Courroies, Bobcat . . . LG 267–269
Courroies, Bunton . . . LG 269–270
Courroies, Bush Hog . . . LG 270–271
Courroies, Club Car . . . LG 272
Courroies, Comet . . . LG 272
Courroies, Country Clipper . . . LG 272
Courroies, Craftsman . . . LG 315
Courroies, Cub Cadet . . . LG 273–277
Courroies, Dixie Chopper . . . LG 277
Courroies, Dixon . . . LG 278
Courroies, Dynamark . . . LG 278
Courroies, E-Z Roll . . . LG 278
Courroies, Encore . . . LG 278
Courroies, Excel . . . LG 279
Courroies, Exmark . . . LG 279–283
Courroies, EZ-Go . . . LG 283
Courroies, Ferris . . . LG 283–284
Courroies, fil câblé d'aramide de qualité supérieure . . . LG 334–335
Courroies, fil câblé en polyester industriel . . . LG 336–337
Courroies, Grasshopper . . . LG 284–285
Courroies, Gravely . . . LG 285–287
Courroies, Great Dane . . . LG 287–288
Courroies, Honda . . . LG 288
Courroies, Husqvarna . . . LG 288–292
Courroies, Hustler . . . LG 279
Courroies, John Deere . . . LG 292–297
Courroies, Kees . . . LG 297
Courroies, King Kutter . . . LG 298
Courroies, Kubota . . . LG 298–299
Courroies, Lawn Boy . . . LG 299
Courroies, Lesco . . . LG 299
Courroies, Little Wonder . . . LG 300
Courroies, Manco . . . LG 300
Courroies, Massey Fergunson . . . LG 300
Courroies, McClane . . . LG 300
Courroies, MTD . . . LG 300–306
Courroies, Murray . . . LG 306–309
Courroies, Noma . . . LG 309–310
Courroies, Partner . . . LG 310
Courroies, Polaris ATV . . . LG 310
Courroies, Power Trim . . . LG 311
Courroies, Roper . . . LG 311–312
Courroies, Scag . . . LG 312–314
Courroies, scies à tronçonner . . . LG 684
Courroies, Scotts . . . LG 315
Courroies, Sears . . . LG 315
Courroies, Simplicity . . . LG 316
Courroies, Snapper . . . LG 316–319
Courroies, souffleuses à neige . . . LG 862–863
Courroies, Stihl . . . LG 320
Courroies, Toro . . . LG 320–323
Courroies, Troy-Bilt . . . LG 324
Courroies, Walker . . . LG 325
Courroies, Woods . . . LG 325–330
Courroies, Wright Stander . . . LG 330–331
Courroies, Yazoo . . . LG 297
CourroiesManco . . . LG 300
Couteau, fil pour coupe-bordure . . . LG 985
Couvercle de tondeuse autoportée . . . LG 803
Couvercle, borne de batterie . . . LG 743
Couvercle, tondeuse autoportée . . . LG 803
Couvercles, guides de scie à chaîne . . . SFS 13
Couvre-borne de bougie . . . LG 787–788
Craftsman, courroies . . . LG 315
Craftsman, lames . . . LG 397–404
Crayons de marquage . . . SFS 19
Crayons, marquage . . . SFS 19
Crics, supérieurs . . . LG 796–798
Crochet de présentoir, 5 po . . . SFS 20
CS1500, guide-chaîne . . . OPE 25
CS250, guide-chaîne . . . OPE 25
CS300, guide-chaîne . . . OPE 25
Cub Cadet, applications de guide et chaîne . . . FOR 25
Cub Cadet, applications de pignon . . . FOR 187
Cub Cadet, apprêt pour souffleuse à neige . . . LG 860
Cub Cadet, arbres . . . LG 878–883
Cub Cadet, bagues . . . LG 231-232
Cub Cadet, bagues pour souffleuse à neige . . . LG 854–855
Cub Cadet, bride de goulotte de souffleuse à neige . . . LG 855
Cub Cadet, câbles de commande . . . LG 703–708
Cub Cadet, câbles de commande pour souffleuse à neige . . . LG 856–859
Cub Cadet, came de verrouillage de l'embrayage de souffleuse à neige . . . LG 856
Cub Cadet, clé de contact de souffleuse à neige . . . LG 861
Cub Cadet, courroies . . . LG 273–277
Cub Cadet, déclencheur de commande de direction pour souffleuse à neige . . . LG 856
Cub Cadet, démarreurs 120 V pour souffleuse à neige . . . LG 861
Cub Cadet, démarreurs manuels pour souffleuse à neige . . . LG 860–861
Cub Cadet, embrayages à PDF électrique . . . LG 733–741
Cub Cadet, guide de câble d'inclinaison de goulotte de souffleuse à neige . . . LG 856
Cub Cadet, interrupteurs d'allumage . . . LG 942–945
Cub Cadet, interrupteurs de prise de force . . . LG 946–947
Cub Cadet, interrupteurs de sécurité . . . LG 947–948
Cub Cadet, lames . . . LG 404–412
Cub Cadet, plaque de verrouillage pour souffleuse à neige . . . LG 856
Cub Cadet, plaques de raclage pour souffleuse à neige . . . LG 848
Cub Cadet, poulies d'entraînement . . . LG 837
Cub Cadet, poulies de tension . . . LG 826–827
Cub Cadet, roue de souffleuse à neige . . . LG 856
Cub Cadet, roues/roulettes anti-bascule . . . LG 1037–1042
Cub Cadet, roulements . . . LG 231-232
Cub Cadet, roulements pour souffleuse à neige . . . LG 854–855
Cub Cadet, silencieux . . . LG 807
Cub Cadet, trousses de carburateur . . . LG 604–605
Cub Cadet, trousses de carburateur pour souffleuse à neige . . . LG 859
Cub Cadet, vis sans fin en bronze pour souffleuse à neige . . . LG 856
Cuve de filtre . . . LG 765
Cuve de sédimentation . . . LG 765
Cuves de carburateur . . . LG 625
Cuves de carburateur, Briggs & Stratton . . . LG 625
Cuves de carburateur, Honda . . . LG 625
Cuves de carburateur, Tecumseh . . . LG 625

D

Dayton, applications de pignon . . . FOR 187
Démarreur électrique, moteurs . . . LG 915–921
Démarreur électrique, pièces . . . LG 926–928
Démarreur, butée . . . LG 930–931
Démarreur, clés . . . LG 945–946
Démarreur, cliquets de retenue . . . LG 932
Démarreur, cliquets et ressorts . . . LG 930–931
Démarreur, cliquets et ressorts, Briggs & Stratton . . . LG 930–931
Démarreur, cliquets et ressorts, Echo . . . LG 930–931
Démarreur, cliquets et ressorts, Honda . . . LG 930–931
Démarreur, cliquets et ressorts, Stihl . . . LG 930–931
Démarreur, coupelles, Honda . . . LG 929
Démarreur, embrayage, Briggs & Stratton . . . LG 929
Démarreur, entraînements, démarreurs électriques . . . LG 926–928
Démarreur, interrupteurs . . . LG 942–945
Démarreur, moteurs . . . LG 915–921
Démarreur, moteurs, Briggs & Stratton . . . LG 915–916
Démarreur, moteurs, Honda . . . LG 918
Démarreur, moteurs, Kawasaki . . . LG 917–918
Démarreur, moteurs, Kohler . . . LG 918–919
Démarreur, moteurs, MTD . . . LG 921
Démarreur, moteurs, Onan . . . LG 921
Démarreur, moteurs, Tecumseh . . . LG 922
Démarreur, poignée, Briggs & Stratton . . . LG 929–930
Démarreur, poignée, Honda . . . LG 930
Démarreur, poignée, pour mitaine, souffleuse à neige . . . LG 851
Démarreur, poignée, Stihl . . . LG 931
Démarreur, poignée, Tecumseh . . . LG 931
Démarreur, poignées . . . LG 929–930
Démarreur, poulies, scies à chaîne . . . LG 692
Démarreur, ressorts, scies à chaîne . . . LG 693
Démarreur, solénoïdes . . . LG 729–730
Démarreur, trousses de réparation de cliquet . . . LG 932
Démarreur, vis centrales, Honda . . . LG 929
DÉMARREURS . . . LG 915–925
Démarreurs électriques, balais . . . LG 927
Démarreurs électriques, engrenages . . . LG 927–928
Démarreurs électriques, entraînements . . . LG 926–927
Démarreurs manuels . . . LG 922–925
Démarreurs manuels, Briggs & Stratton . . . LG 923
Démarreurs manuels, Honda . . . LG 922–923
Démarreurs manuels, Kawasaki . . . LG 924
Démarreurs manuels, Komatsu . . . LG 924
Démarreurs manuels, Mitsubishi . . . LG 924
Démarreurs manuels, MTD . . . LG 925
Démarreurs manuels, Robin . . . LG 925
Démarreurs manuels, Tecumseh . . . LG 922–925
Démarreurs, électrique . . . LG 915–921
Démarreurs, manuels . . . LG 922–925
Dent d'aérateur . . . LG 590
Dents de gouvernail, Troy-Bilt . . . LG 954
Dents, gouvernail . . . LG 954
Dérive-chaîne de chaîne coupante et riveteuse de nez de guide de scie à chaîne à usage intensif . . . SFS 45
Dérive-chaîne de poche pour chaîne coupante . . . SFS 47
Dérive-chaîne, chaîne coupante, de poche . . . SFS 47
Dérive-chaîne, d'établi chaîne coupante . . . SFS 43
DeWalt, applications de guide et chaîne . . . FOR 26
Diaphragmes de carburateur, Briggs & Stratton . . . LG 622–623
Diaphragmes de carburateur, Tecumseh . . . LG 623
Diaphragmes, carburateur . . . LG 622–623
Diodes . . . LG 741
Dispositif de protection, courroie . . . LG 802
Dispositifs d'arrêt, conduit d'essence . . . LG 766–767
Disque d'entraînement, souffleuse à neige . . . LG 851
Disques d'entraînement . . . LG 726
Dixie Chopper, arbres . . . LG 883
Dixie Chopper, câbles de commande . . . LG 708
Dixie Chopper, courroies . . . LG 277
Dixie Chopper, embrayages à PDF électrique . . . LG 733–741
Dixie Chopper, lames . . . LG 413–416
Dixie Chopper, poulies de tension . . . LG 827
Dixie Chopper, roues anti-crevaison semi-pneumatiques . . . LG 1044–1046
Dixon, arbres . . . LG 883–884
Dixon, courroies . . . LG 278
Dixon, lames . . . LG 416–428
Dixon, roues anti-crevaison semi-pneumatiques . . . LG 1044–1046
Dixon, roues pneumatiques . . . LG 1044–1046
Dixon, roulements . . . LG 232
Dolmar, applications de guide et chaîne . . . FOR 26–29
Dolmar, applications de pignon . . . FOR 187–188
Dolmar, ressorts de lanceur . . . LG 937
Dynamark, courroies . . . LG 278
Dynamow, lames . . . LG 430

E

E-Z Roll, courroies . . . LG 278
Earthquake, applications de guide et chaîne . . . FOR 29
Earthquake, lames de coupe-bordures . . . LG 584
Earthwise, applications de guide et chaîne . . . FOR 29–30
Échelle, chaîne coupante . . . SFS 47
Echo, applications de guide et chaîne . . . FOR 30–33
Echo, applications de pignon . . . FOR 188–189
Echo, Bouchons de réservoir de carburant . . . LG 770–771
Echo, cliquets et ressorts de démarreur . . . LG 930–931
Echo, filtres à air . . . LG 189–191
Echo, lames de coupe-bordures . . . LG 584
Echo, pièces de taille-bordures et de souffleur . . . LG 1016–1018
Echo, poulies de démarreur . . . LG 933
Echo, ressorts de démarreur . . . LG 937
Écouvillon de lubrification entre jante et pneumatique . . . SFS 68
Écouvillon, lubrifiant pour talon . . . SFS 68
Écrans de carburant du carburateur . . . LG 627
Écrous à rondelle dentée . . . SFS 105
Écrous de barre, scies à chaîne . . . LG 686
Écrous de moyeu . . . SFS 105
Écrous élastique en tôle . . . SFS 105
Écrous, à rondelle dentée . . . SFS 105
Écrous, de moyeu . . . SFS 105
Écrous, de moyeux . . . LG 910
Écrous, élastique en tôle . . . SFS 105
Écrous, guides de scie à chaîne . . . LG 686
Efco, applications de guide et chaîne . . . FOR 33–35
Efco, applications de pignon . . . FOR 189
Efco, filtres à air . . . LG 210
EHP Bagues . . . LG 227–228
EHP Roulements . . . LG 227–228
Emballage de présentation, assortiment de clavettes de machinerie . . . LG 801
Emballage de présentation, axes à épaulement . . . LG 799
Emballage de présentation, bagues de type E . . . LG 799
Emballage de présentation, clavettes de sécurité . . . LG 800
Emballage de présentation, clavettes Woodruff . . . LG 801
Emballage de présentation, collets d'arbre . . . LG 801
Emballage de présentation, épingles . . . LG 800
Emballage de présentation, goupilles à ressort . . . LG 801
Emballage de présentation, goupilles fendues . . . LG 799
Emballage de présentation, graisseurs . . . LG 800
Emballages de magasin, filtres à air . . . LG 178
Embouts d'accouplement . . . LG 938–939
Embrayage à prise de force . . . LG 733–741
Embrayage à prise de force électrique . . . LG 733–741
Embrayage de lame, électrique . . . LG 733–741
Embrayage, à prise de force électrique . . . LG 733–741
EMBRAYAGES CENTRIFUGES . . . LG 675
Enclume réglable . . . SFS 47
Enclume, réglable . . . SFS 47
Encore, bagues . . . LG 232
Encore, courroies . . . LG 278
Encore, embrayages à prise de force électrique . . . LG 733–741
Encore, embrayages à prise de force électrique . . . LG 733–741
Encore, lames . . . LG 431–434
Encore, roulements . . . LG 232
Enginaire, filtres à air en mousse . . . LG 203
Engrenages, démarreurs électriques . . . LG 927–928
Ensemble avec clé Allen en T . . . SFS 66
Ensemble chasse-goupille . . . SFS 68
Ensemble d'adaptateur de riveteuse, pas de 3/4 po . . . SFS 47
Ensemble de joints statiques, Kohler . . . LG 757
Ensemble de joints statiques, Tecumseh . . . LG 757
Ensemble engrenage de direction, Murray . . . LG 941
Ensemble scie à long manche et batterie . . . OPE 20
Ensemble taille-haie et batterie . . . OPE 21
Ensemble taille-haie et coupe-bordures avec batterie . . . OPE 19
Ensembles de joints statiques - Briggs & Stratton . . . LG 745
Ensembles de joints statiques, Honda . . . LG 751
Ensembles, carburateur remis en état . . . LG 602–621
Entretoises d'arbre . . . LG 910
Entretoises, arbres . . . LG 910

2019 Index Alphabétique – FR

Épingles, assortiment . . . . . SFS 100
Épingles, emballage de présentation . . . . . LG 800
ÉQUIPEMENT DE SÉCURITÉ . . . . . SFS 108–121
Esses . . . . . LG 803
Esses . . . . . LG 794
Esses, assortiment . . . . . SFS 104
Essieux porteurs, tondeuses à gazon . . . . . SFS 77–78
Essieux, MTD . . . . . LG 938
Étau de limage pour bûcherons . . . . . SFS 14
Étau, de limage pour bûcherons . . . . . SFS 14
Évents de circuit de carburant . . . . . LG 763–764
Everide, lames . . . . . LG 434
Excel, arbres . . . . . LG 884
Excel, câbles de commande . . . . . LG 708
Excel, courroies . . . . . LG 279
Excel, lames . . . . . LG 470–475
Excel, poulies de tension . . . . . LG 827
Exmark, arbres . . . . . LG 884–889
Exmark, bagues . . . . . LG 233-234
Exmark, Bouchons de réservoir de carburant . . . . . LG 771
Exmark, courroies . . . . . LG 279–283
Exmark, filtres à air . . . . . LG 191
Exmark, interrupteurs de prise de force . . . . . LG 946–947
Exmark, interrupteurs de sécurité . . . . . LG 947–948
Exmark, joints à rotule . . . . . LG 938–939
Exmark, lames . . . . . LG 434–443
Exmark, poulies d'entraînement . . . . . LG 836
Exmark, poulies de tension . . . . . LG 827–828
Exmark, roues anti-crevaison semi-pneumatiques . . . . . LG 1044–1046
Exmark, roues pneumatiques . . . . . LG 1044–1046
Exmark, roues/roulettes anti-bascule . . . . . LG 1037–1042
Exmark, roulements . . . . . LG 233-234
Extracteur d'engrenage . . . . . SFS 65
Extracteur d'huile . . . . . SFS 67
Extracteur de carburant . . . . . SFS 67
Extracteur de volant . . . . . SFS 65
Extracteur, carburant . . . . . SFS 67
Extracteur, huile . . . . . SFS 67
Extracteur, pignon . . . . . SFS 65
Extracteur, volant . . . . . SFS 65
EZ-Go, courroies . . . . . LG 283

F

Fairmont Hydraulic, applications de guide et chaîne . . . . . FOR 35–36
Fendeuse de bûches, 22 tonnes . . . . . OPE 39
Fendeuse de bûches, 28 tonnes . . . . . OPE 40
Fendeuse de bûches, 28 tonnes Extend Split™ . . . . . OPE 41
Fendeuse de bûches, 35 tonnes . . . . . OPE 42
Fendeuse de bûches, cinétique . . . . . OPE 44–45
Fendeuses de bûches . . . . . OPE 38–47
FENDEUSES DE BÛCHES . . . . . OPE 38–47
Fendeuses de bûches, coin à 4 directions . . . . . OPE 47
Ferris, arbres . . . . . LG 889
Ferris, courroies, ... LG 283–284
Ferris, lames . . . . . LG 443–446
Ferris, roues/roulettes anti-bascule . . . . . LG 1037–1042
Ferris, roulements . . . . . LG 234
Fil de coupe de taille-bordures sans fil ST275 . . . . . OPE 26
Fil de coupe de taille-bordures, Biotrim™ . . . . . LG 978
Fil de coupe de taille-bordures, coupeur . . . . . LG 985
Fil de coupe de taille-bordures, FlexiBlade™ . . . . . LG 984
Fil de coupe de taille-bordures, Gator® SpeedLoad™ . . . . . LG 973
Fil de coupe de taille-bordures, Gatorline™ longueurs précoupées . . . . . LG 983
Fil de coupe de taille-bordures, Platinum Gatorline™ . . . . . LG 979
Fil de coupe de taille-bordures, Red Round Gatorline™ . . . . . LG 983
Fil de coupe de taille-bordures, Round Gatorline™ . . . . . LG 981
Fil de coupe de taille-bordures, Round Magnum Gatorline™ . . . . . LG 980
Fil de coupe de taille-bordures, Square Gatorline™ . . . . . LG 981
Fil de coupe de taille-bordures, Square Magnum Gatorline™ . . . . . LG 980
Fil de coupe de taille-bordures, SuperTwist Magnum Gatorline™ . . . . . LG 979
Fil de coupe Gatorline en platine . . . . . OPE 27
Fil de coupe-bordures Gatorline pour ST275 . . . . . OPE 26
FIL ET TÊTE DE COUPE DE TAILLE-BORDURES . . . . . LG 966–1015
Fil intérieur de câble d'accélérateur, rouleau . . . . . LG 721
Fil primaire . . . . . LG 742
Fil, primaire . . . . . LG 742
Fils métalliques d'attache . . . . . LG 722
Filtre à carburant, de conduite . . . . . LG 774–776
Filtre à essence, intérieur du réservoir . . . . . LG 776–779
FILTRES À AIR . . . . . LG 178–222
Filtres à air, Ariens . . . . . LG 179
Filtres à air, Briggs & Stratton, mousse . . . . . LG 185–189
Filtres à air, Briggs & Stratton, papier . . . . . LG 179–185
Filtres à air, Echo . . . . . LG 189–191
Filtres à air, Efco . . . . . LG 210
Filtres à air, Enginaire . . . . . LG 203
Filtres à air, Exmark . . . . . LG 191
Filtres à air, Homelite . . . . . LG 191–192
Filtres à air, Honda, couvercle . . . . . LG 196
Filtres à air, Honda, mousse . . . . . LG 195–196
Filtres à air, Honda, papier . . . . . LG 192–194
Filtres à air, Husqvarna . . . . . LG 197–198
Filtres à air, Kawasaki, mousse . . . . . LG 201–203
Filtres à air, Kawasaki, papier . . . . . LG 198–201
Filtres à air, Kohler, mousse . . . . . LG 206–207
Filtres à air, Kohler, papier . . . . . LG 203–206
Filtres à air, Kubota . . . . . LG 208
Filtres à air, Lawn-Boy . . . . . LG 209
Filtres à air, Maruyama . . . . . LG 209
Filtres à air, McCulloch . . . . . LG 209
Filtres à air, Mitsubishi . . . . . LG 210
Filtres à air, MTD . . . . . LG 210
Filtres à air, Oleo-Mac . . . . . LG 210
Filtres à air, Onan . . . . . LG 211
Filtres à air, paquets pour atelier . . . . . LG 178
Filtres à air, Partner . . . . . LG 211
Filtres à air, Poulan . . . . . LG 211–212
Filtres à air, RedMax . . . . . LG 212
Filtres à air, scies à chaîne . . . . . LG 678–684
Filtres à air, scies à tronçonner . . . . . LG 678–684
Filtres à air, Shindaiwa . . . . . LG 212–213
Filtres à air, Stihl . . . . . LG 213–216
Filtres à air, Tecumseh, mousse . . . . . LG 219
Filtres à air, Tecumseh, papier . . . . . LG 216–218
Filtres à air, Toro . . . . . LG 219–220
Filtres à air, Wheel Horse . . . . . LG 220
Filtres à air, Wisconsin . . . . . LG 220
Filtres à air, Wisconsin Robin . . . . . LG 220–222
Filtres à carburant . . . . . LG 627
Filtres à carburant, de type à cuvette . . . . . LG 765
Filtres à carburant, scies à chaîne . . . . . LG 691–692
Filtres à essence pour intérieur du réservoir . . . . . LG 776–779
Filtres à essence pour intérieur du réservoir, assortiment . . . . . SFS 103
FILTRES À HUILE . . . . . LG 814–819
Filtres à huile hydraulique . . . . . LG 819
Filtres à huile, Briggs & Stratton . . . . . LG 814–819
Filtres à huile, Generac . . . . . LG 814–819
Filtres à huile, Honda . . . . . LG 814–819
Filtres à huile, Kawasaki . . . . . LG 814–819
Filtres à huile, Kohler . . . . . LG 814–819
Filtres à huile, Tecumseh . . . . . LG 814–819
Filtres de conduite de carburant, Bobcat . . . . . LG 774–776
Filtres de conduite de carburant, Briggs & Stratton . . . . . LG 774–776
Filtres de conduite de carburant, John Deere . . . . . LG 774–776
Filtres de conduite de carburant, Kawasaki . . . . . LG 774–776
Filtres de conduite de carburant, Kohler . . . . . LG 774–776
Filtres de conduite de carburant, Kubota . . . . . LG 774–776
Filtres de conduite de carburant, Scag . . . . . LG 774–776
Filtres de conduite de carburant, Snapper . . . . . LG 774–776
Filtres de conduite de carburant, Tecumseh . . . . . LG 774–776
Filtres de conduite de carburant, Toro . . . . . LG 774–776
Filtres, air . . . . . LG 178-222
Filtres, de conduite de carburant . . . . . LG 774–776
Filtres, huile . . . . . LG 814–819
Filtres, huile hydraulique . . . . . LG 819
Fix-It Fuel, carburants VP . . . . . SFS 81
Flotteurs de carburateur . . . . . LG 624–625
Flotteurs de carburateur, Briggs & Stratton . . . . . LG 624
Flotteurs de carburateur, Honda . . . . . LG 624
Flotteurs de carburateur, Oregon® . . . . . LG 624–625
Flotteurs de carburateur, Tecumseh . . . . . LG 625
Flotteurs, carburateurs . . . . . LG 624–625
Ford/New Holland, lames . . . . . LG 447
Fourche ajustable . . . . . LG 805
Fourche, réglables . . . . . LG 805
FOURNITURES UTILISÉES SUR LE TERRAIN . . . . . SFS 72–107
Frein, lame . . . . . LG 802
Frontier, applications de pignon . . . . . FOR 189
Fusibles . . . . . LG 742

G

Gants. . . . SFS 116
Gator® SpeedLoad™ Fil de coupe-bordure de rechange . . . LG 973
Gator® SpeedLoad™ Pièces de rechange . . . LG 973
Gator® SpeedLoad™ Tableau d'application . . . LG 974–978
Gator® SpeedLoad™ Tête de coupe. . . . LG 968–978
Generac, filtres à huile . . . LG 814–819
Giant Vac, lames . . . LG 447–448
Gilson, arbres. . . . LG 891
Gonfleur Aerosal avec tuyau souple . . . SFS 94
Gonfleur de pneus, aérosol avec tuyau. . . . SFS 94
Gonfleur de positionneur de talon, Oregon® . . . SFS 70
Goodall, lames . . . LG 390–392
Goupille fendue, assortiment . . . SFS 100
Goupilles cylindriques, assortiment . . . SFS 102
Goupilles de cisaillement du volant. . . . LG 789
Goupilles de cisaillement, volant . . . LG 790
Goupilles de dent de gouvernail, assortiment . . . SFS 102
Goupilles de verrouillage, emballage de présentation . . . LG 800
Goupilles élastiques, assortiment . . . SFS 102
Goupilles élastiques, emballage de présentation . . . LG 801
Goupilles fendues, emballage de présentation . . . LG 799
Graisse "0" . . . LG 728
Graisse "00". . . . LG 728
Graisse haute température, cartouche de 14 oz . . . SFS 92
Graisse, haute température, cartouche de 14 oz. . . . SFS 92
Graisseurs, assortiment . . . SFS 101
Graisseurs, emballage de présentation . . . LG 800
Grasshopper, arbres . . . LG 890
Grasshopper, bagues. . . . LG 234–235
Grasshopper, courroies . . . LG 284–285
Grasshopper, embrayages à prise de force électrique . . . LG 733–741
Grasshopper, interrupteurs de prise de force . . . LG 946–947
Grasshopper, interrupteurs de sécurité . . . LG 947–948
Grasshopper, lames . . . LG 448–450
Grasshopper, poulies de tension . . . LG 828
Grasshopper, roues pneumatiques . . . LG 1044–1046
Grasshopper, roues/roulettes anti-bascule . . . LG 1037–1042
Grasshopper, roulements . . . LG 234–235
Gravely, arbres . . . LG 890–891
Gravely, bagues. . . . LG 235
Gravely, câbles de commande. . . . LG 708
Gravely, courroies . . . LG 285–287
Gravely, embrayages à prise de force électrique . . . LG 733–741
Gravely, interrupteurs de prise de force . . . LG 946–947
Gravely, interrupteurs de sécurité . . . LG 947–948
Gravely, lames . . . LG 450–456
Gravely, roues anti-crevaison semi-pneumatiques . . . LG 1044–1046
Gravely, roues/roulettes anti-bascule . . . LG 1037–1042
Gravely, roulements . . . LG 235
Gravely, silencieux . . . LG 807
Great Dane, arbres . . . LG 891
Great Dane, courroies . . . LG 287–288
Great Dane, courroies . . . LG 456–457
Great Dane, embrayages à prise de force électrique . . . LG 733–741
Green Machine, poulies de démarreur manuel. . . . LG 936
Green Machine, ressorts de démarreur manuel . . . LG 937
Greenworks, applications de guide et chaîne . . . FOR 36–37
Guide de limage monté sur le guide-chaîne professionnel, chaîne coupante. . . . SFS 11
Guide de lime, chaîne coupante . . . SFS 9
GUIDE-CHAÎNE – Montage de scie . . . **FOR 171–177**
GUIDE-CHAÎNES . . . FOR 148–179
Guide-chaînes , système de numéros de pièce . . . FOR 152–153
Guide-chaînes, familles de guide-chaînes Oregon® . . . FOR 150–169
Guides-chaînes de rechange pour matériel de plein air motorisé . . . OPE 25
Guides-chaînes pour matériel de plein air motorisé . . . OPE 25

H

Harnais de taille-bordures, universel . . . LG 1027
Harnais universel pour taille-bordures. . . . LG 1027
Hitachi, applications de guide et chaîne . . . FOR 37–38
Hoffco, ressorts de démarreur manuel. . . . LG 937
Homelite, applications de guide et chaîne . . . FOR 38–40
Homelite, applications de pignon . . . FOR 189–190
Homelite, bouchons de réservoir de carburant . . . LG 771
Homelite, filtres à air. . . . LG 191–192
Homelite, lames de coupe-bordures . . . LG 584
Homelite, pièces de taille-bordures et de souffleur. . . . LG 1019
Homelite, poulies de démarreur manuel . . . LG 934
Homelite, ressorts de démarreur manuel . . . LG 937
Homelite, trousse de carburateur. . . . LG 605
Honda, à tête longue . . . LG 755
Honda, bagues . . . LG 754
Honda, bagues de piston. . . . LG 754
Honda, barres de raclage pour souffleuse à neige . . . LG 847
Honda, bielles. . . . LG 755
Honda, bobines d'allumage . . . LG 784–787
Honda, bouchon de remplissage d'huile . . . LG 756
Honda, bouchons de réservoir de carburant . . . LG 771
Honda, boutons d'arrêt d'urgence. . . . LG 949
Honda, câbles de commande . . . LG 708–709
Honda, carburateurs . . . LG 596–597
Honda, cliquets et ressorts de démarreur . . . LG 930–931
Honda, coupelles de démarreur. . . . LG 929
Honda, courroies . . . LG 288
Honda, couvercle de filtre à air . . . LG 196
Honda, cuves de carburateurs. . . . LG 625
Honda, démarreurs manuels . . . LG 922–923
Honda, ensembles de joints statiques . . . LG 751
Honda, filtres à air en mousse. . . . LG 195–196
Honda, filtres à air en papier. . . . LG 192–194
Honda, filtres à huile . . . LG 814–819
Honda, flotteurs de carburateurs . . . LG 624
Honda, interrupteurs de capteur d'huile . . . LG 950
Honda, interrupteurs marche-arrêt. . . . LG 949
Honda, isolateur de carburateur . . . LG 601
Honda, jauge . . . LG 756
Honda, joints étanches. . . . LG 756
Honda, joints étanches à l'huile . . . LG 756
Honda, joints statiques. . . . LG 751–753
Honda, lames . . . LG 457–458
Honda, moteurs de démarreur . . . LG 918
Honda, pales pour souffleuse à neige . . . LG 846
Honda, patins pour souffleuse à neige . . . LG 850
Honda, piston . . . LG 754
Honda, poignée de démarreur. . . . LG 930
Honda, pointeaux d'admission du carburateur. . . . LG 628–629
Honda, poulies de démarreur manuel . . . LG 934
Honda, réservoirs à essence . . . LG 770
Honda, ressorts de démarreur manuel. . . . LG 937
Honda, roues . . . LG 1029–1046
Honda, roulements . . . LG 235
Honda, silencieux. . . . LG 807–808
Honda, soupapes d'admission. . . . LG 755
Honda, soupapes d'échappement . . . LG 755
Honda, tiges. . . . LG 755
Honda, trousses de carburateur . . . LG 605
Honda, tuyau d'échappement . . . LG 807–808
Honda, vis centrale de démarreur. . . . LG 929
Honda, vis de cisaillement pour souffleuse à neige . . . LG 852–853
Hose & Grommet, trousses de circuit de carburant . . . LG 764–765
HT250 Taille-haie, électrique sans fil. . . . OPE 21
Huile absorbante, Dri. . . . SFS 68
Huile hydraulique, anti-usure SP . . . SFS 84
Huile moteur, 2 temps . . . SFS 82
Huile, 2 temps. . . . SFS 82
Huile, guide et chaîne de scie à chaîne . . . SFS 19
Huile, hydraulique, anti-usure SP. . . . SFS 84
Huile, Only ONe™ moteur à 2 temps . . . SFS 19
Huile, outil pneumatique . . . SFS 83
Huile, synthétique 2 temps, carburants VP. . . . SFS 83
Huile, synthétique 2 temps, carburants VP. . . . SFS 83
Huskee, lames . . . LG 458
Husqvarna, adaptateur de volant . . . LG 939
Husqvarna, adaptateurs de lame . . . LG 340
Husqvarna, applications de guide et chaîne . . . FOR 40–47
Husqvarna, applications de pignon . . . FOR 190–193
Husqvarna, arbre de direction. . . . LG 940
Husqvarna, arbres . . . LG 870–876
Husqvarna, articulations de direction . . . LG 939
Husqvarna, bague de direction . . . LG 941
Husqvarna, bobines d'allumage. . . . LG 784–787
Husqvarna, courroies . . . LG 288–292
Husqvarna, embrayages à prise de force électrique . . . LG 733–741
Husqvarna, filtres à air. . . . LG 197–198
Husqvarna, interrupteurs d'arrêt d'urgence . . . LG 949
Husqvarna, interrupteurs d'allumage . . . LG 942–945
Husqvarna, interrupteurs marche-arrêt . . . LG 949
Husqvarna, lames . . . LG 458–470

2019 Index Alphabétique – FR

Husqvarna, lames de coupe-bordures . . . . . LG 585
Husqvarna, pièces de taille-bordures et de souffleur. . . . . LG 1020
Husqvarna, poulies de démarreur manuel . . . . . LG 934
Husqvarna, ressorts de démarreur manuel . . . . . LG 937
Husqvarna, roues. . . . . LG 1029–1046
Husqvarna, secteur denté de direction . . . . . LG 941
Husqvarna, support d'arbre de direction . . . . . LG 939
Husqvarna, tige d'entraînement. . . . . LG 939
Husqvarna, vis de cisaillement pour souffleuse à neige . . . . . LG 852–853
Hustler, arbres . . . . . LG 884
Hustler, câbles de commande . . . . . LG 708
Hustler, courroies . . . . . LG 279
Hustler, embrayages à prise de force électrique . . . . . LG 733–741
Hustler, lames . . . . . LG 470–475
Hustler, poulies de tension. . . . . LG 827
Hustler, roulements . . . . . LG 236
Hydromètre, batterie . . . . . LG 744

I

Ingersoll, lames . . . . . LG 475
Interrupteur, marche-arrêt . . . . . LG 949
INTERRUPTEURS. . . . . LG 942–950
Interrupteurs d'allumage, Cub Cadet . . . . . LG 942–945
Interrupteurs d'allumage, John Deere . . . . . LG 942–945
Interrupteurs d'allumage . . . . . LG 942–945
Interrupteurs d'allumage, Ariens . . . . . LG 942–945
Interrupteurs d'allumage, AYP. . . . . LG 942–945
Interrupteurs d'allumage, Husqvarna . . . . . LG 942–945
Interrupteurs d'allumage, Kohler . . . . . LG 942–945
Interrupteurs d'allumage, MTD . . . . . LG 942–945
Interrupteurs d'allumage, Murray. . . . . LG 942–945
Interrupteurs d'allumage, Snapper . . . . . LG 942–945
Interrupteurs de capteur d'huile, Honda . . . . . LG 950
Interrupteurs de sécurité . . . . . LG 947–948
Interrupteurs marche-arrêt . . . . . LG 949
Interrupteurs PDF . . . . . LG 946–947
Interrupteurs, allumage . . . . . LG 942–945
Interrupteurs, arrêt. . . . . LG 949
Interrupteurs, démarreur . . . . . LG 942–945
Interrupteurs, interdiction . . . . . LG 947–948
Interrupteurs, PDF . . . . . LG 946–947
Interrupteurs, sécurité . . . . . LG 947–948
Isolateur, borne de batterie . . . . . LG 743
Isolateur, carburateur Honda . . . . . LG 601

J

J-B Weld. . . . . SFS 97
Jacobsen, barres de raclage pour souffleuse à neige. . . . . LG 848
Jacobsen, lames . . . . . LG 476–482
Jacobsen, lames de coupe-bordures. . . . . LG 585
Jacobsen, roulements . . . . . LG 226–237
Jacobsen, vis de cisaillement pour souffleuse à neige . . . . . LG 852–853
Jambières-tablier . . . . . SFS 114
Jambières-tablier . . . . . SFS 114
Jambières-tablier enveloppant . . . . . SFS 114
Jauge d'épaisseur . . . . . SFS 65
Jauge graduée, Honda . . . . . LG 756
Jauge, d'épaisseur . . . . . SFS 65
Jeu d'adaptateurs, riveteuse pas de 3/4 po . . . . . SFS 47
Jeu de clés Allen, poignée en T . . . . . SFS 66
Jeu de poinçons, goupille cylindrique . . . . . SFS 67
John Deere, applications de guide et chaîne . . . . . FOR 47–49
John Deere, applications de pignon. . . . . FOR 194
John Deere, arbres . . . . . LG 891–893
John Deere, bagues . . . . . LG 237–238
John Deere, bagues pour souffleuse à neige. . . . . LG 854
John Deere, barres de raclage pour souffleuse à neige. . . . . LG 847–848
John Deere, câbles de commande . . . . . LG 709
John Deere, courroies . . . . . LG 292–297
John Deere, embrayages à prise de force électrique . . . . . LG 733–741
John Deere, filtres de conduite de carburant. . . . . LG 774–776
John Deere, interrupteurs d'allumage . . . . . LG 942–945
John Deere, interrupteurs de prise de force . . . . . LG 946–947
John Deere, interrupteurs de sécurité . . . . . LG 947–948
John Deere, joints à rotule . . . . . LG 938–939
John Deere, lames . . . . . LG 482–493
John Deere, lames de coupe-bordures . . . . . LG 585
John Deere, patins pour souffleuse à neige . . . . . LG 850
John Deere, poulies de tension . . . . . LG 829–831
John Deere, régulateurs de tension. . . . . LG 731–732
John Deere, roues . . . . . LG 1029–1046
John Deere, roues anti-crevaison semi-pneumatiques. . . . . LG 1044–1046
John Deere, roues/roulettes anti-bascule . . . . . LG 1037–1042
John Deere, roulements . . . . . LG 237–238
John Deere, roulements pour souffleuse à neige . . . . . LG 854
John Deere, vis de cisaillement pour souffleuse à neige . . . . . LG 852–853
Joint d'admission, moteurs 2 temps . . . . . LG 621
Joint d'étanchéité, Troy-Bilt . . . . . LG 954
Joint étanche à l'huile, Tecumseh. . . . . LG 759
Joint étanchéité à l'huile, Troy-Bilt . . . . . LG 954
Joint racleur. . . . . LG 760
Joint statique de cuve de carburateur . . . . . LG 626–627
Joint statique de cuve de carburateur, Honda . . . . . LG 626–627
Joint statique de cuve de carburateur, Lawn-Boy . . . . . LG 626–627
Joint statique de cuve de carburateur, Oregon® . . . . . LG 626–627
Joint statique de cuve de carburateur, Walbro. . . . . LG 627
Joint statique, Kohler . . . . . LG 757
Joint statique, Tecumseh . . . . . LG 758–759
Joints à rotule. . . . . LG 938–939
Joints d'arbre . . . . . LG 910
Joints d'étanchéité, arbres. . . . . LG 910
Joints d'étanchéité, Briggs & Stratton . . . . . LG 749
Joints d'étanchéité, Honda. . . . . LG 756
Joints étanches à l'huile, Briggs & Stratton . . . . . LG 749
Joints étanches à l'huile, Honda. . . . . LG 756
Joints statiques de cuve . . . . . LG 626–627
Joints statiques de cuve de carburateur, Briggs & Stratton . . . . . LG 627
Joints statiques de cuve, Briggs & Stratton . . . . . LG 627
Joints statiques de cuve, Honda. . . . . LG 626–627
Joints statiques de cuve, Lawn-Boy . . . . . LG 626–627
Joints statiques de cuve, Oregon® . . . . . LG 626–627
Joints statiques de cuve, Walbro . . . . . LG 627
Joints statiques, Briggs & Stratton . . . . . LG 745–749
Joints statiques, d'admission moteur 2 temps. . . . . LG 621
Joints statiques, d'admission moteur 2 temps assortiment . . . . . SFS 103
Joints statiques, Honda . . . . . LG 751–753
Joints toriques, assortiment . . . . . SFS 102
Jonsered, applications de guide et chaîne . . . . . FOR 50–55
Jonsered, applications de pignon . . . . . FOR 194–195
Jonsered, ressorts de démarreur manuel . . . . . LG 937

K

K&S, bagues. . . . . LG 238
K&S, roulements . . . . . LG 238
Kawasaki, bouchons de réservoir de carburant . . . . . LG 772
Kawasaki, filtres à air, mousse . . . . . LG 201–203
Kawasaki, filtres à air, papier . . . . . LG 198–201
Kawasaki, filtres à huile . . . . . LG 814–819
Kawasaki, filtres de conduite de carburant . . . . . LG 774–776
Kawasaki, lames de coupe-bordures. . . . . LG 585
Kawasaki, lanceurs . . . . . LG 924
Kawasaki, moteurs de démarreur . . . . . LG 917–918
Kawasaki, poires d'amorçage . . . . . LG 630
Kawasaki, poulies de démarreur manuel . . . . . LG 935
Kawasaki, régulateurs de tension . . . . . LG 732
Kawasaki, ressorts de démarreur manuel. . . . . LG 937
Kees, courroies . . . . . LG 297
Kees, lames. . . . . LG 494–497
King Kutter, courroies . . . . . LG 298
King Kutter, lames . . . . . LG 497
King Kutter, roues anti-crevaison semi-pneumatiques. . . . . LG 1044–1046
Kobalt, applications de guide et chaîne. . . . . FOR 55
Kohler, bobines d'allumage . . . . . LG 784–787
Kohler, engrenages de démarreur électrique . . . . . LG 928
Kohler, ensemble de joints statiques . . . . . LG 757
Kohler, filtres à air en mousse. . . . . LG 206–207
Kohler, filtres à air en papier . . . . . LG 203–206
Kohler, filtres à huile . . . . . LG 814–819
Kohler, filtres de conduite de carburant . . . . . LG 774–776
Kohler, interrupteurs d'allumage . . . . . LG 942–945
Kohler, joint statique . . . . . LG 757
Kohler, moteurs de démarreur . . . . . LG 918–919
Kohler, plots et condensateur . . . . . LG 789
Kohler, régulateurs de tension . . . . . LG 732

Kohler, ressorts de démarreur manuel . . . . . LG 937
Kohler, silencieux . . . . . LG 808–809
Kohler, trousses de carburateur . . . . . LG 605
Komatsu, démarreurs manuels . . . . . LG 924
Kubota, courroies . . . . . LG 298–299
Kubota, filtres à air . . . . . LG 208
Kubota, filtres de conduite de carburant . . . . . LG 774–776
Kubota, interrupteurs de prise de force . . . . . LG 946–947
Kubota, interrupteurs de sécurité . . . . . LG 947–948
Kubota, lames . . . . . LG 497–501
Kubota, roues/roulettes anti-bascule . . . . . LG 1037–1042

L

Lames - Billy Goat . . . . . LG 590
Lames - Redhawk . . . . . LG 534–535
Lames de binage . . . . . LG 368
LAMES DE COUPE-BORDURES . . . . . LG 584–590
Lames de coupe-bordures par longueur, tableau . . . . . LG 589
Lames de coupe-bordures, Ariens . . . . . LG 584
Lames de coupe-bordures, Black & Decker . . . . . LG 584
Lames de coupe-bordures, Earth Quake . . . . . LG 584
Lames de coupe-bordures, Echo . . . . . LG 584
Lames de coupe-bordures, Homelite . . . . . LG 584
Lames de coupe-bordures, Husqvarna . . . . . LG 585
Lames de coupe-bordures, Jacobesn . . . . . LG 585
Lames de coupe-bordures, John Deere . . . . . LG 585
Lames de coupe-bordures, Kawasaki . . . . . LG 585
Lames de coupe-bordures, Lawn-Boy . . . . . LG 585
Lames de coupe-bordures, Lesco . . . . . LG 585
Lames de coupe-bordures, Little Wonder . . . . . LG 585
Lames de coupe-bordures, Maruyama . . . . . LG 586
Lames de coupe-bordures, McClane . . . . . LG 586
Lames de coupe-bordures, McCulloch . . . . . LG 586
Lames de coupe-bordures, MTD . . . . . LG 586
Lames de coupe-bordures, Power Trim . . . . . LG 586
Lames de coupe-bordures, RedMax . . . . . LG 587
Lames de coupe-bordures, Ryobi . . . . . LG 587
Lames de coupe-bordures, Sears . . . . . LG 587
Lames de coupe-bordures, Shindaiwa . . . . . LG 587
Lames de coupe-bordures, Stihl . . . . . LG 587
Lames de coupe-bordures, Tanaka . . . . . LG 588
Lames de coupe-bordures, Troy-Bilt . . . . . LG 588
Lames de coupe-bordures, Weed Eater . . . . . LG 588
Lames de coupe-borduress, universelles . . . . . LG 588–589
Lames de débroussaillage . . . . . LG 1014
Lames de débroussaillage, outils de limage . . . . . LG 1015
Lames de déchaumage . . . . . LG 368
Lames de scie d'éclaircissage . . . . . LG 1014
LAMES DE TAILLE-HAIES . . . . . LG 783
Lames par longueur, tableau . . . . . LG 350–366
Lames, Allis-Chalmers . . . . . LG 369
Lames, Ariens . . . . . LG 369–374
Lames, AYP . . . . . LG 374–382
Lames, Befco . . . . . LG 382
Lames, Better Outdoors . . . . . LG 383
Lames, Big Bee . . . . . LG 384
Lames, binage . . . . . LG 368
Lames, Bluebird . . . . . LG 590
Lames, Bobcat . . . . . LG 384–388
Lames, Bolens . . . . . LG 388–390
Lames, Bunton . . . . . LG 390–392
Lames, Bush Hog . . . . . LG 392–394
Lames, Caroni . . . . . LG 395
Lames, Country Clipper . . . . . LG 395–397
Lames, coupe-bordures . . . . . LG 584–590
Lames, Craftsman . . . . . LG 397–404
Lames, Cub Cadet . . . . . LG 404–412
Lames, de rechange identiques d'origine . . . . . LG 369–583
Lames, débroussailleuse . . . . . LG 1014
Lames, débroussailleuse et coupe-herbe . . . . . LG 1014
Lames, déchaumage . . . . . LG 368
Lames, Dixie Chopper . . . . . LG 413–416
Lames, Dixon . . . . . LG 416–428
Lames, DR . . . . . LG 428–430
Lames, DR . . . . . LG 428–430
Lames, Dynamow . . . . . LG 430
Lames, Encore . . . . . LG 431–434
Lames, Everide . . . . . LG 434
Lames, Excel . . . . . LG 470–475
Lames, Exmark . . . . . LG 434–443
Lames, Ferris . . . . . LG 443–446
Lames, Ford/New Holland . . . . . LG 447
Lames, Giant Vac . . . . . LG 447–448
Lames, Goodall . . . . . LG 390–392
Lames, Grasshopper . . . . . LG 448–450
Lames, Gravely . . . . . LG 450–456
Lames, Great Dane . . . . . LG 456–457
Lames, guide-chaînes pour scies à chaîne . . . . . FOR 148–179
Lames, Honda . . . . . LG 457–458
Lames, Huskee . . . . . LG 458
Lames, Husqvarna . . . . . LG 458–470
Lames, Hustler . . . . . LG 470–475
Lames, Ingersoll . . . . . LG 475
Lames, Jacobsen . . . . . LG 476–482
Lames, John Deere . . . . . LG 482–493
Lames, Kees . . . . . LG 494–497
Lames, King Kutter . . . . . LG 497
Lames, Kubota . . . . . LG 497–501
Lames, Land Pride . . . . . LG 501–503
Lames, Lastec . . . . . LG 503–504
Lames, Lawn Boy . . . . . LG 505
Lames, Lesco . . . . . LG 505–508
Lames, Massey Ferguson . . . . . LG 508–511
Lames, MTD . . . . . LG 512–521
Lames, Murray . . . . . LG 522–528
Lames, Poulan . . . . . LG 529–533
Lames, Poulan Pro . . . . . LG 311
Lames, Power Trim . . . . . LG 586
Lames, Scag . . . . . LG 535–537
Lames, scie d'éclaircissage de débroussailleuse . . . . . LG 1014
Lames, Scotts . . . . . LG 537–539
Lames, Simplicity . . . . . LG 539–545
Lames, Snapper . . . . . LG 545–556
Lames, Spartan . . . . . LG 557
Lames, Steiner . . . . . LG 557–558
Lames, Sutech . . . . . LG 559
Lames, Swisher . . . . . LG 559
Lames, taille-haie . . . . . LG 783
Lames, tondeuse à gazon . . . . . LG 369–583
Lames, Toro . . . . . LG 560–573
Lames, Troy-Bilt . . . . . LG 573–576
Lames, universelles . . . . . LG 368
Lames, Walker . . . . . LG 576
Lames, Woods . . . . . LG 577–579
Lames, Wright Stander . . . . . LG 579–582
Lames, Zipper . . . . . LG 583
Lampe baladeuse, WL275 Oregon® 40 V MAX sans fil . . . . . OPE 22
Lampe baladeuse, WL275 Oregon®, 40 V MAX sans fil . . . . . OPE 22
Land Pride, lames . . . . . LG 501–503
Lastec, lames . . . . . LG 503–504
Lawn-Boy, bobines d'allumage . . . . . LG 784–787
Lawn-Boy, courroies . . . . . LG 299
Lawn-Boy, filtres à air . . . . . LG 209
Lawn-Boy, lames . . . . . LG 505
Lawn-Boy, lames de coupe-bordures . . . . . LG 585
Lawn-Boy, pointeaux d'admission du carburateur . . . . . LG 629
Lawn-Boy, roues . . . . . LG 1029–1046
Lawn-Boy, roulements . . . . . LG 238–239
Lawn-Boy, trousses de carburateur . . . . . LG 606
Lawn-Chief, arbres . . . . . LG 869
Lesco, courroies . . . . . LG 299
Lesco, lames . . . . . LG 505–508
Lesco, lames de coupe-bordures . . . . . LG 585
Levier d'abattage . . . . . SFS 18
Levier, abattage . . . . . SFS 18
Lime de rechange, dresseur de guide et chaîne de scie à chaîne . . . . . SFS 13
Lingettes pour les mains, Wypall préhumectées . . . . . SFS 68
Liquide d'allumage en aérosol . . . . . SFS 93–94
Liquide d'allumage en aérosol . . . . . SFS 93–94
LISTES DE PIÈCES ILLUSTRÉES . . . . . LG 40–175
Little Wonder, courroies . . . . . LG 300
Little Wonder, lames de coupe-bordures . . . . . LG 585
Little Wonder, roulements . . . . . LG 239
Lubrifiant pour engrenages, "0" . . . . . SFS 92
Lubrifiant pour engrenages, "00" . . . . . SFS 92
Lubrifiant pour engrenages, 80-90 WT . . . . . SFS 92
Lubrifiant utilisé pour monter le pneu sur la jante . . . . . SFS 68
Lubrifiant, engrenage, "0" . . . . . SFS 92
Lubrifiant, engrenage, "00" . . . . . SFS 92
Lubrifiant, engrenage, 80-90 WT . . . . . SFS 92
Lubrifiant, pénétrant . . . . . SFS 93

2019 Index Alphabétique – FR

Lubrifiant, talon . . . SFS 68
Lubrifiants, graisse, nettoyants, solvants et colles . . . SFS 92–98
Lunettes de protection . . . SFS 117–119
Lunettes de sécurité . . . SFS 117–119
Lunettes, de sécurité . . . SFS 117–119
Lunettes, protection . . . SFS 117–119
Lunettes, sécurité . . . SFS 117–119

M

Machine à changer les pneus . . . SFS 69
MAGASIN DE DÉTAIL . . . SFS 4–23
Makita, applications de guide et chaîne . . . FOR 56–59
Makita, applications de pignon . . . FOR 196
Manilles . . . LG 793
Maruyama, applications de guide et chaîne . . . FOR 59
Maruyama, bouchons de réservoir de carburant . . . LG 772
Maruyama, filtres à air . . . LG 209
Maruyama, lames de coupe-bordures . . . LG 586
Maruyama, pièces de taille-bordures et de souffleur . . . LG 1020–1021
Masques respiratoires jetables . . . SFS 120
Masques respiratoires, jetables . . . SFS 120
Masques, respiratoires jetables . . . SFS 120
Massey Fergunson, courroies . . . LG 300
Massey Fergunson, lames . . . LG 508–511
Mastercraft, applications de pignon . . . FOR 196
McClane, câbles de commande . . . LG 709
McClane, courroies . . . LG 300
McClane, roulements . . . LG 239
McCulloch, applications de guide et chaîne . . . FOR 60–62
McCulloch, applications de pignon . . . FOR 196–197
McCulloch, filtres à air . . . LG 209
McCulloch, lames de coupe-bordures . . . LG 586
McCulloch, pièces de taille-bordures et de souffleur . . . LG 1021
McLane, lames de coupe-bordures . . . LG 586
Meule, affûteuse de chaîne . . . LG 687
Meules de 4 1/8 po, affûteuses de chaîne coupante . . . SFS 41
Meules de 5 3/4 po, affûteuses de chaîne coupante . . . SFS 40
Meules en pierre, lames de tondeuses à gazon . . . SFS 59–61
Meules pour affûteuse à chaîne . . . LG 687
Meuleuses à ruban, lames de tondeuse à gazon . . . SFS 58–59
Mitsubishi, démarreurs manuels . . . LG 924
Mitsubishi, filtres à air . . . LG 210
Mitsubishi, poulies de démarreur manuel . . . LG 935
Module d'allumage universel . . . LG 789
Module d'allumage, universel . . . LG 789
Montgomery Ward, applications de pignon . . . FOR 197
Moteur de roue, entraînement hydrostatique . . . LG 697
Moteur-roue hydrostatique . . . LG 696
Moteur, Only One™ 2 temps . . . SFS 19
MTD, adaptateurs de lame . . . LG 340–341
MTD, amorceur de souffleuse à neige . . . LG 860
MTD, arbre de direction . . . LG 940
MTD, arbres . . . LG 893–901
MTD, bagues . . . LG 239–242
MTD, bagues pour souffleuse à neige . . . LG 854–855
MTD, bouchons de réservoir de carburant . . . LG 772
MTD, bras de direction . . . LG 939
MTD, bride de goulotte pour souffleuse à neige . . . LG 855
MTD, câbles de commande . . . LG 710–715
MTD, câbles de commande pour souffleuse à neige . . . LG 856–859
MTD, came de blocage de l'embrayage pour souffleuse à neige . . . LG 856
MTD, clé d'allumage pour souffleuse à neige . . . LG 861
MTD, courroies . . . LG 300–306
MTD, déclencheur de commande de direction pour souffleuse à neige . . . LG 856
MTD, démarreurs 120 V pour souffleuse à neige . . . LG 861
MTD, démarreurs manuels . . . LG 925
MTD, démarreurs manuels pour souffleuse à neige . . . LG 860–861
MTD, disques d'entraînement . . . LG 726
MTD, embrayages à prise de force électrique . . . LG 733–741
MTD, engrenage à vis sans fin en bronze pour souffleuse à neige . . . LG 856
MTD, essieux . . . LG 938
MTD, filtres à air . . . LG 210
MTD, garde-courroie . . . LG 802
MTD, guide de câble d'inclinaison de goulotte de souffleuse à neige . . . LG 856
MTD, interrupteurs d'allumage . . . LG 942–945
MTD, interrupteurs de prise de force . . . LG 946–947
MTD, interrupteurs de sécurité . . . LG 947–948
MTD, joints à rotule . . . LG 938–939
MTD, lame de frein . . . LG 802
MTD, lames . . . LG 512–521
MTD, lames de coupe-bordures . . . LG 586
MTD, moteurs de démarreur . . . LG 921
MTD, pales de souffleuse à neige . . . LG 846
MTD, patins de souffleuse à neige . . . LG 850
MTD, pièces de taille-bordures et de souffleur . . . LG 1021–1022
MTD, pignon de direction . . . LG 941
MTD, plaques de raclage pour souffleuse à neige . . . LG 848–849
MTD, plaquette frein pour souffleuse à neige . . . LG 856
MTD, poires d'amorçage . . . LG 630
MTD, poulies d'entraînement . . . LG 837–838
MTD, poulies de démarreur manuel . . . LG 935
MTD, poulies de tension . . . LG 831–832
MTD, roue de souffleuse à neige . . . LG 856
MTD, roues . . . LG 1029–1046
MTD, roues/roulettes anti-bascule . . . LG 1037–1042
MTD, roulements . . . LG 239–242
MTD, roulements pour souffleuse à neige . . . LG 854–855
MTD, sangles de verrouillage de capot de tondeuse . . . LG 803
MTD, solénoïdes de démarreur . . . LG 730
MTD, trousse avec carburateur pour souffleuse à neige . . . LG 859
MTD, trousses de carburateur . . . LG 606
MTD, vis de cisaillement pour souffleuse à neige . . . LG 852–853
MTD, vis sans fin pour souffleuse à neige . . . LG 846
Murray, adaptateurs de lame . . . LG 342
Murray, arbres . . . LG 902
Murray, articulations de direction . . . LG 939
Murray, bagues . . . LG 242–243
Murray, câbles de commande . . . LG 715–717
Murray, courroies . . . LG 306–309
Murray, interrupteurs d'allumage . . . LG 942–945
Murray, joints à rotule . . . LG 938–939
Murray, lames . . . LG 522–528
Murray, patins de souffleuse à neige . . . LG 850
Murray, poulies d'entraînement . . . LG 838–839
Murray, poulies de tension . . . LG 832–833
Murray, roues . . . LG 1029–1046
Murray, roues/roulettes anti-bascule . . . LG 1037–1042
Murray, roulements . . . LG 242–243
Murray, silencieux . . . LG 809
Murray, tige d'entraînement . . . LG 939
Murray, trousse de boîtier de direction . . . LG 941
Murray, vis de cisaillement pour souffleuse à neige . . . LG 852–853

N

Nettoyant de carburateur en aérosol . . . SFS 93
Nettoyant pour carburateur, aérosol . . . SFS 93
Nettoyant pour freins en aérosol . . . SFS 94
Nettoyant pour les mains Fast Orange . . . SFS 91
Nettoyant pour les mains, Fast Orange . . . SFS 91
Noma, arbres . . . LG 869
Noma, bagues . . . LG 243
Noma, courroies . . . LG 309–310
Noma, roues . . . LG 1029–1046
Noma, roulements . . . LG 243
Noma, vis de cisaillement pour souffleuse à neige . . . LG 852–853

O

Oeillet, raccord de réservoir de carburant . . . LG 767
Oeillets de système de carburant . . . LG 763–764
OEM, poulies d'entraînement de rechange . . . LG 834–840
OEM, poulies de tension de rechange . . . LG 824–834
Oil-Dri, absorbant . . . SFS 68
Oleo-Mac, filtres à air . . . LG 210
Olympyk (Oleo-Mac), applications de guide et chaîne . . . FOR 62–64
Olympyk (Oleo-Mac), applications de pignon . . . FOR 197
Onan, filtres à air . . . LG 211
Onan, moteurs de démarreur . . . LG 921
Onan, régulateurs de tension . . . LG 732
Only One™ huile pour moteur 2 temps . . . SFS 19
OPE, accessoires . . . OPE 23
OPE, chaîne PowerSharp® . . . OPE 25
OPE, pièces de rechange . . . OPE 25
Oregon, applications de pignon . . . FOR 197
Oregon, fendeuses de bûches . . . OPE 38–47
Oregon®, catalogue . . . SFS 23

Oregon®, conduit d'essence . . . . . LG 761
Oregon®, flotteurs de carburateur . . . . . LG 624–625
Oregon®, gonfleur de positionneur de talon . . . . . SFS 70
Oregon®, limes plates, chaîne coupante . . . . . SFS 8
Oregon®, limes rondes, chaîne coupante. . . . . SFS 7–8
Oregon®, machine à changer les pneus . . . . . SFS 69
Oregon®, pointeaux d'admission du carburateur . . . . . LG 629
Oregon®, présentoirs de gouges de chaîne coupante . . . . . SFS 23
Oregon®, roulements à billes Magnum . . . . . LG 224
Oregon®, sélection de produits . . . . . FOR 4
Oregon®, système d'outils sans fil, applications de guide et chaîne . . . . . FOR 64
Oregon®, trousses de carburateur . . . . . LG 606–608
Oregon®. tableau de classification des scies à chaîne . . . . . FOR 3
Outil de mesure de courroie . . . . . LG 331
Outil de mise à niveau du plateau de coupe, tondeuses à gazon . . . . . SFS 64
Outil de nettoyage de rainure, guide de scie à chaîne . . . . . SFS 14
Outil de pliage du câble d'accélérateur . . . . . LG 722
Outil de pliage en Z du câble d'accélérateur . . . . . SFS 66
Outil de rectifications des soupapes . . . . . SFS 66
Outil de réparation de tige de soupape, 4 manières . . . . . SFS 68
Outil de repêchage de tige de soupape . . . . . SFS 68
Outil pneumatique, huile . . . . . SFS 83
OUTILS D'ATELIER . . . . . SFS 24–71
Outils de dressage de meule, affûteuses de chaîne coupante . . . . . SFS 41
Outils de dressage, meules d'affûteuse de chaîne coupante . . . . . SFS 41
Outils de formation, chaîne coupante. . . . . SFS 23
Outils de jauge de profondeur, chaîne coupante . . . . . SFS 8
Outils de limage pour lames de débroussailleuse. . . . . LG 1015
Outils pour pneu . . . . . SFS 69
Outils, atelier . . . . . SFS 24–71

P

Pales, souffleuses à neige. . . . . LG 846–847
Palettes antidéversement . . . . . SFS 89
Palettes, anti-déversement . . . . . SFS 89
Paliers à embout . . . . . LG 804
Partner, applications de guide et chaîne . . . . . FOR 65–66
Partner, applications de pignon . . . . . FOR 197–198
Partner, courroies . . . . . LG 310
Partner, filtres à air. . . . . LG 211
Pastilles d'obturation. . . . . LG 632–633
Pastilles d'obturation de carburateur. . . . . LG 632–633
Patins universels pour souffleuse à neige . . . . . LG 849
Patins, souffleuses à neige . . . . . LG 849–851
Pénétrant, lubrifiant . . . . . SFS 93
Permatex, adhésif frein-filet . . . . . SFS 96
Permatex, produit d'étanchéité . . . . . SFS 96
Pics de levage de grume . . . . . SFS 18
Pics de levage, grumes . . . . . SFS 18
PIÈCES COMMERCIALES . . . . . LG 694–698
PIÈCES D'ALLUMAGE . . . . . LG 784–790
PIÈCES D'ENTRAÎNEMENT. . . . . LG 724–728
Pièces de convertisseur de couple . . . . . LG 675
PIÈCES DE DÉMARREUR . . . . . LG 926–936
Pièces de démarreur manuel . . . . . LG 929–930
PIÈCES DE DIRECTION . . . . . LG 938–941
PIÈCES DE MOTEUR . . . . . LG 745–760
Pièces de rechange pour affûteuses et dérive-chaînes de fin de série . . . SFS 48–57
Pièces de rechange, affûteuses de lame de tondeuse à gazon. . . . . SFS 62
PIÈCES DE ROTOCULTEUR . . . . . LG 954
PIÈCES DE ROULEAU DE CHAÎNE . . . . . LG 676
Pièces de roulette . . . . . LG 694–695
PIÈCES DE SCIE À CHAÎNE ET DE SCIE À TRONÇONNER . . LG 677–693
PIÈCES DE SOUFFLEUSES À NEIGE . . . . . LG 846–863
PIÈCES DE TAILLE-BORDURES ET DE SOUFFLEUSE . . . LG 1016–1027
Pièces de taille-bordures et de souffleuse, Echo . . . . . LG 1016–1018
Pièces de taille-bordures et de souffleuse, Homelite . . . . . LG 1019
Pièces de taille-bordures et de souffleuse, Husqvarna. . . . . LG 1020
Pièces de taille-bordures et de souffleuse, Maruyama . . . . . LG 1020–1021
Pièces de taille-bordures et de souffleuse, McCulloch . . . . . LG 1021
Pièces de taille-bordures et de souffleuse, MTD . . . . . LG 1021–1022
Pièces de taille-bordures et de souffleuse, RedMax . . . . . LG 1022
Pièces de taille-bordures et de souffleuse, Ryan . . . . . LG 1022–1023
Pièces de taille-bordures et de souffleuse, Ryobi. . . . . LG 1022–1023
Pièces de taille-bordures et de souffleuse, Shindaiwa . . . . . LG 1023–1024
Pièces de taille-bordures et de souffleuse, Snapper . . . . . LG 1024
Pièces de taille-bordures et de souffleuse, Stihl . . . . . LG 1024–1026
Pièces de taille-bordures et de souffleuse, Tanaka . . . . . LG 1026
Pièces de taille-bordures et de souffleuse, Weed Eater . . . . . LG 1027
PIÈCES DIVERSES . . . . . LG 802–805
PIÈCES ÉLECTRIQUES . . . . . LG 729–744
Pièces électriques, scies à chaîne . . . . . LG 684–686
Pièces électriques, scies à tronçonner . . . . . LG 684–686
Pièces pour affûteuses, riveteuses et dérive-chaînes de fin de série . . . . SFS 48–57
Pièces pour la suspension de la tondeuse . . . . . LG 804
Pierres d'affûtage, affûteuses de chaîne coupante portatives . . . . . SFS 12
Pignon de direction, MTD . . . . . LG 941
Pignon, plaque d'acier . . . . . LG 725
Pignon, tendeur . . . . . LG 725
PIGNONS – SCIE À CHAÎNE. . . . . FOR 180–210
Pignons d'acier . . . . . LG 725
Pignons d'entraînement, scies à chaîne . . . . . FOR 180–210
Pignons tendeurs . . . . . LG 725
Pince de court-circuitage de bougie d'allumage. . . . . LG 867
Pince de court-circuitage, bougie d'allumage . . . . . LG 867
Pince hémostatique . . . . . SFS 65
Pinces de câble d'accélérateur . . . . . LG 722
Pinces de levage de grume . . . . . SFS 18
Pinces de levage, grumes . . . . . SFS 18
Pioneer, applications de guide et chaîne . . . . . FOR 67–68
Pioneer, applications de pignon . . . . . FOR 198
Pistolet graisseur jetable . . . . . SFS 12–13
Pistolet graisseur jetable . . . . . SFS 12–13
Pistolet graisseur, guides de scie à chaîne. . . . . SFS 12–13
Pistolet graisseur, jetables . . . . . SFS 12–13
Piston, Honda . . . . . LG 754
Plaques de raclage, souffleuses à neige . . . . . LG 847–849
Plateformes antidéversement. . . . . SFS 89
Plates-formes, anti-déversement . . . . . SFS 89
Plots et condensateur, Briggs & Stratton. . . . . LG 789
Plots et condensateur, Kohler . . . . . LG 789
Plots et condensateur, Tecumseh . . . . . LG 789
Pneus, anti-crevaison en mousse rigide . . . . . LG 964
Pneus, bande de roulement à barrettes . . . . . LG 958
Pneus, bande de roulement à chevrons . . . . . LG 959
Pneus, bande de roulement à crampons . . . . . LG 957
Pneus, bande de roulement à nervure pour terrains de golf . . . . . LG 959
Pneus, bande de roulement à rainure droite . . . . . LG 960
Pneus, bande de roulement All Trail II . . . . . LG 964
Pneus, bande de roulement AT100 . . . . . LG 958
Pneus, bande de roulement AT489 . . . . . LG 964
Pneus, bande de roulement chevrons à barrettes. . . . . LG 958
Pneus, bande de roulement en dent de scie . . . . . LG 961
Pneus, bande de roulement lisse . . . . . LG 960
Pneus, bande de roulement magnum. . . . . LG 962
Pneus, bande de roulement Polar Trac . . . . . LG 958
Pneus, bande de roulement pour chariots de golf. . . . . LG 963
Pneus, bande de roulement pour gazon . . . . . LG 959
Pneus, bande de roulement pour terrains de golf . . . . . LG 963
Pneus, bande de roulement Power Trac . . . . . LG 958
Pneus, bande de roulement Scorpion. . . . . LG 963
Pneus, bande de roulement Super Lug . . . . . LG 958
Pneus, bande de roulement Super Turf. . . . . LG 962
Pneus, bande de roulement Tital . . . . . LG 958
Pneus, bande de roulement Tru Power . . . . . LG 958
Pneus, bande de roulement Turf CTR . . . . . LG 963
Pneus, bande de roulement Turf Master . . . . . LG 961
Pneus, bande de roulement Turf Mate . . . . . LG 963
Pneus, bande de roulement Turf Saver . . . . . LG 959
Pneus, bande de roulement Turf Saver II . . . . . LG 960
Pneus, bande de roulement Turf Smart. . . . . LG 962
Pneus, bande de roulement X-Trac . . . . . LG 958
Pneus, bande roulement Snow Hog. . . . . LG 958
Pneus, bande roulement souffleuse à neige . . . . . LG 958
PNEUS, CHAMBRES À AIR ET CHAÎNES DE PNEU . . . . . LG 955–965
Pneus, enveloppe. . . . . LG 964
Pneus, nervure brouette . . . . . LG 957
Pneus, relief agricole. . . . . LG 958
Pneus, remorque grande vitesse . . . . . LG 960
Pneus, VTT à crampons . . . . . LG 963
Poignée de démarrage de souffleuse à neige pour mitaines . . . . . LG 851
Poignées de démarreur manuel. . . . . LG 929–930
Poignées de lime, chaîne coupante . . . . . SFS 9
Poignées, démarreurs manuels. . . . . LG 929–930
Point d'achat de matériel de soutien . . . . . SFS 4–6, 21–23
Pointeaux . . . . . LG 628–629
Pointeaux d'admission . . . . . LG 628–629
Pointeaux d'admission de carburateur . . . . . LG 628–629
Pointeaux de flotteur . . . . . LG 628–629
Poires d'amorçage, scies à chaîne . . . . . LG 690
Poires d'amorçage . . . . . LG 629–632

2019 Index Alphabétique – FR

Polaris, courroies VTT . . . LG 310
Pommeau de levier de vitesses . . . LG 805
Pommeau, levier de vitesse . . . LG 805
Pompe à carburant . . . LG 767
Pompe, à carburant . . . LG 767
Portant à ceinture . . . LG 331
Porte-crayon de marquage . . . SFS 19
Porte-fusibles . . . LG 742
Porte-lames . . . LG 340–342
Poulan / Poulan Pro, applications de guide et chaîne . . . FOR 68–73
Poulan / Poulan Pro, applications de pignon . . . FOR 198–200
Poulan Pro, courroies . . . LG 311
Poulan, filtres à air . . . LG 211–212
Poulan, lames . . . LG 529–533
Poulan, poires d'amorçage . . . LG 630
POULIES . . . LG 821–841
Poulies d'entraînement . . . LG 834–840
Poulies d'entraînement, AYP . . . LG 834
Poulies d'entraînement, Bobcat . . . LG 835
Poulies d'entraînement, Cub Cadet . . . LG 837
Poulies d'entraînement, Exmark . . . LG 836
Poulies d'entraînement, MTD . . . LG 837–838
Poulies d'entraînement, Murray . . . LG 838–839
Poulies d'entraînement, power-trim . . . LG 839
Poulies d'entraînement, Scag . . . LG 839–840
Poulies d'entraînement, Snapper . . . LG 840
Poulies d'entraînement par grosseur, tableau . . . LG 841
Poulies d'entraînement, rechange d'origine . . . LG 834–840
Poulies de démarreur manuel . . . LG 932–935
Poulies de démarreur manuel, Briggs & Stratton . . . LG 933
Poulies de démarreur manuel, Echo . . . LG 933
Poulies de démarreur manuel, Green Machine . . . LG 936
Poulies de démarreur manuel, Homelite . . . LG 934
Poulies de démarreur manuel, Honda . . . LG 934
Poulies de démarreur manuel, Husqvarna . . . LG 934
Poulies de démarreur manuel, Kawasaki . . . LG 935
Poulies de démarreur manuel, Mitsubishi . . . LG 935
Poulies de démarreur manuel, MTD . . . LG 935
Poulies de démarreur manuel, Ryan . . . LG 934–935
Poulies de démarreur manuel, Snapper . . . LG 936
Poulies de démarreur manuel, Stihl . . . LG 936
Poulies de démarreur manuel, Tecumseh . . . LG 936
Poulies de tension . . . LG 821–823
Poulies de tension par grosseur, tableau . . . LG 821–823
Poulies de tension, AMF . . . LG 824
Poulies de tension, AYP . . . LG 824–825
Poulies de tension, Bobcat . . . LG 825–826
Poulies de tension, Bunton . . . LG 826–827
Poulies de tension, Cub Cadet . . . LG 826–827
Poulies de tension, de rechange d'origine . . . LG 824–834
Poulies de tension, Dixie Chopper . . . LG 827
Poulies de tension, Excel . . . LG 827
Poulies de tension, Exmark . . . LG 827–828
Poulies de tension, Grasshopper . . . LG 828
Poulies de tension, Hustler . . . LG 827
Poulies de tension, John Deere . . . LG 829–831
Poulies de tension, MTD . . . LG 831–832
Poulies de tension, Murray . . . LG 832–833
Poulies de tension, Scag . . . LG 833
Poulies de tension, Toro . . . LG 834
Poulies, démarreurs manuels . . . LG 932–935
Poulies, entraînement . . . LG 834–840
Poulies, poulie tendeur . . . LG 824–834
Power Pruner / Echo Power Pruner, applications de guide et chaîne . . . FOR 73–74
Power Trim, courroies . . . LG 311
Power Trim, lames de coupe-bordures . . . LG 586
Power Trim, poulies d'entraînement . . . LG 839
Powerhorse, applications de guide et chaîne . . . FOR 74
PowerSharp®, chaîne de scie pour OPE . . . OPE 25
PowerSharp®, système d'affûtage de chaîne coupante . . . FOR 136–137
PowerSpout, carburants VP . . . SFS 81
Présentoir de point de vente, 120v Professional Series™ . . . OPE 37
Présentoir, lunettes de sécurité . . . SFS 20
Présentoirs de coupe-chaîne, chaîne coupante Oregon® . . . SFS 23
Présentoirs modulaires . . . SFS 4–6
Produit antifuite pour pneu, Slime® . . . SFS 98
Produit d'étanchéité, Permatex . . . SFS 95
Protecteur de pompe pour nettoyeur haute pression, atomiseur . . . SFS 98
Protecteur de pompe, nettoyeur haute pression, atomiseur . . . SFS 98
Protecteurs d'oreilles, sécurité auditive . . . SFS 121
PS250, guide-chaîne . . . OPE 25
PS250, scie à long manche . . . OPE 20
Puissance d'entraînement par engrenages . . . OPE 20
PULVÉRISATEURS . . . LG 911–912
Pulvérisateurs à dos . . . LG 911

R

Raccords d'essence . . . LG 765
Raccords, carburant . . . LG 765–766
Racleur, joint . . . LG 760
Rallonge EX600, accessoires multiples sans fil . . . OPE 12
Rampe Poly-RampMC . . . SFS 89
Rampe, Poly-Ramp . . . SFS 89
Rampes, tondeuses à gazon . . . SFS 64
Ransomes, roues anti-crevaison semi-pneumatiques . . . LG 1044–1046
Rectifieuse de soupape . . . SFS 67
Rectifieuse de soupapes . . . SFS 67
Red Hawk, lames . . . LG 534–535
RedMax, applications de guide et chaîne . . . FOR 74–76
RedMax, applications de pignon . . . FOR 200
RedMax, filtres à air . . . LG 212
RedMax, lames de coupe-bordures . . . LG 587
RedMax, pièces de taille-bordures et de souffleur . . . LG 1022
RedMax, ressorts de démarreur manuel . . . LG 937
Régulateurs de tension . . . LG 731–732
Régulateurs, tension . . . LG 731–732
Remington, applications de guide et chaîne . . . FOR 77–78
Remington, applications de pignon . . . FOR 200
Reniflard de système de carburant . . . LG 763–764
RENSEIGNEMENTS DE L'ANSI . . . FOR 2–4
Réservoirs à essence . . . LG 770
Réservoirs à essence, Honda . . . LG 770
Réservoirs, carburant . . . LG 770
RESSORTS . . . LG 913–914
Ressorts d'extension, assortiment . . . SFS 104
Ressorts de démarreur manuel . . . LG 937
Ressorts de démarreur manuel, Briggs & Stratton . . . LG 937
Ressorts de démarreur manuel, Dolmar . . . LG 937
Ressorts de démarreur manuel, Echo . . . LG 937
Ressorts de démarreur manuel, Green Machine . . . LG 937
Ressorts de démarreur manuel, Hoffco . . . LG 937
Ressorts de démarreur manuel, Homelite . . . LG 937
Ressorts de démarreur manuel, Honda . . . LG 937
Ressorts de démarreur manuel, Husqvarna . . . LG 937
Ressorts de démarreur manuel, Jonsered . . . LG 937
Ressorts de démarreur manuel, Kawasaki . . . LG 937
Ressorts de démarreur manuel, Kohler . . . LG 937
Ressorts de démarreur manuel, RedMax . . . LG 937
Ressorts de démarreur manuel, Robin . . . LG 937
Ressorts de démarreur manuel, Shindaiwa . . . LG 937
Ressorts de démarreur manuel, Stihl . . . LG 937
Ressorts de torsion, assortiment . . . SFS 104
Ressorts, démarreurs manuels . . . LG 937
Riveteuse d'établi pour chaîne coupante . . . SFS 44
Riveteuse de chaîne coupante à usage intensif . . . SFS 46
Riveteuse électrique compacte . . . SFS 42
Riveteuse, chaîne coupante, usage intensif . . . SFS 46
Riveteuse, électrique compacte . . . SFS 42
Robin, bobines d'allumage . . . LG 784–787
Robin, carburateurs . . . LG 596
Robin, démarreurs manuels . . . LG 925
Robin, ressorts de démarreur manuel . . . LG 937
Robinet de purge d'huile . . . LG 760
Robinets d'arrêt de conduit d'essence . . . LG 766–767
Robinets d'arrêt, conduit d'essence . . . LG 766–767
Rondelles . . . SFS 106
Rondelles cuvettes en acier . . . SFS 106
Rondelles en fibre . . . SFS 106
Rondelles plates en acier . . . SFS 106
Rondelles, acier plat . . . SFS 106
Rondelles, creuses en acier . . . SFS 106
Rondelles, fibre . . . SFS 106
Roper, arbres . . . LG 903–904
Roper, bagues . . . LG 227–228
Roper, courroies . . . LG 311–312
Roper, roulements . . . LG 227–228
ROUES . . . LG 1029–1047
Roues anti-crevaison semi-pneumatiques . . . LG 1044–1046
Roues de brouette . . . LG 1047
Roues pneumatiques . . . LG 1044–1046
Roues semi-pneumatiques universelles . . . LG 1029–1037

Roues semi-pneumatiques, AMF . . . LG 1029–1037
Roues semi-pneumatiques, AYP . . . LG 1029–1037
Roues semi-pneumatiques, Bobcat . . . LG 1029–1037
Roues semi-pneumatiques, Bunton . . . LG 1029–1037
Roues semi-pneumatiques, Honda . . . LG 1029–1037
Roues semi-pneumatiques, Husqvarna . . . LG 1029–1037
Roues semi-pneumatiques, John Deere . . . LG 1029–1037
Roues semi-pneumatiques, Lawn-Boy . . . LG 1029–1037
Roues semi-pneumatiques, MTD . . . LG 1029–1037
Roues semi-pneumatiques, Murray . . . LG 1029–1037
Roues semi-pneumatiques, Noma . . . LG 1029–1037
Roues semi-pneumatiques, Sears . . . LG 1029–1037
Roues semi-pneumatiques, Sensation . . . LG 1029–1037
Roues semi-pneumatiques, Snapper . . . LG 1029–1037
Roues semi-pneumatiques, Toro . . . LG 1029–1037
Roues, affûteuses pour scie à chaîne . . . SFS 40–41
Roues, AMF . . . LG 1029–1046
Roues, AYP . . . LG 1029–1046
Roues, Bobcat . . . LG 1029–1046
Roues, brouettes . . . LG 1047
Roues, Bunton . . . LG 1029–1046
Roues, Honda . . . LG 1029–1046
Roues, Husqvarna . . . LG 1029–1046
Roues, John Deere . . . LG 1029–1046
Roues, Lawn Boy . . . LG 1029–1046
Roues, MTD . . . LG 1029–1046
Roues, Murray . . . LG 1029–1046
Roues, Noma . . . LG 1029–1046
Roues, Sears . . . LG 1029–1046
Roues, semi-pneumatiques universelles . . . LG 1029–1037
Roues, Sensation . . . LG 1029–1046
Roues, Snapper . . . LG 1029–1046
Roues, Toro . . . LG 1029–1046
Roues/roulettes anti-bascule, AMF . . . LG 1037–1042
Roues/roulettes anti-bascule, AYP . . . LG 1037–1042
Roues/roulettes anti-bascule, Bobcat . . . LG 1037–1042
Roues/roulettes anti-bascule, Bolens . . . LG 1037–1042
Roues/roulettes anti-bascule, Cub Cadet . . . LG 1037–1042
Roues/roulettes anti-bascule, Exmark . . . LG 1037–1042
Roues/roulettes anti-bascule, Ferris . . . LG 1037–1042
Roues/roulettes anti-bascule, Grasshopper . . . LG 1037–1042
Roues/roulettes anti-bascule, Gravely . . . LG 1037–1042
Roues/roulettes anti-bascule, John Deere . . . LG 1037–1042
Roues/roulettes anti-bascule, Kubota . . . LG 1037–1042
Roues/roulettes anti-bascule, MTD . . . LG 1037–1042
Roues/roulettes anti-bascule, Murray . . . LG 1037–1042
Roues/roulettes anti-bascule, Scag . . . LG 1037–1042
Roues/roulettes anti-bascule, Toro . . . LG 1037–1042
Roues/roulettes anti-bascule, Wheel Horse . . . LG 1037–1042
Roulements - EHP . . . LG 227–228
Roulements - Sears . . . LG 227–228
Roulements à billes . . . LG 223–224
Roulements à rouleaux à cage . . . LG 223
Roulements à rouleaux coniques . . . LG 223
Roulements de roue . . . LG 223–224
Roulements de roue à boudin . . . LG 224
ROULEMENTS ET BAGUES . . . LG 223–249
Roulements, AMF . . . LG 243
Roulements, Ariens . . . LG 225–227
Roulements, AYP . . . LG 227–228
Roulements, billes . . . LG 223–224
Roulements, Bobcat . . . LG 228–230
Roulements, Bunton . . . LG 230
Roulements, Cub Cadet . . . LG 231-232
Roulements, Dixon . . . LG 232
Roulements, embout . . . LG 804
Roulements, Encore . . . LG 232
Roulements, Exmark . . . LG 233-234
Roulements, Ferris . . . LG 234
Roulements, Grasshopper . . . LG 234–235
Roulements, Gravely . . . LG 235
Roulements, Honda . . . LG 235
Roulements, Hustler . . . LG 236
Roulements, Jacobsen . . . LG 236–237
Roulements, John Deere . . . LG 237–238
Roulements, K&S . . . LG 238
Roulements, Lawn Boy . . . LG 238–239
Roulements, Little Wonder . . . LG 239
Roulements, McLane . . . LG 239
Roulements, MTD . . . LG 239–242
Roulements, Murray . . . LG 242–243
Roulements, Noma . . . LG 243
Roulements, Oregon® Magnum, bille . . . LG 224
Roulements, Roper . . . LG 227–228
Roulements, roue . . . LG 223–224
Roulements, roue à boudin . . . LG 224
Roulements, rouleau à cage . . . LG 223
Roulements, rouleau conique . . . LG 223
Roulements, Scag . . . LG 244
Roulements, Simplicity . . . LG 244–245
Roulements, Snapper . . . LG 245–246
Roulements, souffleuses à neige . . . LG 853–855
Roulements, Toro . . . LG 247
Roulements, Yazoo . . . LG 248
Ryan, pièces de taille-bordures et de souffleur . . . LG 1022–1023
Ryan, poulies de démarreur manuel . . . LG 934–935
Ryobi, applications de guide et chaîne . . . FOR 78–79
Ryobi, lames de coupe-bordures . . . LG 587
Ryobi, pièces de taille-bordures et de souffleur . . . LG 1022–1023

S

Sac à outils . . . OPE 23
Sacs à dos de batterie, 120v Professional Series™ . . . OPE 36
SACS À GAZON . . . LG 781–782
Sacs à herbe . . . LG 781–782
Sangle de réservoir à essence, Scag . . . LG 698
Sangle de verrouillage, capots de tondeuse . . . LG 803
Sangles de verrouillage de capot de tondeuse . . . LG 803
Sans fil, tachymètre . . . SFS 67
Scag, arbres . . . LG 903
Scag, bagues . . . LG 244
Scag, bande de frein . . . LG 698
Scag, bouchons de réservoir de carburant . . . LG 772
Scag, câbles de commande . . . LG 717–718
Scag, courroies . . . LG 312–314
Scag, filtres de conduite de carburant . . . LG 774–776
Scag, interrupteurs de prise de force . . . LG 946–947
Scag, interrupteurs de sécurité . . . LG 947–948
Scag, joints à rotule . . . LG 938–939
Scag, lames . . . LG 535–537
Scag, poulies d'entraînement . . . LG 839–840
Scag, poulies de tension . . . LG 833
Scag, roues anti-crevaison semi-pneumatiques . . . LG 1044–1046
Scag, roues pneumatiques . . . LG 1044–1046
Scag, roues/roulettes anti-bascule . . . LG 1037–1042
Scag, roulements . . . LG 244
Scag, sangle de réservoir de carburant . . . LG 698
Scie à long manche à montage central . . . OPE 20
Scie à long manche PS600, accessoires multiples sans fil . . . OPE 12
Scie à tronçonner, courroies . . . LG 684
Scie à tronçonner, filtres à air . . . LG 678–684
Scie à tronçonner, pièces électriques . . . LG 684–686
Scie pour arboriculteurs, scie manuelle courbée . . . SFS 17
Scie pour arboriculteurs, scie manuelle droite . . . SFS 17
Scies à chaîne, affûteuses à chaîne . . . SFS 32–40
Scies à chaîne, affûteuses à chaîne, dérive-chaîne et repoussoir de rivet . . . SFS 26–57
Scies à chaîne, applications de pignon par modèle de scie . . . FOR 187–203
Scies à chaîne, applications de pignon par numéro de pièce Oregon® . . . FOR 204–208
Scies à chaîne, bouchons d'huile . . . LG 690
Scies à chaîne, bouchons de carburant . . . LG 690
Scies à chaîne, chaîne comment commander une chaîne . . . FOR 98
Scies à chaîne, clé . . . LG 677
Scies à chaîne, conduits d'essence . . . LG 688–690
Scies à chaîne, CS300 Oregon® 40 V MAX sans fil . . . OPE 15
Scies à chaîne, dérive-chaîne et riveteuse de nez de guide-chaîne, usage intensif . . . SFS 45
Scies à chaîne, dérive-chaîne, modèle d'établi . . . SFS 43
Scies à chaîne, échelle de chaîne . . . SFS 47
Scies à chaîne, écrous de guide . . . LG 686
Scies à chaîne, ensembles guide et chaîne . . . FOR 100–101
Scies à chaîne, filtres à air . . . LG 678–684
Scies à chaîne, filtres à essence . . . LG 691–692
Scies à chaîne, guide et chaîne, applications . . . FOR 21–97
Scies à chaîne, guide-chaîne, guide, lames de scie à chaîne . . . FOR 148–179
Scies à chaîne, guide-chaîne, guide, lames de scie à chaîne . . . FOR 148–179
Scies à chaîne, huile à guide et chaîne . . . SFS 19, 84
Scies à chaîne, huile pour scie à chaîne, coins d'abattage, tournevis-clés, divers . . . SFS 14, 19–20
Scies à chaîne, meules 4 1/8 po pour affûteuses à chaîne . . . SFS 41
Scies à chaîne, meules 5 3/4 po pour affûteuses à chaîne . . . SFS 40
Scies à chaîne, nez de guide remplaçable . . . FOR 167

2019 Index Alphabétique – FR

Scies à chaîne, outil de mesure de guide et de chaîne coupante . . . . . SFS 14
Scies à chaîne, outil de nettoyage de rainure de guide . . . . . SFS 14
Scies à chaîne, outil dresseur de rail et de guide . . . . . SFS 13
Scies à chaîne, photos de chaînes, descriptions, caractéristiques . . . . FOR 111–137
Scies à chaîne, photos de guides, descriptions, caractéristiques . . . . . FOR 154-166
Scies à chaîne, photos de pignons, descriptions, caractéristiques . . . . FOR 182–186
Scies à chaîne, pièces de rechange de chaîne . . . . . FOR 143
Scies à chaîne, pièces électriques . . . . . LG 684–686
Scies à chaîne, pignons . . . . . FOR 180–210
Scies à chaîne, poires d'amorçage . . . . . LG 690
Scies à chaîne, poulies de démarreur . . . . . LG 692
Scies à chaîne, protecteurs de guide-chaîne . . . . . SFS 13
Scies à chaîne, repoussoir de rivets de chaîne, modèle d'établi . . . . . SFS 44
Scies à chaîne, repoussoir de rivets de chaîne, usage intensif. . . . . SFS 46
Scies à chaîne, ressorts de démarreur . . . . . LG 693
Scies à chaîne, sac à outils . . . . . OPE 23
Scies à chaîne, support pour affûteuse à chaîne . . . . . SFS 41
Scies à chaîne, tableau de conversion de chaîne, N/P chaînes pour amateurs à N/P pour professionnels Oregon® . . . . . FOR 98
Scies à chaîne, tableau de limage de chaîne . . . . . FOR 141
Scies à chaîne, tableau de meules pour chaîne . . . . . FOR 141
Scies à chaîne, tableau de références croisées de la chaîne, Oregon® et autres marques . . . . . FOR 138–139
Scies à chaîne, tableaux de conversion de chaînes, longueurs de chaîne et comptes de maillons-guides. . . . . FOR 147
Scies à chaîne, tendeur de chaîne. . . . . LG 686–687
Scies à chaîne, tendeurs de chaîne . . . . . LG 686–687
Scies à chaîne, terminologie, pièce de chaîne, séquence de chaîne . . . . . FOR 110
Scies à chaîne, traverses . . . . . FOR 171–177
Scies à chaîne, trousse d'affûtage de chaîne . . . . . SFS 10
Scies à long manche, PS250 Oregon® 40 V MAX sans fil . . . . . OPE 20
Scies pour arboriculteurs . . . . . SFS 16–17
Scotts, courroies . . . . . LG 315
Scotts, lames . . . . . LG 537–539
Sears / Craftsman, adaptateurs de lame. . . . . LG 342
Sears / Craftsman, applications de guide et chaîne . . . . . FOR 23–25
Sears / Craftsman, applications de pignon. . . . . FOR 200
Sears / Craftsman, arbres . . . . . LG 903–904
Sears / Craftsman, bagues . . . . . LG 227–228
Sears / Craftsman, courroies . . . . . LG 315
Sears / Craftsman, lames de coupe-bordures. . . . . LG 587
Sears / Craftsman, roues . . . . . LG 1029–1046
Sears / Craftsman, roulements . . . . . LG 227–228
Secteur denté de direction, AYP . . . . . LG 941
Secteur denté de direction, Husqvarna . . . . . LG 941
Sécurité auditive, protecteurs d'oreille. . . . . SFS 121
Sécurité, renseignements de l'ANSI scie à chaîne. . . . . FOR 2–3
Sel de déglaçage pour neige et glace . . . . . SFS 97
Sel de déglaçage, neige et glace . . . . . SFS 97
Sensation, roues . . . . . LG 1029–1046
Serre-câbles en plastique . . . . . LG 723
Shihl, lames de coupe-bordures . . . . . LG 587
Shindaiwa, applications de guide et chaîne . . . . . FOR 79–83
Shindaiwa, bouchons de réservoir de carburant . . . . . LG 772
Shindaiwa, filtres à air . . . . . LG 212–213
Shindaiwa, lames de coupe-bordures . . . . . LG 587
Shindaiwa, pièces de taille-bordures et de souffleur . . . . . LG 1023–1024
Shindaiwa, ressorts de démarreur manuel . . . . . LG 937
SIÈGES . . . . . LG 842–844
SILENCIEUX . . . . . LG 806–810
Silencieux, Briggs & Stratton . . . . . LG 806–807
Silencieux, Cub Cadet . . . . . LG 807
Silencieux, Gravely . . . . . LG 807
Silencieux, Honda. . . . . LG 807–808
Silencieux, Kohler . . . . . LG 808–809
Silencieux, Murray . . . . . LG 809
Silencieux, Snapper . . . . . LG 809
Silencieux, Tecumseh . . . . . LG 809–810
Silencieux, Toro. . . . . LG 810
Silencieux, Wheel Horse . . . . . LG 810
Silencieux, Wisconsin . . . . . LG 810
Simplicity, bagues . . . . . LG 244–245
Simplicity, barres de raclage pour souffleuse à neige . . . . . LG 849
Simplicity, courroies . . . . . LG 316
Simplicity, embrayages à prise de force électrique . . . . . LG 733–741
Simplicity, lames . . . . . LG 539–545
Simplicity, roulements . . . . . LG 244–245
Siphon, carburants VP . . . . . SFS 81
Skil, applications de guide et chaîne . . . . . FOR 83
Skil, applications de pignon . . . . . FOR 201
Slime®, produit antifuite pour pneu . . . . . SFS 98
Snapper, adaptateurs de lame. . . . . LG 342
Snapper, applications de guide et chaîne. . . . . FOR 84
Snapper, applications de pignon . . . . . FOR 201
Snapper, bagues . . . . . LG 245–246
Snapper, bande de frein . . . . . LG 698
Snapper, barres de raclage pour souffleuse à neige . . . . . LG 849
Snapper, câbles de commande . . . . . LG 718–719
Snapper, courroies . . . . . LG 316–319
Snapper, disques d'entraînement . . . . . LG 727
Snapper, embrayages à prise de force électrique . . . . . LG 733–741
Snapper, filtres de conduite de carburant . . . . . LG 774–776
Snapper, interrupteurs d'arrêt d'urgence. . . . . LG 949
Snapper, interrupteurs d'allumage . . . . . LG 942–945
Snapper, interrupteurs de prise de force . . . . . LG 946–947
Snapper, interrupteurs de sécurité . . . . . LG 947–948
Snapper, interrupteurs marche-arrêt. . . . . LG 950
Snapper, joints à rotule . . . . . LG 938–939
Snapper, lames . . . . . LG 545–556
Snapper, pales de souffleuse à neige. . . . . LG 849
Snapper, patins de souffleuse à neige . . . . . LG 850
Snapper, pièces de taille-bordures et de souffleur . . . . . LG 1024
Snapper, poulies d'entraînement . . . . . LG 840
Snapper, poulies de démarreur manuel . . . . . LG 936
Snapper, roues . . . . . LG 1029–1046
Snapper, roues pneumatiques. . . . . LG 1044–1046
Snapper, roulements . . . . . LG 245–246
Snapper, silencieux. . . . . LG 809
Snapper, soufflet d'étanchéité. . . . . LG 805
Snapper, vis de cisaillement pour souffleuse à neige . . . . . LG 852–853
Socle de bûches . . . . . OPE 46
Socle de bûches intégré . . . . . OPE 46
Solénoïdes . . . . . LG 729–730
Solo, applications de guide et chaîne . . . . . FOR 84–87
Solo, applications de pignon. . . . . FOR 201
Solvant de nettoyage. . . . . SFS 94
Solvant, nettoyage . . . . . SFS 94
Souffleur dorsal BL120VX, 120v Professional Series™ . . . . . OPE 32
Souffleuse à main, Oregon® 40 V MAX sans fil . . . . . OPE 18
Souffleuse à neige, ailette, Toro. . . . . LG 851
Souffleuse à neige, amorceur, Cub Cadet . . . . . LG 860
Souffleuse à neige, amorceur, MTD. . . . . LG 860
Souffleuse à neige, bagues, Ariens . . . . . LG 853–854
Souffleuse à neige, bagues, Cub Cadet. . . . . LG 854–855
Souffleuse à neige, bagues, John Deere . . . . . LG 854
Souffleuse à neige, bagues, MTD . . . . . LG 854–855
Souffleuse à neige, barres de raclage . . . . . LG 847–849
Souffleuse à neige, barres de raclage, Ariens . . . . . LG 847
Souffleuse à neige, barres de raclage, Honda . . . . . LG 847
Souffleuse à neige, barres de raclage, Jacobsen . . . . . LG 848
Souffleuse à neige, barres de raclage, John Deere . . . . . LG 847–848
Souffleuse à neige, barres de raclage, Simplicity . . . . . LG 849
Souffleuse à neige, barres de raclage, Snapper. . . . . LG 849
Souffleuse à neige, barres de raclage, Toro . . . . . LG 849
Souffleuse à neige, bride de goulotte, Cub Cadet . . . . . LG 855
Souffleuse à neige, bride de goulotte, MTD . . . . . LG 855
Souffleuse à neige, câbles de commande de direction . . . . . LG 701–720
Souffleuse à neige, câbles de commande de goulotte . . . . . LG 701–720
Souffleuse à neige, câbles de commande de vis sans fin. . . . . LG 701–720
Souffleuse à neige, câbles de commande, Cub Cadet. . . . . LG 856–859
Souffleuse à neige, câbles de commande, MTD . . . . . LG 856–859
Souffleuse à neige, came de blocage de l'embrayage, Cub Cadet . . . . . LG 856
Souffleuse à neige, came de blocage de l'embrayage, MTD . . . . . LG 856
Souffleuse à neige, clé d'allumage, Cub Cadet. . . . . LG 861
Souffleuse à neige, clé d'allumage, MTD. . . . . LG 861
Souffleuse à neige, clé de démarreur, MTD . . . . . LG 861
Souffleuse à neige, courroies . . . . . LG 862–863
Souffleuse à neige, déclencheur de commande de direction, Cub Cadet . . . . LG 856
Souffleuse à neige, déclencheur de commande de direction, MTD . . . . . LG 856
Souffleuse à neige, démarreurs 120 V, Cub Cadet . . . . . LG 861
Souffleuse à neige, démarreurs 120 V, MTD . . . . . LG 861
Souffleuse à neige, démarreurs 120 V, Tecumseh . . . . . LG 861
Souffleuse à neige, démarreurs manuels, Cub Cadet. . . . . LG 860–861
Souffleuse à neige, démarreurs manuels, MTD . . . . . LG 860–861
Souffleuse à neige, disque d'entraînement . . . . . LG 851
Souffleuse à neige, engrenage à vis sans fin en bronze, Cub Cadet . . . . . LG 856
Souffleuse à neige, engrenage à vis sans fin en bronze, MTD . . . . . LG 856
Souffleuse à neige, guide câble d'inclinaison de goulotte, Cub Cadet . . . . . LG 856
Souffleuse à neige, guide câble d'inclinaison de goulotte, MTD . . . . . LG 856
Souffleuse à neige, pales . . . . . LG 846–847
Souffleuse à neige, pales, Honda . . . . . LG 846
Souffleuse à neige, pales, MTD . . . . . LG 846
Souffleuse à neige, pales, Snapper . . . . . LG 847
Souffleuse à neige, pales, Toro . . . . . LG 847

Souffleuse à neige, patins . . . . . LG 849–851
Souffleuse à neige, patins, Ariens . . . . . LG 850
Souffleuse à neige, patins, Ariens . . . . . LG 850
Souffleuse à neige, patins, AYP . . . . . LG 850
Souffleuse à neige, patins, Honda. . . . . LG 850
Souffleuse à neige, patins, John Deere. . . . . LG 850
Souffleuse à neige, patins, MTD. . . . . LG 850
Souffleuse à neige, patins, Murray . . . . . LG 850
Souffleuse à neige, patins, Snapper . . . . . LG 850
Souffleuse à neige, patins, Toro. . . . . LG 851
Souffleuse à neige, patins, Universal. . . . . LG 849
Souffleuse à neige, plaques de raclage . . . . . LG 847–849
Souffleuse à neige, plaques de raclage, Cub Cadet . . . . . LG 848
Souffleuse à neige, plaques de raclage, MTD . . . . . LG 848–849
Souffleuse à neige, plaquette frein, Cub Cadet . . . . . LG 856
Souffleuse à neige, plaquette frein, MTD. . . . . LG 856
Souffleuse à neige, poignée de démarreur, pour mitaines . . . . . LG 851
Souffleuse à neige, roue, Cub Cadet . . . . . LG 856
Souffleuse à neige, roue, MTD. . . . . LG 856
Souffleuse à neige, roulements. . . . . LG 853–855
Souffleuse à neige, roulements, Ariens . . . . . LG 853–854
Souffleuse à neige, roulements, Cub Cadet . . . . . LG 854–855
Souffleuse à neige, roulements, John Deere. . . . . LG 854
Souffleuse à neige, roulements, MTD . . . . . LG 854–855
Souffleuse à neige, trousses de carburateur, Cub Cadet . . . . . LG 859
Souffleuse à neige, trousses de carburateur, MTD . . . . . LG 859
Souffleuse à neige, vis de cisaillement. . . . . LG 852–853
Souffleuse à neige, vis de cisaillement, Ariens . . . . . LG 852–853
Souffleuse à neige, vis de cisaillement, Honda . . . . . LG 852–853
Souffleuse à neige, vis de cisaillement, Husqvarna. . . . . LG 852–853
Souffleuse à neige, vis de cisaillement, Jacobsen . . . . . LG 852–853
Souffleuse à neige, vis de cisaillement, John Deere . . . . . LG 852–853
Souffleuse à neige, vis de cisaillement, MTD . . . . . LG 852–853
Souffleuse à neige, vis de cisaillement, Murray . . . . . LG 852–853
Souffleuse à neige, vis de cisaillement, Noma. . . . . LG 852–853
Souffleuse à neige, vis de cisaillement, Snapper . . . . . LG 852–853
Souffleuse à neige, vis de cisaillement, Universal . . . . . LG 852–853
Souffleuse à neige, vis sans fin, MTD. . . . . LG 846
Souffleuse, BL300 Oregon® 40 V MAX sans fil, portative. . . . . OPE 18
Soupape, purge d'huile. . . . . LG 760
Soupapes d'admission, Honda. . . . . LG 755
Soupapes d'arrêt de conduit d'essence. . . . . LG 766–767
Soupapes d'échappement, Honda. . . . . LG 755
Spartan, lames . . . . . LG 557
ST275 Coupe-bordure/taille-bordure. . . . . OPE 19
ST275 Tête de taille-bordure . . . . . OPE 26
Stabilisateur d'essence . . . . . SFS 85
Stabilisateur, essence . . . . . SFS 85
Stanley Hydraulic, applications de guide et chaîne . . . . . FOR 87
Steiner, lames. . . . . LG 557–558
Stihl, applications de guide et chaîne. . . . . FOR 88–92
Stihl, applications de pignon. . . . . FOR 201–203
Stihl, bobines d'allumage . . . . . LG 784–787
Stihl, Bouchons de réservoir de carburant. . . . . LG 773
Stihl, cliquets et ressorts de démarreur . . . . . LG 930–931
Stihl, courroies . . . . . LG 320
Stihl, filtres à air . . . . . LG 213–216
Stihl, pièces de taille-bordures et de souffleur . . . . . LG 1024–1026
Stihl, poignée de démarreur. . . . . LG 931
Stihl, poulies de démarreur manuel . . . . . LG 936
Stihl, ressorts de démarreur manuel. . . . . LG 937
Stocks essentiels. . . . . SFS 21
Sun Joe, applications de guide et chaîne. . . . . FOR 92–93
SuperTwist Gatorline Magnum™ pour ST275 . . . . . OPE 27
Support d'arbre de direction, AYP. . . . . LG 939
Support d'arbre de direction, Husqvarna. . . . . LG 939
Support de fendeuse de bûches. . . . . OPE 46
Support, affûteuse pour scie coupante. . . . . SFS 41
Support, crayon de marquage. . . . . SFS 19
Support, fendeuses de bûches . . . . . OPE 46
Supports d'équipement commercial . . . . . SFS 74–76
Supports, équipement commercial. . . . . SFS 74–76
Sutech, lames. . . . . LG 559
Swisher, lames . . . . . LG 559
Swisher, roues anti-crevaison semi-pneumatiques. . . . . LG 1044–1046
Système d'outils sans fil, BL300 Oregon®, 40 V MAX, souffleuse . . . . . OPE 18
Système d'outils sans fil, bloc-batteries au lithium-ion PowerNow™. . . . . OPE 10
Système d'outils sans fil, chargeurs de batterie. . . . . OPE 10
Système d'outils sans fil, CS300 Oregon®, 40 V MAX, scie à chaîne. . . . . OPE 15
Système d'outils sans fil, HT250 Oregon®, 40 V MAX, taille-haie . . . . . OPE 21
Système d'outils sans fil, présentoir de point de vente . . . . . OPE 27–29
Système d'outils sans fil, PS250 Oregon®, 40 V MAX, scie à long manche . . . OPE 20
Système d'outils sans fil, ST275 Oregon®, 40 V MAX, coupe-bordure/taille-bordure. . . . . OPE 19
Système d'outils sans fil, tondeuse à gazon, LM300 Oregon® 40V MAX. . . . . OPE 16
Système d'outils sans fil, tondeuse à gazon, LM400 Oregon® 40V MAX. . . . . OPE 17
Système d'outils sans fil, WL275 Oregon®, 40 V MAX, lampe baladeuse . . . . OPE 22
Système sans fil pour accessoires multiples . . . . . OPE 11–14

T

Tableau de dépannage des courroies . . . . . LG 338–339
Tableau, applications de guide et chaîne . . . . . FOR 21–97
Tableau, Classification ANSI des scies à chaîne . . . . . FOR 2
Tableau, conversion des longueurs de scie à chaîne et comptes de maillons-guides . . . . . FOR 147
Tableau, ensembles guide et chaîne . . . . . FOR 100–101
Tableau, pignons de scie à chaîne, applications par modèle de scie. . . . FOR 187–203
Tableau, pignons de scie à chaîne, applications par numéro de pièce Oregon® . . . . . FOR 204–208
Tableau, scie à chaîne, pièces de rechange . . . . . FOR 143
Tableau, spécification du limage de la scie à chaîne . . . . . FOR 140–141
Tableaux de référence pour trousse de carburateur. . . . . LG 634–674
Tachymètre, sans fil . . . . . SFS 67
Taille-bordures EG120VX , 120v Professional Series™ . . . . . OPE 35
Taille-bordures EG600, accessoires multiples sans fil . . . . . OPE 13
Taille-haie , HT250 Oregon®, 40 V MAX sans fil . . . . . OPE 21
Taille-haie BHT120VX, 120v Professional Series™. . . . . OPE 34
Taille-haie HT600, accessoires multiples sans fil . . . . . OPE 13
Tanaka, applications de guide et chaîne . . . . . FOR 93–95
Tanaka, applications de pignon . . . . . FOR 203
Tanaka, bouchons de réservoir de carburant . . . . . LG 773
Tanaka, lames de coupe-bordures . . . . . LG 588
Tanaka, pièces de taille-bordures et de souffleur. . . . . LG 1026
Tecumseh, bobines d'allumage . . . . . LG 784–787
Tecumseh, carburateurs. . . . . LG 598–601
Tecumseh, clé d'allumage pour souffleuse à neige . . . . . LG 861
Tecumseh, cuves de carburateurs . . . . . LG 625
Tecumseh, démarreurs 120 V pour souffleuse à neige . . . . . LG 861
Tecumseh, démarreurs manuels . . . . . LG 922–925
Tecumseh, diaphragmes de carburateur. . . . . LG 623
Tecumseh, engrenages de démarreur électrique . . . . . LG 929
Tecumseh, ensemble de joints statiques. . . . . LG 758
Tecumseh, filtres à air, mousse . . . . . LG 219
Tecumseh, filtres à air, papier. . . . . LG 216–218
Tecumseh, filtres à huile. . . . . LG 814–819
Tecumseh, filtres de conduite de carburant . . . . . LG 774–776
Tecumseh, flotteurs de carburateur . . . . . LG 625
Tecumseh, joint à l'huile . . . . . LG 759
Tecumseh, joints statiques . . . . . LG 758–759
Tecumseh, moteurs de démarreur . . . . . LG 922
Tecumseh, plots et condensateur. . . . . LG 789
Tecumseh, poignée de démarreur. . . . . LG 931
Tecumseh, pointeaux d'admission du carburateur . . . . . LG 629
Tecumseh, poires d'amorçage. . . . . LG 630
Tecumseh, poulies de démarreur manuel . . . . . LG 936
Tecumseh, silencieux . . . . . LG 809–810
Tecumseh, tableau de référence de carburateur . . . . . LG 594–595
Tecumseh, trousses de carburateur . . . . . LG 608–609
Tender, Battery . . . . . LG 743
Tendeurs de chaîne, scies à chaîne . . . . . LG 686–687
Tendeurs de chaîne, scies à chaîne . . . . . LG 686–687
Testeur d'allumage . . . . . SFS 65
Testeur de compression . . . . . SFS 65
Testeur, compression . . . . . SFS 65
Testeur, étincelle . . . . . SFS 65
Tête de coupe-herbes à chargement rapide . . . . . OPE 26
Tête de taille-bordures pour matériel de plein air motorisé . . . . . OPE 26
Tête motorisée PH600, accessoires multiples sans fil . . . . . OPE 12
Têtes de taille-bordures de rechange ST275. . . . . OPE 26
Têtes de taille-bordures, 4 po Heavy Duty Gatorhead Magnum™ . . . . . LG 989
Têtes de taille-bordures, 6 po Heavy Duty Gatorhead Magnum™ . . . . . LG 990
Têtes de taille-bordures, à alimentation de cordon à percussion . . . . . LG 985–994
Têtes de taille-bordures, à alimentation manuelle . . . . . LG 995
Têtes de taille-bordures, Gator® SpeedLoad™ . . . . . LG 968–978
Têtes de taille-bordures, rechange pour Stihl 25-2 Auto Cut. . . . . LG 988
Têtes de taille-bordures, tableau d'applications. . . . . LG 997–1013
Têtes de taille-bordures, tête de coupe à fil fixe. . . . . LG 996
Têtes de taille-bordures, tête de coupe Lightning Load™ . . . . . LG 985
Têtes de taille-bordures, tête de coupe Pivotrim™ . . . . . LG 996
Têtes de taille-bordures, tête de coupe Speed-Feed™ . . . . . LG 986–987
Têtes de taille-bordures, tête Jet-Fit Express de Kwik Loader™ . . . . . LG 995

2019 Index Alphabétique – FR

Têtes de taille-bordures, têtes Jet-Fit™ . . . . . LG 995
Têtes longues, Honda . . . . . LG 755
TIGES . . . . . LG 869–910
Tiges d'entraînement . . . . . LG 939
Tiges de soupape de pneu sans chambre à air . . . . . LG 957
Tiges de soupape, pneus sans chambre à air . . . . . LG 957
Tiges, Briggs & Stratton . . . . . LG 750
Tiges, Honda . . . . . LG 755
Tillotson, carburateur . . . . . LG 595
Tillotson, pointeaux d'admission du carburateur . . . . . LG 629
Tillotson, trousses de carburateur . . . . . LG 609–610
TK, trousses de carburateur . . . . . LG 608
Tondeuse à gazon commerciale, entretoises et bagues . . . . . LG 697
Tondeuse à gazon commerciale, moteurs de roue . . . . . LG 696
Tondeuse à gazon commerciale, pièces de roulette-guide . . . . . LG 694–695
Tondeuse à gazon LM300 Oregon® 40V MAX, système d'outils sans fil . . . . . OPE 16
Tondeuse à gazon LM400 Oregon® 40V MAX, système d'outils sans fil . . . . . OPE 17
Tondeuse à gazon, accessoire d'affûtage de lames . . . . . SFS 62
Tondeuse à gazon, affûteuse de lames . . . . . SFS 58–63
Tondeuse à gazon, aiguisoir de lames . . . . . SFS 58–63
Tondeuse à gazon, boîte de lames . . . . . SFS 21
Tondeuse à gazon, équilibreur de lame . . . . . SFS 63
Tondeuse à gazon, essieux-porteurs . . . . . SFS 77–78
Tondeuse à gazon, outil de nivellement de châssis . . . . . SFS 63
Tondeuse à gazon, pièces de rechange pour affûteuse de lame . . . . . SFS 62
Tondeuse à gazon, rampes . . . . . SFS 64
Tondeuse à gazon, sièges . . . . . LG 842–844
Toro, ailette de souffleuse à neige . . . . . LG 851
Toro, applications de guide et chaîne . . . . . FOR 95
Toro, arbres . . . . . LG 905
Toro, arrêt de la poignée . . . . . LG 802
Toro, barres de raclage pour souffleuse à neige . . . . . LG 849
Toro, bouchons de réservoir de carburant . . . . . LG 773
Toro, câbles de commande . . . . . LG 719–720
Toro, courroies . . . . . LG 320–323
Toro, embrayages à prise de force électrique . . . . . LG 733–741
Toro, filtres à air . . . . . LG 219–220
Toro, filtres de conduite de carburant . . . . . LG 774–776
Toro, interrupteurs d'arrêt d'urgence . . . . . LG 949
Toro, interrupteurs de prise de force . . . . . LG 946–947
Toro, interrupteurs de sécurité . . . . . LG 947–948
Toro, interrupteurs marche-arrêt . . . . . LG 949
Toro, lames . . . . . LG 560–573
Toro, pales de souffleuse à neige . . . . . LG 847
Toro, patins de souffleuse à neige . . . . . LG 851
Toro, poulies de tension . . . . . LG 834
Toro, roues . . . . . LG 1029–1046
Toro, roues anti-crevaison semi-pneumatiques . . . . . LG 1044–1046
Toro, roues pneumatiques . . . . . LG 1044–1046
Toro, roues/roulettes anti-bascule . . . . . LG 1037–1042
Toro, roulements . . . . . LG 247
Toro, silencieux . . . . . LG 810
Tournevis-clés . . . . . SFS 19
Traitement de moteur Sea Foam . . . . . SFS 81
Traitement de moteur, Sea Foam . . . . . SFS 81
Traitements de moteur . . . . . SFS 81
Traitements, moteur . . . . . SFS 81
TRINGLERIE, CRICS ET QUINCAILLERIE . . . . . LG 792–801
Trousse d'entretien, chaîne coupante . . . . . SFS 10
Trousse de réparation de pneu sans chambre à air . . . . . SFS 69
Trousse de système de carburant . . . . . LG 764–765
Trousses de carburateur . . . . . LG 602–621
Trousses de carburateur Nikki . . . . . LG 606
Trousses de carburateur Walbro . . . . . LG 608–614
Trousses de carburateur, Briggs & Stratton . . . . . LG 602–604
Trousses de carburateur, Cub Cadet . . . . . LG 604–605
Trousses de carburateur, Homelite . . . . . LG 605
Trousses de carburateur, Honda . . . . . LG 605
Trousses de carburateur, Kohler . . . . . LG 605
Trousses de carburateur, Lawn Boy . . . . . LG 606
Trousses de carburateur, MTD . . . . . LG 606
Trousses de carburateur, Nikki . . . . . LG 606
Trousses de carburateur, Oregon® . . . . . LG 606–608
Trousses de carburateur, Tecumseh . . . . . LG 608–609
Trousses de carburateur, Tillotson . . . . . LG 609–610
Trousses de carburateur, TK . . . . . LG 608
Trousses de carburateur, Walbro . . . . . LG 608–614
Trousses de carburateur, Zama . . . . . LG 614–621
Trousses de réparation de pulvérisateurs à dos . . . . . LG 911–912
Trousses de réparation, pneumatique sans chambre à air . . . . . SFS 69
Troy-Bilt, applications de guide et chaîne . . . . . FOR 95–96
Troy-Bilt, courroies . . . . . LG 324
Troy-Bilt, lames . . . . . LG 573–576
Troy-Bilt, lames de coupe-bordures . . . . . LG 588
Tuyau, silencieux Honda . . . . . LG 807–808

U

UNIVERSELLES, LAMES . . . . . LG 368

V

Vérins . . . . . LG 796–798
Vérins d'amortisseur . . . . . LG 695
Veste de pluie . . . . . SFS 115
Vêtement de pluie . . . . . SFS 115
Vêtements, pluie . . . . . SFS 115
Vis à épaulement . . . . . SFS 104–105
Vis de cisaillement universelles pour souffleuse à neige . . . . . LG 852–853
Vis de cisaillement, souffleuses à neige . . . . . LG 852–853
Vis de jeu de douilles, assortiment . . . . . SFS 101
Vis, autotaraudeuse . . . . . SFS 105
Visière de sécurité . . . . . SFS 120
Visière, sécurité . . . . . SFS 120
Voiture-club, courroies . . . . . LG 272

W

Walker, adaptateurs de lame . . . . . LG 342
Walker, courroies . . . . . LG 325
Walker, lames . . . . . LG 576
Walker, roues anti-crevaison semi-pneumatiques . . . . . LG 1044–1046
Warner, embrayages à prise de force électrique . . . . . LG 733–741
Weed Eater, lames de coupe-bordures . . . . . LG 588
Weed Eater, pièces de taille-bordures et de souffleur . . . . . LG 1027
Wen / Wagner, applications de guide et chaîne . . . . . FOR 96
Western Auto, applications de pignon . . . . . FOR 203
Wheel Horse, filtres à air . . . . . LG 220
Wheel Horse, roues/roulettes anti-bascule . . . . . LG 1037–1042
Wheel Horse, silencieux . . . . . LG 810
Wisconsin Robin, filtres à air . . . . . LG 220–222
Wisconsin, câbles de commande . . . . . LG 720
Wisconsin, filtres à air . . . . . LG 220
Wisconsin, silencieux . . . . . LG 810
Woods, courroies . . . . . LG 325–330
Woods, embrayages à prise de force électrique . . . . . LG 733–741
Woods, lames . . . . . LG 577–579
Worx, applications de guide et chaîne . . . . . FOR 97
Wright Stander, arbres . . . . . LG 905
Wright Stander, courroies . . . . . LG 330–331
Wright Stander, embrayages à prise de force électrique . . . . . LG 733–741
Wright Stander, lames . . . . . LG 579–582
Wright Stander, roues anti-crevaison semi-pneumatiques . . . . . LG 1044–1046
Wypall, lingette préhumectée pour les mains . . . . . SFS 68

Y

Yamakoyo, carburateurs . . . . . LG 601
Yazoo, courroies . . . . . LG 297
Yazoo, roulements . . . . . LG 248

Z

Zama, carburateurs . . . . . LG 595
Zama, poires d'amorçage . . . . . LG 632
Zama, trousses de carburateur . . . . . LG 614–621
Zipper, lames . . . . . LG 583

120V Professional Series™, baterías . . . . . OPE 36
120V Professional Series™, bordeadora EG120VX . . . . . OPE 35
120V Professional Series™, cable de herramienta de bastón. . . . . OPE 36
120V Professional Series™, cargador C1600 . . . . . OPE 36
120V Professional Series™, cortasetos eléctrico BHT120VX . . . . . OPE 34
120V Professional Series™, desmalezadora ST120VX. . . . . OPE 33
120V Professional Series™, herramientas y accesorios . . . . . OPE 30–37
120V Professional Series™, mochila sopladora BL120VX . . . . . OPE 32
120V Professional Series™, mochilas de baterías . . . . . OPE 36
120V Professional Series™, pantalla de punto de venta. . . . . OPE 37

A

Abrazaderas de cables de plástico . . . . . LG 723
Abrazaderas para mangueras. . . . . LG 765
Abrazaderas, manguera . . . . . LG 765
Abridor para cadenas de motosierra de bolsillo. . . . . SFS 47
Abridor para cadenas de motosierra e impulsor de remachadora en la punta de la barra de la motosierra . . . . . SFS 45
Abridor para cadenas de motosierra modelo para banco. . . . . SFS 43
Abridor para cadenas de motosierra, de bolsillo . . . . . SFS 47
Abridor, para cadenas de motosierra modelo para banco . . . . . SFS 43
Absorbente de aceite Dri. . . . . SFS 68
Accesorios de acelerador de minimoto. . . . . LG 722
Accesorios de acelerador, surtido . . . . . SFS 101
Accesorios para afiladores de cadenas de motosierras . . . . . SFS 40–41
Accesorios para afiladores de cuchillas cortadoras de césped . . . . . SFS 62
Aceite hidráulico, SP anti desgaste . . . . . SFS 84
Aceite para motor de 2 tiempos . . . . . SFS 82
Aceite para motor de 2 tiempos Only One™ . . . . . SFS 19
Aceite sintético para motor a 2 tiempos, combustibles VP . . . . . SFS 83
Aceite, 2 tiempos . . . . . SFS 82
Aceite, 2 tiempos sintético, combustibles VP . . . . . SFS 83
Aceite, absorbente Dri . . . . . SFS 68
Aceite, barra y cadena de la sierra . . . . . SFS 19
Aceite, herramienta neumática . . . . . SFS 83
Aceite, hidráulico, SP anti desgaste. . . . . SFS 84
Aceite, Only One™ para motor de 2 tiempos . . . . . SFS 19
Acopladores. . . . . LG 793
Adaptador del volante de dirección, AYP . . . . . LG 939–940
Adaptador del volante de dirección, Husqvarna . . . . . LG 939–940
ADAPTADORES DE CUCHILLA . . . . . LG 340–342
Adaptadores de cuchilla, AYP . . . . . LG 340
Adaptadores de cuchilla, Bobcat . . . . . LG 340
Adaptadores de cuchilla, Husqvarna . . . . . LG 340
Adaptadores de cuchilla, MTD. . . . . LG 340–341
Adaptadores de cuchilla, Murray . . . . . LG 342
Adaptadores de cuchilla, Sears . . . . . LG 342
Adaptadores de cuchilla, Snapper . . . . . LG 342
Adaptadores de cuchilla, Walker . . . . . LG 342
Aerosol, limpiador de bornes de la batería. . . . . SFS 95
Aerosol, limpiador de frenos . . . . . SFS 94
Aerosol, protector de bornes de la batería. . . . . SFS 95
Afilador eléctrico de cadena para motosierra de 12-Volt Sure Sharp®. . . . . SFS 11
Afiladoras de cadenas automáticas. . . . . SFS 26–31
Afiladoras, cuchillas cortadoras de césped . . . . . SFS 58–63
Afiladores, cadena de motosierra. . . . . SFS 32–40
Afiladores, cuchillas cortadoras de césped . . . . . SFS 58–63
Agarradera de guante para palanca de arranque de lanzador de nieve . . . . . LG 851
Ahorrador de bomba, hidrolavadora, no aerosol . . . . . SFS 98
Aislador, borne de la batería. . . . . LG 743
Aislador, carburador Honda . . . . . LG 601
Ajustador, cadena de motosierra . . . . . SFS 47
Ajustadores de cadena, motosierras . . . . . LG 686–687
Alambre interno del cable del acelerador, rodillo . . . . . LG 721
Allis-Chalmers, aplicaciones para ruedas dentadas . . . . . FOR 187
Allis-Chalmers, cuchillas . . . . . LG 369
Alpina, aplicaciones para ruedas dentadas . . . . . FOR 187
AMF, bujes. . . . . LG 243
AMF, cojinetes. . . . . LG 243
AMF, correas . . . . . LG 259
AMF, ruedas. . . . . LG 1029–1046
AMF, ruedas intermedias . . . . . LG 824
AMF, ruedas/rodillos antidesbroce . . . . . LG 1037–1042
AMF, vástagos . . . . . LG 869
Anillos de pistones, Briggs & Stratton . . . . . LG 750
Anillos en E, empaques de exhibición. . . . . LG 799
Anteojos de seguridad . . . . . SFS 117–119
Anteojos de seguridad, soporte de exhibición . . . . . SFS 20
Anteojos protectores. . . . . SFS 117–119
Anteojos protectores, seguridad . . . . . SFS 117–119
Anteojos, seguridad . . . . . SFS 117–119
APLICACIONES DE BARRA Y CADENA. . . . . FOR 21–97
Aplicaciones de motosierras, barras y cadenas . . . . . FOR 21–97
Aplicador de lubricante del talón del neumático. . . . . SFS 68
Aplicador, lubricante del talón del neumático . . . . . SFS 68
Arandela, boquilla tanque de combustible . . . . . LG 767
Arandelas . . . . . SFS 106
Arandelas de acero en forma de copa . . . . . SFS 106
Arandelas de fibra . . . . . SFS 106
Arandelas del sistema de combustible . . . . . LG 763–764
Arandelas planas de acero . . . . . SFS 106
Arandelas, acero chato . . . . . SFS 106
Arandelas, acero en forma de copa. . . . . SFS 106
Arandelas, fibra. . . . . SFS 106
Ariens, barras raspadoras para lanzadores de nieve . . . . . LG 847
Ariens, bujes . . . . . LG 225–227
Ariens, bujes para lanzador de nieve . . . . . LG 853–854
Ariens, cojinetes . . . . . LG 225–227
Ariens, cojinetes para lanzador de nieve . . . . . LG 853–854
Ariens, conjuntos semineumáticos de ruedas sin pinchaduras . . . . . LG 1044–1046
Ariens, correas . . . . . LG 264–266
Ariens, cuchillas . . . . . LG 369–374
Ariens, cuchillas de cortadora de bordes . . . . . LG 584
Ariens, deslizaderas para lanzadores de nieve . . . . . LG 850
Ariens, deslizaderas para lanzadores de nieve . . . . . LG 850
Ariens, embragues eléctricos TDF . . . . . LG 733–741
Ariens, filtros de aire. . . . . LG 179
Ariens, interruptores de encendido . . . . . LG 942–945
Ariens, interruptores de seguridad . . . . . LG 947–948
Ariens, interruptores TDF . . . . . LG 946–947
Ariens, pernos de cortar para lanzadores de nieve . . . . . LG 852–853
Ariens, vástagos . . . . . LG 869
Arnés para cortadora, universal . . . . . LG 1027
Arnés universal para cortadora . . . . . LG 1027
Aros de pistones, Honda . . . . . LG 754
Aros de retención, surtido . . . . . SFS 103
Aros, Briggs & Stratton . . . . . LG 750
Aros, Honda. . . . . LG 754
Arrancador eléctrico, engranajes. . . . . LG 927–928
Arrancador eléctrico, escobillas . . . . . LG 927
Arrancador eléctrico, motores . . . . . LG 915–921
Arrancador eléctrico, piezas . . . . . LG 926–928
Arrancador eléctrico, propulsores . . . . . LG 926–927
Arrancador, anillo retenedor de trinquetes. . . . . LG 932
Arrancador, embrague, Briggs & Stratton . . . . . LG 929
Arrancador, interruptores . . . . . LG 942–945
Arrancador, juegos de reparación de trinquetes. . . . . LG 932
Arrancador, manija, agarradera de guante para lanzador de nieve . . . . . LG 851
Arrancador, manija, Briggs & Stratton . . . . . LG 929–930
Arrancador, manija, Honda . . . . . LG 930
Arrancador, manija, Stihl . . . . . LG 931
Arrancador, manija, Tecumseh . . . . . LG 931
Arrancador, motores . . . . . LG 915–921
Arrancador, motores, Briggs & Stratton . . . . . LG 915–916
Arrancador, motores, Honda . . . . . LG 918
Arrancador, motores, Kawasaki . . . . . LG 917–918
Arrancador, motores, Kohler . . . . . LG 918–919
Arrancador, motores, MTD. . . . . LG 921
Arrancador, motores, Onan . . . . . LG 921
Arrancador, motores, Tecumseh . . . . . LG 922
Arrancador, poleas, motosierras . . . . . LG 692
Arrancador, propulsores, arrancadores eléctricos . . . . . LG 926–928
Arrancador, resortes, motosierras . . . . . LG 693
Arrancador, sombreretes, Honda . . . . . LG 929
Arrancador, tornillos centrales, Honda. . . . . LG 929
Arrancador, trinquetes y resortes. . . . . LG 930–931
Arrancador, trinquetes y resortes, Briggs & Stratton . . . . . LG 930–931
Arrancador, trinquetes y resortes, Echo . . . . . LG 930–931
Arrancador, trinquetes y resortes, Honda . . . . . LG 930–931
Arrancador, trinquetes y resortes, Stihl . . . . . LG 930–931
Arrancador, troncos . . . . . LG 930–931
ARRANCADORES. . . . . LG 915–925
Arrancadores manuales . . . . . LG 922–925
Arrancadores manuales Mitsubishi. . . . . LG 924
Arrancadores manuales, Briggs & Stratton . . . . . LG 923
Arrancadores manuales, Honda. . . . . LG 922–923
Arrancadores manuales, Kawasaki. . . . . LG 924
Arrancadores manuales, Komatsu . . . . . LG 924
Arrancadores manuales, Mitsubishi . . . . . LG 924
Arrancadores manuales, MTD. . . . . LG 925
Arrancadores manuales, Robin . . . . . LG 925
Arrancadores manuales, Tecumseh . . . . . LG 922–925

2019 Índice Alfabético – ES

Arrancadores, arranque manual . . . . . LG 922–925
Arrancadores, eléctricos . . . . . LG 915–921
Arranque, llaves . . . . . LG 945–946
Arranque, manijas . . . . . LG 929–930
Arranque, solenoides . . . . . LG 729–730
ASIENTOS . . . . . LG 842–844
AYP, adaptador del volante de dirección . . . . . LG 939
AYP, adaptadores de cuchilla . . . . . LG 340
AYP, buje de dirección . . . . . LG 939–940
AYP, bujes . . . . . LG 227–228
AYP, cables de control . . . . . LG 701–703
AYP, cojinetes . . . . . LG 227–228
AYP, correas . . . . . LG 259–264
AYP, correas de bloqueo de la campana de la cortadora . . . . . LG 803
AYP, cuchillas . . . . . LG 374–382
AYP, deslizaderas para lanzadores de nieve . . . . . LG 850
AYP, eje de dirección . . . . . LG 940
AYP, embragues eléctricos TDF . . . . . LG 733–741
AYP, engranaje del sector de dirección . . . . . LG 939–940
AYP, enlaces de arrastre . . . . . LG 939
AYP, eslabones de dirección . . . . . LG 939
AYP, interruptores de encendido . . . . . LG 942–945
AYP, interruptores de seguridad . . . . . LG 947–948
AYP, interruptores TDF . . . . . LG 946–947
AYP, piezas para la suspensión de la plataforma de la cortadora . . . . . LG 804
AYP, poleas de propulsión . . . . . LG 834
AYP, ruedas . . . . . LG 1029–1046
AYP, ruedas intermedias . . . . . LG 824–825
AYP, ruedas/rodillos antidesbroce . . . . . LG 1037–1042
AYP, soporte del eje de dirección . . . . . LG 939
AYP, vástagos . . . . . LG 870–876

B

Barra de guía CCS300 . . . . . OPE 25
Barra de guía CS1500 . . . . . OPE 25
Barra de guía CS250 . . . . . OPE 25
Barra de guía PS250 . . . . . OPE 25
Barras de tracción . . . . . LG 793
BARRAS GUÍA . . . . . FOR 148–179
BARRAS GUÍA - Montajes de la sierra . . . . . FOR 171–177
Barras guía de repuesto para OPE . . . . . OPE 25
Barras guía para OPE . . . . . OPE 25
Barras guía, familias de barras Oregon® . . . . . FOR 150–169
Barras guía, sistema de numeración de partes . . . . . FOR 152–153
Barras raspadoras, lanzadores de nieve . . . . . LG 847–849
Base integrada para troncos . . . . . OPE 46
Base para troncos . . . . . OPE 46
Base, afiladores de cadenas de motosierras . . . . . SFS 41
Batería, aislamiento de la terminal . . . . . LG 743
Batería, borne de plomo . . . . . LG 743
Batería, cables . . . . . LG 744
Batería, cargador . . . . . LG 743
Batería, cargadores . . . . . OPE 10
Batería, cubierta de la terminal . . . . . LG 743
Batería, extremo del cable . . . . . LG 744
Batería, hidrómetro . . . . . LG 744
Batería, lengüeta del cable . . . . . LG 743
Batería, paquetes . . . . . OPE 10
Batería, rociador para limpieza del borne . . . . . SFS 95
Batería, rociador para protección del borne . . . . . SFS 95
Batería, Tender . . . . . LG 743
Baterías . . . . . LG 744
Baterías, 120V Professional Series™ . . . . . OPE 36
Befco, cuchillas . . . . . LG 382
Better Outdoors, cuchillas . . . . . LG 383
Bidones de combustible . . . . . SFS 86–88
Bidones de combustible sólo para Canadá . . . . . SFS 90–91
Bidones de combustible, sólo Canadá . . . . . SFS 90–91
Bidones de seguridad, desechos aceitosos, polietileno . . . . . SFS 88
Bidones para aceite usado de seguridad, polietileno . . . . . SFS 88
Bidones, combustible . . . . . SFS 86–88
Bielas, Briggs & Stratton . . . . . LG 750
Bielas, Briggs & Stratton . . . . . LG 750
Bielas, Honda . . . . . LG 755
Bielas, Honda . . . . . LG 755
Big Bee, cuchillas . . . . . LG 384
Black & Decker, aplicaciones de barras y cadenas . . . . . FOR 22
Black & Decker, cuchillas de cortadora de bordes . . . . . LG 584
Bobcat, adaptadores de cuchilla . . . . . LG 340
Bobcat, bujes . . . . . LG 228–230
Bobcat, cables de control . . . . . LG 703
Bobcat, cojinetes . . . . . LG 228–230
Bobcat, conjuntos de ruedas neumáticas . . . . . LG 1044–1046
Bobcat, conjuntos semineumáticos de ruedas sin pinchaduras . . . . . LG 1044–1046
Bobcat, correas . . . . . LG 267–269
Bobcat, cuchillas . . . . . LG 384–388
Bobcat, embragues eléctricos TDF . . . . . LG 733–741
Bobcat, filtros de combustible en el conducto . . . . . LG 774–776
Bobcat, interruptores de seguridad . . . . . LG 947–948
Bobcat, interruptores TDF . . . . . LG 946–947
Bobcat, poleas de propulsión . . . . . LG 835
Bobcat, rótulas . . . . . LG 938–939
Bobcat, ruedas . . . . . LG 1029–1046
Bobcat, ruedas intermedias . . . . . LG 825–826
Bobcat, ruedas/rodillos antidesbroce . . . . . LG 1037–1042
Bobcat, vástagos . . . . . LG 874–875
Bobinas de encendido . . . . . LG 784–787
Bobinas de encendido, Briggs & Stratton . . . . . LG 784–787
Bobinas de encendido, Honda . . . . . LG 784–787
Bobinas de encendido, Husqvarna . . . . . LG 784–787
Bobinas de encendido, Kohler . . . . . LG 784–787
Bobinas de encendido, Lawn-Boy . . . . . LG 784–787
Bobinas de encendido, Robin . . . . . LG 784–787
Bobinas de encendido, Stihl . . . . . LG 784–787
Bobinas de encendido, Tecumseh . . . . . LG 784–787
Bobinas de magneto . . . . . LG 784–787
Bobinas, encendido . . . . . LG 784–787
Bobinas, magneto . . . . . LG 784–787
Bolens, cuchillas . . . . . LG 388–390
Bolens, ruedas/rodillos antidesbroce . . . . . LG 1037–1042
Bolsa de herramientas . . . . . OPE 23
BOLSAS PARA CÉSPED . . . . . LG 781–782
Bomba de combustible . . . . . LG 767
Bomba de sifón, combustibles VP . . . . . SFS 81
Bomba, combustible . . . . . LG 767
Boquillas de combustible . . . . . LG 765
Boquillas de engrase, empaques de exhibición . . . . . LG 800
Boquillas de engrase, surtido . . . . . SFS 101
Boquillas, combustible . . . . . LG 765–766
Bordeadora EG120VX, 120V Professional Series™ . . . . . OPE 35
Bordeadora EG600, multiaccesorios sin cable . . . . . OPE 13
Borne de la batería de plomo . . . . . LG 743
Botas de caucho para uso en bosques . . . . . SFS 113
Botas de piel de primera calidad . . . . . SFS 113
Botas de piel, primera calidad . . . . . SFS 113
Botas, caucho para uso en bosques . . . . . SFS 113
Botas, piel de primera calidad . . . . . SFS 113
Botón de conducto de cable del acelerador . . . . . LG 721
Brazo de dirección, MTD . . . . . LG 939
Brazos del elevador . . . . . LG 794
Brazos estabilizadores . . . . . LG 793
Briggs & Stratton, anillos . . . . . LG 750
Briggs & Stratton, anillos de pistones . . . . . LG 750
Briggs & Stratton, arrancadores manuales . . . . . LG 923
Briggs & Stratton, bielas . . . . . LG 750
Briggs & Stratton, bielas . . . . . LG 750
Briggs & Stratton, bobinas de arranque . . . . . LG 784–787
Briggs & Stratton, carburadores . . . . . LG 596
Briggs & Stratton, Cubas del flotador del carburador . . . . . LG 625
Briggs & Stratton, diafragmas del carburador . . . . . LG 622–623
Briggs & Stratton, embrague del arrancador . . . . . LG 929
Briggs & Stratton, empaquetaduras . . . . . LG 745–749
Briggs & Stratton, engranajes del arrancador eléctrico . . . . . LG 927–928
Briggs & Stratton, escobillas del arrancador eléctrico . . . . . LG 927
Briggs & Stratton, filtros de aceite . . . . . LG 814–819
Briggs & Stratton, filtros de aire de espuma . . . . . LG 185–189
Briggs & Stratton, filtros de aire de papel . . . . . LG 179–185
Briggs & Stratton, filtros de combustible en el conducto . . . . . LG 774–776
Briggs & Stratton, flotadores del carburador . . . . . LG 624
Briggs & Stratton, juegos de carburadores . . . . . LG 602–604
Briggs & Stratton, juegos de empaquetaduras . . . . . LG 745
Briggs & Stratton, manija de arranque . . . . . LG 930
Briggs & Stratton, motores de arranque . . . . . LG 915–916
Briggs & Stratton, peras cebadoras . . . . . LG 629–632
Briggs & Stratton, platinos y condensador . . . . . LG 789
Briggs & Stratton, poleas del arranque manual . . . . . LG 933
Briggs & Stratton, propulsores del arrancador eléctrico . . . . . LG 926–927
Briggs & Stratton, reguladores de voltaje . . . . . LG 731
Briggs & Stratton, resortes del arranque manual . . . . . LG 927
Briggs & Stratton, sellos . . . . . LG 749
Briggs & Stratton, sellos de aceite . . . . . LG 749
Briggs & Stratton, silenciadores . . . . . LG 806–807

Briggs & Stratton, tabla de referencia rápida . . . LG 1048–1071
Briggs & Stratton, tapas de combustible . . . LG 770
Briggs & Stratton, tapón de llenado de aceite . . . LG 750
Briggs & Stratton, trinquetes y resortes de arranque . . . LG 930–931
Briggs & Stratton, válvulas de aguja de admisión del carburador . . . LG 628
Broche de cortocircuito para bujías . . . LG 867
Broche de cortocircuito, bujías . . . LG 867
Buje del depósito de combustible . . . LG 767
Bujes EHP . . . LG 227–228
Bujes K&S . . . LG 238
Bujes para maquinaria . . . SFS 106
Bujes Scag . . . LG 244
Bujes Simplicity . . . LG 244–245
Bujes Snapper . . . LG 245–246
Bujes, AMF . . . LG 243
Bujes, Ariens . . . LG 225–227
Bujes, AYP . . . LG 227–228
Bujes, Bobcat . . . LG 228–230
Bujes, Bunton . . . LG 230
Bujes, Cub Cadet . . . LG 231-232
Bujes, EHP . . . LG 227–228
Bujes, Encore . . . LG 232
Bujes, Exmark . . . LG 233-234
Bujes, Grasshopper . . . LG 234–235
Bujes, Gravely . . . LG 235
Bujes, John Deere . . . LG 237–238
Bujes, K&S . . . LG 238
Bujes, maquinaria . . . SFS 106
Bujes, MTD . . . LG 239–242
Bujes, Murray . . . LG 242–243
Bujes, Noma . . . LG 243
Bujes, Roper . . . LG 227–228
Bujes, Sears . . . LG 227–228
BUJÍAS . . . LG 864–867
Bunton, bujes . . . LG 230
Bunton, cojinetes . . . LG 230
Bunton, correas . . . LG 269–270
Bunton, cuchillas . . . LG 390–392
Bunton, embragues eléctricos TDF . . . LG 733–741
Bunton, interruptores de seguridad . . . LG 947–948
Bunton, interruptores TDF . . . LG 946–947
Bunton, ruedas . . . LG 1029–1046
Bunton, ruedas intermedias . . . LG 826–827
Bunton, vástagos . . . LG 874–875
Bush Hog, correas . . . LG 270–271
Bush Hog, cuchillas . . . LG 392–394
Bush Hog, vástagos . . . LG 876–877

C

Cabezal de cortadora para OPE . . . OPE 26
Cabezal de cortadoras de carga rápida . . . OPE 26
Cabezal de cortadoras Gator® SpeedLoad™ . . . LG 968–978
Cabezal de corte ST275 . . . OPE 26
Cabezal eléctrico PH600, multiaccesorios sin cable . . . OPE 12
Cabezales de cortadora, alimentación manual . . . LG 995
Cabezales de cortadora, alimentación por impacto . . . LG 985–994
Cabezales de cortadora, cabezal cortador Lightning Load™ . . . LG 985
Cabezales de cortadora, cabezal cortador Pivotrim™ . . . LG 996
Cabezales de cortadora, cabezal cortador Speed-Feed™ . . . LG 986–987
Cabezales de cortadora, cabezal de corte de línea fija . . . LG 996
Cabezales de cortadora, cabezal Kwik Loader™ Jet-Fit Express . . . LG 995
Cabezales de cortadora, cabezales Jet Fit™ . . . LG 995
Cabezales de cortadora, Gator® SpeedLoad™ . . . LG 968–978
Cabezales de cortadora, Magnum Gatorhead™ de 4" de alto rendimiento . . . LG 989
Cabezales de cortadora, Magnum Gatorhead™ de 6" de alto rendimiento . . . LG 990
Cabezales de cortadora, repuesto para Stihl 25-2 Auto Cut . . . LG 988
Cabezales de cortadora, tabla de aplicación . . . LG 997–1013
Cabezales largos, Honda . . . LG 755
Cable de herramienta de bastón, 120V Professional Series™ . . . OPE 36
Cable principal . . . LG 742
Cable, principal . . . LG 742
Cables de cebador . . . LG 701–720
CABLES DE CONTROL . . . LG 699–723
Cables de control auto propulsados . . . LG 701–720
Cables de control de presión y tracción . . . LG 720–721
Cables de control para propulsión . . . LG 701–720
Cables de control, AYP . . . LG 701–703
Cables de control, Bobcat . . . LG 703
Cables de control, Cub Cadet . . . LG 703–708
Cables de control, Dixie Chopper . . . LG 708
Cables de control, Excel . . . LG 708
Cables de control, Gravely . . . LG 708
Cables de control, Honda . . . LG 708–709
Cables de control, Hustler . . . LG 708
Cables de control, John Deere . . . LG 709
Cables de control, McClane . . . LG 709
Cables de control, MTD . . . LG 710–715
Cables de control, Murray . . . LG 715–717
Cables de control, presión y tracción . . . LG 720–721
Cables de control, Scag . . . LG 717–718
Cables de control, Snapper . . . LG 718–719
Cables de control, Toro . . . LG 719–720
Cables de control, universales . . . LG 699–701
Cables de control, Wisconsin . . . LG 720
Cables de freno . . . LG 701–720
Cables de seguridad de zona . . . LG 701–720
Cables del acelerador . . . LG 701–720
Cables para acoplamiento de plataforma . . . LG 701–720
Cables TDF . . . LG 701–720
Cables, acelerador . . . LG 701–720
Cables, acoplamiento de plataforma . . . LG 701–720
Cables, batería . . . LG 744
Cables, cebador . . . LG 701–720
Cables, control . . . LG 701–720
Cables, control autopropulsado . . . LG 701–720
Cables, control de accionamiento . . . LG 701–720
Cables, control de barrena de lanzador de nieve . . . LG 701–720
Cables, control de dirección de lanzador de nieve . . . LG 701–720
Cables, control de tubo de descarga de lanzador de nieve . . . LG 701–720
Cables, freno . . . LG 701–720
Cables, TDF (Toma De Fuerza) . . . LG 701–720
CADENA DE MOTOSIERRA . . . FOR 103–147
Cadena de motosierra de poste inalámbrica PS250 . . . OPE 25
Cadena de motosierra, afiladores automáticos de cadenas . . . SFS 32–40
Cadena de motosierra, características . . . FOR 108–109
Cadena de rodillo . . . LG 676
Cadena de rodillo, eslabones de ajuste . . . LG 676
Cadena de rodillo, eslabones de conexión . . . LG 676
Cadena de rodillo, medio eslabones . . . LG 676
Cadena para motosierra de poste . . . OPE 20
Cadena, cadena de motosierra . . . FOR 103–147
Cadena, eslabones de ajuste de rodillo . . . LG 676
Cadena, eslabones de conexión de rodillo . . . LG 676
Cadena, medios eslabones de rodillo . . . LG 676
Cadenas para neumáticos . . . LG 965
Cadenas, neumático . . . LG 965
Cajas para depósito de piezas . . . SFS 21
Cajas, cuchillas cortadoras de césped . . . SFS 21
Cajas, depósito de piezas . . . SFS 21
Calibrador de espesores . . . SFS 65
Calibrador, espesores . . . SFS 65
Cámaras para neumáticos . . . LG 956–957
Cámaras, neumáticos . . . LG 956–957
Cambiador de neumáticos . . . SFS 69
Cambiador de neumáticos Oregon® . . . SFS 69
Carburadores completos para reemplazo . . . LG 595–601
Carburadores Walbro . . . LG 595
CARBURADORES Y PIEZAS DE CARBURADORES . . . LG 594–674
Carburadores Yamakoyo . . . LG 601
Carburadores, Briggs & Stratton . . . LG 596
Carburadores, completos . . . LG 595–601
Carburadores, Honda . . . LG 596–597
Carburadores, Robin . . . LG 596
Carburadores, Tecumseh . . . LG 598–601
Carburadores, Tillotson . . . LG 595
Carburadores, Walbro . . . LG 595
Carburadores, Yamakoyo . . . LG 601
Carburadores, Zama . . . LG 595
Cargador C1600, 120V Professional Series™ . . . OPE 36
Cargador de baterías C600 . . . OPE 10
Cargador de baterías rápido . . . OPE 10
Cargador de baterías rápido C750 . . . OPE 10
Cargador, batería . . . LG 743
Caroni, cuchillas . . . LG 395
Caroni, vástagos . . . LG 877
Cartuchos de grasa . . . SFS 12
Casco de seguridad . . . SFS 112
Casco para lluvia . . . SFS 115
Casco, seguridad . . . SFS 112
Catálogo Oregon® . . . SFS 23
Catálogo, Oregon® . . . SFS 23
Cebadores . . . LG 629–632

2019 Índice Alfabético – ES

Cedazos para el combustible . . . . . LG 627
Chaparreras . . . . . SFS 114
Chaqueta para lluvia . . . . . SFS 115
Chavetas de acoplador, empaques de exhibición . . . . . LG 799
Chavetas de sujeción . . . . . LG 795
Chicago Electric, aplicaciones de barra y cadena . . . . . FOR 22
Cierre, conducto de combustible . . . . . LG 766–767
Cierres del conducto del combustible . . . . . LG 766–767
Cilindros amortiguadores . . . . . LG 695
Cinta de freno, Scag . . . . . LG 698
Cinta de freno, Snapper . . . . . LG 698
Clavijas . . . . . LG 803
Clavijas . . . . . LG 794
Club Car, correas . . . . . LG 272
Cojinete de rodillo cónico . . . . . LG 223
Cojinete de rodillo enjaulado . . . . . LG 223
Cojinetes de bolas . . . . . LG 223–224
Cojinetes de bolas Oregon® Magnum . . . . . LG 224
Cojinetes de ruedas . . . . . LG 223–224
Cojinetes de ruedas bridadas . . . . . LG 224
Cojinetes del extremo de la biela . . . . . LG 804
Cojinetes EHP . . . . . LG 227–228
Cojinetes K&S . . . . . LG 238
COJINETES Y RODAMIENTOS . . . . . LG 223–249
Cojinetes, AMF . . . . . LG 243
Cojinetes, Ariens . . . . . LG 225–227
Cojinetes, AYP . . . . . LG 227–228
Cojinetes, Bobcat . . . . . LG 228–230
Cojinetes, bola . . . . . LG 223–224
Cojinetes, Bunton . . . . . LG 230
Cojinetes, Cub Cadet . . . . . LG 231-232
Cojinetes, Dixon . . . . . LG 232
Cojinetes, EHP . . . . . LG 227–228
Cojinetes, Encore . . . . . LG 232
Cojinetes, Exmark . . . . . LG 233-234
Cojinetes, extremo de la biela . . . . . LG 804
Cojinetes, Ferris . . . . . LG 234
Cojinetes, Grasshopper . . . . . LG 234–235
Cojinetes, Gravely . . . . . LG 235
Cojinetes, Honda . . . . . LG 235
Cojinetes, Hustler . . . . . LG 236
Cojinetes, Jacobsen . . . . . LG 236–237
Cojinetes, John Deere . . . . . LG 237–238
Cojinetes, K&S . . . . . LG 238
Cojinetes, lanzadores de nieve . . . . . LG 853–855
Cojinetes, Lawn-Boy . . . . . LG 238–239
Cojinetes, Little Wonder . . . . . LG 239
Cojinetes, McLane . . . . . LG 239
Cojinetes, MTD . . . . . LG 239–242
Cojinetes, Murray . . . . . LG 242–243
Cojinetes, Noma . . . . . LG 243
Cojinetes, Oregon® Magnum, bola . . . . . LG 224
Cojinetes, rodillo cónico . . . . . LG 223
Cojinetes, rodillo enjaulado . . . . . LG 223
Cojinetes, Roper . . . . . LG 227–228
Cojinetes, rueda . . . . . LG 223–224
Cojinetes, rueda bridada . . . . . LG 224
Cojinetes, Scag . . . . . LG 244
Cojinetes, Sears . . . . . LG 227–228
Cojinetes, Simplicity . . . . . LG 244–245
Cojinetes, Snapper . . . . . LG 245–246
Cojinetes, Toro . . . . . LG 247
Cojinetes, Yazoo . . . . . LG 248
Colector de drenaje de aceite . . . . . SFS 67
Colector de drenaje, aceite . . . . . SFS 67
Collares de eje, empaques de exhibición . . . . . LG 801
Combinaciones de motosierras, barras y cadenas . . . . . FOR 100–101
Combustible Fix-It, combustibles VP . . . . . SFS 81
Combustible sin etanol, VP Fuels . . . . . SFS 79–81
Combustibles VP, bomba de sifón . . . . . SFS 81
Combustibles VP, combustible Fix-it . . . . . SFS 81
Combustibles VP, combustible libre de etanol . . . . . SFS 79–81
Combustibles VP, pico de combustible . . . . . SFS 81
Comet, correas . . . . . LG 272
Compresor de anillo . . . . . SFS 66
Compresor de anillo de pistón . . . . . SFS 66
Compresor de resorte para válvula . . . . . SFS 66
Compresor, anillos . . . . . SFS 66
Compresor, resorte de válvula . . . . . SFS 66
Comprobantes de mantenimiento . . . . . SFS 21
Comprobantes, mantenimiento . . . . . SFS 21
Conducto de combustible . . . . . LG 761–763
Conducto de combustible Oregon® . . . . . LG 761
Conducto de combustible Tygon® . . . . . LG 761
CONDUCTO DE COMBUSTIBLE Y ACCESORIOS. . . . . LG 761–780
Conducto de combustible, Oregon® . . . . . LG 761
Conducto de combustible, Tygon® . . . . . LG 761
Conducto del cable externo del acelerador, rodillo . . . . . LG 721
Conducto, combustible . . . . . LG 761–763
Conductos de combustible, motosierras . . . . . LG 688–690
Conectores y bornes eléctricos, surtido . . . . . SFS 100
Conjuntos de ruedas neumáticas . . . . . LG 1044–1046
Conjuntos del sistema de combustible . . . . . LG 764–765
Conjuntos semineumáticos de ruedas sin pinchaduras . . . . . LG 1044–1046
Corona Clipper, aplicaciones de barra y cadena . . . . . FOR 23
Correa del tanque de combustible, Scag . . . . . LG 698
Correa para cortadora, universal . . . . . LG 1027
Correa universal para cortadora . . . . . LG 1027
CORREAS. . . . . LG 250–339
Correas Bad Boy . . . . . LG 266–267
Correas de bloqueo de la campana de la cortadora . . . . . LG 803
Correas de bloqueo, campanas de cortadora . . . . . LG 803
Correas de cuerda de aramida de primera calidad . . . . . LG 334–335
Correas industriales de cuerda de poliéster . . . . . LG 336–337
Correas Manco . . . . . LG 300
Correas Polaris ATV . . . . . LG 310
Correas, AMF . . . . . LG 259
Correas, Ariens . . . . . LG 264–266
Correas, AYP . . . . . LG 259–264
Correas, Bad Boy . . . . . LG 266–267
Correas, Bobcat . . . . . LG 267–269
Correas, Bunton . . . . . LG 269–270
Correas, Bush Hog . . . . . LG 270–271
Correas, Club Car . . . . . LG 272
Correas, Comet . . . . . LG 272
Correas, Country Clipper . . . . . LG 272
Correas, Craftsman . . . . . LG 315
Correas, Cub Cadet . . . . . LG 273–277
Correas, cuerda de aramida de primera calidad . . . . . LG 334–335
Correas, cuerda de poliéster industrial . . . . . LG 336–337
Correas, Dixie Chopper . . . . . LG 277
Correas, Dixon . . . . . LG 278
Correas, Dynamark . . . . . LG 278
Correas, E-Z Roll . . . . . LG 278
Correas, Encore . . . . . LG 278
Correas, Excel . . . . . LG 279
Correas, Exmark . . . . . LG 279–283
Correas, EZ-Go . . . . . LG 283
Correas, Ferris . . . . . LG 283–284
Correas, Grasshopper . . . . . LG 284–285
Correas, Gravely . . . . . LG 285–287
Correas, Great Dane . . . . . LG 287–288
Correas, Honda . . . . . LG 288
Correas, Husqvarna . . . . . LG 288–292
Correas, Hustler . . . . . LG 279
Correas, John Deere . . . . . LG 292–297
Correas, Kees . . . . . LG 297
Correas, King Kutter . . . . . LG 298
Correas, Kubota . . . . . LG 298–299
Correas, lanzador de nieve . . . . . LG 862–863
Correas, Lawn-Boy . . . . . LG 299
Correas, Lesco . . . . . LG 299
Correas, Little Wonder . . . . . LG 300
Correas, Manco . . . . . LG 300
Correas, Massey Fergunson . . . . . LG 300
Correas, McClane . . . . . LG 300
Correas, MTD . . . . . LG 300–306
Correas, Murray . . . . . LG 306–309
Correas, Noma . . . . . LG 309–310
Correas, Partner . . . . . LG 310
Correas, Polaris ATV . . . . . LG 310
Correas, Poulan Pro . . . . . LG 311
Correas, Power Trim . . . . . LG 311
Correas, Roper . . . . . LG 311–312
Correas, Scag . . . . . LG 312–314
Correas, Scotts . . . . . LG 315
Correas, Sears . . . . . LG 315
Correas, sierras abrasivas . . . . . LG 684
Correas, Simplicity . . . . . LG 316
Correas, Snapper . . . . . LG 316–319
Correas, Stihl . . . . . LG 320
Correas, Toro . . . . . LG 320–323
Correas, Troy-Bilt . . . . . LG 324
Correas, Walker . . . . . LG 325

Correas, Woods . . . LG 325–330
Correas, Wright Stander . . . LG 330–331
Correas, Yazoo . . . LG 297
Cortador de arbustos HT250, eléctrico inalámbrico . . . OPE 21
Cortador, tanza de cortadora de bordes . . . LG 985
Cortador/bordeador . . . OPE 19
Cortador/bordeador ST275 . . . OPE 19
Cortador/bordeador, ST275 Oregon® 40V MAX . . . OPE 19
Cortadora de arbustos, HT250 Oregon® 40V MAX inalámbrica . . . OPE 21
Cortadora de césped comercial, espaciadores y bujes . . . LG 697
Cortadora de césped comercial, motores de ruedas . . . LG 696
Cortadora de césped comercial, piezas para ruedas pivotantes . . . LG 694–695
Cortadoras de césped, accesorios para afiladoras de cuchillas . . . SFS 62
Cortadoras de césped, afiladoras de cuchillas . . . SFS 58–63
Cortadoras de césped, afiladores de cuchillas . . . SFS 58–63
Cortadoras de césped, asientos . . . LG 842–844
Cortadoras de césped, cajas de cuchillas . . . SFS 21
Cortadoras de césped, equilibradores de cuchillas . . . SFS 63
Cortadoras de césped, herramienta para nivelación de plataforma . . . SFS 63
Cortadoras de césped, piezas de repuesto para afiladoras de cuchillas . . . SFS 62
Cortadoras de césped, rampas . . . SFS 64
Cortadoras de césped, sulkies . . . SFS 77–78
Cortadoras de troncos, cuña de 4 lados . . . OPE 47
Cortasetos eléctrico BHT120VX, 120V Professional Series™ . . . OPE 34
Cortasetos eléctrico HT600, multiaccesorios sin cable . . . OPE 13
Corte, cadena de la motosierra . . . FOR 103–147
Country Clipper, correas . . . LG 272
Country Clipper, cuchillas . . . LG 395–397
Craftsman, correas . . . LG 315
Craftsman, cuchillas . . . LG 397–404
Cub Cadet, aplicaciones de barra y cadena . . . FOR 25
Cub Cadet, aplicaciones de rueda dentada . . . FOR 187
Cub Cadet, arrancadores de 120V para lanzadores de nieve . . . LG 861
Cub Cadet, arrancadores manuales para lanzadores de nieve . . . LG 860–861
Cub Cadet, bujes . . . LG 231-232
Cub Cadet, bujes para lanzadores de nieve . . . LG 854–855
Cub Cadet, cables de control . . . LG 703–708
Cub Cadet, cables de control para lanzadores de nieve . . . LG 856–859
Cub Cadet, cebador para lanzadores de nieve . . . LG 860
Cub Cadet, cojinetes . . . LG 231-232
Cub Cadet, cojinetes para lanzadores de nieve . . . LG 854–855
Cub Cadet, correas . . . LG 273–277
Cub Cadet, cuchillas . . . LG 404–412
Cub Cadet, embragues eléctricos TDF . . . LG 733–741
Cub Cadet, engranaje de bronce de lanzadores de nieve . . . LG 856
Cub Cadet, gatillo de control de dirección para lanzadores de nieve . . . LG 856
Cub Cadet, guarda de brida de tubo de descarga para lanzadores de nieve . . . LG 855
Cub Cadet, guía basculante de tubo de descarga para lanzadores de nieve . . . LG 856
Cub Cadet, interruptores de encendido . . . LG 942–945
Cub Cadet, interruptores de seguridad . . . LG 947–948
Cub Cadet, interruptores TDF . . . LG 946–947
Cub Cadet, juegos de carburador para lanzadores de nieve . . . LG 859
Cub Cadet, juegos de carburadores . . . LG 604–605
Cub Cadet, leva de bloqueo del embrague para lanzadores de nieve . . . LG 856
Cub Cadet, llaves de encendido para lanzadores de nieve . . . LG 861
Cub Cadet, placa de bloqueo para lanzadores de nieve . . . LG 856
Cub Cadet, placas de barrido para lanzadores de nieve . . . LG 848
Cub Cadet, poleas de propulsión . . . LG 837
Cub Cadet, rueda para lanzadores de nieve . . . LG 856
Cub Cadet, ruedas intermedias . . . LG 826–827
Cub Cadet, ruedas/rodillos antidesbroce . . . LG 1037–1042
Cub Cadet, silenciadores . . . LG 807
Cub Cadet, vástagos . . . LG 878–883
Cuba de sedimentos . . . LG 765
Cuba del filtro . . . LG 765
Cubas del flotador del carburador . . . LG 625
Cubas del flotador del carburador, Briggs & Stratton . . . LG 625
Cubas del flotador del carburador, Honda . . . LG 625
Cubas del flotador del carburador, Tecumseh . . . LG 625
Cubas del flotador, carburadores . . . LG 625
Cubierta del tractor-podadora . . . LG 803
Cubierta, borne de la batería . . . LG 743
Cubierta, tractor-podadora . . . LG 803
Cubiertas, barras de motosierras . . . SFS 13
Cuchillas cortadoras de matorrales . . . LG 1014
Cuchillas cortadoras de matorrales, herramientas de limar . . . LG 1015
Cuchillas de cortadora de bordes, universal . . . LG 588–589
CUCHILLAS DE CORTADORAS DE BORDES . . . LG 584–590
Cuchillas de cortadoras de bordes Weed Eater . . . LG 588
Cuchillas de cortadoras de bordes, Ariens . . . LG 584
Cuchillas de cortadoras de bordes, Black & Decker . . . LG 584
Cuchillas de cortadoras de bordes, Earth Quake . . . LG 584
Cuchillas de cortadoras de bordes, Echo . . . LG 584
Cuchillas de cortadoras de bordes, Homelite . . . LG 584
Cuchillas de cortadoras de bordes, Husqvarna . . . LG 585
Cuchillas de cortadoras de bordes, Jacobsen . . . LG 585
Cuchillas de cortadoras de bordes, John Deere . . . LG 585
Cuchillas de cortadoras de bordes, Kawasaki . . . LG 585
Cuchillas de cortadoras de bordes, Lawn-Boy . . . LG 585
Cuchillas de cortadoras de bordes, Lesco . . . LG 585
Cuchillas de cortadoras de bordes, Little Wonder . . . LG 585
Cuchillas de cortadoras de bordes, Maruyama . . . LG 586
Cuchillas de cortadoras de bordes, McClane . . . LG 586
Cuchillas de cortadoras de bordes, McCulloch . . . LG 586
Cuchillas de cortadoras de bordes, MTD . . . LG 586
Cuchillas de cortadoras de bordes, Power Trim . . . LG 586
Cuchillas de cortadoras de bordes, RedMax . . . LG 587
Cuchillas de cortadoras de bordes, Ryobi . . . LG 587
Cuchillas de cortadoras de bordes, Sears . . . LG 587
Cuchillas de cortadoras de bordes, Shindaiwa . . . LG 587
Cuchillas de cortadoras de bordes, Stihl . . . LG 587
Cuchillas de cortadoras de bordes, Tanaka . . . LG 588
Cuchillas de cortadoras de bordes, Troy-Bilt . . . LG 588
Cuchillas de cortadoras de bordes, Weed Eater . . . LG 588
Cuchillas de desbroce . . . LG 368
Cuchillas de desmalezadora . . . LG 368
Cuchillas de la sierra de desbroce . . . LG 1014
CUCHILLAS PARA CORTADORAS DE ARBUSTOS . . . LG 783
CUCHILLAS UNIVERSALES . . . LG 368
Cuchillas, Allis-Chalmers . . . LG 369
Cuchillas, Ariens . . . LG 369–374
Cuchillas, AYP . . . LG 374–382
Cuchillas, barras guía para motosierras . . . FOR 148–179
Cuchillas, Befco . . . LG 382
Cuchillas, Better Outdoors . . . LG 383
Cuchillas, Big Bee . . . LG 384
Cuchillas, Billy Goat . . . LG 590
Cuchillas, Bluebird . . . LG 590
Cuchillas, Bobcat . . . LG 384–388
Cuchillas, Bolens . . . LG 388–390
Cuchillas, Bunton . . . LG 390–392
Cuchillas, Bush Hog . . . LG 392–394
Cuchillas, Caroni . . . LG 395
Cuchillas, cortadora de bordes . . . LG 584–590
Cuchillas, cortadoras de arbustos . . . LG 783
Cuchillas, cortadoras de césped . . . LG 369–583
Cuchillas, cortadoras de matorrales . . . LG 1014
Cuchillas, cortadoras de matorrales y pasto . . . LG 1014
Cuchillas, Country Clipper . . . LG 395–397
Cuchillas, Craftsman . . . LG 397–404
Cuchillas, Cub Cadet . . . LG 404–412
Cuchillas, desbroce . . . LG 368
Cuchillas, desmalezadora . . . LG 368
Cuchillas, Dixie Chopper . . . LG 413–416
Cuchillas, Dixon . . . LG 416–428
Cuchillas, DR . . . LG 428–430
Cuchillas, DR . . . LG 428–430
Cuchillas, Dynamow . . . LG 430
Cuchillas, Encore . . . LG 431–434
Cuchillas, Everide . . . LG 434
Cuchillas, Excel . . . LG 470–475
Cuchillas, Exmark . . . LG 434–443
Cuchillas, Ferris . . . LG 443–446
Cuchillas, Ford/New Holland . . . LG 447
Cuchillas, Giant Vac . . . LG 447–448
Cuchillas, Goodall . . . LG 390–392
Cuchillas, Grasshopper . . . LG 448–450
Cuchillas, Gravely . . . LG 450–456
Cuchillas, Great Dane . . . LG 456–457
Cuchillas, Honda . . . LG 457–458
Cuchillas, Huskee . . . LG 458
Cuchillas, Husqvarna . . . LG 458–470
Cuchillas, Hustler . . . LG 470–475
Cuchillas, Ingersoll . . . LG 475
Cuchillas, Jacobsen . . . LG 476–482
Cuchillas, John Deere . . . LG 482–493
Cuchillas, Kees . . . LG 494–497
Cuchillas, King Kutter . . . LG 497
Cuchillas, Kubota . . . LG 497–501
Cuchillas, Land Pride . . . LG 501–503
Cuchillas, Lastec . . . LG 503–504
Cuchillas, Lawn-Boy . . . LG 505
Cuchillas, Lesco . . . LG 505–508
Cuchillas, Massey Fergunson . . . LG 508–511

2019 Índice Alfabético – ES

Cuchillas, MTD . . . LG 512–521
Cuchillas, Murray . . . LG 522–528
Cuchillas, Poulan . . . LG 529–533
Cuchillas, Power Trim . . . LG 586
Cuchillas, Redhawk . . . LG 534–535
CUCHILLAS, repuestos idénticos del fabricante original (OEM) **LG 369–583**
Cuchillas, Scag . . . LG 535–537
Cuchillas, Scotts . . . LG 537–539
Cuchillas, sierra de desbroce cortadora de matorrales . . . LG 1014
Cuchillas, Simplicity . . . LG 539–545
Cuchillas, Snapper . . . LG 545–556
Cuchillas, Spartan . . . LG 557
Cuchillas, Steiner . . . LG 557–558
Cuchillas, Sutech . . . LG 559
Cuchillas, Swisher . . . LG 559
Cuchillas, Toro . . . LG 560–573
Cuchillas, Troy-Bilt . . . LG 573–576
Cuchillas, universal . . . LG 368
Cuchillas, Walker . . . LG 576
Cuchillas, Woods . . . LG 577–579
Cuchillas, Wright Stander . . . LG 579–582
Cuchillas, Zipper . . . LG 583
Cuerda de arrancador manual . . . LG 937
CUERDA DE ARRANQUE . . . LG 937
Cuerda, arranque . . . LG 937
Cuña de 4 lados, cortadoras de troncos . . . OPE 47
Cuña de tala . . . SFS 14
Cuñas, tala . . . SFS 14

D

Dayton, aplicaciones para ruedas dentadas . . . FOR 187
Depósitos de combustible, Honda . . . LG 770
Depósitos, combustible . . . LG 770
Derretidor de nieve y hielo . . . SFS 97
Derretidor, nieve y hielo . . . SFS 97
Deslizaderas universales para lanzador de nieve . . . LG 849
Deslizaderas, lanzadores de nieve . . . LG 849–851
Desmalezadora ST120VX, 120V Professional Series™ . . . OPE 33
Desmalezadora ST600, multiaccesorios sin cable . . . OPE 13
DeWalt, aplicaciones de barras y cadenas . . . FOR 26
Diafragmas del carburador, Briggs & Stratton . . . LG 622–623
Diafragmas del carburador, Tecumseh . . . LG 623
Diafragmas, carburadores . . . LG 622–623
Diente del rociador . . . LG 590
Dientes de arado, Troy-Bilt . . . LG 954
Dientes, arado . . . LG 954
Diodos . . . LG 741
Disco de propulsión, lanzadores de nieve . . . LG 851
Discos de propulsión . . . LG 726
Dispositivo de seguridad, correa . . . LG 802
Dixie Chopper, cables de control . . . LG 708
Dixie Chopper, conjuntos semineumáticos de ruedas sin pinchaduras . . . LG 1044–1046
Dixie Chopper, correas . . . LG 277
Dixie Chopper, cuchillas . . . LG 413–416
Dixie Chopper, embragues eléctricos TDF . . . LG 733–741
Dixie Chopper, ruedas intermedias . . . LG 827
Dixie Chopper, vástagos . . . LG 883
Dixon, cojinetes . . . LG 232
Dixon, conjuntos de ruedas neumáticas . . . LG 1044–1046
Dixon, conjuntos semineumáticos de ruedas sin pinchaduras . . . LG 1044–1046
Dixon, correas . . . LG 278
Dixon, cuchillas . . . LG 416–428
Dixon, vástagos . . . LG 883–884
Dolmar, aplicaciones de barras y cadenas . . . FOR 26–29
Dolmar, aplicaciones para ruedas dentadas . . . FOR 187–188
Dolmar, resortes del arranque manual . . . LG 937
Dynamark, correas . . . LG 278
Dynamow, cuchillas . . . LG 430

E

E-Z Roll, correas . . . LG 278
Earth Quake, cuchillas de cortadora de bordes . . . LG 584
Earthquake, aplicaciones de barras y cadenas . . . FOR 29
Earthwise, aplicaciones de barras y cadenas . . . FOR 29–30
Echo, aplicaciones de barras y cadenas . . . FOR 30–33
Echo, aplicaciones para ruedas dentadas . . . FOR 188–189
Echo, cuchillas de cortadoras de bordes . . . LG 584
Echo, filtros de aire . . . LG 189–191
Echo, piezas de cortadora y sopladora . . . LG 1016–1018
Echo, poleas de arranque manual . . . LG 933
Echo, resortes de arranque manual . . . LG 937
Echo, tapas de combustible . . . LG 770–771
Echo, trinquetes y resortes de arranque . . . LG 930–931
Efco, aplicaciones de barras y cadenas . . . FOR 33–35
Efco, aplicaciones para ruedas dentadas . . . FOR 189
Efco, filtros de aire . . . LG 210
Eje de dirección . . . LG 940
Eje de dirección, AYP . . . LG 940
Eje de dirección, Husqvarna . . . LG 940
Eje de dirección, MTD . . . LG 940
Eje, dirección . . . LG 940
Ejes de vástagos . . . LG 906–910
Ejes huecos . . . LG 906–910
Ejes huecos, cuchilla . . . LG 869–910
Ejes, huecos . . . LG 906–910
Ejes, MTD . . . LG 938
Ejes, vástagos . . . LG 906–910
Embrague de cuchilla, eléctrico . . . LG 733–741
Embrague eléctrico TDF . . . LG 733–741
Embrague TDF . . . LG 733–741
Embrague, TDF (toma de fuerza) eléctrica . . . LG 733–741
EMBRAGUES CENTRÍFUGOS . . . LG 675
Empaques de exhibición, anillos en E . . . LG 799
Empaques de exhibición, boquillas de engrase . . . LG 800
Empaques de exhibición, chavetas de acoplador . . . LG 799
Empaques de exhibición, chavetas de bloqueo . . . LG 800
Empaques de exhibición, collares de eje . . . LG 801
Empaques de exhibición, horquillas . . . LG 800
Empaques de exhibición, llaves de maquinaria . . . LG 801
Empaques de exhibición, llaves woodruff . . . LG 801
Empaques de exhibición, pasadores de chaveta . . . LG 799
Empaques de exhibición, pasadores de resorte . . . LG 801
Empaquetadura de admisión, motores de dos tiempos . . . LG 621
Empaquetadura, Kohler . . . LG 757
Empaquetadura, Tecumseh . . . LG 758–759
Empaquetaduras de la cuba del flotador . . . LG 626–627
Empaquetaduras de la cuba del flotador del carburador . . . LG 626–627
Empaquetaduras de la cuba del flotador del carburador, Briggs & Stratton . . . LG 627
Empaquetaduras de la cuba del flotador del carburador, Honda . . . LG 626–627
Empaquetaduras de la cuba del flotador del carburador, Lawn-Boy . . . LG 626–627
Empaquetaduras de la cuba del flotador del carburador, Oregon® . . . LG 626–627
Empaquetaduras de la cuba del flotador del carburador, Walbro . . . LG 627
Empaquetaduras de la cuba del flotador, Briggs & Stratton . . . LG 627
Empaquetaduras de la cuba del flotador, Honda . . . LG 626–627
Empaquetaduras de la cuba del flotador, Lawn-Boy . . . LG 626–627
Empaquetaduras de la cuba del flotador, Oregon® . . . LG 626–627
Empaquetaduras de la cuba del flotador, Walbro . . . LG 627
Empaquetaduras, admisión motor de 2 tiempos . . . LG 621
Empaquetaduras, Briggs & Stratton . . . LG 745–749
Empaquetaduras, Honda . . . LG 751–753
Empaquetaduras, surtido para admisión motor de 2 tiempos . . . SFS 103
Encore, bujes . . . LG 232
Encore, cojinetes . . . LG 232
Encore, correas . . . LG 278
Encore, cuchillas . . . LG 431–434
Encore, embragues eléctricos TDF . . . LG 733–741
Enginaire, filtros de aire de espuma . . . LG 203
Engranaje de sector de dirección, AYP . . . LG 941
Engranaje de sector de dirección, Husqvarna . . . LG 941
Engranajes de motor de propulsión . . . OPE 20
Engranajes, arrancadores eléctricos . . . LG 927–928
Enlaces de arrastre . . . LG 939
Equilibradores, cuchillas cortadoras de césped . . . SFS 63
EQUIPO DE SEGURIDAD . . . SFS 108–121
Escobillas, arrancadores eléctricos . . . LG 927
Eslabones de dirección . . . LG 939
Eslabones superiores . . . LG 794
ESLABONES, GATOS Y ACCESORIOS . . . LG 792–801
Espaciadores de vástagos . . . LG 910
Espaciadores, vástagos . . . LG 910
Estabilizador de combustible . . . SFS 85
Estabilizador, combustible . . . SFS 85
Estante, anteojos de seguridad . . . SFS 20
Everride, cuchillas . . . LG 434
Excel, cables de control . . . LG 708
Excel, correas . . . LG 279
Excel, cuchillas . . . LG 470–475
Excel, ruedas intermedias . . . LG 827
Excel, vástagos . . . LG 884
Exhibición de cortadoras de cadenas de motosierras OREGON® . . . SFS 23

Exhibición de cuchillas de cadena, cadena para motosierra Oregon® . . . . . SFS 23
Exhibición modular . . . . . SFS 4–6
Exmark, bujes . . . . . LG 233-234
Exmark, cojinetes . . . . . LG 233-234
Exmark, conjuntos de ruedas neumáticas . . . . . LG 1044–1046
Exmark, conjuntos semineumáticos de ruedas sin pinchaduras . . . . . LG 1044–1046
Exmark, correas . . . . . LG 279–283
Exmark, cuchillas . . . . . LG 434–443
Exmark, embragues eléctricos TDF . . . . . LG 733–741
Exmark, filtros de aire . . . . . LG 191
Exmark, interruptores de seguridad . . . . . LG 947–948
Exmark, interruptores TDF . . . . . LG 946–947
Exmark, poleas de propulsión . . . . . LG 836
Exmark, rótulas . . . . . LG 938–939
Exmark, ruedas intermedias . . . . . LG 827–828
Exmark, ruedas/rodillos antidesbroce . . . . . LG 1037–1042
Exmark, tapas de combustible . . . . . LG 771
Exmark, vástagos . . . . . LG 884–889
Extensión EX600, multiaccesorios sin cable . . . . . OPE 12
Extractor de aceite . . . . . SFS 67
Extractor de combustible . . . . . SFS 67
Extractor de engranaje . . . . . SFS 65
Extractor del volante . . . . . SFS 65
Extractor, aceite . . . . . SFS 67
Extractor, combustible . . . . . SFS 67
Extractor, engranaje . . . . . SFS 65
Extractor, volante . . . . . SFS 65
EZ-Go, correas . . . . . LG 283

F

Fairmont Hydraulic, aplicaciones de barras y cadenas . . . . . FOR 35–36
Ferris, cojinetes . . . . . LG 234
Ferris, correas . . . . . LG 283–284
Ferris, cuchillas . . . . . LG 443–446
Ferris, ruedas/rodillos antidesbroce . . . . . LG 1037–1042
Ferris, vástagos . . . . . LG 889
Filtro de combustible, tipo cuba . . . . . LG 765
FILTROS DE ACEITE . . . . . LG 814–819
Filtros de aceite hidráulicos . . . . . LG 819
Filtros de aceite, Briggs & Stratton . . . . . LG 814–819
Filtros de aceite, Generac . . . . . LG 814–819
Filtros de aceite, Honda . . . . . LG 814–819
Filtros de aceite, Kawasaki . . . . . LG 814–819
Filtros de aceite, Kohler . . . . . LG 814–819
Filtros de aceite, Tecumseh . . . . . LG 814–819
FILTROS DE AIRE. . . . . LG 178–222
Filtros de aire, Ariens . . . . . LG 179
Filtros de aire, Briggs & Stratton, espuma . . . . . LG 185–189
Filtros de aire, Briggs & Stratton, papel . . . . . LG 179–185
Filtros de aire, Echo . . . . . LG 189–191
Filtros de aire, Efco . . . . . LG 210
Filtros de aire, Enginaire . . . . . LG 203
Filtros de aire, Exmark . . . . . LG 191
Filtros de aire, Homelite . . . . . LG 191–192
Filtros de aire, Honda, conjunto de la cubierta . . . . . LG 196
Filtros de aire, Honda, espuma . . . . . LG 195–196
Filtros de aire, Honda, papel . . . . . LG 192–194
Filtros de aire, Husqvarna . . . . . LG 197–198
Filtros de aire, Kawasaki, espuma . . . . . LG 201–203
Filtros de aire, Kawasaki, papel . . . . . LG 198–201
Filtros de aire, Kohler, espuma . . . . . LG 206–207
Filtros de aire, Kohler, papel . . . . . LG 203–206
Filtros de aire, Kubota . . . . . LG 208
Filtros de aire, Lawn-Boy . . . . . LG 209
Filtros de aire, Maruyama . . . . . LG 209
Filtros de aire, McCulloch . . . . . LG 209
Filtros de aire, Mitsubishi . . . . . LG 210
Filtros de aire, motosierras . . . . . LG 678–684
Filtros de aire, MTD . . . . . LG 210
Filtros de aire, Oleo-Mac . . . . . LG 210
Filtros de aire, Onan . . . . . LG 211
Filtros de aire, paquetes para taller . . . . . LG 178
Filtros de aire, Partner . . . . . LG 211
Filtros de aire, Poulan . . . . . LG 211–212
Filtros de aire, RedMax . . . . . LG 212
Filtros de aire, Shindaiwa . . . . . LG 212–213
Filtros de aire, sierras abrasiva . . . . . LG 678–684
Filtros de aire, Stihl . . . . . LG 213–216
Filtros de aire, Tecumseh, espuma . . . . . LG 219
Filtros de aire, Tecumseh, papel . . . . . LG 216–218
Filtros de aire, Toro . . . . . LG 219–220
Filtros de aire, Wheel Horse . . . . . LG 220
Filtros de aire, Wisconsin . . . . . LG 220
Filtros de aire, Wisconsin Robin . . . . . LG 220–222
Filtros de combustible del carburador . . . . . LG 627
Filtros de combustible en el conducto, Bobcat . . . . . LG 774–776
Filtros de combustible en el conducto, Briggs & Stratton . . . . . LG 774–776
Filtros de combustible en el conducto, John Deere . . . . . LG 774–776
Filtros de combustible en el conducto, Kawasaki . . . . . LG 774–776
Filtros de combustible en el conducto, Kohler . . . . . LG 774–776
Filtros de combustible en el conducto, Kubota . . . . . LG 774–776
Filtros de combustible en el conducto, Scag . . . . . LG 774–776
Filtros de combustible en el conducto, Snapper . . . . . LG 774–776
Filtros de combustible en el conducto, Tecumseh . . . . . LG 774–776
Filtros de combustible en el conducto, Toro . . . . . LG 774–776
Filtros de combustible en el depósito . . . . . LG 776–779
Filtros de combustible en el depósito, surtido . . . . . SFS 103
Filtros de combustible, dentro del depósito . . . . . LG 776–779
Filtros de combustible, en el conducto . . . . . LG 774–776
Filtros de combustible, motosierras . . . . . LG 691–692
Filtros, aceite . . . . . LG 814–819
Filtros, aceite hidráulico . . . . . LG 819
Filtros, aire . . . . . LG 178-222
Filtros, combustible en el conducto . . . . . LG 774–776
Flotadores del carburador . . . . . LG 624–625
Flotadores del carburador Oregon® . . . . . LG 624–625
Flotadores del carburador, Briggs & Stratton . . . . . LG 624
Flotadores del carburador, Honda . . . . . LG 624
Flotadores del carburador, Oregon® . . . . . LG 624–625
Flotadores del carburador, Tecumseh . . . . . LG 625
Flotadores, carburadores . . . . . LG 624–625
Ford/New Holland, cuchillas . . . . . LG 447
Freno, cuchilla . . . . . LG 802
Frontier, aplicaciones para ruedas dentadas . . . . . FOR 189
Fundas de bujías . . . . . LG 787–788
Fusibles . . . . . LG 742

G

Gabinetes de almacenamiento de líquidos inflamables . . . . . SFS 89–90
Gabinetes de almacenamiento, líquidos inflamables . . . . . SFS 89–90
Gafas de seguridad . . . . . SFS 117–119
Gafas, seguridad . . . . . SFS 117–119
Gancho de exhibidor, 5" . . . . . SFS 20
Gatos . . . . . LG 796–798
Gatos, frontales . . . . . LG 796–798
Generac, filtros de aceite . . . . . LG 814–819
Giant Vac, cuchillas . . . . . LG 447–448
Gilson, vástagos . . . . . LG 891
Goodall, cuchillas . . . . . LG 390–392
Grasa "0" . . . . . LG 728
Grasa "00" . . . . . LG 728
Grasa de alta temperatura, cartucho de 14 oz . . . . . SFS 92
Grasa, alta temperatura, cartucho de 14oz . . . . . SFS 92
Grasshopper, bujes . . . . . LG 234–235
Grasshopper, cojinetes . . . . . LG 234–235
Grasshopper, conjuntos de ruedas neumáticas . . . . . LG 1044–1046
Grasshopper, correas . . . . . LG 284–285
Grasshopper, cuchillas . . . . . LG 448–450
Grasshopper, embragues eléctricos TDF . . . . . LG 733–741
Grasshopper, interruptores de seguridad . . . . . LG 947–948
Grasshopper, interruptores TDF . . . . . LG 946–947
Grasshopper, ruedas intermedias . . . . . LG 828
Grasshopper, ruedas/rodillos antidesbroce . . . . . LG 1037–1042
Grasshopper, vástagos . . . . . LG 890
Gravely, bujes . . . . . LG 235
Gravely, cables de control . . . . . LG 708
Gravely, cojinetes . . . . . LG 235
Gravely, conjuntos semineumáticos de ruedas sin pinchaduras . . . . . LG 1044–1046
Gravely, correas . . . . . LG 285–287
Gravely, cuchillas . . . . . LG 450–456
Gravely, embragues eléctricos TDF . . . . . LG 733–741
Gravely, interruptores de seguridad . . . . . LG 947–948
Gravely, interruptores TDF . . . . . LG 946–947
Gravely, ruedas/rodillos antidesbroce . . . . . LG 1037–1042
Gravely, silenciador . . . . . LG 807
Gravely, vástagos . . . . . LG 890–891
Great Dane, correas . . . . . LG 287–288
Great Dane, cuchillas . . . . . LG 456–457
Great Dane, embragues eléctricos TDF . . . . . LG 733–741
Great Dane, vástagos . . . . . LG 891

2019 Índice Alfabético – ES

Green Machine, poleas del arranque manual . . . . . LG 936
Green Machine, resortes del arranque manual . . . . . LG 937
Greenworks, aplicaciones de barras y cadenas . . . . . FOR 36–37
Guantes . . . . . SFS 116
Guía de limado profesional en montaje en barra, cadena para motosierra . . . . SFS 11
Guía de limas, cadena para motosierra. . . . . SFS 9

H

Haz de cables de plástico . . . . . LG 723
Herramienta de calibración, cadena para motosierra. . . . . SFS 8
Herramienta de medición de correa . . . . . LG 331
Herramienta neumática, aceite . . . . . SFS 83
Herramienta para capacitación, cadena para motosierra. . . . . SFS 23
Herramienta para doblar el cable conductor del acelerador . . . . . LG 722
Herramienta para limpieza de surcos, barra de motosierra . . . . . SFS 14
Herramienta para nivelación de plataforma, cortadoras de césped . . . . . SFS 64
Herramienta para reparación de vástago de válvula de 4 vías . . . . . SFS 68
Herramienta Z-Bender para alambre del acelerador . . . . . SFS 66
Herramientas de afilado ruedas de afilar, afiladoras de cadena para motosierra SFS 41
Herramientas de afilado, ruedas de afilar para cadena para motosierra . . . . SFS 41
Herramientas de limar, cuchillas cortadoras de matorrales . . . . . LG 1015
Herramientas para neumáticos . . . . . SFS 69
HERRAMIENTAS PARA TIENDAS . . . . . SFS 24–71
Herramientas, tienda. . . . . SFS 24–71
Hidrolavadora con ahorrador de bomba, no aerosol . . . . . SFS 98
Hidrómetro, batería. . . . . LG 744
Hitachi, aplicaciones de barras y cadenas . . . . . FOR 37–38
Hoffco , resortes de arranque manual . . . . . LG 937
Homelite, aplicaciones de barras y cadenas . . . . . FOR 38–40
Homelite, aplicaciones para ruedas dentadas . . . . . FOR 189–190
Homelite, cuchillas de cortadora de bordes . . . . . LG 584
Homelite, filtros de aire . . . . . LG 191–192
Homelite, juego de carburadores . . . . . LG 605
Homelite, piezas de cortadora y sopladora . . . . . LG 1019
Homelite, poleas de arranque manual . . . . . LG 934
Homelite, resortes de arranque manual . . . . . LG 937
Homelite, tapas de combustible. . . . . LG 771
Honda, aisladores del carburador. . . . . LG 601
Honda, anillos. . . . . LG 754
Honda, anillos de pistones. . . . . LG 754
Honda, arrancadores manuales. . . . . LG 922–923
Honda, barras raspadoras para lanzadores de nieve . . . . . LG 847
Honda, bielas . . . . . LG 755
Honda, bielas . . . . . LG 755
Honda, bobinas de encendido . . . . . LG 784–787
Honda, cabezales largos. . . . . LG 755
Honda, cables de control. . . . . LG 708–709
Honda, carburadores. . . . . LG 596–597
Honda, cojinetes . . . . . LG 235
Honda, conjunto de la cubierta del filtro de aire . . . . . LG 196
Honda, correas . . . . . LG 288
Honda, cubas del flotador del carburador . . . . . LG 625
Honda, cuchillas . . . . . LG 457–458
Honda, depósitos de combustible. . . . . LG 770
Honda, deslizaderas para lanzador de nieve. . . . . LG 850
Honda, empaquetaduras. . . . . LG 751–753
Honda, filtros de aceite. . . . . LG 814–819
Honda, filtros de aire con espuma . . . . . LG 195–196
Honda, filtros de aire de papel. . . . . LG 192–194
Honda, flotadores del carburador. . . . . LG 624
Honda, interruptores de detención . . . . . LG 949
Honda, interruptores de encendido/apagado . . . . . LG 949
Honda, interruptores del sensor de aceite . . . . . LG 950
Honda, juegos de carburadores. . . . . LG 605
Honda, juegos de empaquetaduras. . . . . LG 751
Honda, manija de arranque . . . . . LG 930
Honda, motores de arranque . . . . . LG 918
Honda, paletas para lanzador de nieve . . . . . LG 846
Honda, pernos de cortar para lanzadores de nieve . . . . . LG 852–853
Honda, pistones. . . . . LG 754
Honda, poleas de arranque manual. . . . . LG 934
Honda, resortes de arranque manual. . . . . LG 937
Honda, ruedas . . . . . LG 1029–1046
Honda, sellos . . . . . LG 756
Honda, sellos de aceite . . . . . LG 756
Honda, silenciador . . . . . LG 807–808
Honda, sombreretes del arrancador . . . . . LG 929
Honda, tapas de combustible . . . . . LG 771
Honda, tapón de llenado de aceite . . . . . LG 756
Honda, tornillo central del arrancador . . . . . LG 929
Honda, trinquetes y resortes de arranque . . . . . LG 930–931
Honda, tubo de silenciador. . . . . LG 807–808
Honda, válvulas de admisión . . . . . LG 755
Honda, válvulas de aguja de admisión del carburador . . . . . LG 628–629
Honda, válvulas de escape . . . . . LG 755
Honda, varilla del aceite . . . . . LG 756
Horómetros . . . . . LG 741
Horómetros . . . . . LG 741
Horquilla ajustable . . . . . LG 805
Horquillas ajustables. . . . . LG 805
Horquillas, empaques de exhibición . . . . . LG 800
Horquillas, surtido . . . . . SFS 100
Huskee, cuchillas. . . . . LG 458
Husqvarna, adaptador del volante de dirección . . . . . LG 939
Husqvarna, adaptadores de cuchilla . . . . . LG 340
Husqvarna, aplicaciones de barras y cadenas. . . . . FOR 40–47
Husqvarna, aplicaciones para ruedas dentadas. . . . . FOR 190–193
Husqvarna, bobinas de encendido . . . . . LG 784–787
Husqvarna, buje de dirección . . . . . LG 941
Husqvarna, correas . . . . . LG 288–292
Husqvarna, cuchillas. . . . . LG 458–470
Husqvarna, cuchillas de cortadora de bordes . . . . . LG 585
Husqvarna, eje de dirección . . . . . LG 940
Husqvarna, embragues eléctricos TDF. . . . . LG 733–741
Husqvarna, engranaje del sector de dirección. . . . . LG 941
Husqvarna, enlaces de arrastre. . . . . LG 939
Husqvarna, eslabones de dirección. . . . . LG 939
Husqvarna, filtros de aire . . . . . LG 197–198
Husqvarna, interruptores de detención. . . . . LG 949
Husqvarna, interruptores de encendido . . . . . LG 942–945
Husqvarna, interruptores de encendido/apagado . . . . . LG 949
Husqvarna, pernos de cortar para lanzadores de nieve. . . . . LG 852–853
Husqvarna, piezas de cortadora y sopladora . . . . . LG 1020
Husqvarna, poleas de arranque manual . . . . . LG 934
Husqvarna, resortes de arranque manual . . . . . LG 937
Husqvarna, ruedas . . . . . LG 1029–1046
Husqvarna, soporte del eje de dirección . . . . . LG 939
Husqvarna, vástagos. . . . . LG 870–876
Hustler, cables de control . . . . . LG 708
Hustler, cojinetes. . . . . LG 236
Hustler, correas. . . . . LG 279
Hustler, cuchillas. . . . . LG 470–475
Hustler, embragues eléctricos TDF . . . . . LG 733–741
Hustler, ruedas intermedias. . . . . LG 827
Hustler, vástagos. . . . . LG 884

I

Inflador de neumáticos aerosol con manguera . . . . . SFS 94
Inflador de neumáticos tipo calzador de talón Oregon® . . . . . SFS 70
Inflador de neumáticos tipo calzador de talón, Oregon® . . . . . SFS 70
Inflador de neumáticos, aerosol con manguera . . . . . SFS 94
Inflador de neumáticos, Slime® . . . . . SFS 98
INFORMACIÓN ANSI . . . . . FOR 2–4
Ingersoll, cuchillas . . . . . LG 475
INTERRUPTORES. . . . . LG 942–950
Interruptores de detención . . . . . LG 949
Interruptores de encendido . . . . . LG 942–945
Interruptores de encendido, Ariens . . . . . LG 942–945
Interruptores de encendido, AYP . . . . . LG 942–945
Interruptores de encendido, Cub Cadet. . . . . LG 942–945
Interruptores de encendido, Husqvarna . . . . . LG 942–945
Interruptores de encendido, John Deere . . . . . LG 942–945
Interruptores de encendido, Kohler. . . . . LG 942–945
Interruptores de encendido, MTD . . . . . LG 942–945
Interruptores de encendido, Murray . . . . . LG 942–945
Interruptores de encendido, Snapper. . . . . LG 942–945
Interruptores de interbloqueo. . . . . LG 947–948
Interruptores de la TDF (toma de fuerza). . . . . LG 946–947
Interruptores de relé . . . . . LG 729
Interruptores de seguridad . . . . . LG 947–948
Interruptores del sensor de aceite, Honda . . . . . LG 950
Interruptores, arrancador . . . . . LG 942–945
Interruptores, detención . . . . . LG 949
Interruptores, encendido. . . . . LG 942–945
Interruptores, encendido/apagado . . . . . LG 949
Interruptores, interbloqueo . . . . . LG 947–948
Interruptores, seguridad. . . . . LG 947–948
Interruptores, TDF (toma de fuerza) . . . . . LG 946–947
Inventario esencial . . . . . SFS 21

J

J-B Weld . . . SFS 97
Jacobsen, barras raspadoras para lanzadores de nieve . . . LG 848
Jacobsen, cojinetes . . . LG 226–237
Jacobsen, cuchillas . . . LG 476–482
Jacobsen, cuchillas de cortadora de bordes . . . LG 585
Jacobsen, pernos de cortar para lanzadores de nieve . . . LG 852–853
Jaladeras . . . LG 802
Jaladeras . . . LG 802
John Deere, aplicaciones de barras y cadenas . . . FOR 47–49
John Deere, aplicaciones para ruedas dentadas . . . FOR 194
John Deere, barras raspadoras para lanzadores de nieve . . . LG 847–848
John Deere, bujes . . . LG 237–238
John Deere, bujes para lanzadores de nieve . . . LG 854
John Deere, cables de cebador . . . LG 709
John Deere, cojinetes . . . LG 237–238
John Deere, cojinetes para lanzadores de nieve . . . LG 854
John Deere, conjuntos semineumáticos de ruedas sin pinchaduras . . . LG 1044–1046
John Deere, correas . . . LG 292–297
John Deere, cuchillas . . . LG 482–493
John Deere, cuchillas de cortadoras de bordes . . . LG 585
John Deere, deslizaderas para lanzadores de nieve . . . LG 850
John Deere, embragues eléctricos TDF . . . LG 733–741
John Deere, filtros de combustible en el conducto . . . LG 774–776
John Deere, interruptores de encendido . . . LG 942–945
John Deere, interruptores de seguridad . . . LG 947–948
John Deere, interruptores TDF . . . LG 946–947
John Deere, pernos de cortar para lanzadores de nieve . . . LG 852–853
John Deere, reguladores de voltaje . . . LG 731–732
John Deere, rótulas . . . LG 938–939
John Deere, ruedas . . . LG 1029–1046
John Deere, ruedas intermedias . . . LG 829–831
John Deere, ruedas/rodillos antidesbroce . . . LG 1037–1042
John Deere, vástagos . . . LG 891–893
Jonsered, aplicaciones de barras y cadenas . . . FOR 50–55
Jonsered, aplicaciones para ruedas dentadas . . . FOR 194–195
Jonsered, resortes de arranque manual . . . LG 937
Juego adaptador de prensa remachadora con paso de 3/4" . . . SFS 47
Juego adaptador de prensa remachadora con paso de 3/4" . . . SFS 47
Juego de cortadora de arbustos con paquete de baterías . . . OPE 21
Juego de cortadora de arbustos con paquete de baterías . . . OPE 19
Juego de empaquetaduras, Briggs & Stratton . . . LG 745
Juego de empaquetaduras, Kohler . . . LG 757
Juego de empaquetaduras, Tecumseh . . . LG 757
Juego de engranajes de dirección, Murray . . . LG 941
Juego de llaves Allen con mango en t . . . SFS 66
Juego de llaves Allen, mango en t . . . SFS 66
Juego de mantenimiento profesional, cadena para motosierra . . . SFS 10
Juego de sacabocados de pivote de cilindro . . . SFS 68
Juego de sacabocados, pivote de cilindro . . . SFS 67
Juego de sierra de poste con paquete de baterías . . . OPE 20
Juegos de carburadores . . . LG 602–621
Juegos de carburadores Nikki . . . LG 606
Juegos de carburadores Oregon® . . . LG 606–608
Juegos de carburadores TK . . . LG 608
Juegos de carburadores Walbro . . . LG 608–614
Juegos de carburadores, Briggs & Stratton . . . LG 602–604
Juegos de carburadores, Cub Cadet . . . LG 604–605
Juegos de carburadores, Homelite . . . LG 605
Juegos de carburadores, Honda . . . LG 605
Juegos de carburadores, Kohler . . . LG 605
Juegos de carburadores, Lawn-Boy . . . LG 606
Juegos de carburadores, MTD . . . LG 606
Juegos de carburadores, Nikki . . . LG 606
Juegos de carburadores, Oregon® . . . LG 606–608
Juegos de carburadores, Tecumseh . . . LG 608–609
Juegos de carburadores, Tillotson . . . LG 609–610
Juegos de carburadores, TK . . . LG 608
Juegos de carburadores, Walbro . . . LG 608–614
Juegos de carburadores, Zama . . . LG 614–621
Juegos de empaquetaduras, Honda . . . LG 751
Juegos de manguera y arandela para sistema de combustible . . . LG 764–765
Juegos de reparación de neumáticos sin cámara . . . SFS 69
Juegos de reparación para rociadores de mochila . . . LG 911–912
Juegos de reparación, neumáticos sin cámara . . . SFS 69
Juegos, carburadores reconstruidos . . . LG 602–621
Juntas tóricas, surtido . . . SFS 102

K

Kawasaki, arrancadores manuales . . . LG 924
Kawasaki, cuchillas de cortadora de bordes . . . LG 585
Kawasaki, filtros de aceite . . . LG 814–819
Kawasaki, filtros de aire, espuma . . . LG 201–203
Kawasaki, filtros de aire, papel . . . LG 198–201
Kawasaki, filtros de combustible en el conducto . . . LG 774–776
Kawasaki, motores de arranque . . . LG 917–918
Kawasaki, peras cebadoras . . . LG 630
Kawasaki, poleas de arranque manual . . . LG 935
Kawasaki, reguladores de voltaje . . . LG 732
Kawasaki, resortes de arranque manual . . . LG 937
Kawasaki, tapas de combustible . . . LG 772
Kees, correas . . . LG 297
Kees, cuchillas . . . LG 494–497
Kinetic, partidor de troncos . . . OPE 44–45
King Kutter, conjuntos semineumáticos de ruedas sin pinchaduras . . . LG 1044–1046
King Kutter, correas . . . LG 298
King Kutter, cuchillas . . . LG 497
Kobalt, aplicaciones de barras y cadenas . . . FOR 55
Kohler, arrancadores manuales . . . LG 924
Kohler, bobinas de encendido . . . LG 784–787
Kohler, empaquetadura . . . LG 757
Kohler, engranajes del arrancador eléctrico . . . LG 928
Kohler, filtros de aceite . . . LG 814–819
Kohler, filtros de aire de espuma . . . LG 206–207
Kohler, filtros de aire de papel . . . LG 203–206
Kohler, filtros de combustible en el conducto . . . LG 774–776
Kohler, interruptores de encendido . . . LG 942–945
Kohler, juego de empaquetadura . . . LG 757
Kohler, juegos de carburadores . . . LG 605
Kohler, motores de arranque . . . LG 918–919
Kohler, platinos y condensador . . . LG 789
Kohler, reguladores de voltaje . . . LG 732
Kohler, resortes de arranque manual . . . LG 937
Kohler, silenciador . . . LG 808–809
Kubota, correas . . . LG 298–299
Kubota, cuchillas . . . LG 497–501
Kubota, filtros de aire . . . LG 208
Kubota, filtros de combustible en el conducto . . . LG 774–776
Kubota, interruptores de seguridad . . . LG 947–948
Kubota, interruptores TDF . . . LG 946–947
Kubota, ruedas/rodillos antidesbroce . . . LG 1037–1042

L

Land Pride, cuchillas . . . LG 501–503
Lanzador de nieve, arrancadores de 120V, Cub Cadet . . . LG 861
Lanzador de nieve, arrancadores de 120V, MTD . . . LG 861
Lanzador de nieve, arrancadores de 120V, Tecumseh . . . LG 861
Lanzador de nieve, arrancadores manuales, Cub Cadet . . . LG 860–861
Lanzador de nieve, arrancadores manuales, MTD . . . LG 860–861
Lanzador de nieve, bujes, Ariens . . . LG 853–854
Lanzador de nieve, bujes, Cub Cadet . . . LG 854–855
Lanzador de nieve, bujes, John Deere . . . LG 854
Lanzador de nieve, bujes, MTD . . . LG 854–855
Lanzador de nieve, cables de control de barrena . . . LG 701–720
Lanzador de nieve, cables de control de dirección . . . LG 701–720
Lanzador de nieve, cables de control de tubo de descarga . . . LG 701–720
Lanzador de nieve, cables de control, Cub Cadet . . . LG 856–859
Lanzador de nieve, cables de control, MTD . . . LG 856–859
Lanzador de nieve, cebador, Cub Cadet . . . LG 860
Lanzador de nieve, cebador, MTD . . . LG 860
Lanzador de nieve, cojinetes . . . LG 853–855
Lanzador de nieve, cojinetes, Ariens . . . LG 853–854
Lanzador de nieve, cojinetes, Cub Cadet . . . LG 854–855
Lanzador de nieve, cojinetes, John Deere . . . LG 854
Lanzador de nieve, cojinetes, MTD . . . LG 854–855
Lanzador de nieve, conjunto de barrena, MTD . . . LG 846
Lanzador de nieve, correas . . . LG 862–863
Lanzador de nieve, disco impulsor . . . LG 851
Lanzador de nieve, engranaje de bronce, Cub Cadet . . . LG 856
Lanzador de nieve, engranaje de bronce, MTD . . . LG 856
Lanzador de nieve, gatillo de control de dirección, Cub Cadet . . . LG 856
Lanzador de nieve, gatillo de control de dirección, MTD . . . LG 856
Lanzador de nieve, guarda de brida de tubo de descarga, Cub Cadet . . . LG 855
Lanzador de nieve, guarda de brida de tubo de descarga, MTD . . . LG 855
Lanzador de nieve, guía basculante de tubo de descarga, Cub Cadet . . . LG 856
Lanzador de nieve, guía basculante de tubo de descarga, MTD . . . LG 856

2019 Índice Alfabético – ES

Lanzador de nieve, juegos de carburadores, Cub Cadet . . . . . LG 859
Lanzador de nieve, juegos de carburadores, MTD. . . . . LG 859
Lanzador de nieve, leva de bloqueo del embrague, Cub Cadet . . . . . LG 856
Lanzador de nieve, leva de bloqueo del embrague, MTD . . . . . LG 856
Lanzador de nieve, llave de encendido, Cub Cadet . . . . . LG 861
Lanzador de nieve, llave de encendido, Tecumseh . . . . . LG 861
Lanzador de nieve, paletas . . . . . LG 846–847
Lanzador de nieve, paletas, Honda . . . . . LG 846
Lanzador de nieve, paletas, MTD . . . . . LG 846
Lanzador de nieve, paletas, Snapper . . . . . LG 847
Lanzador de nieve, paletas, Toro . . . . . LG 847
Lanzador de nieve, placa de bloqueo, Cub Cadet . . . . . LG 856
Lanzador de nieve, placa de bloqueo, MTD. . . . . LG 856
Lanzador de nieve, rueda, Cub Cadet . . . . . LG 856
Lanzador de nieve, rueda, MTD . . . . . LG 856
Lanzadores de nieve, barras raspadoras. . . . . LG 847–849
Lanzadores de nieve, barras raspadoras, Ariens . . . . . LG 847
Lanzadores de nieve, barras raspadoras, Honda . . . . . LG 847
Lanzadores de nieve, barras raspadoras, Jacobsen . . . . . LG 848
Lanzadores de nieve, barras raspadoras, John Deere . . . . . LG 847–848
Lanzadores de nieve, barras raspadoras, Simplicity . . . . . LG 849
Lanzadores de nieve, barras raspadoras, Snapper . . . . . LG 849
Lanzadores de nieve, barras raspadoras, Toro . . . . . LG 849
Lanzadores de nieve, deslizaderas . . . . . LG 849–851
Lanzadores de nieve, deslizaderas, Ariens . . . . . LG 850
Lanzadores de nieve, deslizaderas, Ariens . . . . . LG 850
Lanzadores de nieve, deslizaderas, AYP . . . . . LG 850
Lanzadores de nieve, deslizaderas, Honda. . . . . LG 850
Lanzadores de nieve, deslizaderas, John Deere . . . . . LG 850
Lanzadores de nieve, deslizaderas, MTD. . . . . LG 850
Lanzadores de nieve, deslizaderas, Murray . . . . . LG 850
Lanzadores de nieve, deslizaderas, Snapper . . . . . LG 850
Lanzadores de nieve, deslizaderas, Toro. . . . . LG 851
Lanzadores de nieve, deslizaderas, Universal . . . . . LG 849
Lanzadores de nieve, llave de encendido, MTD . . . . . LG 861
Lanzadores de nieve, palanca de arranque, agarradera de guante . . . . . LG 851
Lanzadores de nieve, paleta, Toro. . . . . LG 851
Lanzadores de nieve, pernos de cortar. . . . . LG 852–853
Lanzadores de nieve, pernos de cortar, Ariens . . . . . LG 852–853
Lanzadores de nieve, pernos de cortar, Honda . . . . . LG 852–853
Lanzadores de nieve, pernos de cortar, Husqvarna . . . . . LG 852–853
Lanzadores de nieve, pernos de cortar, Jacobsen. . . . . LG 852–853
Lanzadores de nieve, pernos de cortar, John Deere. . . . . LG 852–853
Lanzadores de nieve, pernos de cortar, MTD. . . . . LG 852–853
Lanzadores de nieve, pernos de cortar, Murray . . . . . LG 852–853
Lanzadores de nieve, pernos de cortar, Noma. . . . . LG 852–853
Lanzadores de nieve, pernos de cortar, Snapper . . . . . LG 852–853
Lanzadores de nieve, pernos de cortar, Universal. . . . . LG 852–853
Lanzadores de nieve, placas de barrido . . . . . LG 847–849
Lanzadores de nieve, placas de barrido, Cub Cadet . . . . . LG 848
Lanzadores de nieve, placas de barrido, MTD . . . . . LG 848–849
Lápices de taller . . . . . SFS 19
Lápices de taller . . . . . SFS 19
Lastec, cuchillas . . . . . LG 503–504
Lawn Chief, vástagos. . . . . LG 869
Lawn-Boy, bobinas de encendido . . . . . LG 784–787
Lawn-Boy, cojinetes . . . . . LG 238–239
Lawn-Boy, correas . . . . . LG 299
Lawn-Boy, cuchillas . . . . . LG 505
Lawn-Boy, cuchillas de cortadora de bordes . . . . . LG 585
Lawn-Boy, filtros de aire. . . . . LG 209
Lawn-Boy, juegos de carburadores. . . . . LG 606
Lawn-Boy, ruedas . . . . . LG 1029–1046
Lawn-Boy, válvulas de aguja de admisión del carburador . . . . . LG 629
Lengüetas para manguera de combustible . . . . . LG 765
Lesco, correas . . . . . LG 299
Lesco, cuchillas. . . . . LG 505–508
Lesco, cuchillas de cortadora de bordes . . . . . LG 585
Lijadoras de banda, cuchillas cortadoras de césped . . . . . SFS 58–59
Lijadoras de piedra, cuchillas cortadoras de césped . . . . . SFS 59–61
Lima de repuesto, barra de motosierra y herramienta para desbastador de rieles . . . . . SFS 13
Limas planas, cadena para motosierra Oregon® . . . . . SFS 8
Limas redondas, cadena para motosierra Oregon® . . . . . SFS 7–8
Limpiador de carburador en aerosol . . . . . SFS 93
Limpiador de carburador, aerosol. . . . . SFS 93
Limpiador de freno en aerosol. . . . . SFS 94
Limpiador de manos, Fast Orange . . . . . SFS 91
Limpiador para manos Fast Orange. . . . . SFS 91
Línea de recortadora Platinum Gatorline. . . . . OPE 27
Líneas de cortadora de bordes Gatorline para ST275 . . . . . OPE 26
Linterna de trabajo, WL275 Oregon® 40V MAX inalámbrica . . . . . OPE 22
Linterna portátil, PS250 Oregon® 40V MAX inalámbrica . . . . . OPE 22
Líquido de arranque en aerosol . . . . . SFS 93–94
Líquido de arranque en aerosol . . . . . SFS 93–94
LISTA DE PIEZAS ILUSTRADA . . . . . LG 40–175
Little Wonder, cojinetes . . . . . LG 239
Little Wonder, correas . . . . . LG 300
Little Wonder, cuchillas de cortadora de bordes. . . . . LG 585
Llave recta, provisión . . . . . LG 727
Llaves de encendido . . . . . LG 945–946
Llaves de maquinaria, empaques de exhibición . . . . . LG 801
Llaves de vaso con destornillador . . . . . SFS 19
Llaves del volante . . . . . LG 789
Llaves Woodruff, empaques de exhibición . . . . . LG 801
Llaves, arranque . . . . . LG 945–946
Llaves, encendido . . . . . LG 945–946
Llaves, volante . . . . . LG 790
LM300 Oregon® 40V MAX, cortadora de césped, sistema de herramienta sin cable . . . . . OPE 16
LM400 Oregon® 40V MAX, cortadora de césped, sistema de herramienta sin cable . . . . . OPE 17
Lubricante de engranajes, "0". . . . . SFS 92
Lubricante de engranajes, "00" . . . . . SFS 92
Lubricante de engranajes, 80–90 WT. . . . . SFS 92
Lubricante del talón del neumático . . . . . SFS 68
Lubricante, engranajes, "0" . . . . . SFS 92
Lubricante, engranajes, "00" . . . . . SFS 92
Lubricante, engranajes, 80–90 wt . . . . . SFS 92
Lubricante, penetrante. . . . . SFS 93
Lubricante, talón del neumático. . . . . SFS 68
Lubricantes, grasas, limpiadores, solventes y pegamentos . . . . . SFS 92–98

M

Makita, aplicaciones de barras y cadenas . . . . . FOR 56–59
Makita, aplicaciones para ruedas dentadas . . . . . FOR 196
Manijas de arrancadores manuales. . . . . LG 929–930
Manijas de limas, cadena para motosierra. . . . . SFS 9
Manijas, arrancadores manuales . . . . . LG 929–930
Maruyama, aplicaciones de barras y cadenas . . . . . FOR 59
Maruyama, cuchillas de cortadora de bordes . . . . . LG 586
Maruyama, filtros de aire . . . . . LG 209
Maruyama, piezas de cortadora y sopladora. . . . . LG 1020–1021
Maruyama, tapas de combustible. . . . . LG 772
Máscaras desechables de respiración . . . . . SFS 120
Máscaras respiradoras, desechables . . . . . SFS 120
Máscaras, respiradoras desechables . . . . . SFS 120
Massey Fergunson, correas . . . . . LG 300
Massey Fergunson, cuchillas . . . . . LG 508–511
Mastercraft, aplicaciones para ruedas dentadas . . . . . FOR 196
McClane, cables de control . . . . . LG 709
McClane, correas. . . . . LG 300
McClane, cuchillas de cortadora de bordes . . . . . LG 586
McCulloch, aplicaciones de barras y cadenas . . . . . FOR 60–62
McCulloch, aplicaciones para ruedas dentadas . . . . . FOR 196–197
McCulloch, cuchillas de cortadora de bordes . . . . . LG 586
McCulloch, filtros de aire . . . . . LG 209
McCulloch, piezas de cortadora y sopladora. . . . . LG 1021
McLane, cojinetes . . . . . LG 239
Mitsubishi, filtros de aire . . . . . LG 210
Mochila sopladora BL120VX, 120V Professional Series™ . . . . . OPE 32
Mochilas de baterías, 120V Professional Series™. . . . . OPE 36
Módulo de encendido Universal . . . . . LG 789
Módulo de encendido, universal. . . . . LG 789
Montante de la correa . . . . . LG 331
Montgomery Ward, aplicaciones para ruedas dentadas . . . . . FOR 197
Motor 2 tiempos, Only One™. . . . . SFS 19
Motores de ruedas hidrostáticas . . . . . LG 696
Motores de ruedas, propulsor hidrostático . . . . . LG 697
Motosierra, abridor para cadenas e impulsor de remachadora en la punta de la barra de la motosierra, alto rendimiento . . . . . SFS 45
Motosierra, abridor para cadenas, modelo para banco . . . . . SFS 43
Motosierra, aceite de motosierra, cuñas, llave de vaso con destornillador, varios. . . . . SFS 14, 19–20
Motosierra, afiladoras de cadenas . . . . . SFS 32–40
Motosierra, afiladoras de cadenas, abridoras, remachadoras. . . . . SFS 26–57
Motosierra, ajustadores de cadena . . . . . LG 686–687
Motosierra, ajustadores de cadena . . . . . SFS 47
Motosierra, aplicaciones de la rueda dentada por número de pieza de Oregon® . . . . . FOR 204–208
Motosierra, aplicaciones de las ruedas dentadas por modelo de sierra. . FOR 187–203
Motosierra, barras guía, barras, cuchillas de las motosierras. . . . . FOR 148–179

Motosierra, barras, barras guía, cuchillas de las motosierras . . . . . FOR 148–179
Motosierra, base de afiladora de cadenas . . . . . SFS 41
Motosierra, bolsa de herramientas . . . . . OPE 23
Motosierra, cómo establecer una orden de compra de cadena. . . . . FOR 98
Motosierra, conductos de combustible . . . . . LG 688–690
Motosierra, CS300 Oregon® 40V MAX inalámbrica . . . . . OPE 15
Motosierra, cubiertas de la barra . . . . . SFS 13
Motosierra, filtros de aire . . . . . LG 678–684
Motosierra, filtros de combustible . . . . . LG 691–692
Motosierra, fotografías de cadenas, descripciones, características . . . . FOR 111–137
Motosierra, fotografías de las barras, descripciones, características . . FOR 154-166
Motosierra, fotografías de las ruedas dentadas, descripciones, características . . . . . FOR 182–186
Motosierra, juegos de afilado de cadenas . . . . . SFS 10
Motosierra, llave . . . . . LG 677
Motosierra, montajes de la barra . . . . . FOR 171–177
Motosierra, peras cebadoras . . . . . LG 690
Motosierra, piezas de repuesto para cadenas . . . . . FOR 143
Motosierra, poleas de arranque . . . . . LG 692
Motosierra, prensas remachadoras de cadenas, alto rendimiento . . . . . SFS 46
Motosierra, prensas remachadoras de cadenas, modelo para banco . . . . . SFS 44
Motosierra, puntas reemplazables de la barra . . . . . FOR 167
Motosierra, resortes del arranque . . . . . LG 693
Motosierra, ruedas de afilar de 4-1/8" para afiladoras de cadenas . . . . . SFS 41
Motosierra, ruedas de afilar de 5-3/4" para afiladoras de cadenas . . . . . SFS 40
Motosierra, ruedas dentadas . . . . . FOR 180–210
Motosierra, tabla de afilado de cadenas . . . . . FOR 141
Motosierra, tabla de clasificación de cadenas . . . . . FOR 141
Motosierra, tabla de comparación de cadenas, Oregon® y otras marcas . FOR 138–139
Motosierra, tabla de conversión de cadenas, cadena P/N de consumidor a cadena P/N Pro de Oregon® . . . . . FOR 98
Motosierra, tablas de conversión de cadenas, recuento de eslabones de transmisión y longitudes de cadena . . . . . FOR 147
Motosierra, tensores de cadena. . . . . LG 686–687
Motosierra, terminología, piezas de una cadena, secuencia de cadena . . . . . FOR 110
Motosierra, tuercas de la barra . . . . . LG 686
Motosierras, barras y aceite para cadenas. . . . . SFS 19, 84
Motosierras, barras y herramienta para desbastador de rieles . . . . . SFS 13
Motosierras, barras y herramienta para limpieza de surcos . . . . . SFS 14
Motosierras, barras y herramientas de medición de cadenas para motosierras SFS 14
Motosierras, piezas eléctricas . . . . . LG 684–686
Motosierras, tapas de aceite . . . . . LG 690
Motosierras, tapas de combustible . . . . . LG 690
MTD, adaptadores de cuchillas . . . . . LG 340–341
MTD, arrancadores de 120V para lanzadores de nieve . . . . . LG 861
MTD, arrancadores manuales . . . . . LG 925
MTD, arrancadores manuales para lanzadores de nieve . . . . . LG 860–861
MTD, brazo de dirección . . . . . LG 939
MTD, bujes . . . . . LG 239–242
MTD, bujes para lanzador de nieve . . . . . LG 854–855
MTD, cables de control . . . . . LG 710–715
MTD, cables de control para lanzadores de nieve . . . . . LG 856–859
MTD, cebador para lanzadores de nieve . . . . . LG 860
MTD, cojinetes . . . . . LG 239–242
MTD, cojinetes para lanzador de nieve . . . . . LG 854–855
MTD, conjunto de barrena de lanzador de nieve . . . . . LG 846
MTD, correas . . . . . LG 300–306
MTD, correas de bloqueo de la campana de la cortadora. . . . . LG 803
MTD, cuchillas . . . . . LG 512–521
MTD, cuchillas de cortadora de bordes. . . . . LG 586
MTD, deslizaderas para lanzador de nieve . . . . . LG 850
MTD, discos de propulsión. . . . . LG 726
MTD, dispositivo de seguridad de la banda. . . . . LG 802
MTD, eje de dirección. . . . . LG 940
MTD, ejes . . . . . LG 938
MTD, embragues eléctricos TDF . . . . . LG 733–741
MTD, engranaje de bronce de lanzadores de nieve . . . . . LG 856
MTD, engranaje del piñón de dirección . . . . . LG 941
MTD, filtros de aire . . . . . LG 210
MTD, freno de cuchillas . . . . . LG 802
MTD, gatillo de control de dirección para lanzadores de nieve . . . . . LG 856
MTD, guarda de brida de drenaje para lanzadores de nieve . . . . . LG 855
MTD, guía basculante de drenaje para lanzadores de nieve . . . . . LG 856
MTD, interruptores de encendido . . . . . LG 942–945
MTD, interruptores de seguridad . . . . . LG 947–948
MTD, interruptores TDF . . . . . LG 946–947
MTD, juegos de carburador para lanzadores de nieve . . . . . LG 859
MTD, juegos de carburadores . . . . . LG 606
MTD, leva de bloqueo del embrague para lanzadores de nieve . . . . . LG 856
MTD, llaves de encendido para lanzadores de nieve . . . . . LG 861
MTD, motores de arranque . . . . . LG 921
MTD, paletas para lanzador de nieve . . . . . LG 846
MTD, peras cebadoras . . . . . LG 630
MTD, pernos de cortar para lanzadores de nieve . . . . . LG 852–853
MTD, piezas de cortadora y sopladora . . . . . LG 1021–1022
MTD, placa de bloqueo para lanzadores de nieve . . . . . LG 856
MTD, placas de barrido para lanzadores de nieve . . . . . LG 848–849
MTD, poleas de arranque manual . . . . . LG 935
MTD, poleas de propulsión. . . . . LG 837–838
MTD, rótulas . . . . . LG 938–939
MTD, rueda para lanzador de nieve . . . . . LG 856
MTD, ruedas. . . . . LG 1029–1046
MTD, ruedas intermedias . . . . . LG 831–832
MTD, ruedas/rodillos antidesbroce . . . . . LG 1037–1042
MTD, solenoides de encendido . . . . . LG 730
MTD, tapas de combustible . . . . . LG 772
MTD, vástagos . . . . . LG 893–901
Multiaccesorios sin cable, bordeadora EG600 . . . . . OPE 13
Multiaccesorios sin cable, cabezal eléctrico PH600. . . . . OPE 12
Multiaccesorios sin cable, cortasetos eléctrico HT600 . . . . . OPE 13
Multiaccesorios sin cable, desmalezadora ST600 . . . . . OPE 13
Multiaccesorios sin cable, extensión EX600 . . . . . OPE 12
Multiaccesorios sin cable, sierra montada sobre poste PS600. . . . . OPE 12
Murray, adaptadores de cuchillas. . . . . LG 342
Murray, bujes . . . . . LG 242–243
Murray, cables de control . . . . . LG 715–717
Murray, cojinetes . . . . . LG 242–243
Murray, correas. . . . . LG 306–309
Murray, cuchillas . . . . . LG 522–528
Murray, deslizaderas para lanzador de nieve . . . . . LG 850
Murray, enlaces de arrastre . . . . . LG 939
Murray, eslabones de dirección . . . . . LG 939
Murray, interruptores de encendido . . . . . LG 942–945
Murray, juego de engranajes de dirección . . . . . LG 941
Murray, pernos de cortar para lanzadores de nieve . . . . . LG 852–853
Murray, poleas de propulsión . . . . . LG 838–839
Murray, rótulas . . . . . LG 938–939
Murray, ruedas . . . . . LG 1029–1046
Murray, ruedas intermedias . . . . . LG 832–833
Murray, ruedas/rodillos antidesbroce . . . . . LG 1037–1042
Murray, silenciadores . . . . . LG 809
Murray, vástagos . . . . . LG 902

N

NEUMÁTICOS, CÁMARAS Y CADENAS PARA NEUMÁTICOS . . . . . LG 955–965
Neumáticos, de espuma sólida sin pinchaduras. . . . . LG 964
Neumáticos, dibujo agrícola. . . . . LG 958
Neumáticos, dibujo All Trail II . . . . . LG 964
Neumáticos, dibujo AT100 . . . . . LG 958
Neumáticos, dibujo AT489 . . . . . LG 964
Neumáticos, dibujo chevron . . . . . LG 959
Neumáticos, dibujo con refuerzo . . . . . LG 957
Neumáticos, dibujo de barra. . . . . LG 958
Neumáticos, dibujo de barra chevron. . . . . LG 958
Neumáticos, dibujo de carro de campo de golf . . . . . LG 963
Neumáticos, dibujo de golf . . . . . LG 963
Neumáticos, dibujo de nervadura recta . . . . . LG 960
Neumáticos, dibujo de varilla de golf . . . . . LG 959
Neumáticos, dibujo diente de sierra . . . . . LG 961
Neumáticos, dibujo liso . . . . . LG 960
Neumáticos, dibujo magnum . . . . . LG 962
Neumáticos, dibujo nudoso ATV. . . . . LG 963
Neumáticos, dibujo para césped . . . . . LG 959
Neumáticos, dibujo para lanzador de nieve . . . . . LG 958
Neumáticos, dibujo Polar Trac. . . . . LG 958
Neumáticos, dibujo Power Trac . . . . . LG 958
Neumáticos, dibujo Scorpion . . . . . LG 963
Neumáticos, dibujo Snow Hog. . . . . LG 958
Neumáticos, dibujo Super Lug. . . . . LG 958
Neumáticos, dibujo Super Turf . . . . . LG 962
Neumáticos, dibujo Tital . . . . . LG 958
Neumáticos, dibujo Tru Power. . . . . LG 958
Neumáticos, dibujo Turf CTR. . . . . LG 963
Neumáticos, dibujo Turf Master . . . . . LG 961
Neumáticos, dibujo Turf Mate . . . . . LG 963
Neumáticos, dibujo Turf Saver . . . . . LG 959
Neumáticos, dibujo Turf Saver II . . . . . LG 960
Neumáticos, dibujo Turf Smart . . . . . LG 962
Neumáticos, dibujo X-trac . . . . . LG 958
Neumáticos, funda . . . . . LG 964
Neumáticos, para carretilla . . . . . LG 957
Neumáticos, remolques de alta velocidad . . . . . LG 960

2019 Índice Alfabético – ES

Noma, bujes . . . . . LG 243
Noma, cojinetes . . . . . LG 243
Noma, correas . . . . . LG 309–310
Noma, pernos de cortar para lanzadores de nieve . . . . . LG 852–853
Noma, ruedas . . . . . LG 1029–1046
Noma, vástagos . . . . . LG 869

O

Oleo-Mac, filtros de aire . . . . . LG 210
Olympyk (Oleo-Mac), aplicaciones de barras y cadenas . . . . . FOR 62–64
Olympyk (Oleo-Mac), aplicaciones para ruedas dentadas . . . . . FOR 197
Onan, filtros de aire . . . . . LG 211
Onan, motores de arranque . . . . . LG 921
Onan, reguladores de voltaje . . . . . LG 732
OPE, accesorios . . . . . OPE 23
OPE, cadena PowerSharp® . . . . . OPE 25
OPE, piezas de repuesto . . . . . OPE 25
Oregon, aplicaciones para ruedas dentadas . . . . . FOR 197
Oregon®, productos seleccionados . . . . . FOR 4
Orejeras, seguridad auditiva . . . . . SFS 121

P

Palanca de tala . . . . . SFS 18
Palanca, tala . . . . . SFS 18
Paletas, derrames . . . . . SFS 89
Paletas, lanzadores de nieve . . . . . LG 846–847
Pallets para derrames . . . . . SFS 89
Pantalla de punto de venta, 120V Professional Series™ . . . . . OPE 37
Pantallas de punto de venta, sistema de herramienta sin cable . . . . . OPE 27–29
Pantalones de trabajo . . . . . SFS 114
Pantalones de trabajo de envoltura completa . . . . . SFS 114
Paquete de batería B425E . . . . . OPE 10
Paquete de batería B600E . . . . . OPE 10
Paquete de batería B650E . . . . . OPE 10
Paquetes de baterías de li-ion . . . . . OPE 10
Paquetes para tiendas, filtros de aire . . . . . LG 178
PARTES DEL LANZADOR DE NIEVE . . . . . LG 846–863
Partidor de troncos, 22 ton . . . . . OPE 39
Partidor de troncos, 28 ton . . . . . OPE 40
Partidor de troncos, 28 ton Extend Split™ . . . . . OPE 41
Partidor de troncos, 35 ton . . . . . OPE 42
Partidor de troncos, Kinetic . . . . . OPE 44–45
Partidores . . . . . OPE 38–47
PARTIDORES DE TRONCOS . . . . . OPE 38–47
Partidores de troncos Oregon . . . . . OPE 38–47
Partner, aplicaciones de barras y cadenas . . . . . FOR 65–66
Partner, aplicaciones para ruedas dentadas . . . . . FOR 197–198
Partner, correas . . . . . LG 310
Partner, filtros de aire . . . . . LG 211
Pasadores de bloqueo . . . . . LG 795
Pasadores de bloqueo, empaques de exhibición . . . . . LG 800
Pasadores de chaveta, empaques de exhibición . . . . . LG 799
Pasadores de dientes de arado, surtido . . . . . SFS 102
Pasadores de enganche . . . . . LG 795
Pasadores de enganche, cabeza roja . . . . . LG 796
Pasadores de enganche, doblados . . . . . LG 796
Pasadores de eslabón superior . . . . . LG 794
Pasadores de resorte, empaques de exhibición . . . . . LG 801
Pasadores de resorte, surtido . . . . . SFS 102
Pasadores de seguridad del volante . . . . . LG 789
Pasadores de seguridad, volante . . . . . LG 790
Pegamento Gorilla . . . . . SFS 97
Pegamento, Gorilla . . . . . SFS 97
Penetrante, lubricante . . . . . SFS 93
Peras cebadoras . . . . . LG 629–632
Peras cebadoras Walbro . . . . . LG 631–632
Peras cebadoras, motosierras . . . . . LG 690
Perilla . . . . . LG 805
Pernos autorroscantes . . . . . SFS 105
Pernos de cortar universales para lanzadores de nieve . . . . . LG 852–853
Pernos de cortar, lanzadores de nieve . . . . . LG 852–853
Pernos de cuchilla . . . . . SFS 105
Pernos de empuñadura . . . . . SFS 105
Pernos de tope . . . . . SFS 104–105
Pernos de tope, surtido . . . . . SFS 104–105
Pernos de vástagos . . . . . LG 910
Pernos, autorroscantes . . . . . SFS 105
Pernos, cuchilla . . . . . SFS 105
Pernos, empuñadura . . . . . SFS 105
Pernos, tope . . . . . SFS 105
Pernos, vástagos . . . . . LG 910
Pico de combustible, combustibles VP . . . . . SFS 81
Piedras de afilar, afiladoras portátiles de cadenas de motosierras . . . . . SFS 12
PIEZAS COMERCIALES . . . . . LG 694–698
PIEZAS DE ARRANCADORES . . . . . LG 926–936
Piezas de arrancadores manuales . . . . . LG 929–930
PIEZAS DE CORTADORA Y SOPLADORA . . . . . LG 1016–1027
Piezas de cortadora y sopladora, Echo . . . . . LG 1016–1018
Piezas de cortadora y sopladora, Homelite . . . . . LG 1019
Piezas de cortadora y sopladora, Husqvarna . . . . . LG 1020
Piezas de cortadora y sopladora, Maruyama . . . . . LG 1020–1021
Piezas de cortadora y sopladora, McCulloch . . . . . LG 1021
Piezas de cortadora y sopladora, MTD . . . . . LG 1021–1022
Piezas de cortadora y sopladora, RedMax . . . . . LG 1022
Piezas de cortadora y sopladora, Ryan . . . . . LG 1022–1023
Piezas de cortadora y sopladora, Ryobi . . . . . LG 1022–1023
Piezas de cortadora y sopladora, Shindaiwa . . . . . LG 1023–1024
Piezas de cortadora y sopladora, Snapper . . . . . LG 1024
Piezas de cortadora y sopladora, Stihl . . . . . LG 1024–1026
Piezas de cortadora y sopladora, Tanaka . . . . . LG 1026
Piezas de cortadora y sopladora, Weed Eater . . . . . LG 1027
Piezas de cortadoras y sopladoras Weed Eater . . . . . LG 1027
PIEZAS DE DIRECCIÓN . . . . . LG 938–941
PIEZAS DE ENCENDIDO . . . . . LG 784–790
Piezas de la suspensión de la plataforma de la cortadora . . . . . LG 804
PIEZAS DE PROPULSIÓN . . . . . LG 724–728
Piezas de repuesto Gator® SpeedLoad™ . . . . . LG 973
Piezas de repuesto para afiladoras y abridoras descontinuadas . . . . . SFS 48–57
Piezas de repuesto para afiladores de cuchillas cortadoras de césped . . . . . SFS 62
PIEZAS DEL ARADO . . . . . LG 954
Piezas del conjunto rodante . . . . . LG 694–695
PIEZAS DEL MOTOR . . . . . LG 745–760
PIEZAS ELÉCTRICAS . . . . . LG 729–744
Piezas eléctricas, motosierras . . . . . LG 684–686
Piezas eléctricas, sierras abrasivas . . . . . LG 684–686
Piezas para afiladoras, abridoras, remachadoras descontinuadas . . . . . SFS 48–57
PIEZAS PARA CADENA DE RODILLOS . . . . . LG 676
Piezas para convertidores de par . . . . . LG 675
PIEZAS PARA SIERRA DE CADENA Y SIERRA ABRASIVA . . LG 677–693
PIEZAS VARIAS . . . . . LG 802–805
Piñón de dirección, MTD . . . . . LG 941
Pinza hemostática . . . . . SFS 65
Pioneer, aplicaciones de barras y cadenas . . . . . FOR 67–68
Pioneer, aplicaciones para ruedas dentadas . . . . . FOR 198
Pistola desechable para grasa . . . . . SFS 12–13
Pistola para grasa de uso único . . . . . SFS 12–13
Pistola para grasa, desechable . . . . . SFS 12–13
Pistolas para grasa, barras de sierra de cadena . . . . . SFS 12–13
Pistones, Honda . . . . . LG 754
Pivote de detención del alambre del acelerador . . . . . LG 722
Placas de barrido, lanzadores de nieve . . . . . LG 847–849
Plataforma para derrames . . . . . SFS 89
Plataformas, derrame . . . . . SFS 89
Platinos y condensador, Briggs & Stratton . . . . . LG 789
Platinos y condensador, Kohler . . . . . LG 789
Platinos y condensador, Tecumseh . . . . . LG 789
Podadora motorizada / Podadora motorizada Echo, aplicaciones de barras y cadenas . . . . . FOR 73–74
POLEAS . . . . . LG 821–841
Poleas de arrancadores manuales . . . . . LG 932–935
Poleas de arrancadores manuales Mitsubishi . . . . . LG 935
Poleas de arrancadores manuales, Briggs & Stratton . . . . . LG 933
Poleas de arrancadores manuales, Echo . . . . . LG 933
Poleas de arrancadores manuales, Green Machine . . . . . LG 936
Poleas de arrancadores manuales, Homelite . . . . . LG 934
Poleas de arrancadores manuales, Honda . . . . . LG 934
Poleas de arrancadores manuales, Husqvarna . . . . . LG 934
Poleas de arrancadores manuales, Kawasaki . . . . . LG 935
Poleas de arrancadores manuales, Mitsubishi . . . . . LG 935
Poleas de arrancadores manuales, MTD . . . . . LG 935
Poleas de arrancadores manuales, Ryan . . . . . LG 934–935
Poleas de arrancadores manuales, Snapper . . . . . LG 936
Poleas de arrancadores manuales, Stihl . . . . . LG 936
Poleas de arrancadores manuales, Tecumseh . . . . . LG 936
Poleas de propulsión . . . . . LG 834–840
Poleas de propulsión por tamaño, tabla . . . . . LG 841
Poleas de propulsión, AYP . . . . . LG 834
Poleas de propulsión, Bobcat . . . . . LG 835
Poleas de propulsión, Cub Cadet . . . . . LG 837
Poleas de propulsión, Exmark . . . . . LG 836

Poleas de propulsión, MTD . . . LG 837–838
Poleas de propulsión, Murray . . . LG 838–839
Poleas de propulsión, Power Trim . . . LG 839
Poleas de propulsión, repuesto del fabricante original del equipo. . . . LG 834–840
Poleas de propulsión, Scag . . . LG 839–840
Poleas de propulsión, Snapper . . . LG 840
Poleas, arrancadores manuales . . . LG 932–935
Poleas, intermedia . . . LG 824–834
Poleas, propulsión . . . LG 834–840
Pomo palanca de cambios . . . LG 805
Portacuchillas . . . LG 340–342
Portafusibles . . . LG 742
Portalápices de taller . . . SFS 19
Portalápices de taller . . . SFS 19
Poulan / Poulan Pro, aplicaciones de barras y cadenas. . . . FOR 68–73
Poulan / Poulan Pro, aplicaciones para ruedas dentadas. . . . FOR 198–200
Poulan, correas profesionales . . . LG 311
Poulan, cuchillas . . . LG 529–533
Poulan, filtros de aire . . . LG 211–212
Poulan, peras cebadoras. . . . LG 630
Power Trim, correas . . . LG 311
Power Trim, cuchillas de cortadora de bordes. . . . LG 586
Power Trim, poleas de propulsión. . . . LG 839
Powerhorse, aplicaciones de barras y cadenas . . . FOR 74
PowerSharp® – Cadena de motosierra para OPE . . . OPE 25
PowerSharp® – Sistema para el afilado de cadenas de motosierras . . . FOR 136–137
Prensa remachadora de cadenas de motosierra de alto rendimiento . . . SFS 46
Prensa remachadora de cadenas de motosierra modelo para banco . . . SFS 44
Prensa remachadora eléctrica compacta . . . SFS 42
Prensa remachadora, cadenas para motosierra, alto rendimiento . . . SFS 46
Prensa remachadora, eléctrica compacta . . . SFS 42
Probador de chispas . . . SFS 65
Probador de compresión. . . . SFS 65
Probador, bujías . . . SFS 65
Probador, compresión . . . SFS 65
Púas de elevación para troncos . . . SFS 18
Púas de elevación, troncos . . . SFS 18
Punto de compra de material de soporte. . . . SFS 4–6, 21–23

R

Ramp, múltiple . . . SFS 89
Rampa múltiple . . . SFS 89
Rampas, cortadoras de césped . . . SFS 64
Ransomes, conjuntos semineumáticos de ruedas sin pinchaduras . . . LG 1044–1046
Raspador de empaquetadura . . . LG 760
Raspadora, empaquetadura . . . LG 760
Receptor para cortadora de troncos . . . OPE 46
Receptor, cortadoras de troncos . . . OPE 46
Receptores de hierba. . . . LG 781–782
Recortadora de hilo. . . . OPE 19
Recubrimiento de botas, neopreno . . . SFS 113
Recubrimiento para botas de neopreno . . . SFS 113
Red Hawk, cuchillas . . . LG 534–535
RedMax, aplicaciones de barras y cadenas . . . FOR 74–76
Redmax, aplicaciones para ruedas dentadas . . . FOR 200
RedMax, cuchillas de cortadora de bordes. . . . LG 587
RedMax, filtros de aire . . . LG 212
RedMax, piezas de cortadora y sopladora . . . LG 1022
RedMax, resortes de arranque manual. . . . LG 937
Refacer, válvulas . . . SFS 67
Reguladores de voltaje. . . . LG 731–732
Reguladores, voltaje . . . LG 731–732
Remington, aplicaciones de barras y cadenas. . . . FOR 77–78
Remington, aplicaciones para ruedas dentadas. . . . FOR 200
Repuesto cabezal de cortadora ST275 . . . OPE 26
Repuesto de cadena PowerSharp® para OPE . . . OPE 25
Repuesto de paquetes de baterías . . . OPE 10
Repuestos para línea de cortadora de bordes Gator® SpeedLoad™. . . . LG 973
Repuestos para poleas de propulsión del fabricante original del equipo . LG 834–840
Repuestos para ruedas intermedias del fabricante original del equipo . . LG 824–834
RESORTES . . . LG 913–914
Resortes de arrancador manual. . . . LG 937
Resortes de arrancadores manuales, Briggs & Stratton . . . LG 937
Resortes de arrancadores manuales, Dolmar . . . LG 937
Resortes de arrancadores manuales, Echo . . . LG 937
Resortes de arrancadores manuales, Green Machine. . . . LG 937
Resortes de arrancadores manuales, Hoffco . . . LG 937
Resortes de arrancadores manuales, Homelite . . . LG 937
Resortes de arrancadores manuales, Honda . . . LG 937
Resortes de arrancadores manuales, Husqvarna . . . LG 937
Resortes de arrancadores manuales, Jonsered. . . . LG 937
Resortes de arrancadores manuales, Kawasaki . . . LG 937
Resortes de arrancadores manuales, Kohler . . . LG 937
Resortes de arrancadores manuales, RedMax . . . LG 937
Resortes de arrancadores manuales, Robin . . . LG 937
Resortes de arrancadores manuales, Shindaiwa . . . LG 937
Resortes de arrancadores manuales, Stihl . . . LG 937
Resortes de extensión, surtido . . . SFS 104
Resortes de torsión, surtido. . . . SFS 104
Resortes, arrancadores manuales . . . LG 937
Respiraderos del sistema de combustible . . . LG 763–764
Respiraderos del sistema de combustible . . . LG 763–764
Robin, arrancadores manuales . . . LG 925
Robin, bobinas de encendido . . . LG 784–787
Robin, carburadores . . . LG 596
Robin, resortes de arranque manual . . . LG 937
ROCIADORES. . . . LG 911–912
Rociadores de mochila. . . . LG 911
Ropa de trabajo para lluvia . . . SFS 115
Ropa de trabajo, lluvia . . . SFS 115
Roper, bujes. . . . LG 227–228
Roper, cojinetes. . . . LG 227–228
Roper, correas . . . LG 311–312
Roper, vástagos. . . . LG 903–904
Rótulas . . . LG 938–939
Rueda de afilar, afiladora de cadena . . . LG 687
Rueda dentada, intermedia . . . LG 725
Rueda dentada, placa de acero . . . LG 725
RUEDAS . . . LG 1029–1047
Ruedas afiladoras de la cadena . . . LG 687
Ruedas de afilar, afiladores de cadenas de motosierras de 4-1/8". . . . SFS 41
Ruedas de afilar, afiladores de cadenas de motosierras de 5-3/4" . . . SFS 40
RUEDAS DENTADAS - MOTOSIERRA. . . . FOR 180–210
Ruedas dentadas de la placa de acero . . . LG 725
Ruedas dentadas de propulsión, motosierras . . . FOR 180–210
Ruedas dentadas intermedias. . . . LG 725
Ruedas intermedias . . . LG 821–823
Ruedas intermedias por tamaño, tabla . . . LG 821–823
Ruedas intermedias, AMF . . . LG 824
Ruedas intermedias, AYP . . . LG 824–825
Ruedas intermedias, Bobcat. . . . LG 825–826
Ruedas intermedias, Bunton. . . . LG 826–827
Ruedas intermedias, Cub Cadet . . . LG 826–827
Ruedas intermedias, Dixie Chopper. . . . LG 827
Ruedas intermedias, Excel. . . . LG 827
Ruedas intermedias, Exmark . . . LG 827–828
Ruedas intermedias, Grasshopper . . . LG 828
Ruedas intermedias, Hustler . . . LG 827
Ruedas intermedias, John Deere . . . LG 829–831
Ruedas intermedias, MTD . . . LG 831–832
Ruedas intermedias, Murray . . . LG 832–833
Ruedas intermedias, repuestos del fabricante original del equipo . . . LG 824–834
Ruedas intermedias, Scag . . . LG 833
Ruedas intermedias, Toro . . . LG 834
Ruedas para carretilla . . . LG 1047
Ruedas semineumáticas universales. . . . LG 1029–1037
Ruedas semineumáticas, AMF . . . LG 1029–1037
Ruedas semineumáticas, AYP. . . . LG 1029–1037
Ruedas semineumáticas, Bobcat . . . LG 1029–1037
Ruedas semineumáticas, Bunton . . . LG 1029–1037
Ruedas semineumáticas, Honda . . . LG 1029–1037
Ruedas semineumáticas, Husqvarna. . . . LG 1029–1037
Ruedas semineumáticas, John Deere . . . LG 1029–1037
Ruedas semineumáticas, Lawn-Boy . . . LG 1029–1037
Ruedas semineumáticas, MTD . . . LG 1029–1037
Ruedas semineumáticas, Murray . . . LG 1029–1037
Ruedas semineumáticas, Noma. . . . LG 1029–1037
Ruedas semineumáticas, Sears. . . . LG 1029–1037
Ruedas semineumáticas, Sensation . . . LG 1029–1037
Ruedas semineumáticas, Snapper . . . LG 1029–1037
Ruedas semineumáticas, Toro . . . LG 1029–1037
Ruedas Sensation . . . LG 1029–1046
Ruedas, afiladores de cadenas de motosierras . . . SFS 40–41
Ruedas, AMF . . . LG 1029–1046
Ruedas, AYP. . . . LG 1029–1046
Ruedas, Bobcat . . . LG 1029–1046
Ruedas, Bunton . . . LG 1029–1046
Ruedas, carretillas . . . LG 1047
Ruedas, Honda . . . LG 1029–1046
Ruedas, Husqvarna. . . . LG 1029–1046
Ruedas, John Deere . . . LG 1029–1046
Ruedas, Lawn-Boy . . . LG 1029–1046

2019 Índice Alfabético – ES

Ruedas, MTD . . . . . LG 1029–1046
Ruedas, Murray . . . . . LG 1029–1046
Ruedas, Noma . . . . . LG 1029–1046
Ruedas, Sears . . . . . LG 1029–1046
Ruedas, Sensation . . . . . LG 1029–1046
Ruedas, Snapper . . . . . LG 1029–1046
Ruedas, Toro . . . . . LG 1029–1046
Ruedas, universales semineumáticas . . . . . LG 1029–1037
Ruedas/rodillos antidesbroce, AMF . . . . . LG 1037–1042
Ruedas/rodillos antidesbroce, AYP . . . . . LG 1037–1042
Ruedas/rodillos antidesbroce, Bobcat . . . . . LG 1037–1042
Ruedas/rodillos antidesbroce, Bolens . . . . . LG 1037–1042
Ruedas/rodillos antidesbroce, Cub Cadet . . . . . LG 1037–1042
Ruedas/rodillos antidesbroce, Exmark . . . . . LG 1037–1042
Ruedas/rodillos antidesbroce, Ferris . . . . . LG 1037–1042
Ruedas/rodillos antidesbroce, Grasshopper . . . . . LG 1037–1042
Ruedas/rodillos antidesbroce, Gravely . . . . . LG 1037–1042
Ruedas/rodillos antidesbroce, John Deere . . . . . LG 1037–1042
Ruedas/rodillos antidesbroce, Kubota . . . . . LG 1037–1042
Ruedas/rodillos antidesbroce, MTD . . . . . LG 1037–1042
Ruedas/rodillos antidesbroce, Murray . . . . . LG 1037–1042
Ruedas/rodillos antidesbroce, Scag . . . . . LG 1037–1042
Ruedas/rodillos antidesbroce, Toro . . . . . LG 1037–1042
Ruedas/rodillos antidesbroce, Wheel Horse . . . . . LG 1037–1042
Ryan, piezas de cortadora y sopladora . . . . . LG 1022–1023
Ryan, poleas de arranque manual . . . . . LG 934–935
Ryobi, aplicaciones de barras y cadenas . . . . . FOR 78–79
Ryobi, cuchillas de cortadora de bordes . . . . . LG 587
Ryobi, piezas de cortadora y sopladora . . . . . LG 1022–1023

S

Scag, bujes . . . . . LG 244
Scag, cables de control . . . . . LG 717–718
Scag, cinta de freno . . . . . LG 698
Scag, cojinetes . . . . . LG 244
Scag, conjuntos de ruedas neumáticas . . . . . LG 1044–1046
Scag, conjuntos semineumáticos de ruedas sin pinchaduras . . . . . LG 1044–1046
Scag, correa de tanque de combustible . . . . . LG 698
Scag, correas . . . . . LG 312–314
Scag, cuchillas . . . . . LG 535–537
Scag, filtros de combustible en el conducto . . . . . LG 774–776
Scag, interruptores de seguridad . . . . . LG 947–948
Scag, interruptores TDF . . . . . LG 946–947
Scag, poleas de propulsión . . . . . LG 839–840
Scag, rótulas . . . . . LG 938–939
Scag, ruedas intermedias . . . . . LG 833
Scag, ruedas/rodillos antidesbroce . . . . . LG 1037–1042
Scag, tapas de combustible . . . . . LG 772
Scag, vástagos . . . . . LG 903
Scotts, correas . . . . . LG 315
Scotts, cuchillas . . . . . LG 537–539
Sears / Craftsman, adaptadores de cuchilla . . . . . LG 342
Sears / Craftsman, aplicaciones de barras y cadenas . . . . . FOR 23–25
Sears / Craftsman, aplicaciones para ruedas dentadas . . . . . FOR 200
Sears / Craftsman, bujes . . . . . LG 227–228
Sears / Craftsman, cojinetes . . . . . LG 227–228
Sears / Craftsman, correas . . . . . LG 315
Sears / Craftsman, cuchillas de cortadoras de bordes . . . . . LG 587
Sears / Craftsman, ruedas . . . . . LG 1029–1046
Sears / Craftsman, vástagos . . . . . LG 903–904
Seguridad auditiva, orejeras . . . . . SFS 121
Seguridad, información ANSI de la motosierra . . . . . FOR 2–3
Sellador de neumáticos Slime® . . . . . SFS 98
Sellador de rosca Permatex . . . . . SFS 96
Sellador de rosca, Permatex . . . . . SFS 96
Sellador Permatex . . . . . SFS 96
Sellador, Permatex . . . . . SFS 95
Sello de aceite, Tecumseh . . . . . LG 759
Sello de aceite, Troy-Bilt . . . . . LG 954
Sello, Troy-Bilt . . . . . LG 954
Sellos de aceite, Briggs & Stratton . . . . . LG 749
Sellos de aceite, Honda . . . . . LG 756
Sellos de vástagos . . . . . LG 910
Sellos, Briggs & Stratton . . . . . LG 749
Sellos, Honda . . . . . LG 756
Sellos, vástagos . . . . . LG 910
Shindaiwa, aplicaciones de barras y cadenas . . . . . FOR 79–83
Shindaiwa, cuchillas de cortadora de bordes . . . . . LG 587
Shindaiwa, filtros de aire . . . . . LG 212–213
Shindaiwa, piezas de cortadora y sopladora . . . . . LG 1023–1024
Shindaiwa, resortes de arranque manual . . . . . LG 937
Shindaiwa, tapas de combustible . . . . . LG 772
Sierra de poste PS250 . . . . . OPE 20
Sierra de poste, PS250 Oregon® 40V MAX inalámbrica . . . . . OPE 20
Sierra montada sobre poste PS600, multiaccesorios sin cable . . . . . OPE 12
Sierra para arboricultores, sierra manual curva . . . . . SFS 17
Sierra para arboricultores, sierra manual recta . . . . . SFS 17
Sierras abrasivas, correas . . . . . LG 684
Sierras abrasivas, filtros de aire . . . . . LG 678–684
Sierras abrasivas, piezas eléctricas . . . . . LG 684–686
Sierras de poste de montaje central . . . . . OPE 20
Sierras para arboricultores . . . . . SFS 16–17
Silenciador, Briggs & Stratton . . . . . LG 806–807
Silenciador, Cub Cadet . . . . . LG 807
Silenciador, Gravely . . . . . LG 807
Silenciador, Honda . . . . . LG 807–808
Silenciador, Kohler . . . . . LG 808–809
Silenciador, Murray . . . . . LG 809
Silenciador, Snapper . . . . . LG 809
Silenciador, Tecumseh . . . . . LG 809–810
Silenciador, Toro . . . . . LG 810
Silenciador, Wheel Horse . . . . . LG 810
Silenciador, Wisconsin . . . . . LG 810
SILENCIADORES . . . . . LG 806–810
Simplicity, barras raspadoras para lanzadores de nieve . . . . . LG 849
Simplicity, bujes . . . . . LG 244–245
Simplicity, cojinetes . . . . . LG 244–245
Simplicity, correas . . . . . LG 316
Simplicity, cuchillas . . . . . LG 539–545
Simplicity, embragues eléctricos TDF . . . . . LG 733–741
Sistema de herramienta sin cable, LM300 Oregon® 40V MAX, cortadora de césped . . . . . OPE 16
Sistema de herramienta sin cable, LM400 Oregon® 40V MAX, cortadora de césped . . . . . OPE 17
Sistema de herramienta sin cable, pantallas de punto de venta . . . . . OPE 27–29
Sistema de herramientas inalámbricas, aplicaciones de barras y cadenas Oregon® . . . . . FOR 64
Sistema de herramientas inalámbricas, BL300 Oregon® 40V MAX, sopladora . OPE 18
Sistema de herramientas inalámbricas, cargadores de baterías . . . . . OPE 10
Sistema de herramientas inalámbricas, CS300 Oregon® 40V MAX, motosierra OPE 15
Sistema de herramientas inalámbricas, HT250 Oregon® 40V MAX, cortadora de arbustos . . . . . OPE 21
Sistema de herramientas inalámbricas, PowerNow™ Paquetes de baterías de li-ion . . . . . OPE 10
Sistema de herramientas inalámbricas, PS250 Oregon® 40V MAX, sierra de poste . . . . . OPE 20
Sistema de herramientas inalámbricas, ST275 Oregon® 40V MAX, cortador/bordeador . . . . . OPE 19
Sistema de herramientas inalámbricas, WL275 Oregon® 40V MAX, linterna portátil . . . . . OPE 22
Sistema multiaccesorios sin cable . . . . . OPE 11–14
Skil, aplicaciones de barras y cadenas . . . . . FOR 83
Skil, aplicaciones para ruedas dentadas . . . . . FOR 201
Snapper, adaptadores de cuchilla . . . . . LG 342
Snapper, aplicaciones de barras y cadenas . . . . . FOR 84
Snapper, aplicaciones para ruedas dentadas . . . . . FOR 201
Snapper, barras raspadoras para lanzadores de nieve . . . . . LG 849
Snapper, botas SEAL (todo terreno) . . . . . LG 805
Snapper, bujes . . . . . LG 245–246
Snapper, cables de control . . . . . LG 718–719
Snapper, cinta de freno . . . . . LG 698
Snapper, cojinetes . . . . . LG 245–246
Snapper, conjuntos de ruedas neumáticas . . . . . LG 1044–1046
Snapper, correas . . . . . LG 316–319
Snapper, cuchillas . . . . . LG 545–556
Snapper, deslizaderas para lanzador de nieve . . . . . LG 850
Snapper, discos de propulsión . . . . . LG 727
Snapper, embragues eléctricos TDF . . . . . LG 733–741
Snapper, filtros de combustible en el conducto . . . . . LG 774–776
Snapper, interruptores de detención . . . . . LG 949
Snapper, interruptores de encendido . . . . . LG 942–945
Snapper, interruptores de encendido/apagado . . . . . LG 950
Snapper, interruptores de seguridad . . . . . LG 947–948
Snapper, interruptores TDF . . . . . LG 946–947
Snapper, paletas para lanzador de nieve . . . . . LG 849
Snapper, pernos de cortar para lanzadores de nieve . . . . . LG 852–853
Snapper, piezas de cortadora y sopladora . . . . . LG 1024
Snapper, poleas de arranque manual . . . . . LG 936
Snapper, poleas de propulsión . . . . . LG 840
Snapper, rótulas . . . . . LG 938–939
Snapper, ruedas . . . . . LG 1029–1046
Snapper, silenciadores . . . . . LG 809

Solenoides . . . . . LG 729–730
Solo, aplicaciones de barras y cadenas . . . . . FOR 84–87
Solo, aplicaciones para ruedas dentadas . . . . . FOR 201
Solvente para limpieza . . . . . SFS 94
Solvente, limpieza . . . . . SFS 94
Sopladora manual, Oregon® 40V MAX inalámbrica . . . . . OPE 18
Sopladora, BL300 Oregon® 40V MAX inalámbrica, manual . . . . . OPE 18
Soporte del eje de dirección, AYP . . . . . LG 939
Soporte del eje de dirección, Husqvarna . . . . . LG 939
Soporte para equipo comercial . . . . . SFS 74–76
Soportes, equipo comercial . . . . . SFS 74–76
Spartan, cuchillas . . . . . LG 557
Stanley Hydraulic, aplicaciones de barras y cadenas . . . . . FOR 87
Steiner, cuchillas . . . . . LG 557–558
Stihl, aplicaciones de barras y cadenas . . . . . FOR 88–92
Stihl, aplicaciones para ruedas dentadas . . . . . FOR 201–203
Stihl, bobinas de encendido . . . . . LG 784–787
Stihl, correas . . . . . LG 320
Stihl, cuchillas de cortadora de bordes . . . . . LG 587
Stihl, filtros de aire . . . . . LG 213–216
Stihl, manija de arranque . . . . . LG 931
Stihl, piezas de cortadora y sopladora . . . . . LG 1024–1026
Stihl, poleas de arranque manual . . . . . LG 936
Stihl, resortes de arranque manual . . . . . LG 937
Stihl, tapas de combustible . . . . . LG 773
Stihl, trinquetes y resortes de arranque . . . . . LG 930–931
Sujetadores con forma de E, surtido . . . . . SFS 100
Sujetadores de cable del acelerador . . . . . LG 722
Sujetadores en R . . . . . LG 795
Sulkies, cortadoras de césped . . . . . SFS 77–78
SUMINISTROS DE CAMPO . . . . . SFS 72–107
Sun Joe, aplicaciones de barras y cadenas . . . . . FOR 92–93
SuperTwist Magnum Gatorline™ para ST275 . . . . . OPE 27
Surtido . . . . . SFS 100–104
Surtido de abrazaderas para mangueras . . . . . SFS 104
Surtido de clavijas . . . . . SFS 104
Surtido de pasadores de chaveta . . . . . SFS 100
Surtido de pivotes de cilindro . . . . . SFS 102
Surtido, abrazaderas de manguera . . . . . SFS 104
Surtido, accesorios de acelerador . . . . . SFS 101
Surtido, anillos de retención . . . . . SFS 103
Surtido, boquillas de engrase . . . . . SFS 101
Surtido, clavijas . . . . . SFS 104
Surtido, conectores y bornes eléctricos . . . . . SFS 100
Surtido, empaquetaduras, motores de admisión de 2 tiempos . . . . . SFS 103
Surtido, filtros de combustible dentro del depósito . . . . . SFS 103
Surtido, horquillas . . . . . SFS 100
Surtido, juntas tóricas . . . . . SFS 102
Surtido, pasadores de chaveta . . . . . SFS 100
Surtido, pasadores de dientes del arado . . . . . SFS 102
Surtido, pasadores de resorte . . . . . SFS 102
Surtido, perno y tuercas de cabeza hexagonal métricas . . . . . SFS 101
Surtido, perno y tuercas de cabeza hexagonal métricos . . . . . SFS 101
Surtido, pernos de tope . . . . . SFS 104–105
Surtido, pivotes de cilindro . . . . . SFS 102
Surtido, resortes de extensión . . . . . SFS 104
Surtido, resortes de torsión . . . . . SFS 104
Surtido, sujetadores con forma de E . . . . . SFS 100
Surtido, tornillos de cabeza con hueco hexagonal . . . . . SFS 101
Sutech, cuchillas . . . . . LG 559
Swisher, conjuntos semineumáticos de ruedas sin pinchaduras . . . . . LG 1044–1046
Swisher, cuchillas . . . . . LG 559

T

Tabla de aplicación Gator® SpeedLoad™ . . . . . LG 974–978
Tabla de bujes por tipo . . . . . LG 249
Tabla de clasificación de las cadenas de motosierras Oregon® . . . . . FOR 3
Tabla de correas por tamaño . . . . . LG 250–258
Tabla de cuchillas de cortadoras de bordes por tamaño . . . . . LG 589
Tabla de cuchillas por tamaño . . . . . LG 350–366
Tabla de resolución de problemas de correa . . . . . LG 338–339
Tabla, aplicaciones de barras y cadenas . . . . . FOR 21–97
Tabla, cadena de motosierra especificación por clasificación . . . . . FOR 140–141
Tabla, cadena de motosierra, conversiones de longitud y recuento de eslabones de transmisión . . . . . FOR 147
Tabla, clasificación ANSI de cadenas de motosierras . . . . . FOR 2
Tabla, combinaciones de barras y cadenas . . . . . FOR 100–101
Tabla, piezas de repuesto de cadenas de motosierra . . . . . FOR 143
Tabla, ruedas dentadas de motosierras, aplicación por modelos de sierra . . . . . FOR 187–203
Tabla, ruedas dentadas de motosierras, aplicación, por número de pieza de Oregon® . . . . . FOR 204–208
Tablas de referencia de los juegos de carburadores . . . . . LG 634–674
Tacómetro inalámbrico . . . . . SFS 67
Tacómetro, inalámbrico . . . . . SFS 67
Tanaka, aplicaciones de barras y cadenas . . . . . FOR 93–95
Tanaka, aplicaciones para ruedas dentadas . . . . . FOR 203
Tanaka, cuchillas de cortadora de bordes . . . . . LG 588
Tanaka, piezas de cortadora y sopladora . . . . . LG 1026
Tanaka, tapas de combustible . . . . . LG 773
Tanques de combustible . . . . . LG 770
Tanza de cortadora de bordes para la recortadora de hilo inalámbrica ST275 . . . . . OPE 26
Tanza de cortadora de bordes, Biotrim™ . . . . . LG 978
Tanza de cortadora de bordes, FlexiBlade™ . . . . . LG 984
Tanza de cortadora de bordes, Platinum Gatorline™ . . . . . LG 979
Tanza de cortadora de bordes, SuperTwist Magnum Gatorline™ . . . . . LG 979
Tanza de cortadora, cortadora . . . . . LG 985
Tanza de cortadora, Gator® SpeedLoad™ . . . . . LG 973
Tanza de cortadora, longitudes pre cortadas Gatorline™ . . . . . LG 983
Tanza de cortadora, Red Round Gatorline™ . . . . . LG 983
Tanza de cortadora, Round Gatorline™ . . . . . LG 981
Tanza de cortadora, Round Magnum Gatorline™ . . . . . LG 980
Tanza de cortadora, Square Gatorline™ . . . . . LG 981
Tanza de cortadora, Square Magnum Gatorline™ . . . . . LG 980
TANZA Y CABEZAL DE CORTADORA DE BORDES . . . . . LG 966–1015
Tapas de combustible . . . . . LG 770–773
Tapas de combustible, Briggs & Stratton . . . . . LG 770
Tapas de combustible, Echo . . . . . LG 770–771
Tapas de combustible, Exmark . . . . . LG 771
Tapas de combustible, Homelite . . . . . LG 771
Tapas de combustible, Honda . . . . . LG 771
Tapas de combustible, Kawasaki . . . . . LG 772
Tapas de combustible, Maruyama . . . . . LG 772
Tapas de combustible, motosierras . . . . . LG 690
Tapas de combustible, motosierras . . . . . LG 690
Tapas de combustible, MTD . . . . . LG 772
Tapas de combustible, Scag . . . . . LG 772
Tapas de combustible, Shindaiwa . . . . . LG 772
Tapas de combustible, Stihl . . . . . LG 773
Tapas de combustible, Tanaka . . . . . LG 773
Tapas de combustible, Toro . . . . . LG 773
Tapón de llenado de aceite, Briggs & Stratton . . . . . LG 750
Tapón de llenado de aceite, Honda . . . . . LG 756
Tapones de expansión . . . . . LG 632–633
Tapones de expansión del carburador . . . . . LG 632–633
Tecumseh, arrancadores de 120V para lanzadores de nieve . . . . . LG 861
Tecumseh, arrancadores manuales . . . . . LG 922–925
Tecumseh, bobinas de encendido . . . . . LG 784–787
Tecumseh, carburadores . . . . . LG 598–601
Tecumseh, cubas del flotador del carburador . . . . . LG 625
Tecumseh, diafragmas del carburador . . . . . LG 623
Tecumseh, empaquetadura . . . . . LG 758–759
Tecumseh, engranajes del arrancador eléctrico . . . . . LG 929
Tecumseh, filtros de aceite . . . . . LG 814–819
Tecumseh, filtros de aire, espuma . . . . . LG 219
Tecumseh, filtros de aire, papel . . . . . LG 216–218
Tecumseh, filtros de combustible en el conducto . . . . . LG 774–776
Tecumseh, flotadores del carburador . . . . . LG 625
Tecumseh, juego de empaquetaduras . . . . . LG 758
Tecumseh, juegos de carburadores . . . . . LG 608–609
Tecumseh, llaves de encendido para lanzadores de nieve . . . . . LG 861
Tecumseh, manija de arranque . . . . . LG 931
Tecumseh, motores de arranque . . . . . LG 922
Tecumseh, peras cebadoras . . . . . LG 630
Tecumseh, platinos y condensador . . . . . LG 789
Tecumseh, poleas de arranque manual . . . . . LG 936
Tecumseh, sello de aceite . . . . . LG 759
Tecumseh, silenciador . . . . . LG 809–810
Tecumseh, tabla de referencia de carburadores . . . . . LG 594–595
Tecumseh, válvulas de aguja de admisión del carburador . . . . . LG 629
Tenazas de elevación para troncos . . . . . SFS 18
Tenazas de elevación, troncos . . . . . SFS 18
Tender, Battery . . . . . LG 743
Tensores de cadena, motosierras . . . . . LG 686–687
Terminales para bujías . . . . . LG 787–788
TIENDAS MINORISTAS . . . . . SFS 4–23
Tillotson, carburador . . . . . LG 595
Tillotson, juegos de carburadores . . . . . LG 609–610
Tillotson, válvulas de aguja de admisión del carburador . . . . . LG 629
Toallitas húmedas Wypall pre humedecidas . . . . . SFS 68
Toallitas húmedas, Wypall pre humedecidas . . . . . SFS 68
Tornillo de banco para limar troncos . . . . . SFS 14

2019 Índice Alfabético – ES

Tornillo de banco, limado de troncos . . . SFS 14
Tornillos de cabeza con hueco hexagonal, surtido . . . SFS 101
Toro, aplicaciones de barras y cadenas. . . . FOR 95
Toro, barras raspadoras para lanzadores de nieve . . . LG 849
Toro, cables de control . . . LG 719–720
Toro, cojinetes . . . LG 247
Toro, conjuntos de ruedas neumáticas . . . LG 1044–1046
Toro, conjuntos semineumáticos de ruedas sin pinchaduras. . . . LG 1044–1046
Toro, correas . . . LG 320–323
Toro, cuchillas . . . LG 560–573
Toro, deslizaderas para lanzador de nieve . . . LG 851
Toro, embragues eléctricos TDF. . . . LG 733–741
Toro, filtros de aire . . . LG 219–220
Toro, filtros de combustible en el conducto . . . LG 774–776
Toro, interruptores de detención . . . LG 949
Toro, interruptores de encendido/apagado. . . . LG 949
Toro, interruptores de seguridad . . . LG 947–948
Toro, interruptores TDF . . . LG 946–947
Toro, manija de cerrojo. . . . LG 802
Toro, paletas para lanzador de nieve . . . LG 847
Toro, paletas para lanzador de nieve . . . LG 851
Toro, ruedas. . . . LG 1029–1046
Toro, ruedas intermedias . . . LG 834
Toro, ruedas/rodillos antidesbroce . . . LG 1037–1042
Toro, silenciador . . . LG 810
Toro, tapas de combustible . . . LG 773
Toro, vástagos . . . LG 905
Tratamiento del motor Sea Foam . . . SFS 81
Tratamiento del motor, Sea Foam. . . . SFS 81
Tratamientos del motor . . . SFS 81
Tratamientos, motores. . . . SFS 81
Troy-Bilt, aplicaciones de barras y cadenas . . . FOR 95–96
Troy-Bilt, correas . . . LG 324
Troy-Bilt, cuchillas . . . LG 573–576
Troy-Bilt, cuchillas de cortadora de bordes . . . LG 588
Tubo, silenciador Honda . . . LG 807–808
Tubos internos . . . LG 956–957
Tuercas de barra, motosierras . . . LG 686
Tuercas de seguridad. . . . SFS 105
Tuercas de vástagos . . . SFS 105
Tuercas KEPS . . . SFS 105
Tuercas, barras de motosierras. . . . LG 686
Tuercas, de seguridad . . . SFS 105
Tuercas, KEPS . . . SFS 105
Tuercas, vástago . . . SFS 105
Tuercas, vástagos . . . LG 910

U

Unión de extremo de la biela . . . LG 938–939
Uniones de cables . . . LG 742
Uniones de cables . . . LG 722

V

Válvula de cierre del conducto del combustible . . . LG 766–767
Válvula de drenaje de aceite. . . . LG 760
Válvula para herramientas de afilar . . . SFS 66
Válvula Refacer . . . SFS 67
Válvula, drenaje de aceite . . . LG 760
Válvulas de admisión, Honda . . . LG 755
Válvulas de aguja. . . . LG 628–629
Válvulas de aguja de admisión . . . LG 628–629
Válvulas de aguja de admisión del carburador. . . . LG 628–629
Válvulas de aguja de admisión del carburador Oregon® . . . LG 629
Válvulas de cierre, conducto de combustible . . . LG 766–767
Válvulas de escape, Honda . . . LG 755
Válvulas del flotador . . . LG 628–629
Varilla del aceite, Honda . . . LG 756
Vástago de válvula para herramienta para pescar . . . SFS 68
VÁSTAGOS . . . LG 869–910
Vástagos de la válvula para neumáticos sin cámara . . . LG 957
Vástagos de válvulas, neumáticos sin cámara. . . . LG 957
Vástagos, AMF . . . LG 869
Vástagos, Ariens . . . LG 869
Vástagos, AYP. . . . LG 870–876
Vástagos, Blade. . . . LG 869–910
Vástagos, Bobcat . . . LG 874–875
Vástagos, Bunton . . . LG 874–875
Vástagos, Bush Hog . . . LG 876–877
Vástagos, Caroni . . . LG 877
Vástagos, Cub Cadet . . . LG 878–883
Vástagos, Dixie Chopper . . . LG 883
Vástagos, Dixon. . . . LG 883–884
Vástagos, Excel . . . LG 884
Vástagos, Exmark . . . LG 884–889
Vástagos, Ferris . . . LG 889
Vástagos, Gilson . . . LG 891
Vástagos, Grasshopper . . . LG 890
Vástagos, Gravely . . . LG 890–891
Vástagos, Great Dane . . . LG 891
Vástagos, Husqvarna. . . . LG 870–876
Vástagos, Hustler. . . . LG 884
Vástagos, John Deere . . . LG 891–893
Vástagos, Lawn Chief . . . LG 869
Vástagos, MTD . . . LG 893–901
Vástagos, Murray. . . . LG 902
Vástagos, Noma . . . LG 869
Vástagos, Roper . . . LG 903–904
Vástagos, Scag . . . LG 903
Vástagos, Sears . . . LG 903–904
Vástagos, Toro . . . LG 905
Vástagos, Wright Stander . . . LG 905
Visor de seguridad . . . SFS 120
Visor, de seguridad . . . SFS 120

W

Walker, adaptadores de cuchillas. . . . LG 342
Walker, conjuntos semineumáticos de ruedas sin pinchaduras . . . LG 1044–1046
Walker, correas. . . . LG 325
Walker, cuchillas . . . LG 576
Waner, embragues eléctricos TDF . . . LG 733–741
Wen / Wagner, aplicaciones de barras y cadenas . . . FOR 96
Western Auto, aplicaciones para ruedas dentadas . . . FOR 203
Wheel Horse, filtros de aire . . . LG 220
Wheel Horse, ruedas/rodillos antidesbroce . . . LG 1037–1042
Wheel Horse, silenciadores . . . LG 810
Wisconsin Robin, filtros de aire . . . LG 220–222
Wisconsin, cables de control . . . LG 720
Wisconsin, filtros de aire. . . . LG 220
Wisconsin, silenciadores. . . . LG 810
Woods, correas . . . LG 325–330
Woods, cuchillas . . . LG 577–579
Woods, embragues eléctricos TDF . . . LG 733–741
Worx, aplicaciones de barras y cadenas . . . FOR 97
Wright Stander, conjuntos semineumáticos de ruedas sin pinchaduras. LG 1044–1046
Wright Stander, correas . . . LG 330–331
Wright Stander, cuchillas . . . LG 579–582
Wright Stander, embragues eléctricos TDF . . . LG 733–741
Wright Stander, vástagos . . . LG 905

Y

Yazoo, cojinetes. . . . LG 248
Yazoo, correas . . . LG 297
Yunque ajustable . . . SFS 47
Yunque, ajustable. . . . SFS 47

Z

Zama, carburadores . . . LG 595
Zama, juegos de carburadores . . . LG 614–621
Zama, peras cebadoras . . . LG 632
Zipper, cuchillas . . . LG 583

12-Volt Electric Sure Sharp®, chain saw chain sharpener. . . . . SFS 11
120v Professional Series™ Tools and Accessories . . . . . OPE 30–37
120v Professional Series™, Batteries. . . . . OPE 36
120v Professional Series™, Battery Backpacks . . . . . OPE 36
120v Professional Series™, BHT120VX Hedge Trimmer . . . . . OPE 34
120v Professional Series™, BL120VX Backpack Blower. . . . . OPE 32
120v Professional Series™, C1600 Charger. . . . . OPE 36
120v Professional Series™, EG120VX Edger . . . . . OPE 35
120v Professional Series™, Point of Purchase Display . . . . . OPE 37
120v Professional Series™, ST120VX String Trimmer . . . . . OPE 33
120v Professional Series™, Stick Tool Cable . . . . . OPE 36
2-Cycle, engine oil . . . . . SFS 82
3/4" Pitch, Rivet Spinner Adaptor Kit . . . . . SFS 47
4-1/8" Grinding Wheels, chain saw chain grinders. . . . . SFS 41
4-Way wedge, log splitters . . . . . OPE 47
5-3/4" Grinding Wheels, chain saw chain grinders . . . . . SFS 40

A

Absorbant Oil, Dri. . . . . SFS 68
Accessories, chain saw chain grinders. . . . . SFS 40–41
Accessories, lawn mower blade grinders . . . . . SFS 62
Adaptor Kit, 3/4" pitch rivet spinner. . . . . SFS 47
Adjustable Anvil . . . . . SFS 47
Adjustable Yoke. . . . . LG 805
Aerator Tine . . . . . LG 590
Aerosal Tire Inflator with Hose . . . . . SFS 94
AIR FILTERS . . . . . LG 178–222
Air Filters, Ariens. . . . . LG 179
Air Filters, Briggs & Stratton, foam . . . . . LG 185–189
Air Filters, Briggs & Stratton, paper . . . . . LG 179–185
Air Filters, chain saws . . . . . LG 678–684
Air Filters, cut-off saws . . . . . LG 678–684
Air Filters, Echo. . . . . LG 189–191
Air Filters, Efco . . . . . LG 210
Air Filters, Enginaire . . . . . LG 203
Air Filters, Exmark . . . . . LG 191
Air Filters, Homelite . . . . . LG 191–192
Air Filters, Honda, cover assembly . . . . . LG 196
Air Filters, Honda, foam . . . . . LG 195–196
Air Filters, Honda, paper. . . . . LG 192–194
Air Filters, Husqvarna . . . . . LG 197–198
Air Filters, Kawasaki, foam . . . . . LG 201–203
Air Filters, Kawasaki, paper. . . . . LG 198–201
Air Filters, Kohler, foam . . . . . LG 206–207
Air Filters, Kohler, paper. . . . . LG 203–206
Air Filters, Kubota . . . . . LG 208
Air Filters, Lawn-Boy. . . . . LG 209
Air Filters, Maruyama . . . . . LG 209
Air Filters, McCulloch . . . . . LG 209
Air Filters, Mitsubishi . . . . . LG 210
Air Filters, MTD . . . . . LG 210
Air Filters, Oleo-Mac . . . . . LG 210
Air Filters, Onan. . . . . LG 211
Air Filters, Partner . . . . . LG 211
Air Filters, Poulan . . . . . LG 211–212
Air Filters, RedMax . . . . . LG 212
Air Filters, Shindaiwa . . . . . LG 212–213
Air Filters, shop packs . . . . . LG 178
Air Filters, Stihl . . . . . LG 213–216
Air Filters, Tecumseh, foam . . . . . LG 219
Air Filters, Tecumseh, paper. . . . . LG 216–218
Air Filters, Toro . . . . . LG 219–220
Air Filters, Wheel Horse . . . . . LG 220
Air Filters, Wisconsin. . . . . LG 220
Air Filters, Wisconsin Robin . . . . . LG 220–222
Air Tool, oil . . . . . SFS 83
Allen Wrench Set, t-handle . . . . . SFS 66
Allis-Chalmers, blades. . . . . LG 369
Allis-Chalmers, sprocket applications . . . . . FOR 187
Alpina, sprocket applications . . . . . FOR 187
AMF, anti-scalp wheels/rollers . . . . . LG 1037–1042
AMF, bearings. . . . . LG 243
AMF, belts. . . . . LG 259
AMF, bushings . . . . . LG 243
AMF, idler pulleys. . . . . LG 824
AMF, spindles . . . . . LG 869
AMF, wheels. . . . . LG 1029–1046
ANSI INFORMATION . . . . . FOR 2–4
Anti-Scalp Wheels/Rollers, AMF . . . . . LG 1037–1042
Anti-Scalp Wheels/Rollers, AYP. . . . . LG 1037–1042
Anti-Scalp Wheels/Rollers, Bobcat . . . . . LG 1037–1042
Anti-Scalp Wheels/Rollers, Bolens . . . . . LG 1037–1042
Anti-Scalp Wheels/Rollers, Cub Cadet . . . . . LG 1037–1042
Anti-Scalp Wheels/Rollers, Exmark . . . . . LG 1037–1042
Anti-Scalp Wheels/Rollers, Ferris . . . . . LG 1037–1042
Anti-Scalp Wheels/Rollers, Grasshopper . . . . . LG 1037–1042
Anti-Scalp Wheels/Rollers, Gravely . . . . . LG 1037–1042
Anti-Scalp Wheels/Rollers, John Deere . . . . . LG 1037–1042
Anti-Scalp Wheels/Rollers, Kubota. . . . . LG 1037–1042
Anti-Scalp Wheels/Rollers, MTD . . . . . LG 1037–1042
Anti-Scalp Wheels/Rollers, Murray. . . . . LG 1037–1042
Anti-Scalp Wheels/Rollers, Scag . . . . . LG 1037–1042
Anti-Scalp Wheels/Rollers, Toro . . . . . LG 1037–1042
Anti-Scalp Wheels/Rollers, Wheel Horse . . . . . LG 1037–1042
Anvil, adjustable . . . . . SFS 47
Apparel, rain . . . . . SFS 115
Apron Chaps. . . . . SFS 114
Arborist Saw, curved hand saw . . . . . SFS 17
Arborist Saw, straight hand saw . . . . . SFS 17
Arborist Saws. . . . . SFS 16–17
Ariens, air filters . . . . . LG 179
Ariens, bearings . . . . . LG 225–227
Ariens, belts. . . . . LG 264–266
Ariens, blades. . . . . LG 369–374
Ariens, bushings . . . . . LG 225–227
Ariens, edger blades . . . . . LG 584
Ariens, electric PTO clutches . . . . . LG 733–741
Ariens, ignition switches. . . . . LG 942–945
Ariens, PTO switches. . . . . LG 946–947
Ariens, safety switches . . . . . LG 947–948
Ariens, semi-pneumatic flat-free wheel assemblies . . . . . LG 1044–1046
Ariens, snow thrower bearings . . . . . LG 853–854
Ariens, snow thrower bushings . . . . . LG 853–854
Ariens, snow thrower scraper bars. . . . . LG 847
Ariens, snow thrower shear bolts. . . . . LG 852–853
Ariens, snow thrower skids . . . . . LG 850
Ariens, snow thrower skids . . . . . LG 850
Ariens, spindles. . . . . LG 869
Assortment, cotter pins . . . . . SFS 100
Assortment, e-clips . . . . . SFS 100
Assortment, electrical terminals & connectors . . . . . SFS 100
Assortment, extension springs . . . . . SFS 104
Assortment, gaskets, intake 2-cycle engines . . . . . SFS 103
Assortment, grease fittings . . . . . SFS 101
Assortment, hair pins . . . . . SFS 100
Assortment, hose clamps . . . . . SFS 104
Assortment, in-tank fuel filters . . . . . SFS 103
Assortment, linch pins . . . . . SFS 104
Assortment, metric hex cap screws & nuts . . . . . SFS 101
Assortment, o-rings . . . . . SFS 102
Assortment, roll pins. . . . . SFS 102
Assortment, shoulder bolts . . . . . SFS 104–105
Assortment, snap rings . . . . . SFS 103
Assortment, socket set screws . . . . . SFS 101
Assortment, spring pins . . . . . SFS 102
Assortment, throttle accessories. . . . . SFS 101
Assortment, tiller tine pins . . . . . SFS 102
Assortment, torsion springs. . . . . SFS 104
Assortments . . . . . SFS 100–104
Auto Saw Chain Grinders. . . . . SFS 26–31
Axles, MTD . . . . . LG 938
AYP, anti-scalp wheels/rollers . . . . . LG 1037–1042
AYP, bearings . . . . . LG 227–228
AYP, belts . . . . . LG 259–264
AYP, blade adaptors . . . . . LG 340
AYP, blades . . . . . LG 374–382
AYP, bushings . . . . . LG 227–228
AYP, control cables . . . . . LG 701–703
AYP, drag links . . . . . LG 939
AYP, drive pulleys. . . . . LG 834
AYP, electric PTO clutches . . . . . LG 733–741
AYP, idler pulleys . . . . . LG 824–825
AYP, ignition switches . . . . . LG 942–945
AYP, mower deck suspension parts. . . . . LG 804
AYP, mower hood lock straps . . . . . LG 803
AYP, PTO switches . . . . . LG 946–947
AYP, safety switches . . . . . LG 947–948
AYP, snow thrower skids. . . . . LG 850
AYP, spindles . . . . . LG 870–876
AYP, steering bushing . . . . . LG 939–940
AYP, steering links . . . . . LG 939

2019 Alphabetical Index – EN

AYP, steering sector gear . . . . . LG 939–940
AYP, steering shaft . . . . . LG 940
AYP, steering shaft support . . . . . LG 939
AYP, steering wheel adapter . . . . . LG 939
AYP, wheels . . . . . LG 1029–1046

B

B425E Battery Pack . . . . . OPE 10
B600E Battery Pack . . . . . OPE 10
B650E Battery Pack . . . . . OPE 10
Back Pack Sprayers . . . . . LG 911
Back Pack Sprayers Repair Kits . . . . . LG 911–912
Bad Boy, belts . . . . . LG 266–267
Balancer, lawn mower blades . . . . . SFS 63
Ball Bearings . . . . . LG 223–224
Ball Joints . . . . . LG 938–939
BAR & CHAIN APPLICATIONS . . . . . FOR 21–97
Bar Nuts, chain saws . . . . . LG 686
Batteries . . . . . LG 744
Batteries, 120v Professional Series™ . . . . . OPE 36
Battery Backpacks, 120v Professional Series™ . . . . . OPE 36
Battery, cable end . . . . . LG 744
Battery, cable lug . . . . . LG 743
Battery, cables . . . . . LG 744
Battery, charger . . . . . LG 743
Battery, chargers . . . . . OPE 10
Battery, hydrometer . . . . . LG 744
Battery, packs . . . . . OPE 10
Battery, tender . . . . . LG 743
Battery, terminal cleaner spray . . . . . SFS 95
Battery, terminal cover . . . . . LG 743
Battery, terminal insulator . . . . . LG 743
Battery, terminal lead . . . . . LG 743
Battery, terminal protector spray . . . . . SFS 95
Bead Lube . . . . . SFS 68
Bead Lube Swab . . . . . SFS 68
Bead Seater Tire Inflator, Oregon® . . . . . SFS 70
BEARINGS & BUSHINGS . . . . . LG 223–249
Bearings, AMF . . . . . LG 243
Bearings, Ariens . . . . . LG 225–227
Bearings, AYP . . . . . LG 227–228
Bearings, ball . . . . . LG 223–224
Bearings, Bobcat . . . . . LG 228–230
Bearings, Bunton . . . . . LG 230
Bearings, caged roller . . . . . LG 223
Bearings, Cub Cadet . . . . . LG 231-232
Bearings, Dixon . . . . . LG 232
Bearings, EHP . . . . . LG 227–228
Bearings, Encore . . . . . LG 232
Bearings, Exmark . . . . . LG 233-234
Bearings, Ferris . . . . . LG 234
Bearings, flanged wheel . . . . . LG 224
Bearings, Grasshopper . . . . . LG 234–235
Bearings, Gravely . . . . . LG 235
Bearings, Honda . . . . . LG 235
Bearings, Hustler . . . . . LG 236
Bearings, Jacobsen . . . . . LG 236–237
Bearings, John Deere . . . . . LG 237–238
Bearings, K&S . . . . . LG 238
Bearings, Lawn-Boy . . . . . LG 238–239
Bearings, Little Wonder . . . . . LG 239
Bearings, McLane . . . . . LG 239
Bearings, MTD . . . . . LG 239–242
Bearings, Murray . . . . . LG 242–243
Bearings, Noma . . . . . LG 243
Bearings, Oregon® Magnum, ball . . . . . LG 224
Bearings, rod end . . . . . LG 804
Bearings, Roper . . . . . LG 227–228
Bearings, Scag . . . . . LG 244
Bearings, Sears . . . . . LG 227–228
Bearings, Simplicity . . . . . LG 244–245
Bearings, Snapper . . . . . LG 245–246
Bearings, snow throwers . . . . . LG 853–855
Bearings, tapered roller . . . . . LG 223
Bearings, Toro . . . . . LG 247
Bearings, wheel . . . . . LG 223–224
Bearings, Yazoo . . . . . LG 248
Befco, blades . . . . . LG 382
Belt Grinders, lawn mower blades . . . . . SFS 58–59
Belt Measuring Tool . . . . . LG 331
Belt Rack . . . . . LG 331
Belt Trouble Shooting Chart . . . . . LG 338–339
BELTS . . . . . LG 250–339
Belts by Size, table . . . . . LG 250–258
Belts, AMF . . . . . LG 259
Belts, Ariens . . . . . LG 264–266
Belts, AYP . . . . . LG 259–264
Belts, Bad Boy . . . . . LG 266–267
Belts, Bobcat . . . . . LG 267–269
Belts, Bunton . . . . . LG 269–270
Belts, Bush Hog . . . . . LG 270–271
Belts, Club Car . . . . . LG 272
Belts, Comet . . . . . LG 272
Belts, Country Clipper . . . . . LG 272
Belts, Craftsman . . . . . LG 315
Belts, Cub Cadet . . . . . LG 273–277
Belts, cut-off saws . . . . . LG 684
Belts, Dixie Chopper . . . . . LG 277
Belts, Dixon . . . . . LG 278
Belts, Dynamark . . . . . LG 278
Belts, E-Z Roll . . . . . LG 278
Belts, Encore . . . . . LG 278
Belts, Excel . . . . . LG 279
Belts, Exmark . . . . . LG 279–283
Belts, EZ-Go . . . . . LG 283
Belts, Ferris . . . . . LG 283–284
Belts, Grasshopper . . . . . LG 284–285
Belts, Gravely . . . . . LG 285–287
Belts, Great Dane . . . . . LG 287–288
Belts, Honda . . . . . LG 288
Belts, Husqvarna . . . . . LG 288–292
Belts, Hustler . . . . . LG 279
Belts, industrial polyester cord . . . . . LG 336–337
Belts, John Deere . . . . . LG 292–297
Belts, Kees . . . . . LG 297
Belts, King Kutter . . . . . LG 298
Belts, Kubota . . . . . LG 298–299
Belts, Lawn-Boy . . . . . LG 299
Belts, Lesco . . . . . LG 299
Belts, Little Wonder . . . . . LG 300
Belts, Manco . . . . . LG 300
Belts, Massey Fergunson . . . . . LG 300
Belts, McClane . . . . . LG 300
Belts, MTD . . . . . LG 300–306
Belts, Murray . . . . . LG 306–309
Belts, Noma . . . . . LG 309–310
Belts, Partner . . . . . LG 310
Belts, Polaris ATV . . . . . LG 310
Belts, Poulan Pro . . . . . LG 311
Belts, Power Trim . . . . . LG 311
Belts, premium Aramid cord . . . . . LG 334–335
Belts, Roper . . . . . LG 311–312
Belts, Scag . . . . . LG 312–314
Belts, Scotts . . . . . LG 315
Belts, Sears . . . . . LG 315
Belts, Simplicity . . . . . LG 316
Belts, Snapper . . . . . LG 316–319
Belts, snow thrower . . . . . LG 862–863
Belts, Stihl . . . . . LG 320
Belts, Toro . . . . . LG 320–323
Belts, Troy-Bilt . . . . . LG 324
Belts, Walker . . . . . LG 325
Belts, Woods . . . . . LG 325–330
Belts, Wright Stander . . . . . LG 330–331
Belts, Yazoo . . . . . LG 297
Bench Model Chain Saw Chain Breaker . . . . . SFS 43
Bench Model Chain Saw Chain Rivet Spinner . . . . . SFS 44
Better Outdoors, blades . . . . . LG 383
BHT120VX Hedge Trimmer, 120v Professional Series™ . . . . . OPE 34
Big Bee, blades . . . . . LG 384
BL120VX Backpack Blower, 120v Professional Series™ . . . . . OPE 32
Black & Decker, bar & chain applications . . . . . FOR 22
Black & Decker, edger blades . . . . . LG 584
Blade Adaptors, AYP . . . . . LG 340
Blade Adaptors, Bobcat . . . . . LG 340
Blade Adaptors, Husqvarna . . . . . LG 340
Blade Adaptors, MTD . . . . . LG 340–341
Blade Adaptors, Murray . . . . . LG 342
Blade Adaptors, Sears . . . . . LG 342
Blade Adaptors, Snapper . . . . . LG 342
Blade Adaptors, Walker . . . . . LG 342

Blade Bolts . . . . . SFS 105
Blade Clutch, electric. . . . . LG 733–741
Blade Holders . . . . . LG 340–342
BLADES ADAPTORS . . . . . LG 340–342
Blades by Length, chart . . . . . LG 350–366
Blades, Allis-Chalmers . . . . . LG 369
Blades, Ariens . . . . . LG 369–374
Blades, AYP . . . . . LG 374–382
Blades, Befco . . . . . LG 382
Blades, Better Outdoors . . . . . LG 383
Blades, Big Bee . . . . . LG 384
Blades, Billy Goat . . . . . LG 590
Blades, Bluebird . . . . . LG 590
Blades, Bobcat . . . . . LG 384–388
Blades, Bolens . . . . . LG 388–390
Blades, brush cutter . . . . . LG 1014
Blades, brush cutter clearing saw . . . . . LG 1014
Blades, brush cutter grass. . . . . LG 1014
Blades, Bunton . . . . . LG 390–392
Blades, Bush Hog . . . . . LG 392–394
Blades, Caroni . . . . . LG 395
Blades, chain saw guide bars . . . . . FOR 148–179
Blades, Country Clipper . . . . . LG 395–397
Blades, Craftsman . . . . . LG 397–404
Blades, Cub Cadet . . . . . LG 404–412
Blades, dethatching . . . . . LG 368
Blades, Dixie Chopper . . . . . LG 413–416
Blades, Dixon . . . . . LG 416–428
Blades, DR. . . . . LG 428–430
Blades, Dynamow . . . . . LG 430
Blades, edger . . . . . LG 584–590
Blades, Encore . . . . . LG 431–434
Blades, Everide . . . . . LG 434
Blades, Excel . . . . . LG 470–475
Blades, Exmark. . . . . LG 434–443
Blades, Ferris. . . . . LG 443–446
Blades, Ford/New Holland. . . . . LG 447
Blades, Giant Vac . . . . . LG 447–448
Blades, Goodall . . . . . LG 390–392
Blades, Grasshopper . . . . . LG 448–450
Blades, Gravely . . . . . LG 450–456
Blades, Great Dane . . . . . LG 456–457
Blades, hedge trimmers . . . . . LG 783
Blades, Honda. . . . . LG 457–458
Blades, Huskee . . . . . LG 458
Blades, Husqvarna . . . . . LG 458–470
Blades, Hustler . . . . . LG 470–475
Blades, Ingersoll . . . . . LG 475
Blades, Jacobsen. . . . . LG 476–482
Blades, John Deere. . . . . LG 482–493
Blades, Kees . . . . . LG 494–497
Blades, King Kutter. . . . . LG 497
Blades, Kubota . . . . . LG 497–501
Blades, Land Pride . . . . . LG 501–503
Blades, Lastec . . . . . LG 503–504
Blades, Lawn Mower. . . . . LG 369–583
Blades, Lawn-Boy . . . . . LG 505
Blades, Lesco. . . . . LG 505–508
Blades, Massey Fergunson . . . . . LG 508–511
Blades, MTD. . . . . LG 512–521
Blades, Murray . . . . . LG 522–528
BLADES, OEM EXACT REPLACEMENT. . . . . LG 369–583
Blades, Poulan . . . . . LG 529–533
Blades, Power Trim. . . . . LG 586
Blades, Redhawk . . . . . LG 534–535
Blades, Scag . . . . . LG 535–537
Blades, scalping . . . . . LG 368
Blades, Scotts. . . . . LG 537–539
Blades, Simplicity . . . . . LG 539–545
Blades, Snapper . . . . . LG 545–556
Blades, Spartan. . . . . LG 557
Blades, Steiner . . . . . LG 557–558
Blades, Sutech . . . . . LG 559
Blades, Swisher . . . . . LG 559
Blades, Toro. . . . . LG 560–573
Blades, Troy-Bilt . . . . . LG 573–576
Blades, universal . . . . . LG 368
Blades, Walker . . . . . LG 576
Blades, Woods . . . . . LG 577–579
Blades, Wright Stander. . . . . LG 579–582
Blades, Zipper. . . . . LG 583
Blower, BL300 Oregon® 40V MAX Cordless, hand-held. . . . . OPE 18
Bobcat, anti-scalp wheels/rollers . . . . . LG 1037–1042
Bobcat, ball joints . . . . . LG 938–939
Bobcat, bearings . . . . . LG 228–230
Bobcat, belts . . . . . LG 267–269
Bobcat, blade adaptors . . . . . LG 340
Bobcat, blades . . . . . LG 384–388
Bobcat, bushings . . . . . LG 228–230
Bobcat, control cables . . . . . LG 703
Bobcat, drive pulleys. . . . . LG 835
Bobcat, electric PTO clutches . . . . . LG 733–741
Bobcat, idler pulleys . . . . . LG 825–826
Bobcat, in-line fuel filters . . . . . LG 774–776
Bobcat, pneumatic wheel assemblies . . . . . LG 1044–1046
Bobcat, PTO switches . . . . . LG 946–947
Bobcat, safety switches . . . . . LG 947–948
Bobcat, semi-pneumatic flat-free wheel assemblies. . . . . LG 1044–1046
Bobcat, spindles . . . . . LG 874–875
Bobcat, wheels . . . . . LG 1029–1046
Bolens, anti-scalp wheels/rollers . . . . . LG 1037–1042
Bolens, blades . . . . . LG 388–390
Bolts, blade . . . . . SFS 105
Bolts, handle . . . . . SFS 105
Bolts, self tapping . . . . . SFS 105
Bolts, shoulder . . . . . SFS 105
Bolts, spindles . . . . . LG 910
Boot Liner, neoprene . . . . . SFS 113
Boots, premium leather . . . . . SFS 113
Boots, rubber forestry . . . . . SFS 113
Boxes, lawn mower blades . . . . . SFS 21
Boxes, parts bin. . . . . SFS 21
Brake Band, Scag. . . . . LG 698
Brake Band, Snapper. . . . . LG 698
Brake Cables . . . . . LG 701–720
Brake Cleaner Spray . . . . . SFS 94
Brake, blade. . . . . LG 802
Breaker, bench model chain saw chain. . . . . SFS 43
Breaker, chain saw chain, pocket . . . . . SFS 47
Briggs & Stratton, carburetor diaphragms . . . . . LG 622–623
Briggs & Stratton, carburetor float bowls . . . . . LG 625
Briggs & Stratton, carburetor floats . . . . . LG 624
Briggs & Stratton, carburetor inlet needle valves . . . . . LG 628
Briggs & Stratton, carburetor kits. . . . . LG 602–604
Briggs & Stratton, carburetors . . . . . LG 596
Briggs & Stratton, connecting rods . . . . . LG 750
Briggs & Stratton, electric starter brushes . . . . . LG 927
Briggs & Stratton, electric starter drives. . . . . LG 926–927
Briggs & Stratton, electric starter gears . . . . . LG 927–928
Briggs & Stratton, foam air filters. . . . . LG 185–189
Briggs & Stratton, fuel caps . . . . . LG 770
Briggs & Stratton, gasket sets. . . . . LG 745
Briggs & Stratton, gaskets. . . . . LG 745–749
Briggs & Stratton, ignition coils . . . . . LG 784–787
Briggs & Stratton, in-line fuel filters . . . . . LG 774–776
Briggs & Stratton, mufflers . . . . . LG 806–807
Briggs & Stratton, oil filler plug . . . . . LG 750
Briggs & Stratton, oil filters . . . . . LG 814–819
Briggs & Stratton, oil seals . . . . . LG 749
Briggs & Stratton, paper air filters . . . . . LG 179–185
Briggs & Stratton, piston rings . . . . . LG 750
Briggs & Stratton, points & condenser . . . . . LG 789
Briggs & Stratton, primer bulbs . . . . . LG 629–632
Briggs & Stratton, quick reference chart . . . . . LG 1048–1071
Briggs & Stratton, recoil starter pulleys . . . . . LG 933
Briggs & Stratton, recoil starter springs . . . . . LG 927
Briggs & Stratton, recoil starters . . . . . LG 923
Briggs & Stratton, rings . . . . . LG 750
Briggs & Stratton, rods. . . . . LG 750
Briggs & Stratton, seals . . . . . LG 749
Briggs & Stratton, starter clutch . . . . . LG 929
Briggs & Stratton, starter handle . . . . . LG 930
Briggs & Stratton, starter motors. . . . . LG 915–916
Briggs & Stratton, starter pawls & springs. . . . . LG 930–931
Briggs & Stratton, voltage regulators. . . . . LG 731
Brush Cutter Blades . . . . . LG 1014
Brush Cutter Blades, filing tools . . . . . LG 1015
Brushes, electric starters . . . . . LG 927
Bunton, bearings . . . . . LG 230
Bunton, belts . . . . . LG 269–270
Bunton, blades . . . . . LG 390–392
Bunton, bushings . . . . . LG 230
Bunton, electric PTO clutches . . . . . LG 733–741
Bunton, idler pulleys . . . . . LG 826–827

2019 Alphabetical Index – EN

Bunton, PTO switches . . . LG 946–947
Bunton, safety switches . . . LG 947–948
Bunton, spindles . . . LG 874–875
Bunton, wheels . . . LG 1029–1046
Bush Hog, belts . . . LG 270–271
Bush Hog, blades . . . LG 392–394
Bush Hog, spindles . . . LG 876–877
Bushing, machinery . . . SFS 106
Bushings by Type, chart . . . LG 249
Bushings, AMF . . . LG 243
Bushings, Ariens . . . LG 225–227
Bushings, AYP . . . LG 227–228
Bushings, Bobcat . . . LG 228–230
Bushings, Bunton . . . LG 230
Bushings, Cub Cadet . . . LG 231-232
Bushings, EHP . . . LG 227–228
Bushings, Encore . . . LG 232
Bushings, Exmark . . . LG 233-234
Bushings, Grasshopper . . . LG 234–235
Bushings, Gravely . . . LG 235
Bushings, John Deere . . . LG 237–238
Bushings, K&S . . . LG 238
Bushings, MTD . . . LG 239–242
Bushings, Murray . . . LG 242–243
Bushings, Noma . . . LG 243
Bushings, Roper . . . LG 227–228
Bushings, Scag . . . LG 244
Bushings, Sears . . . LG 227–228
Bushings, Simplicity . . . LG 244–245
Bushings, Snapper . . . LG 245–246

C

C1600 Charger, 120v Professional Series™ . . . OPE 36
C600 Battery Charger . . . OPE 10
C750 Rapid Battery Charger . . . OPE 10
Cable Ties . . . LG 742
Cables, battery . . . LG 744
Cables, brake . . . LG 701–720
Cables, choke . . . LG 701–720
Cables, control . . . LG 701–720
Cables, deck engagement . . . LG 701–720
Cables, drive control . . . LG 701–720
Cables, PTO . . . LG 701–720
Cables, self propelled control . . . LG 701–720
Cables, snow thrower auger control . . . LG 701–720
Cables, snow thrower chute control . . . LG 701–720
Cables, snow thrower steering control . . . LG 701–720
Cables, throttle . . . LG 701–720
Caged Roller Bearings . . . LG 223
Canada Only Fuel Cans . . . SFS 90–91
Cans, fuel . . . SFS 86–88
Carburetor Cleaner, spray . . . SFS 93
Carburetor Diaphragms, Briggs & Stratton . . . LG 622–623
Carburetor Diaphragms, Tecumseh . . . LG 623
Carburetor Float Bowl Gaskets . . . LG 626–627
Carburetor Float Bowl Gaskets, Briggs & Stratton . . . LG 627
Carburetor Float Bowl Gaskets, Honda . . . LG 626–627
Carburetor Float Bowl Gaskets, Lawn-Boy . . . LG 626–627
Carburetor Float Bowl Gaskets, Oregon® . . . LG 626–627
Carburetor Float Bowl Gaskets, Walbro . . . LG 627
Carburetor Float Bowls . . . LG 625
Carburetor Float Bowls, Briggs & Stratton . . . LG 625
Carburetor Float Bowls, Honda . . . LG 625
Carburetor Float Bowls, Tecumseh . . . LG 625
Carburetor Floats . . . LG 624–625
Carburetor Floats, Briggs & Stratton . . . LG 624
Carburetor Floats, Honda . . . LG 624
Carburetor Floats, Oregon® . . . LG 624–625
Carburetor Floats, Tecumseh . . . LG 625
Carburetor Fuel Screens . . . LG 627
Carburetor Inlet Needle Valves . . . LG 628–629
Carburetor Kit Reference Charts . . . LG 634–674
Carburetor Kits . . . LG 602–621
Carburetor Kits, Briggs & Stratton . . . LG 602–604
Carburetor Kits, Cub Cadet . . . LG 604–605
Carburetor Kits, Homelite . . . LG 605
Carburetor Kits, Honda . . . LG 605
Carburetor Kits, Kohler . . . LG 605
Carburetor Kits, Lawn-Boy . . . LG 606
Carburetor Kits, MTD . . . LG 606
Carburetor Kits, Nikki . . . LG 606
Carburetor Kits, Oregon® . . . LG 606–608
Carburetor Kits, Tecumseh . . . LG 608–609
Carburetor Kits, Tillotson . . . LG 609–610
Carburetor Kits, TK . . . LG 608
Carburetor Kits, Walbro . . . LG 608–614
Carburetor Kits, Zama . . . LG 614–621
Carburetor Welch Plugs . . . LG 632–633
Carburetor, Briggs & Stratton . . . LG 596
Carburetor, Honda . . . LG 596–597
Carburetor, Robin . . . LG 596
Carburetor, Tecumseh . . . LG 598–601
Carburetor, Tillotson . . . LG 595
Carburetor, Walbro . . . LG 595
Carburetor, Yamakoyo . . . LG 601
Carburetor, Zama . . . LG 595
CARBURETORS & CARBURETOR PARTS . . . LG 594–674
Carburetors, Complete . . . LG 595–601
Caroni, blades . . . LG 395
Caroni, spindles . . . LG 877
Caster Parts . . . LG 694–695
Catalog, Oregon® . . . SFS 23
Catcher, log splitters . . . OPE 46
CENTRIFUGAL CLUTCHES . . . LG 675
Chain Adjusters, chain saws . . . LG 686–687
Chain Cutter Displays, Oregon® chain saw chain . . . SFS 23
CHAIN ROLLER PARTS . . . LG 676
CHAIN SAW & CUT-OFF SAW PARTS . . . LG 677–693
Chain Saw, air filters . . . LG 678–684
Chain Saw, bar & chain combos . . . FOR 100–101
Chain Saw, bar & chain oil . . . SFS 19, 84
Chain Saw, bar & chain saw chain measuring tool . . . SFS 14
Chain Saw, bar & chain, applications . . . FOR 21–97
Chain Saw, bar & rail dresser tool . . . SFS 13
Chain Saw, bar covers . . . SFS 13
Chain Saw, bar groove cleaning tool . . . SFS 14
Chain Saw, bar mounts . . . FOR 171–177
Chain Saw, bar nuts . . . LG 686
Chain Saw, bar photographs, descriptions, features . . . FOR 154-166
Chain Saw, bar replaceable noses . . . FOR 167
Chain Saw, bars, guide bars, chain saw blades . . . FOR 148–179
Chain Saw, chain adjusters . . . LG 686–687
Chain Saw, chain breaker & chain saw bar nose rivet driver, heavy duty . . . SFS 45
Chain Saw, chain breaker, bench model . . . SFS 43
Chain Saw, chain conversion chart, Oregon® consumer chain P/Ns to Pro chain P/Ns . . . FOR 98
Chain Saw, chain conversion charts, chain lengths & drive link counts . . . FOR 147
Chain Saw, chain cross reference chart, Oregon® & other Brands . . . FOR 138–139
Chain Saw, chain filing chart . . . FOR 141
Chain Saw, chain grinder stand . . . SFS 41
Chain Saw, chain grinders . . . SFS 32–40
Chain Saw, chain grinders 4-1/8" grinding wheels . . . SFS 41
Chain Saw, chain grinders 5-3/4" grinding wheels . . . SFS 40
Chain Saw, chain grinders, breakers & spinners . . . SFS 26–57
Chain Saw, chain grinding chart . . . FOR 141
Chain Saw, chain how to order chain . . . FOR 98
Chain Saw, chain photographs, descriptions, features . . . FOR 111–137
Chain Saw, chain replacements parts . . . FOR 143
Chain Saw, chain rivet spinner, bench model . . . SFS 44
Chain Saw, chain rivet spinner, heavy duty . . . SFS 46
Chain Saw, chain saw oil, wedges, screnches, misc . . . SFS 14, 19–20
Chain Saw, chain scale . . . SFS 47
Chain Saw, chain sharpening kits . . . SFS 10
Chain Saw, chain tensioners . . . LG 686–687
Chain Saw, CS300 Oregon® 40V MAX Cordless . . . OPE 15
Chain Saw, electrical parts . . . LG 684–686
Chain Saw, fuel caps . . . LG 690
Chain Saw, fuel filters . . . LG 691–692
Chain Saw, fuel lines . . . LG 688–690
Chain Saw, guide bars, bars, chain saw blades . . . FOR 148–179
Chain Saw, oil caps . . . LG 690
Chain Saw, primer bulbs . . . LG 690
Chain Saw, sprocket application by Oregon® part number . . . FOR 204–208
Chain Saw, sprocket application by saw model . . . FOR 187–203
Chain Saw, sprocket photographs, descriptions, features . . . FOR 182–186
Chain Saw, sprockets . . . FOR 180–210
Chain Saw, starter pulleys . . . LG 692
Chain Saw, starter springs . . . LG 693
Chain Saw, terminology, parts of a chain, chain sequence . . . FOR 110
Chain Saw, tool bag . . . OPE 23
Chain Saw, wrench . . . LG 677

Chain Sharpener Grinding Wheels . . . LG 687
Chain Tensioners, chain saws . . . LG 686–687
Chain, roller connecting links . . . LG 676
Chain, roller half links . . . LG 676
Chain, roller offset links . . . LG 676
Chain, saw chain . . . FOR 103–147
Chains, tire . . . LG 965
Chaps . . . SFS 114
Charger, battery . . . LG 743
Chart, ANSI saw chain classification . . . FOR 2
Chart, bar & chain applications . . . FOR 21–97
Chart, bar & chain combos . . . FOR 100–101
Chart, chain saw sprockets, application by saw models . . . FOR 187–203
Chart, chain saw sprockets, application, by Oregon® part number . . . FOR 204–208
Chart, saw chain filing specification . . . FOR 140–141
Chart, saw chain length conversions & drive link counts . . . FOR 147
Chart, saw chain replacement parts . . . FOR 143
Chicago Electric, bar & chain applications . . . FOR 22
Choke Cables . . . LG 701–720
Clamps, hose . . . LG 765
Cleaning Solvent . . . SFS 94
Clearing Saw Blades . . . LG 1014
Clevis Pins, display pack . . . LG 799
Clevises . . . LG 793
Club Car, belts . . . LG 272
Clutch, electric PTO . . . LG 733–741
Coils, ignition . . . LG 784–787
Coils, magneto . . . LG 784–787
Comet, belts . . . LG 272
Commercial Equipment Racks . . . SFS 74–76
Commercial Mower, caster wheel parts . . . LG 694–695
Commercial Mower, spacers & bushings . . . LG 697
Commercial Mower, wheel motors . . . LG 696
COMMERCIAL PARTS . . . LG 694–698
Compact Electric Rivet Spinner . . . SFS 42
Complete Replacement Carburetors . . . LG 595–601
Compression Tester . . . SFS 65
Compressor, rings . . . SFS 66
Compressor, valve spring . . . SFS 66
Connecting Rods, Briggs & Stratton . . . LG 750
Connecting Rods, Honda . . . LG 755
CONTROL CABLES . . . LG 699–723
Control Cables, AYP . . . LG 701–703
Control Cables, Bobcat . . . LG 703
Control Cables, Cub Cadet . . . LG 703–708
Control Cables, Dixie Chopper . . . LG 708
Control Cables, Excel . . . LG 708
Control Cables, Gravely . . . LG 708
Control Cables, Honda . . . LG 708–709
Control Cables, Hustler . . . LG 708
Control Cables, John Deere . . . LG 709
Control Cables, McClane . . . LG 709
Control Cables, MTD . . . LG 710–715
Control Cables, Murray . . . LG 715–717
Control Cables, push-pull . . . LG 720–721
Control Cables, Scag . . . LG 717–718
Control Cables, Snapper . . . LG 718–719
Control Cables, Toro . . . LG 719–720
Control Cables, universal . . . LG 699–701
Control Cables, Wisconsin . . . LG 720
Cordless Multi-Attachment System . . . OPE 11–14
Cordless Multi-Attachment, EG600 Edger . . . OPE 13
Cordless Multi-Attachment, EX600 Extension . . . OPE 12
Cordless Multi-Attachment, HT600 Hedge Trimmer . . . OPE 13
Cordless Multi-Attachment, PH600 Power Head . . . OPE 12
Cordless Multi-Attachment, PS600 Pole Saw . . . OPE 12
Cordless Multi-Attachment, ST600 String Trimmer . . . OPE 13
Cordless Tool System, Battery Chargers . . . OPE 10
Cordless Tool System, BL300 Oregon® 40V MAX, blower . . . OPE 18
Cordless Tool System, CS300 Oregon® 40V MAX, chain saw . . . OPE 15
Cordless Tool System, HT250 Oregon® 40V MAX, hedge trimmer . . . OPE 21
Cordless Tool System, LM300 Oregon® 40V MAX, lawn mower . . . OPE 16
Cordless Tool System, LM400 Oregon® 40V MAX, lawn mower . . . OPE 17
Cordless Tool System, Point of Purchase Displays . . . OPE 27–29
Cordless Tool System, PowerNow™ Lithium Ion Battery Packs . . . OPE 10
Cordless Tool System, PS250 Oregon® 40V MAX, pole saw . . . OPE 20
Cordless Tool System, ST275 Oregon® 40V MAX, trimmer/edger . . . OPE 19
Cordless Tool System, WL275 Oregon® 40V MAX, portable light . . . OPE 22
Corona Clipper, bar & chain applications . . . FOR 23
Cotter Pin Assortment . . . SFS 100
Cotter Pins, display pack . . . LG 799
Country Clipper, belts . . . LG 272
Country Clipper, blades . . . LG 395–397
Cover, battery terminal . . . LG 743
Cover, riding mower . . . LG 803
Covers, chain saw bars . . . SFS 13
Craftsman, belts . . . LG 315
Craftsman, blades . . . LG 397–404
Crayons, marking . . . SFS 19
CS1500 Guide Bar . . . OPE 25
CS250 Guide Bar . . . OPE 25
CS300 Guide Bar . . . OPE 25
Cub Cadet, anti-scalp wheels/rollers . . . LG 1037–1042
Cub Cadet, bar & chain applications . . . FOR 25
Cub Cadet, bearings . . . LG 231-232
Cub Cadet, belts . . . LG 273–277
Cub Cadet, blades . . . LG 404–412
Cub Cadet, bushings . . . LG 231-232
Cub Cadet, carburetor kits . . . LG 604–605
Cub Cadet, control cables . . . LG 703–708
Cub Cadet, drive pulleys . . . LG 837
Cub Cadet, electric PTO clutches . . . LG 733–741
Cub Cadet, idler pulleys . . . LG 826–827
Cub Cadet, ignition switches . . . LG 942–945
Cub Cadet, muffler . . . LG 807
Cub Cadet, PTO switches . . . LG 946–947
Cub Cadet, safety switches . . . LG 947–948
Cub Cadet, snow thrower 120V starters . . . LG 861
Cub Cadet, snow thrower bearings . . . LG 854–855
Cub Cadet, snow thrower bronze worm gear . . . LG 856
Cub Cadet, snow thrower bushings . . . LG 854–855
Cub Cadet, snow thrower carburetor kits . . . LG 859
Cub Cadet, snow thrower chute flange keeper . . . LG 855
Cub Cadet, snow thrower chute tilt cable guide . . . LG 856
Cub Cadet, snow thrower clutch lock cam . . . LG 856
Cub Cadet, snow thrower control cables . . . LG 856–859
Cub Cadet, snow thrower ignition key . . . LG 861
Cub Cadet, snow thrower lock plate . . . LG 856
Cub Cadet, snow thrower primer . . . LG 860
Cub Cadet, snow thrower recoil starters . . . LG 860–861
Cub Cadet, snow thrower shave plates . . . LG 848
Cub Cadet, snow thrower steering control trigger . . . LG 856
Cub Cadet, snow thrower wheel . . . LG 856
Cub Cadet, spindles . . . LG 878–883
Cub Cadet, sprocket applications . . . FOR 187
Cupped Steel Washers . . . SFS 106
Cut-Off Saw, air filters . . . LG 678–684
Cut-Off Saw, belts . . . LG 684
Cut-Off Saw, electrical parts . . . LG 684–686
Cutter, trimmer line . . . LG 985
Cutting, chain saw chain . . . FOR 103–147

D

Damper Cylinders . . . LG 695
Dayton, sprocket applications . . . FOR 187
Deck Engagement Cables . . . LG 701–720
Deck Leveling Tool, lawn mowers . . . SFS 64
Depth Gauge Tools, chain saw chain . . . SFS 8
Dethatching Blades . . . LG 368
DeWalt, bar & chain applications . . . FOR 26
Diaphragms, carburetors . . . LG 622–623
Diodes . . . LG 741
Dipstick, Honda . . . LG 756
Display Hook, 5" . . . SFS 20
Display Pack, clevis pins . . . LG 799
Display Pack, cotter pins . . . LG 799
Display Pack, e-rings . . . LG 799
Display Pack, grease fittings . . . LG 800
Display Pack, hair pins . . . LG 800
Display Pack, locking pins . . . LG 800
Display Pack, machinery keys . . . LG 801
Display Pack, shaft collars . . . LG 801
Display Pack, spring pins . . . LG 801
Display Pack, woodruff keys . . . LG 801
Display Rack, safety eyewear . . . SFS 20
Disposable Grease Gun . . . SFS 12–13
Disposable Respirator Masks . . . SFS 120
Dixie Chopper, belts . . . LG 277
Dixie Chopper, blades . . . LG 413–416
Dixie Chopper, control cables . . . LG 708
Dixie Chopper, electric PTO clutches . . . LG 733–741

2019 Alphabetical Index – EN

Dixie Chopper, idler pulleys . . . LG 827
Dixie Chopper, semi-pneumatic flat-free wheel assemblies . . . LG 1044–1046
Dixie Chopper, spindles . . . LG 883
Dixon, bearings . . . LG 232
Dixon, belts . . . LG 278
Dixon, blades . . . LG 416–428
Dixon, pneumatic wheel assemblies . . . LG 1044–1046
Dixon, semi-pneumatic flat-free wheel assemblies . . . LG 1044–1046
Dixon, spindles . . . LG 883–884
Dolmar, bar & chain applications . . . FOR 26–29
Dolmar, recoil starter springs . . . LG 937
Dolmar, sprocket applications . . . FOR 187–188
Drag Links . . . LG 939
Drain Pan, oil . . . SFS 67
Draw Pins . . . LG 795
Drawbars . . . LG 793
Dressing Tools, chain saw chain grinders grinding wheels . . . SFS 41
Drive Control Cables . . . LG 701–720
Drive Disc, snow thrower . . . LG 851
Drive Discs . . . LG 726
DRIVE PARTS . . . LG 724–728
Drive Pulleys . . . LG 834–840
Drive Pulleys by Size, chart . . . LG 841
Drive Pulleys, AYP . . . LG 834
Drive Pulleys, Bobcat . . . LG 835
Drive Pulleys, Cub Cadet . . . LG 837
Drive Pulleys, Exmark . . . LG 836
Drive Pulleys, MTD . . . LG 837–838
Drive Pulleys, Murray . . . LG 838–839
Drive Pulleys, OEM replacement . . . LG 834–840
Drive Pulleys, Power Trim . . . LG 839
Drive Pulleys, Scag . . . LG 839–840
Drive Pulleys, Snapper . . . LG 840
Drive Sprockets, chain saws . . . FOR 180–210
Dynamark, belts . . . LG 278
Dynamow, blades . . . LG 430

E

E-Clips, assortment . . . SFS 100
E-Rings, display pack . . . LG 799
E-Z Roll, belts . . . LG 278
Earmuff, hearing safety . . . SFS 121
Earth Quake, edger blades . . . LG 584
Earthquake, bar & chain applications . . . FOR 29
Earthwise, bar & chain applications . . . FOR 29–30
Echo, air filters . . . LG 189–191
Echo, bar & chain applications . . . FOR 30–33
Echo, edger blades . . . LG 584
Echo, fuel caps . . . LG 770–771
Echo, recoil starter pulleys . . . LG 933
Echo, recoil starter springs . . . LG 937
Echo, sprocket applications . . . FOR 188–189
Echo, starter pawls & springs . . . LG 930–931
Echo, trimmer & blower parts . . . LG 1016–1018
EDGER BLADES . . . LG 584–590
Edger Blades by Length, chart . . . LG 589
Edger Blades, Ariens . . . LG 584
Edger Blades, Black & Decker . . . LG 584
Edger Blades, Earth Quake . . . LG 584
Edger Blades, Echo . . . LG 584
Edger Blades, Homelite . . . LG 584
Edger Blades, Husqvarna . . . LG 585
Edger Blades, Jacobesn . . . LG 585
Edger Blades, John Deere . . . LG 585
Edger Blades, Kawasaki . . . LG 585
Edger Blades, Lawn-Boy . . . LG 585
Edger Blades, Lesco . . . LG 585
Edger Blades, Little Wonder . . . LG 585
Edger Blades, Maruyama . . . LG 586
Edger Blades, McClane . . . LG 586
Edger Blades, McCulloch . . . LG 586
Edger Blades, MTD . . . LG 586
Edger Blades, Power Trim . . . LG 586
Edger Blades, RedMax . . . LG 587
Edger Blades, Ryobi . . . LG 587
Edger Blades, Sears . . . LG 587
Edger Blades, Shindaiwa . . . LG 587
Edger Blades, Stihl . . . LG 587
Edger Blades, Tanaka . . . LG 588
Edger Blades, Troy-Bilt . . . LG 588
Edger Blades, universal . . . LG 588–589
Edger Blades, Weed Eater . . . LG 588
Efco, air filters . . . LG 210
Efco, bar & chain applications . . . FOR 33–35
Efco, sprocket applications . . . FOR 189
EG120VX Edger, 120v Professional Series™ . . . OPE 35
EG600 Edger, Cordless Multi-Attachment . . . OPE 13
EHP Bearings . . . LG 227–228
EHP Bushings . . . LG 227–228
Electric PTO Clutch . . . LG 733–741
Electric Starter, brushes . . . LG 927
Electric Starter, drives . . . LG 926–927
Electric Starter, gears . . . LG 927–928
Electric Starter, motors . . . LG 915–921
Electric Starter, parts . . . LG 926–928
ELECTRICAL PARTS . . . LG 729–744
Electrical Parts, chain saws . . . LG 684–686
Electrical Parts, cut-off saws . . . LG 684–686
Electrical Terminals & Connectors, assortment . . . SFS 100
Encore, bearings . . . LG 232
Encore, belts . . . LG 278
Encore, blades . . . LG 431–434
Encore, bushings . . . LG 232
Encore, electric PTO clutches . . . LG 733–741
Enginaire, air filters . . . LG 203
ENGINE PARTS . . . LG 745–760
Engine Treatment, sea foam . . . SFS 81
Engine Treatments . . . SFS 81
Engine, Only One™ 2-Cycle . . . SFS 19
Ethanol Free Fuel, VP Fuels . . . SFS 79–81
Everide, blades . . . LG 434
EX600 Extension, Cordless Multi-Attachment . . . OPE 12
Excel, belts . . . LG 279
Excel, blades . . . LG 470–475
Excel, control cables . . . LG 708
Excel, idler pulleys . . . LG 827
Excel, spindles . . . LG 884
Exhaust Valves, Honda . . . LG 755
Exmark, air filters . . . LG 191
Exmark, anti-scalp wheels/rollers . . . LG 1037–1042
Exmark, ball joints . . . LG 938–939
Exmark, bearings . . . LG 233-234
Exmark, belts . . . LG 279–283
Exmark, blades . . . LG 434–443
Exmark, bushings . . . LG 233-234
Exmark, drive pulleys . . . LG 836
Exmark, electric PTO clutches . . . LG 733–741
Exmark, fuel caps . . . LG 771
Exmark, idler pulleys . . . LG 827–828
Exmark, pneumatic wheel assemblies . . . LG 1044–1046
Exmark, PTO switches . . . LG 946–947
Exmark, safety switches . . . LG 947–948
Exmark, semi-pneumatic flat-free wheel assemblies . . . LG 1044–1046
Exmark, spindles . . . LG 884–889
Extension Springs, assortment . . . SFS 104
Extractor, fuel . . . SFS 67
Extractor, oil . . . SFS 67
Eye-Ware, safety . . . SFS 117–119
EZ-Go, belts . . . LG 283

F

Fairmont Hydraulic, bar & chain applications . . . FOR 35–36
Fast Orange Hand Cleaner . . . SFS 91
Feeler Gauge . . . SFS 65
Felling Lever . . . SFS 18
Felling Wedges . . . SFS 14
Ferris, anti-scalp wheels/rollers . . . LG 1037–1042
Ferris, bearings . . . LG 234
Ferris, belts . . . LG 283–284
Ferris, blades . . . LG 443–446
Ferris, spindles . . . LG 889
Fiber Washers . . . SFS 106
FIELD SUPPLIES . . . SFS 72–107
File Guide, chain saw chain . . . SFS 9
File Handles, chain saw chain . . . SFS 9
Filing Tools for Brush Cutter Blades . . . LG 1015
Filter Bowl . . . LG 765
Filters, air . . . LG 178-222

Filters, fuel in-line . . . LG 774–776
Filters, hydraulic oil . . . LG 819
Filters, oil . . . LG 814–819
Fittings, fuel . . . LG 765–766
Fix-It Fuel, VP Fuels . . . SFS 81
Flammable Liquids Storage Cabinets . . . SFS 89–90
Flanged Wheel Bearings . . . LG 224
Flat Steel Washers . . . SFS 106
Float Bowl Gaskets . . . LG 626–627
Float Bowl Gaskets, Briggs & Stratton . . . LG 627
Float Bowl Gaskets, Honda . . . LG 626–627
Float Bowl Gaskets, Lawn-Boy . . . LG 626–627
Float Bowl Gaskets, Oregon® . . . LG 626–627
Float Bowl Gaskets, Walbro . . . LG 627
Float Bowls, carburetors . . . LG 625
Float Valves . . . LG 628–629
Floats, carburetors . . . LG 624–625
Flywheel Keys . . . LG 789
Flywheel Puller . . . SFS 65
Flywheel Shear Pins . . . LG 789
Ford/New Holland, blades . . . LG 447
Frontier, sprocket applications . . . FOR 189
Fuel Barbs . . . LG 765
Fuel Cans . . . SFS 86–88
Fuel Cans, Canada only . . . SFS 90–91
Fuel Caps . . . LG 770–773
Fuel Caps, Briggs & Stratton . . . LG 770
Fuel Caps, chain saws . . . LG 690
Fuel Caps, Echo . . . LG 770–771
Fuel Caps, Exmark . . . LG 771
Fuel Caps, Homelite . . . LG 771
Fuel Caps, Honda . . . LG 771
Fuel Caps, Kawasaki . . . LG 772
Fuel Caps, Maruyama . . . LG 772
Fuel Caps, MTD . . . LG 772
Fuel Caps, Scag . . . LG 772
Fuel Caps, Shindaiwa . . . LG 772
Fuel Caps, Stihl . . . LG 773
Fuel Caps, Tanaka . . . LG 773
Fuel Caps, Toro . . . LG 773
Fuel Extractor . . . SFS 67
Fuel Filter, bowl type . . . LG 765
Fuel Filters, chain saws . . . LG 691–692
Fuel Filters, in-line . . . LG 774–776
Fuel Filters, in-tank . . . LG 776–779
Fuel Fittings . . . LG 765
Fuel Line . . . LG 761–763
FUEL LINE & ACCESSORIES . . . LG 761–780
Fuel Line Shut-Off Valves . . . LG 766–767
Fuel Line Shut-Offs . . . LG 766–767
Fuel Line, Oregon® . . . LG 761
Fuel Line, Tygon® . . . LG 761
Fuel Lines, chain saws . . . LG 688–690
Fuel Pump . . . LG 767
Fuel Screens . . . LG 627
Fuel Stabilizer . . . SFS 85
Fuel System Breathers . . . LG 763–764
Fuel System Grommets . . . LG 763–764
Fuel System Kits . . . LG 764–765
Fuel System Vents . . . LG 763–764
Fuel Tank Bushing . . . LG 767
Fuel Tank Strap, Scag . . . LG 698
Fuel Tanks . . . LG 770
Fuel Tanks, Honda . . . LG 770
Full-Wrap Chaps . . . SFS 114
Fuse Holders . . . LG 742
Fuses . . . LG 742

G

Gasket Scraper . . . LG 760
Gasket Set, Kohler . . . LG 757
Gasket Set, Tecumseh . . . LG 757
Gasket Sets, Briggs & Stratton . . . LG 745
Gasket Sets, Honda . . . LG 751
Gasket, Kohler . . . LG 757
Gasket, Tecumseh . . . LG 758–759
Gaskets, 2-cycle engine intake . . . LG 621
Gaskets, Briggs & Stratton . . . LG 745–749
Gaskets, Honda . . . LG 751–753
Gaskets, intake 2-cycle engines assortment . . . SFS 103
Gator® SpeedLoad™ Application Chart . . . LG 974–978
Gator® SpeedLoad™ Replacement Parts . . . LG 973
Gator® SpeedLoad™ Replacement Trimmer Line . . . LG 973
Gator® SpeedLoad™ Trimmer Head . . . LG 968–978
Gatorline Trimmer Line for ST275 . . . OPE 26
Gauge, feeler . . . SFS 65
Gear Drive Power . . . OPE 20
Gear Lubricant, "0" . . . SFS 92
Gear Lubricant, "00" . . . SFS 92
Gear Lubricant, 80–90 WT . . . SFS 92
Gear Puller . . . SFS 65
Gears, electric starters . . . LG 927–928
Generac, oil filters . . . LG 814–819
Giant Vac, blades . . . LG 447–448
Gilson, spindles . . . LG 891
Glasses, safety . . . SFS 117–119
Gloves . . . SFS 116
Glue, Gorilla . . . SFS 97
Goggles, safety . . . SFS 117–119
Goodall, blades . . . LG 390–392
Gorilla Glue . . . SFS 97
GRASS BAGS . . . LG 781–782
Grass Catchers . . . LG 781–782
Grasshopper, anti-scalp wheels/rollers . . . LG 1037–1042
Grasshopper, bearings . . . LG 234–235
Grasshopper, belts . . . LG 284–285
Grasshopper, blades . . . LG 448–450
Grasshopper, bushings . . . LG 234–235
Grasshopper, electric PTO clutches . . . LG 733–741
Grasshopper, idler pulleys . . . LG 828
Grasshopper, pneumatic wheel assemblies . . . LG 1044–1046
Grasshopper, PTO switches . . . LG 946–947
Grasshopper, safety switches . . . LG 947–948
Grasshopper, spindles . . . LG 890
Gravely, anti-scalp wheels/rollers . . . LG 1037–1042
Gravely, bearings . . . LG 235
Gravely, belts . . . LG 285–287
Gravely, blades . . . LG 450–456
Gravely, bushings . . . LG 235
Gravely, control cables . . . LG 708
Gravely, electric PTO clutches . . . LG 733–741
Gravely, muffler . . . LG 807
Gravely, PTO switches . . . LG 946–947
Gravely, safety switches . . . LG 947–948
Gravely, semi-pneumatic flat-free wheel assemblies . . . LG 1044–1046
Gravely, spindles . . . LG 890–891
Grease "0" . . . LG 728
Grease "00" . . . LG 728
Grease Cartridges . . . SFS 12
Grease Fittings, assortment . . . SFS 101
Grease Fittings, display pack . . . LG 800
Grease Gun, disposable . . . SFS 12–13
Grease Guns, chain saw bars . . . SFS 12–13
Grease, High Temp, 14oz. cartridge . . . SFS 92
Great Dane, belts . . . LG 287–288
Great Dane, blades . . . LG 456–457
Great Dane, electric PTO clutches . . . LG 733–741
Great Dane, spindles . . . LG 891
Green Machine, recoil starter pulleys . . . LG 936
Green Machine, recoil starter springs . . . LG 937
Greenworks, bar & chain applications . . . FOR 36–37
Grinders, lawn mower blades . . . SFS 58–63
Grinders, saw chain . . . SFS 32–40
Grinding Wheel Dressing Tools, chain saw chain grinders . . . SFS 41
Grinding Wheel, chain sharpener . . . LG 687
Grommet, fuel tank fitting . . . LG 767
Groove Cleaning Tool, chain saw bar . . . SFS 14
Guard, belt . . . LG 802
GUIDE BARS . . . FOR 148–179
GUIDE BARS – Saw Mounts . . . FOR 171–177
Guide Bars for OPE . . . OPE 25
Guide Bars, Oregon® bar families . . . FOR 150–169
Guide Bars, part numbering system . . . FOR 152–153

2019 Alphabetical Index – EN

H

Hair Pins, assortment . . . SFS 100
Hair Pins, display pack . . . LG 800
Hand Cleaner, Fast Orange. . . . SFS 91
Hand Towellet, Wypall pre-moistened . . . SFS 68
Hand–Held Blower, Oregon® 40V MAX Cordless . . . OPE 18
Handle Bolts . . . SFS 105
Handle Knobs . . . LG 802
Handles, recoil starters . . . LG 929–930
Hearing Safety Earmuffs. . . . SFS 121
Heavy Duty Chain Saw Chain Breaker & Chain Saw Bar Nose Rivet Driver . . . SFS 45
Heavy Duty Chain Saw Chain Rivet Spinner . . . SFS 46
HEDGE TRIMMER BLADES . . . LG 783
Hedge Trimmer Kit with Battery Pack . . . OPE 21
Hedge Trimmer, HT250 Oregon® 40V MAX Cordless . . . OPE 21
Helmet, safety . . . SFS 112
Hemostat . . . SFS 65
High Temp Grease, 14oz. cartridge . . . SFS 92
Hitachi, bar & chain applications . . . FOR 37–38
Hitch Pins . . . LG 795
Hitch Pins, bent . . . LG 796
Hitch Pins, red head . . . LG 796
Hoffco Recoil Starter Springs . . . LG 937
Holder, marking crayon . . . SFS 19
Homelite, air filters . . . LG 191–192
Homelite, bar & chain applications . . . FOR 38–40
Homelite, carburetor kit . . . LG 605
Homelite, edger blades . . . LG 584
Homelite, fuel caps . . . LG 771
Homelite, recoil starter pulleys . . . LG 934
Homelite, recoil starter springs . . . LG 937
Homelite, sprocket applications. . . . FOR 189–190
Homelite, trimmer & blower parts . . . LG 1019
Honda, air filter cover assembly . . . LG 196
Honda, bearings . . . LG 235
Honda, belts. . . . LG 288
Honda, blades. . . . LG 457–458
Honda, carburetor float bowls. . . . LG 625
Honda, carburetor floats. . . . LG 624
Honda, carburetor inlet needle valves . . . LG 628–629
Honda, carburetor insulator . . . LG 601
Honda, carburetor kits . . . LG 605
Honda, carburetors. . . . LG 596–597
Honda, connecting rods . . . LG 755
Honda, control cables . . . LG 708–709
Honda, dipstick . . . LG 756
Honda, exhaust valves . . . LG 755
Honda, foam air filters . . . LG 195–196
Honda, fuel caps . . . LG 771
Honda, fuel tanks . . . LG 770
Honda, gasket sets . . . LG 751
Honda, gaskets . . . LG 751–753
Honda, ignition coils . . . LG 784–787
Honda, intake valves . . . LG 755
Honda, long heads . . . LG 755
Honda, muffler . . . LG 807–808
Honda, muffler pipe . . . LG 807–808
Honda, oil filler plug . . . LG 756
Honda, oil filters . . . LG 814–819
Honda, oil seals. . . . LG 756
Honda, oil sensor switches . . . LG 950
Honda, on/off switches . . . LG 949
Honda, paper air filters. . . . LG 192–194
Honda, piston . . . LG 754
Honda, piston rings. . . . LG 754
Honda, recoil starter pulleys . . . LG 934
Honda, recoil starter springs . . . LG 937
Honda, recoil starters . . . LG 922–923
Honda, rings. . . . LG 754
Honda, rods . . . LG 755
Honda, seals . . . LG 756
Honda, snow thrower paddles. . . . LG 846
Honda, snow thrower scraper bars . . . LG 847
Honda, snow thrower shear bolts. . . . LG 852–853
Honda, snow thrower skids . . . LG 850
Honda, starter center screw. . . . LG 929
Honda, starter cups . . . LG 929
Honda, starter handle . . . LG 930
Honda, starter motors . . . LG 918
Honda, starter pawls & springs . . . LG 930–931
Honda, stop switches . . . LG 949
Honda, wheels . . . LG 1029–1046
Hose & Grommet Fuel system Kits . . . LG 764–765
Hose Clamps . . . LG 765
Hose Clamps Assortment . . . SFS 104
Hour Meter . . . LG 741
HT250 Hedge Trimmer, cordless electric . . . OPE 21
HT600 Hedge Trimmer, Cordless Multi-Attachment . . . OPE 13
Huskee, blades . . . LG 458
Husqvarna, air filters. . . . LG 197–198
Husqvarna, bar & chain applications . . . FOR 40–47
Husqvarna, belts . . . LG 288–292
Husqvarna, blade adaptors . . . LG 340
Husqvarna, blades . . . LG 458–470
Husqvarna, drag links . . . LG 939
Husqvarna, edger blades . . . LG 585
Husqvarna, electric PTO clutches . . . LG 733–741
Husqvarna, ignition coils. . . . LG 784–787
Husqvarna, ignition switches . . . LG 942–945
Husqvarna, on/off switches . . . LG 949
Husqvarna, recoil starter pulleys . . . LG 934
Husqvarna, recoil starter springs . . . LG 937
Husqvarna, snow thrower shear bolts . . . LG 852–853
Husqvarna, spindles . . . LG 870–876
Husqvarna, sprocket applications . . . FOR 190–193
Husqvarna, steering bushing . . . LG 941
Husqvarna, steering links . . . LG 939
Husqvarna, steering sector gear . . . LG 941
Husqvarna, steering shaft . . . LG 940
Husqvarna, steering shaft support . . . LG 939
Husqvarna, steering wheel adapter. . . . LG 939
Husqvarna, stop switches . . . LG 949
Husqvarna, trimmer & blower parts . . . LG 1020
Husqvarna, wheels . . . LG 1029–1046
Hustler, bearings . . . LG 236
Hustler, belts . . . LG 279
Hustler, blades . . . LG 470–475
Hustler, control cables . . . LG 708
Hustler, electric PTO clutches . . . LG 733–741
Hustler, idler pulleys . . . LG 827
Hustler, spindles . . . LG 884
Hydraulic Oil Filters . . . LG 819
Hydraulic Oil, SP anti wear. . . . SFS 84
Hydrometer, battery . . . LG 744
Hydrostatic Wheel Motors . . . LG 696

I

Idler Pulleys. . . . LG 821–823
Idler Pulleys by Size, Chart . . . LG 821–823
Idler Pulleys, AMF . . . LG 824
Idler Pulleys, AYP. . . . LG 824–825
Idler Pulleys, Bobcat . . . LG 825–826
Idler Pulleys, Bunton . . . LG 826–827
Idler Pulleys, Cub Cadet . . . LG 826–827
Idler Pulleys, Dixie Chopper . . . LG 827
Idler Pulleys, Excel . . . LG 827
Idler Pulleys, Exmark . . . LG 827–828
Idler Pulleys, Grasshopper. . . . LG 828
Idler Pulleys, Hustler. . . . LG 827
Idler Pulleys, John Deere . . . LG 829–831
Idler Pulleys, MTD . . . LG 831–832
Idler Pulleys, Murray . . . LG 832–833
Idler Pulleys, OEM Replacement . . . LG 824–834
Idler Pulleys, Scag . . . LG 833
Idler Pulleys, Toro . . . LG 834
Idler Sprocket . . . LG 725
Ignition Coils . . . LG 784–787
Ignition Coils, Briggs & Stratton. . . . LG 784–787
Ignition Coils, Honda . . . LG 784–787
Ignition Coils, Husqvarna . . . LG 784–787
Ignition Coils, Kohler . . . LG 784–787
Ignition Coils, Lawn-Boy. . . . LG 784–787
Ignition Coils, Robin . . . LG 784–787
Ignition Coils, Stihl . . . LG 784–787
Ignition Coils, Tecumseh . . . LG 784–787
Ignition Keys . . . LG 945–946
Ignition Module, universal . . . LG 789
IGNITION PARTS . . . LG 784–790
Ignition Switches . . . LG 942–945

Ignition Switches, Ariens . . . LG 942–945
Ignition Switches, AYP . . . LG 942–945
Ignition Switches, Cub Cadet . . . LG 942–945
Ignition Switches, Husqvarna . . . LG 942–945
Ignition Switches, John Deere . . . LG 942–945
Ignition Switches, Kohler . . . LG 942–945
Ignition Switches, MTD . . . LG 942–945
Ignition Switches, Murray . . . LG 942–945
Ignition Switches, Snapper . . . LG 942–945
ILLUSTRATED PARTS LISTS . . . LG 40–175
In-Line Fuel Filters, Bobcat . . . LG 774–776
In-Line Fuel Filters, Briggs & Stratton . . . LG 774–776
In-Line Fuel Filters, John Deere . . . LG 774–776
In-Line Fuel Filters, Kawasaki . . . LG 774–776
In-Line Fuel Filters, Kohler . . . LG 774–776
In-Line Fuel Filters, Kubota . . . LG 774–776
In-Line Fuel Filters, Scag . . . LG 774–776
In-Line Fuel Filters, Snapper . . . LG 774–776
In-Line Fuel Filters, Tecumseh . . . LG 774–776
In-Line Fuel Filters, Toro . . . LG 774–776
In-Tank Fuel Filters . . . LG 776–779
In-Tank Fuel Filters, assortment . . . SFS 103
Industrial Polyester Cord Belts . . . LG 336–337
Ingersoll, blades . . . LG 475
Inlet Needle Valves . . . LG 628–629
Inner Tubes . . . LG 956–957
Insulator, battery terminal . . . LG 743
Insulator, Honda carburetor . . . LG 601
Intake Gaskets, 2-cycle engines . . . LG 621
Intake Valves, Honda . . . LG 755
Integrated Log Cradle . . . OPE 46
Interlock Switches . . . LG 947–948
Inventory Essentials . . . SFS 21

J

J-B Weld . . . SFS 97
Jacks . . . LG 796–798
Jacks, topwind . . . LG 796–798
Jacobsen, bearings . . . LG 226–237
Jacobsen, blades . . . LG 476–482
Jacobsen, edger blades . . . LG 585
Jacobsen, snow thrower scraper bars . . . LG 848
Jacobsen, snow thrower shear bolts . . . LG 852–853
John Deere, anti-scalp wheels/rollers . . . LG 1037–1042
John Deere, ball joints . . . LG 938–939
John Deere, bar & chain applications . . . FOR 47–49
John Deere, bearings . . . LG 237–238
John Deere, belts . . . LG 292–297
John Deere, blades . . . LG 482–493
John Deere, bushings . . . LG 237–238
John Deere, control cables . . . LG 709
John Deere, edger blades . . . LG 585
John Deere, electric PTO clutches . . . LG 733–741
John Deere, idler pulleys . . . LG 829–831
John Deere, ignition switches . . . LG 942–945
John Deere, in-line fuel filters . . . LG 774–776
John Deere, PTO switches . . . LG 946–947
John Deere, safety switches . . . LG 947–948
John Deere, semi-pneumatic flat-free wheel assemblies . . . LG 1044–1046
John Deere, snow thrower bearings . . . LG 854
John Deere, snow thrower bushings . . . LG 854
John Deere, snow thrower scraper bars . . . LG 847–848
John Deere, snow thrower shear bolts . . . LG 852–853
John Deere, snow thrower skids . . . LG 850
John Deere, spindles . . . LG 891–893
John Deere, sprocket applications . . . FOR 194
John Deere, voltage regulators . . . LG 731–732
John Deere, wheels . . . LG 1029–1046
Jonsered, bar & chain applications . . . FOR 50–55
Jonsered, recoil starter springs . . . LG 937
Jonsered, sprocket applications . . . FOR 194–195

K

K&S Bearings . . . LG 238
K&S Bushings . . . LG 238
Kawasaki, air filters, foam . . . LG 201–203
Kawasaki, air filters, paper . . . LG 198–201
Kawasaki, edger blades . . . LG 585
Kawasaki, fuel caps . . . LG 772
Kawasaki, in-line fuel filters . . . LG 774–776
Kawasaki, oil filters . . . LG 814–819
Kawasaki, primer bulbs . . . LG 630
Kawasaki, recoil starter pulleys . . . LG 935
Kawasaki, recoil starter springs . . . LG 937
Kawasaki, recoil starters . . . LG 924
Kawasaki, starter motors . . . LG 917–918
Kawasaki, voltage regulators . . . LG 732
Kees, belts . . . LG 297
Kees, blades . . . LG 494–497
KEPS Nuts . . . SFS 105
Keys, flywheel . . . LG 790
Keys, ignition . . . LG 945–946
Keys, starter . . . LG 945–946
Kinetic, log splitter . . . OPE 44–45
King Kutter, belts . . . LG 298
King Kutter, blades . . . LG 497
King Kutter, semi-pneumatic flat-free wheel assemblies . . . LG 1044–1046
Kits, carburetor rebuild . . . LG 602–621
Knob, shift . . . LG 805
Knobs, handle . . . LG 802
Kobalt, bar & chain applications . . . FOR 55
Kohler, carburetor kits . . . LG 605
Kohler, electric starter gears . . . LG 928
Kohler, foam air filters . . . LG 206–207
Kohler, gasket . . . LG 757
Kohler, gasket set . . . LG 757
Kohler, ignition coils . . . LG 784–787
Kohler, ignition switches . . . LG 942–945
Kohler, in-line fuel filters . . . LG 774–776
Kohler, muffler . . . LG 808–809
Kohler, oil filters . . . LG 814–819
Kohler, paper air filters . . . LG 203–206
Kohler, points & condenser . . . LG 789
Kohler, recoil starter springs . . . LG 937
Kohler, starter motors . . . LG 918–919
Kohler, voltage regulators . . . LG 732
Komatsu, recoil starters . . . LG 924
Kubota, air filters . . . LG 208
Kubota, anti-scalp wheels/rollers . . . LG 1037–1042
Kubota, belts . . . LG 298–299
Kubota, blades . . . LG 497–501
Kubota, in-line fuel filters . . . LG 774–776
Kubota, PTO switches . . . LG 946–947
Kubota, safety switches . . . LG 947–948

L

Land Pride, blades . . . LG 501–503
Lastec, blades . . . LG 503–504
Lawn Chief, spindles . . . LG 869
Lawn Mower, blade balancer . . . SFS 63
Lawn Mower, blade boxes . . . SFS 21
Lawn Mower, blade grinder accessories . . . SFS 62
Lawn Mower, blade grinder replacement parts . . . SFS 62
Lawn Mower, blade grinders . . . SFS 58–63
Lawn Mower, blade sharpeners . . . SFS 58–63
Lawn Mower, deck leveling tool . . . SFS 63
Lawn Mower, ramps . . . SFS 64
Lawn Mower, seats . . . LG 842–844
Lawn Mower, sulkies . . . SFS 77–78
Lawn-Boy, air filters . . . LG 209
Lawn-Boy, bearings . . . LG 238–239
Lawn-Boy, belts . . . LG 299
Lawn-Boy, blades . . . LG 505
Lawn-Boy, carburetor inlet needle valves . . . LG 629
Lawn-Boy, carburetor kits . . . LG 606
Lawn-Boy, edger blades . . . LG 585
Lawn-Boy, ignition coils . . . LG 784–787
Lawn-Boy, wheels . . . LG 1029–1046
Lead Battery Terminal . . . LG 743
Leather Boots, premium . . . SFS 113
Lesco, belts . . . LG 299
Lesco, blades . . . LG 505–508
Lesco, edger blades . . . LG 585
Lever, felling . . . SFS 18
Lift Arms . . . LG 794
Lifting Picks, logs . . . SFS 18
Lifting Tongs, logs . . . SFS 18

2019 Alphabetical Index – EN

Linch Pins . . . . . LG 803
Linch Pins Assortment . . . . . SFS 104
Line, fuel . . . . . LG 761–763
LINKAGE, JACKS, & HARDWARE . . . . . LG 792–801
Lithium Ion Battery Packs . . . . . OPE 10
Little Wonder, bearings . . . . . LG 239
Little Wonder, belts . . . . . LG 300
Little Wonder, edger blades . . . . . LG 585
LM300 Oregon® 40V MAX, lawn mower, Cordless Tool System . . . . . OPE 16
LM400 Oregon® 40V MAX, lawn mower, Cordless Tool System . . . . . OPE 17
Lock Straps, mower hoods . . . . . LG 803
Locking Pins . . . . . LG 795
Locking Pins, display pack . . . . . LG 800
Log Cradle . . . . . OPE 46
Log Lifting Picks . . . . . SFS 18
Log Lifting Tongs . . . . . SFS 18
Log Splitter Catcher . . . . . OPE 46
Log Splitter, 22-Ton . . . . . OPE 39
Log Splitter, 28-Ton . . . . . OPE 40
Log Splitter, 28-Ton Extend Split™ . . . . . OPE 41
Log Splitter, 35-Ton . . . . . OPE 42
Log Splitter, Kinetic . . . . . OPE 44–45
LOG SPLITTERS . . . . . OPE 38–47
Log Splitters, 4-way wedge . . . . . OPE 47
Loggers Filing Vise . . . . . SFS 14
Long Heads, Honda . . . . . LG 755
Lube, tire bead . . . . . SFS 68
Lubricant, gear, "0" . . . . . SFS 92
Lubricant, gear, "00" . . . . . SFS 92
Lubricant, gear, 80-90 wt . . . . . SFS 92
Lubricant, penetrant . . . . . SFS 93
Lubricants, Grease, Cleaners, Solvents & Glues . . . . . SFS 92–98
Lynch Pins . . . . . LG 794

M

Machinery Bushings . . . . . SFS 106
Machinery Keys, display pack . . . . . LG 801
Magneto Coils . . . . . LG 784–787
Makita, bar & chain applications . . . . . FOR 56–59
Makita, sprocket applications . . . . . FOR 196
Manco Belts . . . . . LG 300
Marking Crayon Holder . . . . . SFS 19
Marking Crayons . . . . . SFS 19
Maruyama, air filters . . . . . LG 209
Maruyama, bar & chain applications . . . . . FOR 59
Maruyama, edger blades . . . . . LG 586
Maruyama, fuel caps . . . . . LG 772
Maruyama, trimmer & blower parts . . . . . LG 1020–1021
Masks, disposable respirator . . . . . SFS 120
Massey Fergunson, belts . . . . . LG 300
Massey Fergunson, blades . . . . . LG 508–511
Mastercraft, sprocket applications . . . . . FOR 196
McClane, belts . . . . . LG 300
McClane, control cables . . . . . LG 709
McCulloch, air filters . . . . . LG 209
McCulloch, edger blades . . . . . LG 586
McCulloch, sprocket applications . . . . . FOR 196–197
McCulloch, trimmer & blower parts . . . . . LG 1021
McCulloch,, bar & chain applications . . . . . FOR 60–62
McLane, bearings . . . . . LG 239
McLane, edger blades . . . . . LG 586
Melter, snow & ice . . . . . SFS 97
Meter, hour . . . . . LG 741
Metric Hex Cap Screws & Nuts Assortment . . . . . SFS 101
Mid-Mount Pole Saw . . . . . OPE 20
Mini Bike Throttle Accessories . . . . . LG 722
MISCELLANEOUS PARTS . . . . . LG 802–805
Mitsubishi Recoil Starter Pulleys . . . . . LG 935
Mitsubishi Recoil Starters . . . . . LG 924
Mitsubishi, air filters . . . . . LG 210
Mitten Grip Snow Thrower Starter Handle . . . . . LG 851
Modular Displays . . . . . SFS 4–6
Montgomery Ward, sprocket applications . . . . . FOR 197
Mower Deck Suspension Parts . . . . . LG 804
Mower Hood Lock Straps . . . . . LG 803
MTD, air filters . . . . . LG 210
MTD, anti-scalp wheels/rollers . . . . . LG 1037–1042
MTD, axles . . . . . LG 938
MTD, ball joints . . . . . LG 938–939
MTD, bearings . . . . . LG 239–242
MTD, belt guard . . . . . LG 802
MTD, belts . . . . . LG 300–306
MTD, blade adaptors . . . . . LG 340–341
MTD, blade brake . . . . . LG 802
MTD, blades . . . . . LG 512–521
MTD, bushings . . . . . LG 239–242
MTD, carburetor kits . . . . . LG 606
MTD, control cables . . . . . LG 710–715
MTD, drive discs . . . . . LG 726
MTD, drive pulleys . . . . . LG 837–838
MTD, edger blades . . . . . LG 586
MTD, electric PTO clutches . . . . . LG 733–741
MTD, fuel caps . . . . . LG 772
MTD, idler pulleys . . . . . LG 831–832
MTD, ignition switches . . . . . LG 942–945
MTD, mower hood lock straps . . . . . LG 803
MTD, primer bulbs . . . . . LG 630
MTD, PTO switches . . . . . LG 946–947
MTD, recoil starter pulleys . . . . . LG 935
MTD, recoil starters . . . . . LG 925
MTD, safety switches . . . . . LG 947–948
MTD, snow thrower 120V starters . . . . . LG 861
MTD, snow thrower auger assembly . . . . . LG 846
MTD, snow thrower bearings . . . . . LG 854–855
MTD, snow thrower bronze worm gear . . . . . LG 856
MTD, snow thrower bushings . . . . . LG 854–855
MTD, snow thrower carburetor kits . . . . . LG 859
MTD, snow thrower chute flange keeper . . . . . LG 855
MTD, snow thrower chute tilt cable guide . . . . . LG 856
MTD, snow thrower clutch lock cam . . . . . LG 856
MTD, snow thrower control cables . . . . . LG 856–859
MTD, snow thrower ignition key . . . . . LG 861
MTD, snow thrower lock plate . . . . . LG 856
MTD, snow thrower paddles . . . . . LG 846
MTD, snow thrower primer . . . . . LG 860
MTD, snow thrower recoil starters . . . . . LG 860–861
MTD, snow thrower shave plates . . . . . LG 848–849
MTD, snow thrower shear bolts . . . . . LG 852–853
MTD, snow thrower skids . . . . . LG 850
MTD, snow thrower steering control trigger . . . . . LG 856
MTD, snow thrower wheel . . . . . LG 856
MTD, spindles . . . . . LG 893–901
MTD, starter motors . . . . . LG 921
MTD, starter solenoids . . . . . LG 730
MTD, steering arm . . . . . LG 939
MTD, steering pinion gear . . . . . LG 941
MTD, steering shaft . . . . . LG 940
MTD, trimmer & blower parts . . . . . LG 1021–1022
MTD, wheels . . . . . LG 1029–1046
Muffler, Briggs & Stratton . . . . . LG 806–807
Muffler, Cub Cadet . . . . . LG 807
Muffler, Gravely . . . . . LG 807
Muffler, Honda . . . . . LG 807–808
Muffler, Kohler . . . . . LG 808–809
Muffler, Murray . . . . . LG 809
Muffler, Snapper . . . . . LG 809
Muffler, Tecumseh . . . . . LG 809–810
Muffler, Toro . . . . . LG 810
Muffler, Wheel Horse . . . . . LG 810
Muffler, Wisconsin . . . . . LG 810
MUFFLERS . . . . . LG 806–810
Murray, anti-scalp wheels/rollers . . . . . LG 1037–1042
Murray, ball joints . . . . . LG 938–939
Murray, bearings . . . . . LG 242–243
Murray, belts . . . . . LG 306–309
Murray, blade adaptors . . . . . LG 342
Murray, blades . . . . . LG 522–528
Murray, bushings . . . . . LG 242–243
Murray, control cables . . . . . LG 715–717
Murray, drag links . . . . . LG 939
Murray, drive pulleys . . . . . LG 838–839
Murray, idler pulleys . . . . . LG 832–833
Murray, ignition switches . . . . . LG 942–945
Murray, muffler . . . . . LG 809
Murray, snow thrower shear bolts . . . . . LG 852–853
Murray, snow thrower skids . . . . . LG 850
Murray, spindles . . . . . LG 902
Murray, steering gear kit . . . . . LG 941
Murray, steering links . . . . . LG 939
Murray, wheels . . . . . LG 1029–1046

N

Needle Valves . . . LG 628–629
Neoprene Boot Liner . . . SFS 113
Nikki Carburetor Kits . . . LG 606
Noma, bearings . . . LG 243
Noma, belts . . . LG 309–310
Noma, bushings . . . LG 243
Noma, snow thrower shear bolts . . . LG 852–853
Noma, spindles . . . LG 869
Noma, wheels . . . LG 1029–1046
Nuts, chain saw bars . . . LG 686
Nuts, KEPS . . . SFS 105
Nuts, pal . . . SFS 105
Nuts, spindle . . . SFS 105
Nuts, spindles . . . LG 910

O

O-Rings, assortment . . . SFS 102
OEM Replacement Drive Pulleys . . . LG 834–840
OEM Replacement Idler Pulleys . . . LG 824–834
Oil Caps, chain saws . . . LG 690
Oil Drain Pan . . . SFS 67
Oil Drain Valve . . . LG 760
Oil Extractor . . . SFS 67
Oil Filler Plug, Briggs & Stratton . . . LG 750
Oil Filler Plug, Honda . . . LG 756
OIL FILTERS . . . LG 814–819
Oil Filters, Briggs & Stratton . . . LG 814–819
Oil Filters, Generac . . . LG 814–819
Oil Filters, Honda . . . LG 814–819
Oil Filters, Kawasaki . . . LG 814–819
Oil Filters, Kohler . . . LG 814–819
Oil Filters, Tecumseh . . . LG 814–819
Oil Seal, Tecumseh . . . LG 759
Oil Seal, Troy-Bilt . . . LG 954
Oil Seals, Briggs & Stratton . . . LG 749
Oil Seals, Honda . . . LG 756
Oil Sensor Switches, Honda . . . LG 950
Oil, 2-cycle . . . SFS 82
Oil, air tool . . . SFS 83
Oil, chain saw bar & chain . . . SFS 19
Oil, Dri absorbant . . . SFS 68
Oil, hydraulic, SP anti-wear . . . SFS 84
Oil, Only One™ 2-cycle engine . . . SFS 19
Oil, synthetic 2-cycle, VP fuels . . . SFS 83
Oily Waste Safety Cans, polyethylene . . . SFS 88
Oleo-Mac, air filters . . . LG 210
Olympyk (Oleo-Mac), bar & chain applications . . . FOR 62–64
Olympyk (Oleo-Mac), sprocket applications . . . FOR 197
Onan, air filters . . . LG 211
Onan, starter motors . . . LG 921
Onan, voltage regulators . . . LG 732
Only One™ 2-Cycle Engine Oil . . . SFS 19
OPE, accessories . . . OPE 23
OPE, PowerSharp® chain . . . OPE 25
OPE, replacement parts . . . OPE 25
Oregon Log Splitters . . . OPE 38–47
Oregon, sprocket applications . . . FOR 197
Oregon® Bead Seater Tire Inflator . . . SFS 70
Oregon® Carburetor Floats . . . LG 624–625
Oregon® Carburetor Inlet Needle Valves . . . LG 629
Oregon® Carburetor Kits . . . LG 606–608
Oregon® Catalog . . . SFS 23
Oregon® Chain Saw Chain Cutter Displays . . . SFS 23
Oregon® Cordless Tool System, bar & chain applications . . . FOR 64
Oregon® Flat Files, chain saw chain . . . SFS 8
Oregon® Fuel Line . . . LG 761
Oregon® Magnum Ball Bearings . . . LG 224
Oregon® Round Files, chain saw chain . . . SFS 7–8
Oregon® Saw Chain Classification Chart . . . FOR 3
Oregon® Tire Changer . . . SFS 69
Oregon®, selecting products . . . FOR 4

P

Paddles, snow throwers . . . LG 846–847
Pal Nuts . . . SFS 105
Pallets, spill . . . SFS 89
Partner, air filters . . . LG 211
Partner, bar & chain applications . . . FOR 65–66
Partner, belts . . . LG 310
Partner, sprocket applications . . . FOR 197–198
Parts Bin Boxes . . . SFS 21
Parts for Discontinued Grinners, Spinners, & Breakers . . . SFS 48–57
Penetrant, lubricant . . . SFS 93
Permatex Sealant . . . SFS 96
Permatex Thread locker . . . SFS 96
PH600 Power Head, Cordless Multi-Attachement . . . OPE 12
Pioneer, bar & chain applications . . . FOR 67–68
Pioneer, sprocket applications . . . FOR 198
Pipe, Honda muffler . . . LG 807–808
Piston Ring Compressor . . . SFS 66
Piston Rings, Briggs & Stratton . . . LG 750
Piston Rings, Honda . . . LG 754
Piston, Honda . . . LG 754
Plastic Cable Zip Ties . . . LG 723
Plastic Wire Bundlers . . . LG 723
Platforms, spill . . . SFS 89
Platinum Gatorline Trimmer Line . . . OPE 27
Pneumatic Wheel Assemblies . . . LG 1044–1046
Pocket Chain Saw Chain Breaker . . . SFS 47
Point of Purchase Display, 120v Professional Series™ . . . OPE 37
Point of Purchase Displays, Cordless Tool System . . . OPE 27–29
Point of Purchase Support Material . . . SFS 4–6, 21–23
Points & Condenser, Briggs & Stratton . . . LG 789
Points & Condenser, Kohler . . . LG 789
Points & Condenser, Tecumseh . . . LG 789
Polaris ATV Belts . . . LG 310
Pole Saw Kit with Battery Pack . . . OPE 20
Pole Saw Saw Chain . . . OPE 20
Pole Saw, PS250 Oregon® 40V MAX Cordless . . . OPE 20
Poly Ramp . . . SFS 89
Portable Light, WL275 Oregon® 40V MAX Cordless . . . OPE 22
Poulan / Poulan Pro, bar & chain applications . . . FOR 68–73
Poulan / Poulan Pro, sprocket applications . . . FOR 198–200
Poulan, air filters . . . LG 211–212
Poulan, blades . . . LG 529–533
Poulan, primer bulbs . . . LG 630
Poulan, pro belts . . . LG 311
Power Pruner / Echo Power Pruner, bar & chain applications . . . FOR 73–74
Power Spout, VP fuels . . . SFS 81
Power Trim, belts . . . LG 311
Power Trim, drive pulleys . . . LG 839
Power Trim, edger blades . . . LG 586
Powerhorse, bar & chain applications . . . FOR 74
PowerSharp® – Saw Chain Sharpening System . . . FOR 136–137
PowerSharp® Saw Chain for OPE . . . OPE 25
Premium Aramid Cord Belts . . . LG 334–335
Premium Leather Boots . . . SFS 113
Pressure Washer Pump Saver, non-aerosal . . . SFS 98
Primary Wire . . . LG 742
Primer Bulbs . . . LG 629–632
Primer Bulbs, chain saws . . . LG 690
Primers . . . LG 629–632
Professional Bar Mount Filing Guide, chain saw chain . . . SFS 11
Professional Maintenance Kit, chain saw chain . . . SFS 10
PS250 Guide Bar . . . OPE 25
PS250 Pole Saw . . . OPE 20
PS600 Pole Saw, Cordless Multi-Attachement . . . OPE 12
PTO Cables . . . LG 701–720
PTO Clutch . . . LG 733–741
PTO Switches . . . LG 946–947
Puller, flywheel . . . SFS 65
Puller, gear . . . SFS 65
PULLEYS . . . LG 821–841
Pulleys, drive . . . LG 834–840
Pulleys, idler . . . LG 824–834
Pulleys, recoil starters . . . LG 932–935
Pump Saver, pressure washer, non-aerosal . . . SFS 98
Pump, fuel . . . LG 767
Punch Set, roll pin . . . SFS 67
Push-Pull Control Cables . . . LG 720–721

2019 Alphabetical Index – EN

Q

Quick Load Trimmer Head . . . . . OPE 26
Quill Shafts . . . . . LG 906–910
Quills, blade . . . . . LG 869–910

R

R-Clip Pins . . . . . LG 795
Racks, commercial equipment . . . . . SFS 74–76
Rain Apparel . . . . . SFS 115
Rain Jacket . . . . . SFS 115
Rain Shell . . . . . SFS 115
Ramp, poly . . . . . SFS 89
Ramps, lawn mowers . . . . . SFS 64
Ransomes, semi-pneumatic flat-free wheel assemblies . . . . . LG 1044–1046
Rapid Battery Charger . . . . . OPE 10
Recoil Starter Handles . . . . . LG 929–930
Recoil Starter Parts . . . . . LG 929–930
Recoil Starter Pulleys . . . . . LG 932–935
Recoil Starter Pulleys, Briggs & Stratton . . . . . LG 933
Recoil Starter Pulleys, Echo . . . . . LG 933
Recoil Starter Pulleys, Green Machine . . . . . LG 936
Recoil Starter Pulleys, Homelite . . . . . LG 934
Recoil Starter Pulleys, Honda . . . . . LG 934
Recoil Starter Pulleys, Husqvarna . . . . . LG 934
Recoil Starter Pulleys, Kawasaki . . . . . LG 935
Recoil Starter Pulleys, Mitsubishi . . . . . LG 935
Recoil Starter Pulleys, MTD . . . . . LG 935
Recoil Starter Pulleys, Ryan . . . . . LG 934–935
Recoil Starter Pulleys, Snapper . . . . . LG 936
Recoil Starter Pulleys, Stihl . . . . . LG 936
Recoil Starter Pulleys, Tecumseh . . . . . LG 936
Recoil Starter Rope . . . . . LG 937
Recoil Starter Springs . . . . . LG 937
Recoil Starter Springs, Briggs & Stratton . . . . . LG 937
Recoil Starter Springs, Dolmar . . . . . LG 937
Recoil Starter Springs, Echo . . . . . LG 937
Recoil Starter Springs, Green Machine . . . . . LG 937
Recoil Starter Springs, Hoffco . . . . . LG 937
Recoil Starter Springs, Homelite . . . . . LG 937
Recoil Starter Springs, Honda . . . . . LG 937
Recoil Starter Springs, Husqvarna . . . . . LG 937
Recoil Starter Springs, Jonsered . . . . . LG 937
Recoil Starter Springs, Kawasaki . . . . . LG 937
Recoil Starter Springs, Kohler . . . . . LG 937
Recoil Starter Springs, RedMax . . . . . LG 937
Recoil Starter Springs, Robin . . . . . LG 937
Recoil Starter Springs, Shindaiwa . . . . . LG 937
Recoil Starter Springs, Stihl . . . . . LG 937
Recoil Starters . . . . . LG 922–925
Recoil Starters, Briggs & Stratton . . . . . LG 923
Recoil Starters, Honda . . . . . LG 922–923
Recoil Starters, Kawasaki . . . . . LG 924
Recoil Starters, Komatsu . . . . . LG 924
Recoil Starters, Mitsubishi . . . . . LG 924
Recoil Starters, MTD . . . . . LG 925
Recoil Starters, Robin . . . . . LG 925
Recoil Starters, Tecumseh . . . . . LG 922–925
Red Hawk, blades . . . . . LG 534–535
RedMax, air filters . . . . . LG 212
RedMax, bar & chain applications . . . . . FOR 74–76
RedMax, edger blades . . . . . LG 587
RedMax, recoil starter springs . . . . . LG 937
RedMax, sprocket applications . . . . . FOR 200
RedMax, trimmer & blower parts . . . . . LG 1022
Refacer, valves . . . . . SFS 67
Regulators, voltage . . . . . LG 731–732
Relay Switches . . . . . LG 729
Remington, bar & chain applications . . . . . FOR 77–78
Remington, sprocket applications . . . . . FOR 200
Repair Kits, tubeless tires . . . . . SFS 69
Replacement Battery Packs . . . . . OPE 10
Replacement File, chain saw bar & rail dresser tool . . . . . SFS 13
Replacement Guide Bars for OPE . . . . . OPE 25
Replacement Parts for Discontinued Grinners, & Breakers . . . . . SFS 48–57
Replacement Parts, lawn mower blade grinders . . . . . SFS 62
Replacement PowerSharp® Chain for OPE . . . . . OPE 25
Replacement Trimmer Head ST275 . . . . . OPE 26
Respirator Masks, disposable . . . . . SFS 120
Riding Mower Cover . . . . . LG 803
Ring Compressor . . . . . SFS 66
Rings, Briggs & Stratton . . . . . LG 750
Rings, Honda . . . . . LG 754
Rivet Spinner, chain saw chain, heavy duty . . . . . SFS 46
Rivet Spinner, compact electric . . . . . SFS 42
Robin, carburetors . . . . . LG 596
Robin, ignition coils . . . . . LG 784–787
Robin, recoil starter springs . . . . . LG 937
Robin, recoil starters . . . . . LG 925
Rod End Bearings . . . . . LG 804
Rods, Briggs & Stratton . . . . . LG 750
Rods, Honda . . . . . LG 755
Roll Pin Punch Set . . . . . SFS 68
Roll Pins Assortment . . . . . SFS 102
Roller Chain . . . . . LG 676
Roller Chain, connecting links . . . . . LG 676
Roller Chain, half links . . . . . LG 676
Roller Chain, offset links . . . . . LG 676
Rope, starter . . . . . LG 937
Roper, bearings . . . . . LG 227–228
Roper, belts . . . . . LG 311–312
Roper, bushings . . . . . LG 227–228
Roper, spindles . . . . . LG 903–904
Rubber Forestry Boots . . . . . SFS 113
Ryan, recoil starter pulleys . . . . . LG 934–935
Ryan, trimmer & blower parts . . . . . LG 1022–1023
Ryobi, bar & chain applications . . . . . FOR 78–79
Ryobi, edger blades . . . . . LG 587
Ryobi, trimmer & blower parts . . . . . LG 1022–1023

S

Safety Cans, oily waste, polyethylene . . . . . SFS 88
SAFETY EQUIPMENT . . . . . SFS 108–121
Safety Eyewear . . . . . SFS 117–119
Safety Eyewear, display rack . . . . . SFS 20
Safety Glasses . . . . . SFS 117–119
Safety Goggles . . . . . SFS 117–119
Safety Helmet . . . . . SFS 112
Safety Switches . . . . . LG 947–948
Safety Visor . . . . . SFS 120
Safety, ANSI information chain saw . . . . . FOR 2–3
SAW CHAIN . . . . . FOR 103–147
Saw Chain for PS250 Cordless Pole Saw . . . . . OPE 25
Saw Chain, automatic chain grinders . . . . . SFS 32–40
Saw Chain, features . . . . . FOR 108–109
Scag, anti-scalp wheels/rollers . . . . . LG 1037–1042
Scag, ball joints . . . . . LG 938–939
Scag, bearings . . . . . LG 244
Scag, belts . . . . . LG 312–314
Scag, blades . . . . . LG 535–537
Scag, brake band . . . . . LG 698
Scag, bushings . . . . . LG 244
Scag, control cables . . . . . LG 717–718
Scag, drive pulleys . . . . . LG 839–840
Scag, fuel caps . . . . . LG 772
Scag, fuel tank strap . . . . . LG 698
Scag, idler pulleys . . . . . LG 833
Scag, in-line fuel filters . . . . . LG 774–776
Scag, pneumatic wheel assemblies . . . . . LG 1044–1046
Scag, PTO switches . . . . . LG 946–947
Scag, safety switches . . . . . LG 947–948
Scag, semi-pneumatic flat-free wheel assemblies . . . . . LG 1044–1046
Scag, spindles . . . . . LG 903
Scale, chain saw chain . . . . . SFS 47
Scalping Blades . . . . . LG 368
Scotts, belts . . . . . LG 315
Scotts, blades . . . . . LG 537–539
Scraper Bars, snow throwers . . . . . LG 847–849
Scraper, gasket . . . . . LG 760
Screnches . . . . . SFS 19
Sea Foam Engine Treatment . . . . . SFS 81
Seal, Troy-Bilt . . . . . LG 954
Sealant, Permatex . . . . . SFS 95
Seals, Briggs & Stratton . . . . . LG 749
Seals, Honda . . . . . LG 756
Seals, Spindles . . . . . LG 910
Sears / Craftsman, bar & chain applications . . . . . FOR 23–25

Sears / Craftsman, bearings . . . LG 227–228
Sears / Craftsman, belts . . . LG 315
Sears / Craftsman, blade adaptors . . . LG 342
Sears / Craftsman, bushings . . . LG 227–228
Sears / Craftsman, edger blades . . . LG 587
Sears / Craftsman, spindles . . . LG 903–904
Sears / Craftsman, sprocket applications . . . FOR 200
Sears / Craftsman, wheels . . . LG 1029–1046
SEATS . . . LG 842–844
Sediment bowl . . . LG 765
Self Propelled Control Cables . . . LG 701–720
Self-Tapping Bolts . . . SFS 105
Semi-Pneumatic Flat-Free Wheel Assemblies . . . LG 1044–1046
Semi-Pneumatic Wheels, AMF . . . LG 1029–1037
Semi-Pneumatic Wheels, AYP . . . LG 1029–1037
Semi-Pneumatic Wheels, Bobcat . . . LG 1029–1037
Semi-Pneumatic Wheels, Bunton . . . LG 1029–1037
Semi-Pneumatic Wheels, Honda . . . LG 1029–1037
Semi-Pneumatic Wheels, Husqvarna . . . LG 1029–1037
Semi-Pneumatic Wheels, John Deere . . . LG 1029–1037
Semi-Pneumatic Wheels, Lawn-Boy . . . LG 1029–1037
Semi-Pneumatic Wheels, MTD . . . LG 1029–1037
Semi-Pneumatic Wheels, Murray . . . LG 1029–1037
Semi-Pneumatic Wheels, Noma . . . LG 1029–1037
Semi-Pneumatic Wheels, Sears . . . LG 1029–1037
Semi-Pneumatic Wheels, Sensation . . . LG 1029–1037
Semi-Pneumatic Wheels, Snapper . . . LG 1029–1037
Semi-Pneumatic Wheels, Toro . . . LG 1029–1037
Sensation Wheels . . . LG 1029–1046
Service Tickets . . . SFS 21
Shaft Collars, display pack . . . LG 801
Shaft, steering . . . LG 940
Shafts, quills . . . LG 906–910
Shafts, spindles . . . LG 906–910
Sharpeners, lawn mower blades . . . SFS 58–63
Sharpening Stones, hand held chain saw chain sharpeners . . . SFS 12
Shave Plates, snow throwers . . . LG 847–849
Shear Bolts, snow throwers . . . LG 852–853
Shear Pins, flywheel . . . LG 790
Shift Knob . . . LG 805
Shindaiwa, air filters . . . LG 212–213
Shindaiwa, bar & chain applications . . . FOR 79–83
Shindaiwa, edger blades . . . LG 587
Shindaiwa, fuel caps . . . LG 772
Shindaiwa, recoil starter springs . . . LG 937
Shindaiwa, trimmer & blower parts . . . LG 1023–1024
Shop Packs, air filters . . . LG 178
SHOP RETAIL . . . SFS 4–23
SHOP TOOLS . . . SFS 24–71
Shorting Clip, spark plug . . . LG 867
Shoulder Bolts . . . SFS 104–105
Shoulder Bolts, assortment . . . SFS 104–105
Shut-Off Valves, fuel line . . . LG 766–767
Shut-Offs, fuel line . . . LG 766–767
Simplicity, bearings . . . LG 244–245
Simplicity, belts . . . LG 316
Simplicity, blades . . . LG 539–545
Simplicity, bushings . . . LG 244–245
Simplicity, electric PTO clutches . . . LG 733–741
Simplicity, snow thrower scraper bars . . . LG 849
Single Use Grease Gun . . . SFS 12–13
Siphon Pump, VP fuels . . . SFS 81
Skids, snow throwers . . . LG 849–851
Skil, bar & chain applications . . . FOR 83
Skil, sprocket applications . . . FOR 201
Slime® Tire Sealant . . . SFS 98
Snap Rings, assortment . . . SFS 103
Snapper, ball joints . . . LG 938–939
Snapper, bar & chain applications . . . FOR 84
Snapper, bearings . . . LG 245–246
Snapper, belts . . . LG 316–319
Snapper, blade adaptors . . . LG 342
Snapper, blades . . . LG 545–556
Snapper, brake band . . . LG 698
Snapper, bushings . . . LG 245–246
Snapper, control cables . . . LG 718–719
Snapper, drive discs . . . LG 727
Snapper, drive pulleys . . . LG 840
Snapper, electric PTO clutches . . . LG 733–741
Snapper, ignition switches . . . LG 942–945
Snapper, in-line fuel filters . . . LG 774–776
Snapper, muffler . . . LG 809
Snapper, on/off switches . . . LG 950
Snapper, pneumatic wheel assemblies . . . LG 1044–1046
Snapper, PTO switches . . . LG 946–947
Snapper, recoil starter pulleys . . . LG 936
Snapper, safety switches . . . LG 947–948
Snapper, seal boot . . . LG 805
Snapper, snow thrower paddles . . . LG 849
Snapper, snow thrower scraper bars . . . LG 849
Snapper, snow thrower shear bolts . . . LG 852–853
Snapper, snow thrower skids . . . LG 850
Snapper, sprocket applications . . . FOR 201
Snapper, stop switches . . . LG 949
Snapper, trimmer & blower parts . . . LG 1024
Snapper, wheels . . . LG 1029–1046
Snow & Ice Melter . . . SFS 97
SNOW THROWER PARTS . . . LG 846–863
Snow Thrower, 120V starters, Cub Cadet . . . LG 861
Snow Thrower, 120V starters, MTD . . . LG 861
Snow Thrower, 120V starters, Tecumseh . . . LG 861
Snow Thrower, auger assembly, MTD . . . LG 846
Snow Thrower, auger control cables . . . LG 701–720
Snow Thrower, bearings . . . LG 853–855
Snow Thrower, bearings, Ariens . . . LG 853–854
Snow Thrower, bearings, Cub Cadet . . . LG 854–855
Snow Thrower, bearings, John Deere . . . LG 854
Snow Thrower, bearings, MTD . . . LG 854–855
Snow Thrower, belts . . . LG 862–863
Snow Thrower, bronze worm gear, Cub Cadet . . . LG 856
Snow Thrower, bronze worm gear, MTD . . . LG 856
Snow Thrower, bushings, Ariens . . . LG 853–854
Snow Thrower, bushings, Cub Cadet . . . LG 854–855
Snow Thrower, bushings, John Deere . . . LG 854
Snow Thrower, bushings, MTD . . . LG 854–855
Snow Thrower, carburetor kits, Cub Cadet . . . LG 859
Snow Thrower, carburetor kits, MTD . . . LG 859
Snow Thrower, chute control cables . . . LG 701–720
Snow Thrower, chute flange keeper, Cub Cadet . . . LG 855
Snow Thrower, chute flange keeper, MTD . . . LG 855
Snow Thrower, chute tilt cable guide, Cub Cadet . . . LG 856
Snow Thrower, chute tilt cable guide, MTD . . . LG 856
Snow Thrower, clutch lock cam, Cub Cadet . . . LG 856
Snow Thrower, clutch lock cam, MTD . . . LG 856
Snow Thrower, control cables, Cub Cadet . . . LG 856–859
Snow Thrower, control cables, MTD . . . LG 856–859
Snow Thrower, drive disc . . . LG 851
Snow Thrower, ignition key, Cub Cadet . . . LG 861
Snow Thrower, ignition key, Tecumseh . . . LG 861
Snow Thrower, lock plate, Cub Cadet . . . LG 856
Snow Thrower, lock plate, MTD . . . LG 856
Snow Thrower, paddles . . . LG 846–847
Snow Thrower, paddles, Honda . . . LG 846
Snow Thrower, paddles, MTD . . . LG 846
Snow Thrower, paddles, Snapper . . . LG 847
Snow Thrower, paddles, Toro . . . LG 847
Snow Thrower, primer, Cub Cadet . . . LG 860
Snow Thrower, primer, MTD . . . LG 860
Snow Thrower, recoil starters, Cub Cadet . . . LG 860–861
Snow Thrower, recoil starters, MTD . . . LG 860–861
Snow Thrower, scraper bars . . . LG 847–849
Snow Thrower, scraper bars, Ariens . . . LG 847
Snow Thrower, scraper bars, Honda . . . LG 847
Snow Thrower, scraper bars, Jacobsen . . . LG 848
Snow Thrower, scraper bars, John Deere . . . LG 847–848
Snow Thrower, scraper bars, Simplicity . . . LG 849
Snow Thrower, scraper bars, Snapper . . . LG 849
Snow Thrower, scraper bars, Toro . . . LG 849
Snow Thrower, shave plates . . . LG 847–849
Snow Thrower, shave plates, Cub Cadet . . . LG 848
Snow Thrower, shave plates, MTD . . . LG 848–849
Snow Thrower, shear bolts . . . LG 852–853
Snow Thrower, shear bolts, Ariens . . . LG 852–853
Snow Thrower, shear bolts, Honda . . . LG 852–853
Snow Thrower, shear bolts, Husqvarna . . . LG 852–853
Snow Thrower, shear bolts, Jacobsen . . . LG 852–853
Snow Thrower, shear bolts, John Deere . . . LG 852–853
Snow Thrower, shear bolts, MTD . . . LG 852–853
Snow Thrower, shear bolts, Murray . . . LG 852–853
Snow Thrower, shear bolts, Noma . . . LG 852–853
Snow Thrower, shear bolts, Snapper . . . LG 852–853
Snow Thrower, shear bolts, Universal . . . LG 852–853
Snow Thrower, skids . . . LG 849–851
Snow Thrower, skids, Ariens . . . LG 850

2019 Alphabetical Index – EN

Snow Thrower, skids, Ariens . . . LG 850
Snow Thrower, skids, AYP . . . LG 850
Snow Thrower, skids, Honda . . . LG 850
Snow Thrower, skids, John Deere . . . LG 850
Snow Thrower, skids, MTD . . . LG 850
Snow Thrower, skids, Murray . . . LG 850
Snow Thrower, skids, Snapper . . . LG 850
Snow Thrower, skids, Toro . . . LG 851
Snow Thrower, skids, Universal . . . LG 849
Snow Thrower, starter handle, mitten grip . . . LG 851
Snow Thrower, starter key, MTD . . . LG 861
Snow Thrower, steering control cables . . . LG 701–720
Snow Thrower, steering control trigger, Cub Cadet . . . LG 856
Snow Thrower, steering control trigger, MTD . . . LG 856
Snow Thrower, vane, Toro . . . LG 851
Snow Thrower, wheel, Cub Cadet . . . LG 856
Snow Thrower, wheel, MTD . . . LG 856
Socket Set Screws Assortment . . . SFS 101
Solenoids . . . LG 729–730
Solo, bar & chain applications . . . FOR 84–87
Solo, sprocket applications . . . FOR 201
Solvent, cleaning . . . SFS 94
Spacers, spindles . . . LG 910
Spark Plug Boots . . . LG 787–788
Spark Plug Shorting Clip . . . LG 867
Spark Plug Terminals . . . LG 787–788
SPARK PLUGS . . . LG 864–867
Spark Tester . . . SFS 65
Spartan, blades . . . LG 557
Spill Pallets . . . SFS 89
Spill Platforms . . . SFS 89
Spindle Bolts . . . LG 910
Spindle Nuts . . . SFS 105
Spindle Seals . . . LG 910
Spindle Shafts . . . LG 906–910
Spindle Spacers . . . LG 910
SPINDLES . . . LG 869–910
Spindles, AMF . . . LG 869
Spindles, Ariens . . . LG 869
Spindles, AYP . . . LG 870–876
Spindles, Blade . . . LG 869–910
Spindles, Bobcat . . . LG 874–875
Spindles, Bunton . . . LG 874–875
Spindles, Bush Hog . . . LG 876–877
Spindles, Caroni . . . LG 877
Spindles, Cub Cadet . . . LG 878–883
Spindles, Dixie Chopper . . . LG 883
Spindles, Dixon . . . LG 883–884
Spindles, Excel . . . LG 884
Spindles, Exmark . . . LG 884–889
Spindles, Ferris . . . LG 889
Spindles, Gilson . . . LG 891
Spindles, Grasshopper . . . LG 890
Spindles, Gravely . . . LG 890–891
Spindles, Great Dane . . . LG 891
Spindles, Husqvarna . . . LG 870–876
Spindles, Hustler . . . LG 884
Spindles, John Deere . . . LG 891–893
Spindles, Lawn Chief . . . LG 869
Spindles, MTD . . . LG 893–901
Spindles, Murray . . . LG 902
Spindles, Noma . . . LG 869
Spindles, Roper . . . LG 903–904
Spindles, Scag . . . LG 903
Spindles, Sears . . . LG 903–904
Spindles, Toro . . . LG 905
Spindles, Wright Stander . . . LG 905
Splitters . . . OPE 38–47
Spray Carburetor Cleaner . . . SFS 93
Spray Starting Fluid . . . SFS 93–94
Spray, battery terminal cleaner . . . SFS 95
Spray, battery terminal protector . . . SFS 95
Spray, brake cleaner . . . SFS 94
SPRAYERS . . . LG 911–912
Spring Pins, assortment . . . SFS 102
Spring Pins, display pack . . . LG 801
SPRINGS . . . LG 913–914
Springs, recoil starters . . . LG 937
Sprocket, idler . . . LG 725
Sprocket, steel plate . . . LG 725
SPROCKETS – CHAIN SAW . . . FOR 180–210
ST120VX String Trimmer, 120v Professional Series™ . . . OPE 33
ST275 Trimmer Head . . . OPE 26
ST275 Trimmer/Edger . . . OPE 19
ST600 String Trimmer, Cordless Multi-Attachment . . . OPE 13
Stabilizer Arms . . . LG 793
Stabilizer, fuel . . . SFS 85
Stand, chain saw chain grinder . . . SFS 41
Stanley Hydraulic, bar & chain applications . . . FOR 87
STARTER PARTS . . . LG 926–936
STARTER ROPE . . . LG 937
Starter, center screws, Honda . . . LG 929
Starter, clutch, Briggs & Stratton . . . LG 929
Starter, cups, Honda . . . LG 929
Starter, dogs . . . LG 930–931
Starter, drives, electric starters . . . LG 926–928
Starter, handle, Briggs & Stratton . . . LG 929–930
Starter, handle, Honda . . . LG 930
Starter, handle, mitten grip snow thrower . . . LG 851
Starter, handle, Stihl . . . LG 931
Starter, handle, Tecumseh . . . LG 931
Starter, handles . . . LG 929–930
Starter, keys . . . LG 945–946
Starter, motors . . . LG 915–921
Starter, motors, Briggs & Stratton . . . LG 915–916
Starter, motors, Honda . . . LG 918
Starter, motors, Kawasaki . . . LG 917–918
Starter, motors, Kohler . . . LG 918–919
Starter, motors, MTD . . . LG 921
Starter, motors, Onan . . . LG 921
Starter, motors, Tecumseh . . . LG 922
Starter, pawl repair kits . . . LG 932
Starter, pawl retainers . . . LG 932
Starter, pawls & springs . . . LG 930–931
Starter, pawls & springs, Briggs & Stratton . . . LG 930–931
Starter, pawls & springs, Echo . . . LG 930–931
Starter, pawls & springs, Honda . . . LG 930–931
Starter, pawls & springs, Stihl . . . LG 930–931
Starter, pulleys, chain saws . . . LG 692
Starter, solenoids . . . LG 729–730
Starter, springs, chain saws . . . LG 693
Starter, switches . . . LG 942–945
STARTERS . . . LG 915–925
Starters, electric . . . LG 915–921
Starters, recoil . . . LG 922–925
Starting Fluid Spray . . . SFS 93–94
Steel Plate Sprockets . . . LG 725
Steering Arm, MTD . . . LG 939
Steering Gear Kit, Murray . . . LG 941
Steering Links . . . LG 939
STEERING PARTS . . . LG 938–941
Steering Pinion Gear, MTD . . . LG 941
Steering Sector Gear, AYP . . . LG 941
Steering Sector Gear, Husqvarna . . . LG 941
Steering Shaft . . . LG 940
Steering Shaft Support, AYP . . . LG 939
Steering Shaft Support, Husqvqrna . . . LG 939
Steering Shaft, AYP . . . LG 940
Steering Shaft, Husqvarna . . . LG 940
Steering Shaft, MTD . . . LG 940
Steering Wheel Adapter, AYP . . . LG 939–940
Steering Wheel Adapter, Husqvqrna . . . LG 939–940
Steiner, blades . . . LG 557–558
Stick Tool Cable, 120v Professional Series™ . . . OPE 36
Stihl, air filters . . . LG 213–216
Stihl, bar & chain applications . . . FOR 88–92
Stihl, belts . . . LG 320
Stihl, edger blades . . . LG 587
Stihl, fuel caps . . . LG 773
Stihl, ignition coils . . . LG 784–787
Stihl, recoil starter pulleys . . . LG 936
Stihl, recoil starter springs . . . LG 937
Stihl, sprocket applications . . . FOR 201–203
Stihl, starter handle . . . LG 931
Stihl, starter pawls & springs . . . LG 930–931
Stihl, trimmer & blower parts . . . LG 1024–1026
Stone Grinders, lawn mower blades . . . SFS 59–61
Stop Switches . . . LG 949
Storage Cabinets, flammable liquids . . . SFS 89–90
Straight Key, stock . . . LG 727
String Trimmer . . . OPE 19
Sulkies, lawn mower . . . SFS 77–78
Sun Joe, bar & chain applications . . . FOR 92–93
SuperTwist Magnum Gatorline™ for ST275 . . . OPE 27

Sutech, blades . . . LG 559
Swab, bead lube . . . SFS 68
Swisher, blades . . . LG 559
Swisher, semi, pneumatic flat-free wheel assemblies . . . LG 1044–1046
SWITCHES . . . LG 942–950
Switches, ignition . . . LG 942–945
Switches, interlock . . . LG 947–948
Switches, on/off . . . LG 949
Switches, PTO . . . LG 946–947
Switches, safety . . . LG 947–948
Switches, starter . . . LG 942–945
Switches, stop . . . LG 949
Synthetic 2-Cycle Oil, VP fuels . . . SFS 83

T

T-Handle Allen Wrench Set . . . SFS 66
Tachometer, wireless . . . SFS 67
Tanaka, bar & chain applications . . . FOR 93–95
Tanaka, edger blades . . . LG 588
Tanaka, fuel caps . . . LG 773
Tanaka, sprocket applications . . . FOR 203
Tanaka, trimmer & blower parts . . . LG 1026
Tanks, fuel . . . LG 770
Tapered Roller Bearings . . . LG 223
Tecumseh, air filters, foam . . . LG 219
Tecumseh, air filters, paper . . . LG 216–218
Tecumseh, carburetor diaphragms . . . LG 623
Tecumseh, carburetor float bowls . . . LG 625
Tecumseh, carburetor floats . . . LG 625
Tecumseh, carburetor inlet needle valves . . . LG 629
Tecumseh, carburetor kits . . . LG 608–609
Tecumseh, carburetor reference chart . . . LG 594–595
Tecumseh, carburetors . . . LG 598–601
Tecumseh, electric starter gears . . . LG 929
Tecumseh, gasket . . . LG 758–759
Tecumseh, gasket set . . . LG 758
Tecumseh, ignition coils . . . LG 784–787
Tecumseh, in-line fuel filters . . . LG 774–776
Tecumseh, muffler . . . LG 809–810
Tecumseh, oil filters . . . LG 814–819
Tecumseh, oil seal . . . LG 759
Tecumseh, points & condenser . . . LG 789
Tecumseh, primer bulbs . . . LG 630
Tecumseh, recoil starter pulleys . . . LG 936
Tecumseh, recoil starters . . . LG 922–925
Tecumseh, snow thrower 120V starters . . . LG 861
Tecumseh, snow thrower ignition key . . . LG 861
Tecumseh, starter handle . . . LG 931
Tecumseh, starter motors . . . LG 922
Tender, battery . . . LG 743
Tester, compression . . . SFS 65
Tester, spark . . . SFS 65
Thread locker, Permatex . . . SFS 96
Throttle Accessories, assortment . . . SFS 101
Throttle Cable Clips . . . LG 722
Throttle Cable Conduit Button . . . LG 721
Throttle Cable Inner Wire, roll . . . LG 721
Throttle Cable Outer Conduit, roll . . . LG 721
Throttle Cable Wire Bending Tool . . . LG 722
Throttle Cables . . . LG 701–720
Throttle Wire Swivel Stops . . . LG 722
Throttle Wire Z-Bender Tool . . . SFS 66
Tickets, service . . . SFS 21
Tie Rod Ends . . . LG 938–939
TILLER PARTS . . . LG 954
Tiller Tine Pins, assortment . . . SFS 102
Tiller Tines, Troy-Bilt . . . LG 954
Tillotson, carburetor . . . LG 595
Tillotson, carburetor inlet needle valves . . . LG 629
Tillotson, carburetor kits . . . LG 609–610
Tines, tiller . . . LG 954
Tire Chains . . . LG 965
Tire Changer . . . SFS 69
Tire Inflator, aerosol with hose . . . SFS 94
Tire Sealant, Slime® . . . SFS 98
Tire Tools . . . SFS 69
Tire Tubes . . . LG 956–957
Tires, agricultural lug tread . . . LG 958
Tires, All Trail II tread . . . LG 964
Tires, AT100 tread . . . LG 958
Tires, AT489 tread . . . LG 964
Tires, ATV knobby tread . . . LG 963
Tires, bar tread . . . LG 958
Tires, chevron bar tread . . . LG 958
Tires, chevron tread . . . LG 959
Tires, golf rib tread . . . LG 959
Tires, golf tread . . . LG 963
Tires, high speed trailer . . . LG 960
Tires, links golf cart tread . . . LG 963
Tires, magnum tread . . . LG 962
Tires, Polar Trac tread . . . LG 958
Tires, Power Trac tread . . . LG 958
Tires, saw tooth tread . . . LG 961
Tires, Scorpion tread . . . LG 963
Tires, smooth tread . . . LG 960
Tires, Snow Hog tread . . . LG 958
Tires, snow thrower tread . . . LG 958
Tires, solid foam flat-free . . . LG 964
Tires, straight rib tread . . . LG 960
Tires, stud tread . . . LG 957
Tires, Super Lug tread . . . LG 958
Tires, Super Turf tread . . . LG 962
Tires, Tital tread . . . LG 958
Tires, Tru Power tread . . . LG 958
TIRES, TUBES, & TIRE CHAINS . . . LG 955–965
Tires, Turf CTR tread . . . LG 963
Tires, Turf Master tread . . . LG 961
Tires, Turf Mate tread . . . LG 963
Tires, Turf Saver II tread . . . LG 960
Tires, Turf Saver tread . . . LG 959
Tires, Turf Smart tread . . . LG 962
Tires, turf tread . . . LG 959
Tires, wheelbarrow rib . . . LG 957
Tires, wrap . . . LG 964
Tires, X-Trac tread . . . LG 958
TK Carburetor Kits . . . LG 608
Tool Bag . . . OPE 23
Tools, shop . . . SFS 24–71
Top Link Pins . . . LG 794
Top Links . . . LG 794
Toro, air filters . . . LG 219–220
Toro, anti-scalp wheels/rollers . . . LG 1037–1042
Toro, bar & chain applications . . . FOR 95
Toro, bearings . . . LG 247
Toro, belts . . . LG 320–323
Toro, blades . . . LG 560–573
Toro, control cables . . . LG 719–720
Toro, electric PTO clutches . . . LG 733–741
Toro, fuel caps . . . LG 773
Toro, handle latch . . . LG 802
Toro, idler pulleys . . . LG 834
Toro, in-line fuel filters . . . LG 774–776
Toro, muffler . . . LG 810
Toro, on/off switches . . . LG 949
Toro, pneumatic wheel assemblies . . . LG 1044–1046
Toro, PTO switches . . . LG 946–947
Toro, safety switches . . . LG 947–948
Toro, semi-pneumatic flat-free wheel assemblies . . . LG 1044–1046
Toro, snow thrower paddles . . . LG 847
Toro, snow thrower scraper bars . . . LG 849
Toro, snow thrower skids . . . LG 851
Toro, snow thrower vane . . . LG 851
Toro, spindles . . . LG 905
Toro, stop switches . . . LG 949
Toro, wheels . . . LG 1029–1046
Torque Converter Parts . . . LG 675
Torsion Springs, assortment . . . SFS 104
Training Tools, chain saw chain . . . SFS 23
Treatments, engine . . . SFS 81
TRIMMER & BLOWER PARTS . . . LG 1016–1027
Trimmer & Blower Parts, Echo . . . LG 1016–1018
Trimmer & Blower Parts, Homelite . . . LG 1019
Trimmer & Blower Parts, Husqvarna . . . LG 1020
Trimmer & Blower Parts, Maruyama . . . LG 1020–1021
Trimmer & Blower Parts, McCulloch . . . LG 1021
Trimmer & Blower Parts, MTD . . . LG 1021–1022
Trimmer & Blower Parts, RedMax . . . LG 1022
Trimmer & Blower Parts, Ryan . . . LG 1022–1023
Trimmer & Blower Parts, Ryobi . . . LG 1022–1023
Trimmer & Blower Parts, Shindaiwa . . . LG 1023–1024
Trimmer & Blower Parts, Snapper . . . LG 1024

2019 Alphabetical Index – EN

Trimmer & Blower Parts, Stihl. . . . . LG 1024–1026
Trimmer & Blower Parts, Tanaka . . . . . LG 1026
Trimmer & Blower Parts, Weed Eater. . . . . LG 1027
Trimmer Edger Kit with Battery Pack . . . . . OPE 19
Trimmer Harness, universal . . . . . LG 1027
Trimmer Head for OPE . . . . . OPE 26
Trimmer Heads, 4" Heavy Duty Magnum Gatorhead™ . . . . . LG 989
Trimmer Heads, 6" Heavy Duty Magnum Gatorhead™ . . . . . LG 990
Trimmer Heads, application chart. . . . . LG 997–1013
Trimmer Heads, bump & feed . . . . . LG 985–994
Trimmer Heads, fixed line trimmer head . . . . . LG 996
Trimmer Heads, Gator® SpeedLoad™ . . . . . LG 968–978
Trimmer Heads, Jet Fit™ heads . . . . . LG 995
Trimmer Heads, Kwik Loader™ Jet-Fit Express head. . . . . LG 995
Trimmer Heads, Lightning Load™ trimmer head . . . . . LG 985
Trimmer Heads, manual feed . . . . . LG 995
Trimmer Heads, Pivotrim™ trimmer head . . . . . LG 996
Trimmer Heads, replacement for Stihl 25-2 Auto Cut . . . . . LG 988
Trimmer Heads, Speed-Feed™ trimmer head . . . . . LG 986–987
TRIMMER LINE & HEADS. . . . . LG 966–1015
Trimmer Line for ST275 Cordless String Trimmer . . . . . OPE 26
Trimmer Line, Biotrim™ . . . . . LG 978
Trimmer Line, cutter . . . . . LG 985
Trimmer Line, FlexiBlade™ . . . . . LG 984
Trimmer Line, Gator® SpeedLoad™. . . . . LG 973
Trimmer Line, Gatorline™ pre-cut lengths. . . . . LG 983
Trimmer Line, Oregon® Green . . . . . LG 982
Trimmer Line, Oregon® Red . . . . . LG 982
Trimmer Line, Platinum Gatorline™. . . . . LG 979
Trimmer Line, Red Round Gatorline™. . . . . LG 983
Trimmer Line, Round Gatorline™ . . . . . LG 981
Trimmer Line, Round Magnum Gatorline™. . . . . LG 980
Trimmer Line, Square Gatorline™. . . . . LG 981
Trimmer Line, Square Magnum Gatorline™ . . . . . LG 980
Trimmer Line, SuperTwist Magnum Gatorline™ . . . . . LG 979
Trimmer Strap, universal . . . . . LG 1027
Trimmer/Edger . . . . . OPE 19
Trimmer/Edger, ST275 Oregon® 40V MAX . . . . . OPE 19
Troy-Bilt, bar & chain applications . . . . . FOR 95–96
Troy-Bilt, belts . . . . . LG 324
Troy-Bilt, blades . . . . . LG 573–576
Troy-Bilt, edger blades. . . . . LG 588
Tubeless Tire Repair Kits. . . . . SFS 69
Tubeless Tire Valve Stems . . . . . LG 957
Tubes, tires . . . . . LG 956–957
Tygon® Fuel Line . . . . . LG 761

U

UNIVERSAL BLADES. . . . . LG 368
Universal Ignition Module . . . . . LG 789
Universal Semi-Pneumatic Wheels. . . . . LG 1029–1037
Universal Snow Thrower Shear Bolts. . . . . LG 852–853
Universal Snow Thrower Skids . . . . . LG 849
Universal Trimmer Harness . . . . . LG 1027
Universal Trimmer Strap. . . . . LG 1027

V

Valve GrindingTools. . . . . SFS 66
Valve Refacer . . . . . SFS 67
Valve Spring Compressor . . . . . SFS 66
Valve Stem Fishing Tool . . . . . SFS 68
Valve Stem Repair Tool, 4-way . . . . . SFS 68
Valve Stems, tubeless tires . . . . . LG 957
Valve, oil drain . . . . . LG 760
Vise, loggers filing . . . . . SFS 14
Visor, safety. . . . . SFS 120
Voltage Regulators . . . . . LG 731–732
VP Fuels, ethanol free fuel. . . . . SFS 79–81
VP Fuels, fix-it fuel . . . . . SFS 81
VP Fuels, power spout . . . . . SFS 81
VP Fuels, siphon pump. . . . . SFS 81

W

Walbro Carburetor Kits. . . . . LG 608–614
Walbro Carburetors . . . . . LG 595
Walbro Primer Bulbs . . . . . LG 631–632
Walker, belts . . . . . LG 325
Walker, blade adaptors. . . . . LG 342
Walker, blades . . . . . LG 576
Walker, semi-pneumatic flat-free wheel assemblies. . . . . LG 1044–1046
Warner, electric PTO clutches . . . . . LG 733–741
Washers . . . . . SFS 106
Washers, cupped steel . . . . . SFS 106
Washers, fiber . . . . . SFS 106
Washers, flat steel . . . . . SFS 106
Wedges, felling . . . . . SFS 14
Weed Eater Edger Blades . . . . . LG 588
Weed Eater Trimmer & Blower Parts . . . . . LG 1027
Welch Plugs. . . . . LG 632–633
Wen / Wagner, bar & chain applications . . . . . FOR 96
Western Auto, sprocket applications . . . . . FOR 203
Wheel Bearings. . . . . LG 223–224
Wheel Horse, air filters. . . . . LG 220
Wheel Horse, anti-scalp wheels/rollers . . . . . LG 1037–1042
Wheel Horse, muffler . . . . . LG 810
Wheel Motors, hydrostatic drive . . . . . LG 697
Wheelbarrow Wheels . . . . . LG 1047
WHEELS . . . . . LG 1029–1047
Wheels, AMF . . . . . LG 1029–1046
Wheels, AYP. . . . . LG 1029–1046
Wheels, Bobcat . . . . . LG 1029–1046
Wheels, Bunton . . . . . LG 1029–1046
Wheels, Honda . . . . . LG 1029–1046
Wheels, Husqvarna. . . . . LG 1029–1046
Wheels, John Deere . . . . . LG 1029–1046
Wheels, Lawn-Boy . . . . . LG 1029–1046
Wheels, MTD . . . . . LG 1029–1046
Wheels, Murray. . . . . LG 1029–1046
Wheels, Noma . . . . . LG 1029–1046
Wheels, saw chain grinders . . . . . SFS 40–41
Wheels, Sears. . . . . LG 1029–1046
Wheels, Sensation . . . . . LG 1029–1046
Wheels, Snapper . . . . . LG 1029–1046
Wheels, Toro . . . . . LG 1029–1046
Wheels, universal semi-pneumatic. . . . . LG 1029–1037
Wheels, wheel barrows . . . . . LG 1047
Wire Ties. . . . . LG 722
Wire, primary . . . . . LG 742
Wireless Tachometer. . . . . SFS 67
Wisconsin Robin, air filters . . . . . LG 220–222
Wisconsin, air filters . . . . . LG 220
Wisconsin, control cables . . . . . LG 720
Wisconsin, muffler . . . . . LG 810
Woodruff Keys, display pack . . . . . LG 801
Woods, belts . . . . . LG 325–330
Woods, blades . . . . . LG 577–579
Woods, electric PTO clutches . . . . . LG 733–741
Work Light, WL275 Oregon® 40V MAX Cordless. . . . . OPE 22
Worx, bar & chain applications . . . . . FOR 97
Wright Stander, belts. . . . . LG 330–331
Wright Stander, blades. . . . . LG 579–582
Wright Stander, electric PTO clutches . . . . . LG 733–741
Wright Stander, semi-pneumatic flat-free wheel assemblies . . . . . LG 1044–1046
Wright Stander, spindles. . . . . LG 905
Wypall Pre-Moistened Hand Towellet . . . . . SFS 68

Y

Yamakoyo Carburetors. . . . . LG 601
Yazoo, bearings. . . . . LG 248
Yazoo, belts . . . . . LG 297
Yoke, adjustable . . . . . LG 805

Z

Zama, carburetor Kits . . . . . LG 614–621
Zama, carburetors . . . . . LG 595
Zama, primer bulbs. . . . . LG 632
Zipper, blades. . . . . LG 583
Zone Safety Cables. . . . . LG 701–720

The Oregon® Customer Satisfaction Policy

Oregon Limited Warranty – Replacement Parts*
At Oregon, our goal is help you get the job done right with outstanding products that perform to your full satisfaction.
Oregon | Blount, Inc. warrants its products to be free from defects in materials and workmanship for as long as it is owned by the original retail purchaser.

If for any reason, you are not satisfied with our products, please let us know. Our contact information is listed below.

LIABILITY UNDER THIS WARRANTY IS LIMITED TO REPLACEMENT PARTS AT THE OPTION OF YOUR OREGON DISTRIBUTOR AND OREGON. PLEASE CONTACT YOUR OREGON DISTRIBUTOR OR US DIRECTLY. OREGON PRODUCTS ARE NOT WARRANTED AGAINST NORMAL WEAR AND TEAR, USER ABUSE, IMPROPER MAINTENANCE OR IMPROPER REPAIR.

REPLACEMENT OF DEFECTIVE PRODUCT IS THE EXCLUSIVE REMEDY UNDER THIS WARRANTY AND ANY APPLICABLE IMPLIED WARRANTY. THE REPLACEMENT WILL BE UNDERTAKEN AS SOON AS REASONABLY POSSIBLE AFTER RECEIPT OF THE DEFECTIVE PRODUCT. TO THE EXTENT PERMITTED BY LAW, ANY IMPLIED WARRANTY OF MERCHANTABILITY OR FITNESS FOR A PARTICULAR PURPOSE APPLICABLE TO THIS PRODUCT IS LIMITED TO THE DURATION AND SCOPE OF THIS EXPRESS WARRANTY. OREGON SHALL NOT BE LIABLE FOR ANY CONSEQUENTIAL OR INCIDENTAL DAMAGES. SOME STATES DO NOT ALLOW LIMITATIONS ON HOW LONG AN IMPLIED WARRANTY LASTS OR DO NOT ALLOW THE EXCLUSION OF CONSEQUENTIAL DAMAGES, SO THE ABOVE LIMITATION OR EXCLUSION MAY NOT APPLY TO YOU. THIS WARRANTY GIVES THE ORIGINAL OWNER SPECIFIC LEGAL RIGHTS, AND YOU MAY ALSO HAVE OTHER RIGHTS WHICH VARY FROM STATE TO STATE.

You Have Additional OEM Warranty Protection
If an original equipment manufacturer (OEM) declines to honor their written warranty solely because you purchased and used Oregon replacement parts in the OEMs product, please read on.

Oregon will allow you to substitute the rights and remedies provided to you under the OEMs written warranty for this express limited warranty. Here's how it works: Send us a written confirmation — from the OEM — that states that the OEM has refused to honor the OEM written warranty solely because you purchased and used Oregon replacement parts in the OEMs product. We are here to help.

Oregon 120V Professional Series 2-Year Limited Warranty
Oregon offers the original purchaser a two (2) year limited warranty for products for which they will be the end user, and a ninety (90) day limited warranty for products purchased to rent to other end users. The Oregon 120V Professional Series limited warranty covers the following products: BL120VX-NA Backpack Blower, ST120VX-NA String Trimmer, EHT120VX-NA Hedge Trimmer, EG120VX-NA Edger, BX975-UV Battery, BX650-UV Battery, C1600-NA Charger, CD01120VX-NA Battery-to-Tool Cable, BPBX0R01-UV Backpack, and BPBXSY01-UV Backpack.

Cordless Tool System 3-Year Limited Warranty †
At Oregon, we're committed to building better cordless tools to help you do the best job possible. Our commitment is backed by a three-year limited warranty for all Oregon Cordless Tools and Chargers, and a two-year limited warranty for all Oregon Cordless Battery Packs.

Oregon CS1500 Chain Saw 2-Year Limited Warranty
Blount, Inc. warrants all Oregon CS1500 Chain Saws for a period of two (2) years for personal use. This warranty is one (1) year for units that have been rented, or used for commercial or industrial use. During the warranty period, Blount will replace or, at its option, repair for the original purchaser only, free of charge, any product or part which is found upon examination by Blount to be defective in material and/or workmanship. The purchaser shall be responsible for all transportation charges and any cost of removing any part submitted for replacement under this warranty.

Oregon Log Splitter Limited Warranty
Blount, Inc. warrants all Oregon branded Log Splitters in the following manner: All steel components are warranted for (3) years. 22-ton engines (as rated by the manufacturer) are warranted for (2) years. 28-ton engines (as rated by manufacturer) are warranted for (3) years. Hydraulics are warranted for (1) year.

You Can Reach Us Several Ways
We're here to take your calls between 7:30 a.m. and 4:00 p.m. (Pacific Time) Monday through Friday.
Our phone number is 800-223-5168. Or, write to us at: Technical Services Department, Oregon, Blount, Inc., P.O. Box 22127, Portland, Oregon 97269-2127. You can also visit our website at OregonProducts.com. Use the "Technical Information" or "Technical Services" links.

* In this catalog, the Oregon Limited Warranty covers all Oregon products except Oregon Cordless Tool System products, Oregon 120V Professional Series products, Oregon Log Splitter products, and the Oregon CS1500 chain saw product. Product exceptions are warranted under separate warranties.
† Warranty is 2 years if product is used for commercial purposes.

© 2019 Oregon | Blount, Inc. This catalog, photographs, images, and content are the exclusive copyrighted work of Blount, Inc. and may not be duplicated in whole or in part without the company's express written authorization.

OregonProducts.com

(800) 223-5168

TechnicalServices@OregonProducts.com

Oregon® | Blount, Inc.
4909 SE International Way
Portland, Oregon 97222

© Copyright 2019, Blount Inc.
OEP-FOR-0 • Rev AQ • 09/18
Printed in USA